FITOK

Full Technical Catalog
For Medium & High Pressure

FITOK Full Technical Catalog

For Medium & High Pressure

www.fitok.com

Fittings



Tubing



Quick Couplings



Line Filters



FITOK

Valves



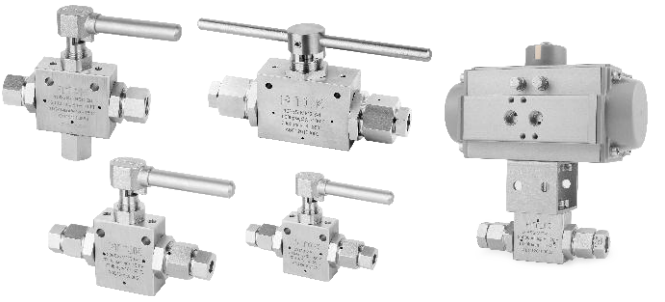







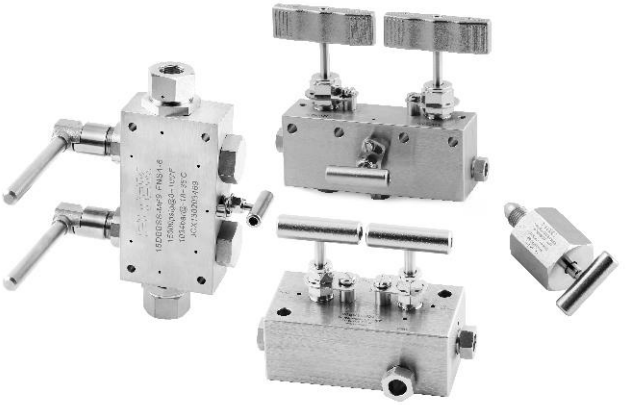



Sour Service Products



Subsea Valves



Tools



A Fittings

Technical Information	A-02
20D Series Tube Fittings	A-10
20M Series Medium Pressure Fittings	A-22
60H Series High Pressure Fittings	A-30
PMH Series Pipe Fittings	A-37
AMH Series Adapter Fittings	A-70
Tools and Installation Instructions	A-107

B Tubing

T15A Series Tubing	B-05
T20D Series Tubing	B-07
T20M Series Tubing	B-09
T60H Series Tubing	B-12

C Quick Couplings

Quick Couplings	C-02

D Line Filters

Line Filters	D-02

E Valves

Ball Valves and Pneumatic Ball Valves E-02

Needle Valves and Pneumatic Needle Valves E-11

Check Valves E-51

Metering Valves E-64

Relief Valves E-69

Bleed Valves and Block & Bleed Valves E-81

F Sour Service Products

Sour Service Products F-02

G Subsea Valves

Subsea Valves G-02

H Part Number Crossover Charts

Part Number Crossover Charts H-02

Fittings

Technical Information A-02

20D Series Tube Fittings  A-10

20M Series Medium Pressure Fittings  A-21

60H Series High Pressure Fittings  A-30

PMH Series Pipe Fittings  A-37

AMH Series Adapter Fittings  A-70

Tools and Installation Instructions A-107

Connection Information

20D Series Tube Fitting Connections

Dimensions of Female 20D Series Connections (DFF)

Tube O.D. in.(mm)	Connection	Dimensions, in. (mm)			
		P	C	D	E
1/8 (3.18)	DFF2	3/8-24	0.63 (15.9)	0.13 (3.2)	0.09 (2.4)
1/4 (6.35)	DFF4	1/2-20	0.85 (21.7)	0.25 (6.4)	0.19 (4.8)
3/8 (9.53)	DFF6	5/8-18	0.89 (22.5)	0.38 (9.5)	0.25 (6.4)
1/2 (12.7)	DFF8	13/16-16	0.96 (24.4)	0.50 (12.7)	0.37 (9.5)
9/16 (14.3)	DFF9	15/16-14	1.20 (30.6)	0.56 (14.3)	0.41 (10.4)
3/4 (19.1)	DFF12	1 1/4-12	1.54 (39.2)	0.75 (19.1)	0.56 (14.2)
1 (25.4)	DFF16	1 5/8-16	2.03 (51.6)	1.00 (25.4)	0.69 (17.5)

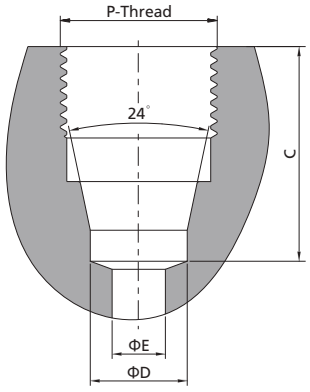

Notes: 1. All dimensions are shown for reference only and should not be considered as actual machining dimensions.
2. All threads are manufactured to class 2A or 2B fit.

Types of 20D Series Connections

a. Female 20D Series (DFF)

T15A or T20D Series Tubing

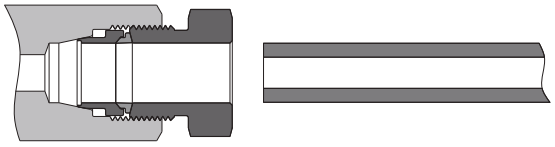

b. Female 20D Series (Without Double Ferrules and Nut)

20D Series Tube Stub with Double Ferrules and Nut (DFT)

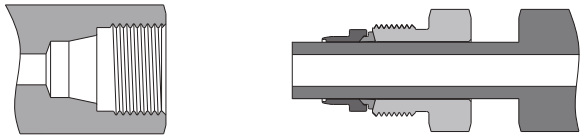

c. Female 20D Series (Without Double Ferrules and Nut) (DFF)

Male 20D Series (One-Piece) (DFM)

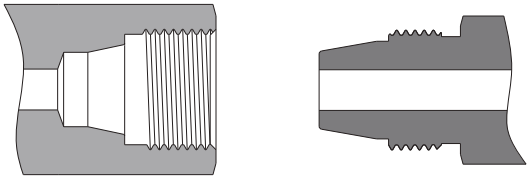

d. Female 20D Series (Without Double Ferrules and Nut) (DFF)

Male 20D Series (Two-Piece) (DCP)

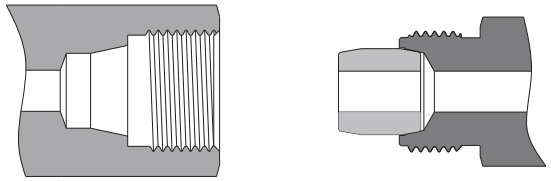

20M Series Medium Pressure Coned and Threaded Connections

Dimensions of Female Medium Pressure Connections (MF)

Tube O.D. in. (mm)	Connection	Dimensions, in. (mm)				
		P	B	C	D	E
1/4 (6.35)	MF4	7/16-20	0.29 (7.3)	0.50 (12.7)	0.19 (4.8)	0.11 (2.8)
3/8 (9.53)	MF6	9/16-18	0.39 (10.0)	0.63 (16.0)	0.31 (7.9)	0.20 (5.2)
9/16 (14.3)	MF9	13/16-16	0.44 (11.2)	0.75 (19.1)	0.50 (12.7)	0.31 (7.9)
3/4 (19.1)	MF12	3/4-14 NPSM	0.51 (13.0)	0.94 (23.9)	0.63 (15.9)	0.44 (11.1)
1 (25.4)	MF16	1 3/8-12	0.83 (21.0)	1.31 (33.3)	0.88 (22.4)	0.56 (14.3)
1 1/2 (38.1)	MF24	1 7/8-12	1.00 (25.4)	1.59 (40.5)	1.38 (35.0)	0.94 (23.8)

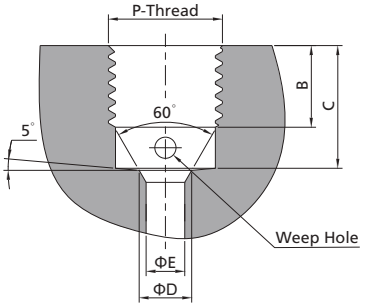

Dimensions of Medium Pressure Coned and Threaded Tubing Connections

Tube O.D. x I.D. in.	Connection	Dimensions, in. (mm)		
		T (Left Hand)	D	L
1/4 x 0.109	MF4	1/4-28	0.14 (3.6)	0.34 (8.7)
3/8 x 0.203	MF6	3/8-24	0.25 (6.4)	0.44 (11.1)
9/16 x 0.312	MF9	9/16-18	0.41 (10.3)	0.50 (12.7)
3/4 x 0.438	MF12	3/4-16	0.56 (14.3)	0.63 (15.9)
1 x 0.562	MF16	1-14	0.72 (18.3)	0.78 (19.8)
1 1/2 x 0.937	MF24	1 1/2-12	1.06 (27.0)	1.00 (25.4)

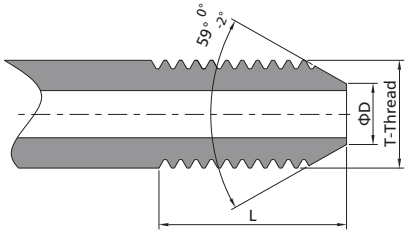

Notes: 1. All dimensions are shown for reference only and should not be considered as actual machining dimensions.
2. All threads are manufactured to class 2A or 2B fit.

Types of Medium Pressure Connections

a. Female Medium Pressure (MF)

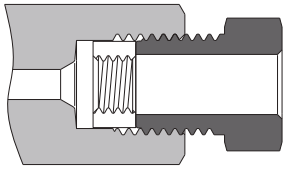

T20M Series Coned and Threaded Tubing



b. Female Medium Pressure (MF)

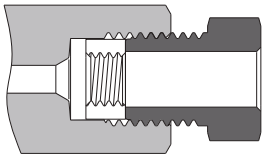

Medium Pressure Coned and Threaded Nipples (MCT)

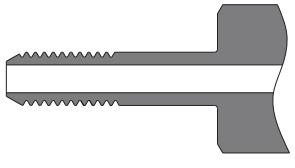

c. Female Medium Pressure (Without Collar and Gland) (MF)

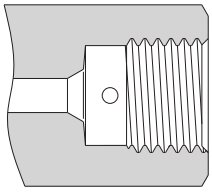

Male Medium Pressure (One-Piece) (MM)

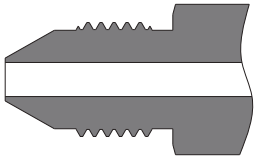

d. Female Medium Pressure (Without Collar and Gland) (MF)

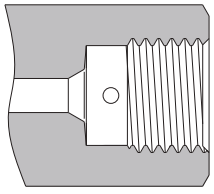

Male Medium Pressure (Two-Piece) (MCP)

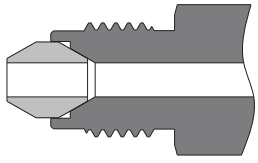

60H Series High Pressure Coned and Threaded Connections

Dimensions of Female High Pressure Connections (HF)

Tube O.D. in.(mm)	Connection	Dimensions, in. (mm)				
		P	B	C	D	E
1/4 (6.35)	HF4	9/16-18	0.39 (9.8)	0.45 (11.4)	0.17 (4.3)	0.09 (2.4)
3/8 (9.53)	HF6	3/4-16	0.54 (13.6)	0.64 (16.3)	0.26 (6.6)	0.13 (3.2)
9/16 (14.3)	HF9	1 1/8-12	0.63 (16.0)	0.75 (19.1)	0.38 (9.7)	0.19 (4.8)

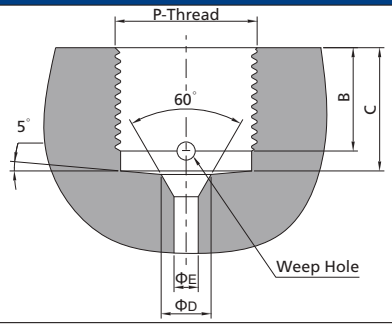

Dimensions of High Pressure Coned and Threaded Tubing Connections

Tube O.D. x I.D. in.	Connection	Dimensions, in. (mm)		
		T (Left Hand)	D	L
1/4 x 0.083	HF4	1/4-28	0.13 (3.2)	0.56 (14.3)
3/8 x 0.125	HF6	3/8-24	0.22 (5.6)	0.75 (19.1)
9/16 x 0.188	HF9	9/16-18	0.28 (7.1)	0.94 (23.8)

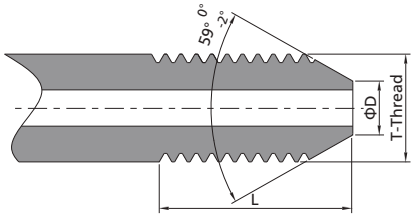

Notes: 1. All dimensions are shown for reference only and should not be considered as actual machining dimensions.
2. All threads are manufactured to class 2A or 2B fit.
3. API 6A, Specification for Wellhead and Christmas Tree Equipment, references high pressure coned and threaded fittings, and specifically outlines the dimensions for 9/16 inch fittings. FITOK 9/16 inch high pressure coned and threaded connections comply with the mechanical sealing dimensions called out in this specification. No other sizes or styles of cone and thread fittings or tubing are referenced in API 6A.

Types of High Pressure Connections

a. Female High Pressure (HF) T60H Series Coned and Threaded Tubing

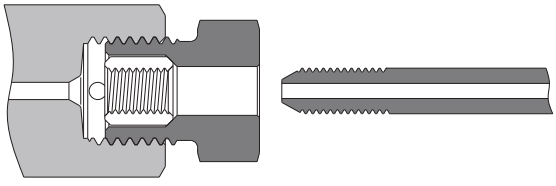

b. Female High Pressure (HF) High Pressure Coned and Threaded Nipples (HCT)

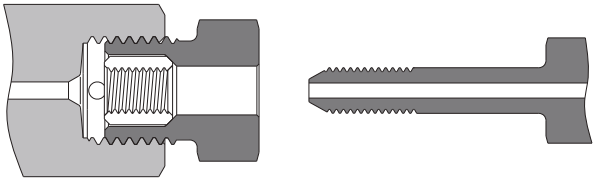

c. Female High Pressure (Without Collar and Gland) (HF) Male High Pressure (One-Piece) (HM)

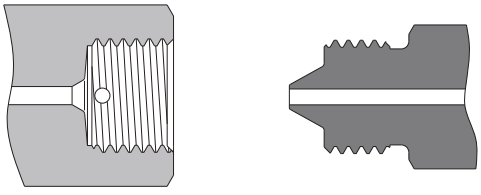

d. Female High Pressure (Without Collar and Gland) (HF) Male High Pressure (Two-Piece) (HCP)

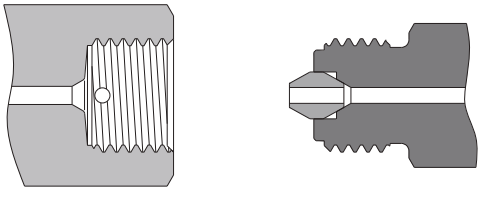

Thread Ends

Thread Specifications

Connection Type	Designator	Thread Type	Thread Specification
Male NPT	NS	NPT	ASME B1.20.1, SAE AS71051
Female NPT	FNS		
Male ISO Tapered Thread	RT	ISO Tapered	ISO 7-1, BS EN 10226-1, DIN EN 10226-1, JIS B0203
Female ISO Tapered Thread	FRT		
Male JIC	JM	SAE/MS	ASME B1.1
Female JIC	JF		
Male SAE O-Ring	SH		
Female SAE O-Ring	US		
Male ISO Parallel Thread	HBP	ISO Parallel	ISO 228-1, DIN ISO 228-1, JIS B0202, BS2779
Female ISO Parallel Thread	SBP, HSBP		

Types of Thread Ends

Male NPT (NS)

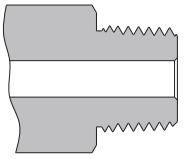

Female NPT (FNS)

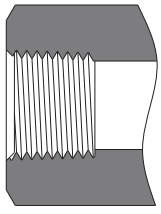

- ☐ 60° thread angle
- ☐ Pitch measured in inch
- ☐ Truncation of roots and crests is flat
- ☐ Taper 1:16
- ☐ Type of sealing: thread sealant

Male ISO Tapered Thread (RT)

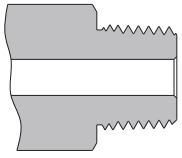

Female ISO Tapered Thread (FRT)

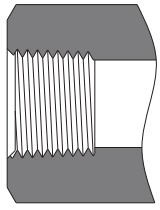

- ☐ 55° thread angle
- ☐ Pitch measured in inch
- ☐ Truncation of roots and crests is rounded
- ☐ Taper 1:16
- ☐ Type of sealing: thread sealant

Male SAE O-Ring (SH)

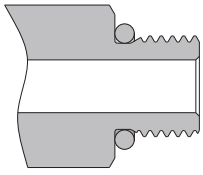

Female SAE O-Ring (US)

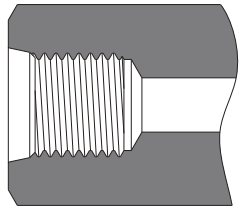

- ☐ 60° thread angle
- ☐ Pitch measured in inch
- ☐ Truncation of roots and crests is flat
- ☐ SH complies with SAE J1926-2, ISO 11926-2
  US complies with SAE J1926-1JSO 11926-1

Male JIC (JM)

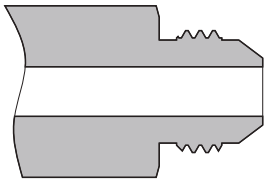

Female JIC (JF)

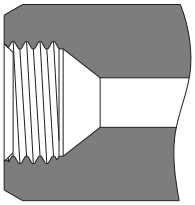

- ☐ 60° thread angle
- ☐ Pitch measured in inch
- ☐ Truncation of roots and crests is flat
- ☐ 74° coned connections

Male Type "M" (TM)

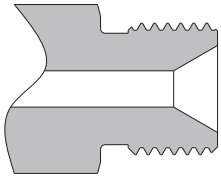

Type "M" Swivel Hose Fitting

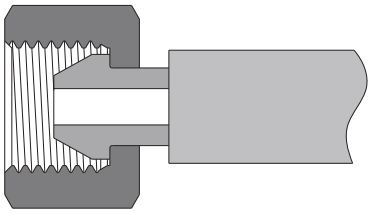

- ☐ 60° thread angle
- ☐ Pitch measured in inch
- ☐ Truncation of root and crest is flat
- ☐ 60° coned connections

Male ISO Parallel Thread (HBP)

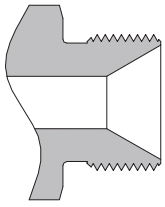

Female ISO Parallel Thread (SBP, HSBP)

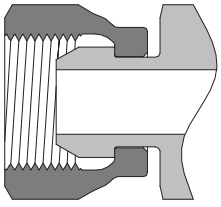

SBP

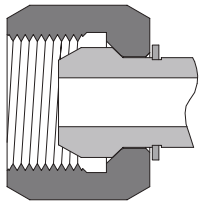

HSBP

- ☐ 55° thread angle
- ☐ Pitch measured in inch
- ☐ Truncation of roots and crests is round
- ☐ 60° coned connections

Dimensions of Thread Ends

Male JIC (JM)

Description	Connection	Dimensions, in. (mm)				
		P	B	C	D	E
1/4" JIC	JM4	7/16-20	0.20 (5.1)	0.55 (14.0)	0.36 (9.2)	0.19 (4.9)
3/8" JIC	JM6	9/16-18	0.20 (5.2)	0.56 (14.1)	0.48 (12.1)	0.32 (8.1)
1/2" JIC	JM8	3/4-16	0.26 (6.6)	0.66 (16.7)	0.65 (16.6)	0.43 (10.8)
5/8" JIC	JM10	7/8-14	0.28 (7.0)	0.76 (19.3)	0.77 (19.5)	0.54 (13.7)
3/4" JIC	JM12	1 1/16-12	0.32 (8.2)	0.86 (21.9)	0.94 (23.9)	0.67 (16.9)
1" JIC	JM16	1 5/16-12	0.32 (8.2)	0.91 (23.1)	0.19 (30.2)	0.91 (23.2)

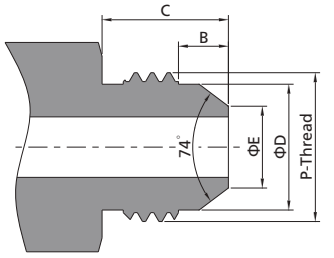

Female JIC (JF)

Description	Connection	Dimensions, in. (mm)		
		P	B	C
1/4" JIC	JF4	7/16-20	0.28 (7.1)	0.33 (8.3)
3/8" JIC	JF6	9/16-18	0.29 (7.4)	0.34 (8.7)
1/2" JIC	JF8	3/4-16	0.31 (7.9)	0.37 (9.5)
5/8" JIC	JF10	7/8-14	0.40 (10.2)	0.47 (11.9)
3/4" JIC	JF12	1 1/16-12	0.42 (10.7)	0.50 (12.7)
1" JIC	JF16	1 5/16-12	0.48 (12.3)	0.56 (14.3)

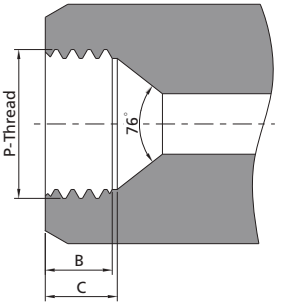

Male Type "M" (TM)

Connection	Dimensions, in. (mm)		
	P	B	E
TM9	9/16-18	0.50 (12.7)	0.09 (2.4)
TM12	3/4-16	0.63 (16.0)	0.29 (7.4)
TM14	7/8-14	0.76 (19.2)	0.15 (3.8)
TM16	1-12	0.64 (16.3)	0.39 (10.0)
TM21	1 5/16-12	0.62 (15.7)	0.69 (17.5)

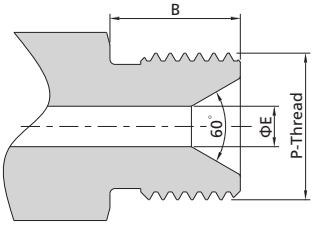

Male ISO Parallel Thread (HBP)

Connection	Dimensions, in. (mm)		
	P	B	E
HBP4	G1/4A	0.43 (11.0)	0.15 (3.8)
HBP6	G3/8A	0.47 (12.0)	0.25 (6.4)
HBP8	G1/2A	0.55 (14.0)	0.37 (9.5)
HBP12	G3/4A	0.63 (16.0)	0.50 (12.7)
HBP16	G1A	0.75 (19.0)	0.63 (15.9)

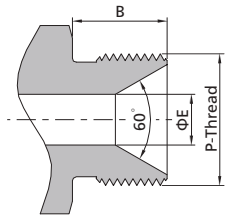

Female ISO Parallel Thread (SBP)

Connection	Dimensions, in. (mm)		
	P	B	E
SBP4	G1/4	0.18 (4.5)	0.19 (4.7)
SBP6	G3/8	0.25 (6.3)	0.31 (7.9)
SBP8	G1/2	0.28 (7.0)	0.44 (11.1)
SBP12	G3/4	0.35 (9.0)	0.66 (16.7)
SBP16	G1	0.43 (10.8)	0.87 (22.2)

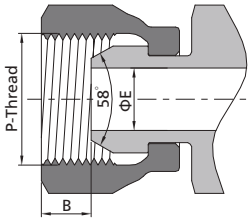

Female ISO Parallel Thread (HSBP)

Connection	Dimensions, in. (mm)		
	P	B	E
HSBP4	G1/4	0.18 (4.5)	0.15 (3.8)
HSBP6	G3/8	0.25 (6.3)	0.24 (6.0)
HSBP8	G1/2	0.28 (7.0)	0.31 (8.0)
HSBP12	G3/4	0.35 (9.0)	0.43 (11.0)
HSBP16	G1	0.43 (10.8)	0.55 (14.0)

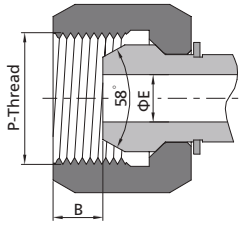

Notes: 1. All dimensions are shown for reference only and should not be considered as actual machining dimensions.
2. All threads, except ISO parallel threads, are manufactured to a class 2A or 2B fit.

Working Pressure vs. Bend Radius Curve

T20D、T20M and T60H Series Tubing

(316/316L SS)

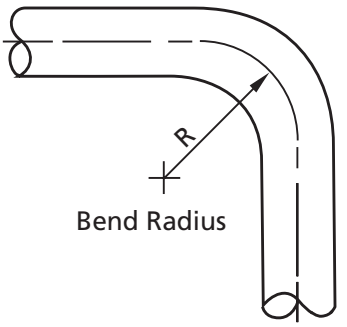

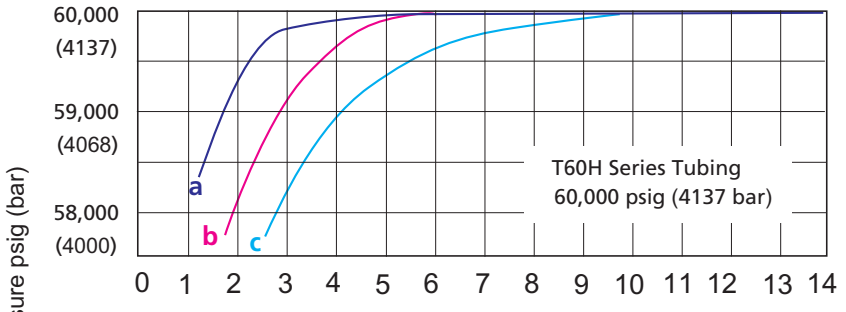

T60H Series Tubing
60,000 psig (4137 bar)

	Tube O.D. x I.D. in.	R (min.) in. (mm)
a	1/4 x 0.083	1.25 (31.8)
b	3/8 x 0.125	1.75 (44.5)
c	9/16 x 0.188	2.63 (66.7)

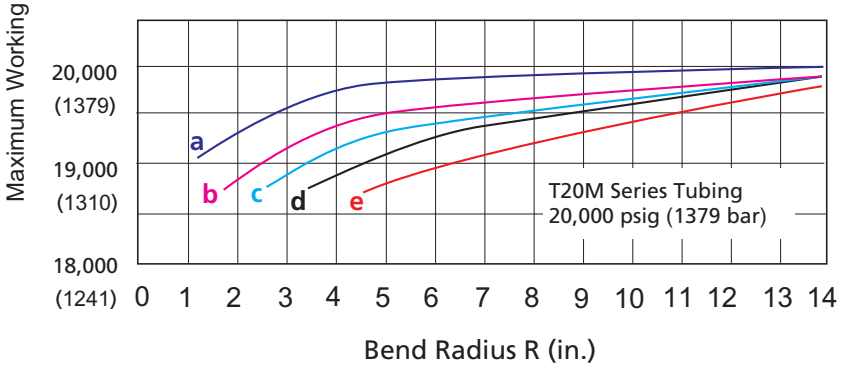

T20M Series Tubing
20,000 psig (1379 bar)

	Tube O.D. x I.D. in.	R (min.) in. (mm)
a	1/4 x 0.109	1.25 (31.8)
b	3/8 x 0.203	1.75 (44.5)
c	9/16 x 0.312	2.63 (66.7)
d	3/4 x 0.438	3.50 (88.9)
e	1 x 0.562	4.63 (117.5)

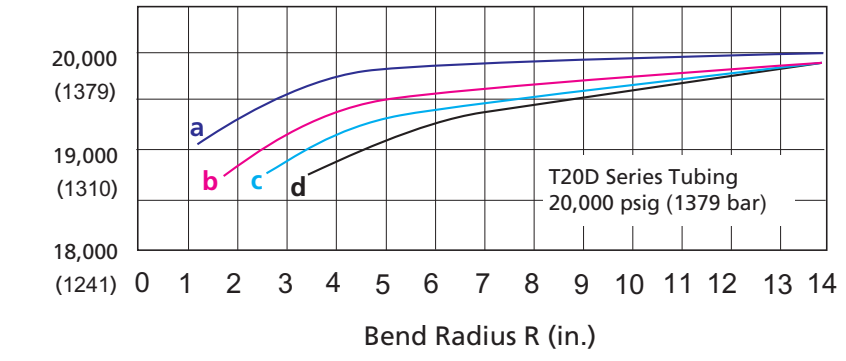

T20D Series Tubing
20,000 psig (1379 bar)

	Tube O.D. x W.T. in.	R (min.) in. (mm)
a	1/4 x 0.065	1.25 (31.8)
b	3/8 x 0.083	1.75 (44.5)
c	1/2 x 0.109	2.63 (66.7)
d	3/4 x 0.165	3.50 (88.9)

20D Series Tube Fittings

20,000 psig (1379 bar)



Contents

Nuts - N

A-13

Front Ferrules - FF

A-13

Rear Ferrules - RF

A-13

Nut-Ferrule Sets - NFS

A-13

Ferrule Sets - FRS

A-13

Plugs - DTP

A-14

Caps - DTC
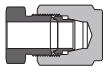
A-14

Unions - DU
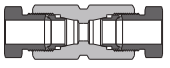
A-14

Reducing Unions - DU
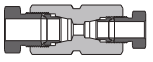
A-15

Bulkhead Unions - DBU
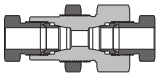
A-15

Male Connectors - DCM
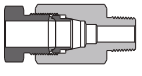
A-16

Female Connectors - DCF
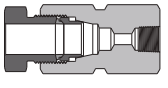
A-17

Union Elbows - DLU
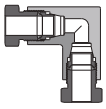
A-17

Union Reducing Elbows - DLU
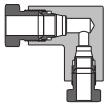
A-17

Male Elbows - DLM
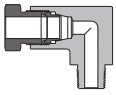
A-18

Union Tees - DT
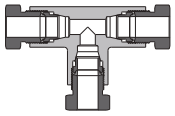
A-18

Male Branch Tees - DT
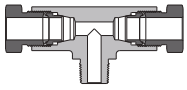
A-19

Union Crosses - DX
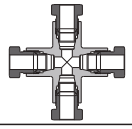
A-19

Reducers - DR
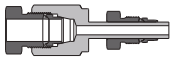
A-20

Port Connectors - DP
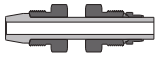
A-20

Adapters - DAM
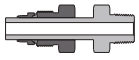
A-20

Installation Instructions A-110

Connection Information A-02

Ordering Number Description A-21

Features

◎ Working pressure up to 20,000 psig (1379 bar)
◎ Easy and quick connection to T15A, T20D and T20M series tubing, tubing sizes available in 1/8", 1/4", 3/8", 1/2", 9/16", 3/4" and 1"
◎ High tensile 316 stainless steel material
◎ Nut threads coated with molybdenum disulfide-based lubricant to minimize the friction
◎ Long tube-support area to improve vibration resistance and line loads
◎ Every fitting marked with size, material and trace ID
◎ EC-79 type approval for 70 MPa hydrogen system application

Standard Materials of Construction

Component	Material
Body, ferrules	*316 stainless steel*
Nut	316 stainless steel

Wetted components listed in italics.

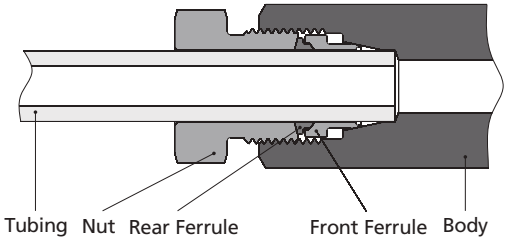

Working Pressure

◎ Working pressure is determined by the lowest working pressure of the ends.

Tube Ends

The working pressure of tube ends at ambient temperature is determined by the working pressure of the tubing used. For details, please refer to **"Working Pressure at Ambient Temperature"** on B-06 and B-08.
CAUTION: 20D Series Tube Fittings are applicable for use with T20M Series Tubing. But the match is not the best choice. 20D Series Tube Fittings are best match with T20D Series Tubing, which is recommended.

Male SAE O-Ring Ends

Working pressure of male SAE O-ring end connections listed in this catalog is 10,000 psig (690 bar).

NPT Ends

NPT Size in.	Working Pressure psig (bar)
1/8	15,000 (1,034)
1/4	
3/8	
1/2	
3/4	10,000 (690)
1	

T20D Series Tubing

Working pressures are calculated in accordance with ASME B31.3 Chapter IX High Pressure Piping.

Tube O.D. in.	Wall Thickness in.	Working Pressure psig (bar)
1/4	0.065	20,000 (1,379)
3/8	0.083	
1/2	0.109	
3/4	0.165	
1	0.172	15,000 (1,034)

Working Temperature

Connection Type	Working Temperature Range, °F (°C)
Tube Ends	-325 to 800 (-198 to 427)
Male SAE O-Ring Ends	0 to 400 (-17.8 to 204) ①
NPT Ends	-325 to 400 (-198 to 204) ②③

① The ends are supplied with a fluorocarbon FKM O-ring as standard, other materials of O-rings available.
② Always use proper thread sealants on tapered pipe threads.
③ The data are based on the working temperature range of the thread sealants. For the working temperature above 400°F (204°C), please contact FITOK Group or our authorized distributors.

Ordering Information and Dimensions

Dimensions are for reference only and are subject to change.

Nuts

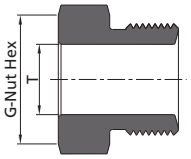

Tube		
T - Tube O.D. in.	Ordering Number	Dimensions,in. (mm)
		G
1/8	SS-N-DFF2	0.37 (9.5)
1/4	SS-N-DFF4	0.63 (15.9)
3/8	SS-N-DFF6	0.75 (19.1)
1/2	SS-N-DFF8	0.94 (23.8)
9/16	SS-N-DFF9	1.06 (27.0)
3/4	SS-N-DFF12	1.38 (34.9)
1	SS-N-DFF16	1.88 (47.6)

Front Ferrules

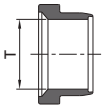

Tube	
T - Tube O.D. in.	Ordering Number
1/8	SS-FF-DFF2
1/4	SS-FF-DFF4
3/8	SS-FF-DFF6
1/2	SS-FF-DFF8
9/16	SS-FF-DFF9
3/4	SS-FF-DFF12
1	SS-FF-DFF16

Rear Ferrules

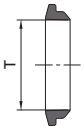

Tube	
T - Tube O.D. in.	Ordering Number
1/8	SS-RF-DFF2
1/4	SS-RF-DFF4
3/8	SS-RF-DFF6
1/2	SS-RF-DFF8
9/16	SS-RF-DFF9
3/4	SS-RF-DFF12
1	SS-RF-DFF16

Nut-Ferrule Sets



Figure above shows the nut-ferrule set with an arbor.
One arbor holds 1 nut-ferrule set.
The nut-ferrule set contains 1 nut, 1 rear ferrule and 1 front ferrule.

Tube	
T - Tube O.D. in.	Ordering Number
1/8	SS-NFS-DFF2
1/4	SS-NFS-DFF4
3/8	SS-NFS-DFF6
1/2	SS-NFS-DFF8
9/16	SS-NFS-DFF9
3/4	SS-NFS-DFF12
1	SS-NFS-DFF16

Ferrule Sets



Figure above shows the nut-ferrule sets with an arbor.
One arbor holds 5 ferrule sets.
The ferrule set contains 1 rear ferrule and 1 front ferrule.
Please order ferrule sets in multiples of 5.

Tube	
T - Tube O.D. in.	Ordering Number
1/8	SS-FRS-DFF2
1/4	SS-FRS-DFF4
3/8	SS-FRS-DFF6
1/2	SS-FRS-DFF8
9/16	SS-FRS-DFF9
3/4	SS-FRS-DFF12
1	SS-FRS-DFF16

Plugs①

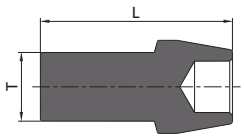

Tube		
T - Tube O.D. in.	Ordering Number	Dimensions, in. (mm)
		L
1/8	SS-DTP-DFF2	0.95 (24.2)
1/4	SS-DTP-DFF4	1.20 (30.4)
3/8	SS-DTP-DFF6	1.19 (30.2)
1/2	SS-DTP-DFF8	1.36 (34.6)
9/16	SS-DTP-DFF9	1.73 (44.0)
3/4	SS-DTP-DFF12	2.30 (58.3)
1	SS-DTP-DFF16	2.64 (67.0)

① *When using plug, ferrules are not required.*

Caps

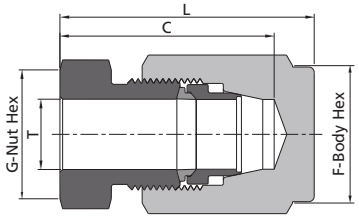

Tube					
T - Tube O.D. in.	Ordering Number	Dimensions, in. (mm)			
		L	C	F	G
1/8	SS-DTC-DFF2	1.22 (31.1)	1.07 (27.2)	0.50 (12.7)	0.37 (9.5)
1/4	SS-DTC-DFF4	1.70 (43.1)	1.38 (35.2)	0.63 (15.9)	0.63 (15.9)
3/8	SS-DTC-DFF6	1.76 (44.8)	1.42 (36.1)	0.75 (19.1)	0.75 (19.1)
1/2	SS-DTC-DFF8	1.85 (47.0)	1.56 (39.6)	1.00 (25.4)	0.94 (23.8)
9/16	SS-DTC-DFF9	2.46 (62.6)	1.93 (49.0)	1.13 (28.6)	1.06 (27.0)
3/4	SS-DTC-DFF12	3.22 (81.9)	2.49 (63.3)	1.50 (38.1)	1.38 (34.9)
1	SS-DTC-DFF16	4.06 (103.2)	3.24 (82.3)	2.00 (50.8)	1.88 (47.6)

Unions

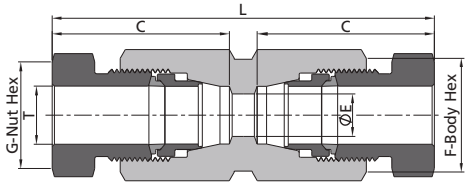

Tube						
T - Tube O.D. in.	Ordering Number	Dimensions, in. (mm)				
		L	C	E	F	G
1/8	SS-DU-DFF2	2.45 (62.2)	1.07 (27.2)	0.09 (2.4)	0.50 (12.7)	0.37 (9.5)
1/4	SS-DU-DFF4	3.00 (76.2)	1.38 (35.2)	0.19 (4.8)	0.63 (15.9)	0.63 (15.9)
3/8	SS-DU-DFF6	3.07 (77.9)	1.42 (36.1)	0.25 (6.4)	0.75 (19.1)	0.75 (19.1)
1/2	SS-DU-DFF8	3.36 (85.4)	1.56 (39.6)	0.37 (9.5)	1.00 (25.4)	0.94 (23.8)
9/16	SS-DU-DFF9	4.11 (104.4)	1.93 (49.0)	0.41 (10.4)	1.13 (28.6)	1.06 (27.0)
3/4	SS-DU-DFF12	5.38 (136.7)	2.49 (63.3)	0.56 (14.2)	1.50 (38.1)	1.38 (34.9)
1	SS-DU-DFF16	7.06 (179.3)	3.24 (82.3)	0.69 (17.5)	2.00 (50.8)	1.88 (47.6)

Reducing Unions

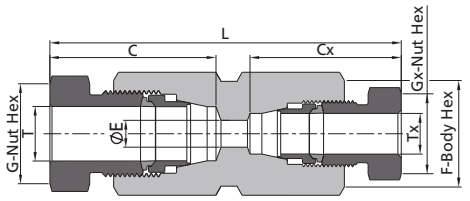

Tube								
T - Tube O.D. in.	Tx - Tube O.D. in.	Ordering Number	Dimensions, in. (mm)					
			L	C	Cx	E	F	G	Gx
1/4	1/8	SS-DU-DFF4-DFF2	2.73 (69.4)	1.39 (35.2)	1.07 (27.2)	0.09 (2.4)	0.63 (15.9)	0.63 (15.9)	0.37 (9.5)
3/8	1/8	SS-DU-DFF6-DFF2	2.77 (70.3)	1.42 (36.1)	1.07 (27.2)	0.09 (2.4)	0.75 (19.1)	0.75 (19.1)	0.37 (9.5)
3/8	1/4	SS-DU-DFF6-DFF4	3.06 (77.6)	1.42 (36.1)	1.39 (35.2)	0.19 (4.8)	0.75 (19.1)	0.75 (19.1)	0.63 (15.9)
1/2	1/4	SS-DU-DFF8-DFF4	3.35 (85.1)	1.56 (39.6)	1.39 (35.2)	0.19 (4.8)	1.00 (25.4)	0.94 (23.8)	0.63 (15.9)
1/2	3/8	SS-DU-DFF8-DFF6	3.32 (84.3)	1.56 (39.6)	1.42 (36.1)	0.25 (6.4)	1.00 (25.4)	0.94 (23.8)	0.75 (19.1)
9/16	1/2	SS-DU-DFF9-DFF8	4.04 (102.5)	1.93 (49.0)	1.56 (39.6)	0.37 (9.5)	1.13 (28.6)	1.06 (27.0)	0.94 (23.8)
3/4	1/2	SS-DU-DFF12-DFF8	4.73 (120.2)	2.49 (63.3)	1.56 (39.6)	0.37 (9.5)	1.50 (38.1)	1.38 (34.9)	0.94 (23.8)
1	1/2	SS-DU-DFF16-DFF8	5.35 (135.9)	3.24 (82.3)	1.56 (39.6)	0.37 (9.5)	2.00 (50.8)	1.88 (47.6)	0.94 (23.8)

Bulkhead Unions

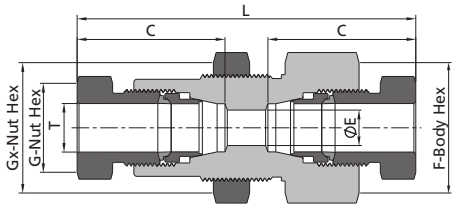

Tube									
T - Tube O.D. in.	Ordering Number	Dimensions, in. (mm)							
		L	C	E	F	G	Gx	Panel Hole Size	Maximum Panel Thickness
1/8	SS-DBU-DFF2	2.95 (75.0)	1.07 (27.2)	0.09 (2.4)	0.75 (19.1)	0.37 (9.5)	0.81 (20.6)	0.69 (17.5)	0.38 (9.7)
1/4	SS-DBU-DFF4	3.27 (83.1)	1.38 (35.2)	0.19 (4.8)	1.00 (25.4)	0.63 (15.9)	1.06 (27.0)	0.94 (23.9)	0.38 (9.7)
3/8	SS-DBU-DFF6	3.21 (81.6)	1.42 (36.1)	0.25 (6.4)	1.00 (25.4)	0.75 (19.1)	1.06 (27.0)	0.94 (23.9)	0.38 (9.7)
1/2	SS-DBU-DFF8	3.93 (99.8)	1.56 (39.6)	0.37 (9.5)	1.38 (34.9)	0.94 (23.8)	1.38 (34.9)	1.13 (28.6)	0.38 (9.7)
9/16	SS-DBU-DFF9	4.64 (117.8)	1.93 (49.0)	0.41 (10.4)	1.63 (41.3)	1.06 (27.0)	1.63 (41.3)	1.33 (33.7)	0.38 (9.7)
3/4	SS-DBU-DFF12	5.82 (147.9)	2.49 (63.3)	0.56 (14.2)	1.87 (47.6)	1.38 (34.9)	1.87 (47.6)	1.64 (41.7)	0.38 (9.7)
1	SS-DBU-DFF16	7.45 (189.3)	3.24 (82.3)	0.69 (17.5)	2.50 (63.5)	1.88 (47.6)	2.50 (63.5)	2.27 (57.6)	0.38 (9.7)

Male Connectors

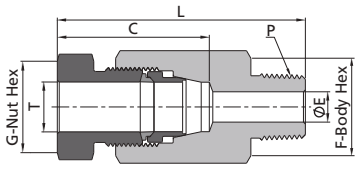

Tube							NPT Thread
T - Tube O.D. in.	P - NPT Size in.	Ordering Number	Dimensions, in. (mm)				
			L	C	E	F	G
1/8	1/8	SS-DCM-DFF2-NS2	1.60 (40.6)	1.07 (27.2)	0.09 (2.4)	0.50 (12.7)	0.37 (9.5)
1/8	1/4	SS-DCM-DFF2-NS4	1.72 (43.8)	1.07 (27.2)	0.09 (2.4)	0.56 (14.3)	0.37 (9.5)
1/8	3/8	SS-DCM-DFF2-NS6	1.72 (43.8)	1.07 (27.2)	0.09 (2.4)	0.69 (17.5)	0.37 (9.5)
1/4	1/8	SS-DCM-DFF4-NS2	1.95 (49.5)	1.39 (35.2)	0.19 (4.8)	0.63 (15.9)	0.63 (15.9)
1/4	1/4	SS-DCM-DFF4-NS4	2.08 (52.8)	1.39 (35.2)	0.19 (4.8)	0.63 (15.9)	0.63 (15.9)
1/4	3/8	SS-DCM-DFF4-NS6	2.08 (52.8)	1.39 (35.2)	0.19 (4.8)	0.69 (17.5)	0.63 (15.9)
1/4	1/2	SS-DCM-DFF4-NS8	2.32 (59.0)	1.39 (35.2)	0.19 (4.8)	0.87 (22.2)	0.63 (15.9)
3/8	1/4	SS-DCM-DFF6-NS4	2.17 (55.1)	1.42 (36.1)	0.25 (6.4)	0.75 (19.1)	0.75 (19.1)
3/8	3/8	SS-DCM-DFF6-NS6	2.17 (55.1)	1.42 (36.1)	0.25 (6.4)	0.75 (19.1)	0.75 (19.1)
3/8	1/2	SS-DCM-DFF6-NS8	2.30 (58.3)	1.42 (36.1)	0.25 (6.4)	0.87 (22.2)	0.75 (19.1)
1/2	1/4	SS-DCM-DFF8-NS4	2.53 (64.3)	1.56 (39.6)	0.25 (6.4)	1.00 (25.4)	0.94 (23.8)
1/2	3/8	SS-DCM-DFF8-NS6	2.53 (64.3)	1.56 (39.6)	0.31 (7.9)	1.00 (25.4)	0.94 (23.8)
1/2	1/2	SS-DCM-DFF8-NS8	2.65 (67.4)	1.56 (39.6)	0.37 (9.5)	1.00 (25.4)	0.94 (23.8)
1/2	3/4	SS-DCM-DFF8-NS12	2.53 (64.3)	1.56 (39.6)	0.37 (9.5)	1.06 (27.0)	0.94 (23.8)
9/16	1/4	SS-DCM-DFF9-NS4	3.03 (77.0)	1.93 (49.0)	0.25 (6.4)	1.13 (28.6)	1.06 (27.0)
9/16	1/2	SS-DCM-DFF9-NS8	3.11 (79.1)	1.93 (49.0)	0.38 (9.6)	1.13 (28.6)	1.06 (27.0)
3/4	1/2	SS-DCM-DFF12-NS8	3.74 (95.1)	2.49 (63.3)	0.38 (9.6)	1.50 (38.1)	1.38 (34.9)
3/4	3/4	SS-DCM-DFF12-NS12	3.74 (95.1)	2.49 (63.3)	0.56 (14.2)	1.50 (38.1)	1.38 (34.9)
3/4	1	SS-DCM-DFF12-NS16	3.83 (97.4)	2.49 (63.3)	0.56 (14.2)	1.50 (38.1)	1.38 (34.9)
1	1/2	SS-DCM-DFF16-NS8	4.46 (113.2)	3.24 (82.3)	0.38 (9.6)	2.00 (50.8)	1.88 (47.6)
1	3/4	SS-DCM-DFF16-NS12	4.46 (113.2)	3.24 (82.3)	0.58 (14.8)	2.00 (50.8)	1.88 (47.6)
1	1	SS-DCM-DFF16-NS16	4.65 (118.1)	3.24 (82.3)	0.69 (17.5)	2.00 (50.8)	1.88 (47.6)

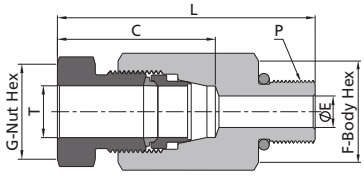

Tube							Male SAE O-Ring
T - Tube O.D. in.	P - SAE/MS Thread Size	Ordering Number	Dimensions, in. (mm)				
			L	C	E	F	G
1/8	7/16-20	SS-DCM-DFF2-SH7	1.60 (40.6)	1.07 (27.2)	0.09 (2.4)	0.56 (14.3)	0.37 (9.5)
1/8	9/16-18	SS-DCM-DFF2-SH9	1.66 (42.2)	1.07 (27.2)	0.09 (2.4)	0.69 (17.5)	0.37 (9.5)
1/4	7/16-20	SS-DCM-DFF4-SH7	2.04 (51.7)	1.39 (35.2)	0.18 (4.5)	0.63 (15.9)	0.63 (15.9)
1/4	9/16-18	SS-DCM-DFF4-SH9	2.07 (52.7)	1.39 (35.2)	0.19 (4.8)	0.69 (17.5)	0.63 (15.9)
3/8	7/16-20	SS-DCM-DFF6-SH7	2.09 (53.0)	1.42 (36.1)	0.18 (4.5)	0.75 (19.1)	0.75 (19.1)
3/8	9/16-18	SS-DCM-DFF6-SH9	2.13 (54.0)	1.42 (36.1)	0.25 (6.4)	0.75 (19.1)	0.75 (19.1)
1/2	7/16-20	SS-DCM-DFF8-SH7	2.49 (63.3)	1.56 (39.6)	0.18 (4.5)	1.00 (25.4)	0.94 (23.8)
1/2	9/16-18	SS-DCM-DFF8-SH9	2.49 (63.3)	1.56 (39.6)	0.30 (7.5)	1.00 (25.4)	0.94 (23.8)

Female Connectors

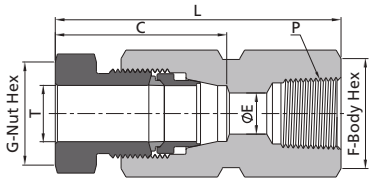

Tube							NPT Thread
T - Tube O.D. in.	P - NPT Size in.	Ordering Number	Dimensions, in. (mm)				
			L	C	E	F	G
1/8	1/8	SS-DCF-DFF2-FNS2	1.97 (50.1)	1.07 (27.2)	0.09 (2.4)	0.63 (15.9)	0.37 (9.5)
1/8	1/4	SS-DCF-DFF2-FNS4	2.01 (53.3)	1.07 (27.2)	0.09 (2.4)	0.94 (23.8)	0.37 (9.5)
1/4	1/4	SS-DCF-DFF4-FNS4	2.33 (59.1)	1.38 (35.2)	0.19 (4.8)	0.94 (23.8)	0.63 (15.9)
3/8	1/4	SS-DCF-DFF6-FNS4	2.29 (58.1)	1.42 (36.1)	0.25 (6.4)	0.94 (23.8)	0.75 (19.1)
1/2	1/4	SS-DCF-DFF8-FNS4	2.78 (70.6)	1.56 (39.6)	0.37 (9.5)	1.00 (25.4)	0.94 (23.8)
1/2	1/2	SS-DCF-DFF8-FNS8	3.03 (77.0)	1.56 (39.6)	0.37 (9.5)	1.38 (34.9)	0.94 (23.8)
3/4	1/2	SS-DCF-DFF12-FNS8	3.85 (97.8)	2.49 (63.3)	0.56 (14.2)	1.50 (38.1)	1.38 (34.9)
1	1	SS-DCF-DFF16-FNS16	4.75 (120.7)	3.24 (82.3)	0.69 (17.5)	2.00 (50.8)	1.88 (47.6)

Union Elbows

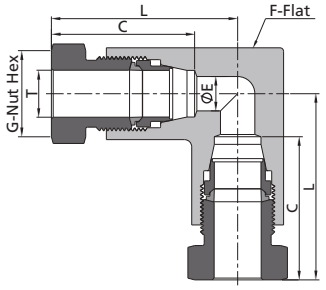

Tube							
T - Tube O.D. in.	Ordering Number	Dimensions, in. (mm)					
		L	C	E	F	G	
1/8	SS-DLU-DFF2	1.29 (32.7)	1.07 (27.2)	0.09 (2.4)	0.63 (15.9)	0.37 (9.5)	
1/4	SS-DLU-DFF4	1.70 (43.1)	1.38 (35.2)	0.19 (4.8)	0.63 (15.9)	0.63 (15.9)	
3/8	SS-DLU-DFF6	1.67 (42.4)	1.42 (36.1)	0.25 (6.4)	0.75 (19.1)	0.75 (19.1)	
1/2	SS-DLU-DFF8	2.03 (51.6)	1.56 (39.6)	0.37 (9.5)	1.00 (25.4)	0.94 (23.8)	
9/16	SS-DLU-DFF9	2.43 (61.8)	1.93 (49.0)	0.41 (10.4)	1.38 (34.9)	1.06 (27.0)	
3/4	SS-DLU-DFF12	3.11 (79.1)	2.49 (63.3)	0.56 (14.2)	1.50 (38.1)	1.38 (34.9)	
1	SS-DLU-DFF16	4.14 (105.2)	3.24 (82.3)	0.69 (17.5)	2.25 (57.2)	1.88 (47.6)	

Union Reducing Elbows

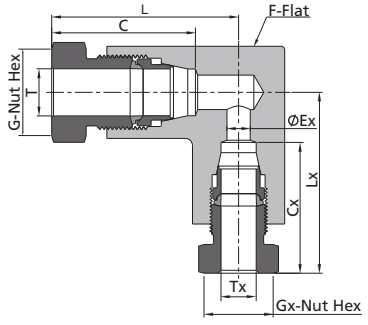

Tube									
T - Tube O.D. in.	Tx - Tube O.D. in.	Ordering Number	Dimensions, in. (mm)						
			L	Lx	C	Cx	Ex	F	G	Gx
1/4	1/8	SS-DLU-DFF4-DFF2	1.70 (43.1)	1.37 (34.7)	1.38 (35.2)	1.07 (27.2)	0.09 (2.4)	0.63 (15.9)	0.63 (15.9)	0.37 (9.5)
3/8	1/8	SS-DLU-DFF6-DFF2	1.67 (42.4)	1.33 (33.7)	1.42 (36.1)	1.07 (27.2)	0.09 (2.4)	0.75 (19.1)	0.75 (19.1)	0.37 (9.5)
3/8	1/4	SS-DLU-DFF6-DFF4	1.67 (42.4)	1.70 (43.1)	1.42 (36.1)	1.38 (35.2)	0.19 (4.8)	0.75 (19.1)	0.75 (19.1)	0.63 (15.9)
1/2	1/4	SS-DLU-DFF8-DFF4	2.03 (51.6)	1.95 (49.5)	1.56 (39.6)	1.38 (35.2)	0.19 (4.8)	0.94 (23.8)	1.00 (25.4)	0.63 (15.9)
1/2	3/8	SS-DLU-DFF8-DFF6	2.03 (51.6)	1.96 (49.8)	1.56 (39.6)	1.42 (36.1)	0.25 (6.4)	0.94 (23.8)	1.00 (25.4)	0.75 (19.1)
9/16	1/2	SS-DLU-DFF9-DFF8	2.43 (61.8)	2.37 (60.2)	1.93 (49.0)	1.56 (39.6)	0.37 (9.5)	1.38 (34.9)	1.06 (27.0)	0.94 (23.8)
3/4	1/2	SS-DLU-DFF12-DFF8	3.11 (79.1)	2.49 (63.3)	2.49 (63.3)	1.56 (39.6)	0.37 (9.5)	1.50 (38.1)	1.38 (34.9)	0.94 (23.8)
1	1/2	SS-DLU-DFF16-DFF8	4.14 (105.2)	2.47 (62.8)	3.24 (82.3)	1.56 (39.6)	0.37 (9.5)	2.25 (57.2)	1.88 (47.6)	0.94 (23.8)
1	9/16	SS-DLU-DFF16-DFF9	4.14 (105.2)	2.82 (71.6)	3.24 (82.3)	1.93 (49.0)	0.41 (10.4)	2.25 (57.2)	1.88 (47.6)	1.06 (27.0)
1	3/4	SS-DLU-DFF16-DFF12	4.14 (105.2)	3.45 (87.6)	3.24 (82.3)	2.49 (63.3)	0.56 (14.2)	2.25 (57.2)	1.88 (47.6)	1.38 (34.9)

Male Elbows

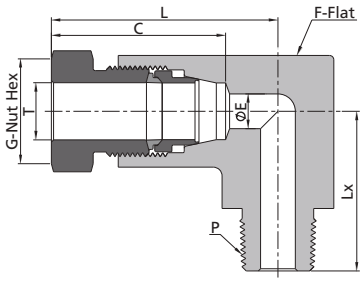

Tube								NPT Thread
T - Tube O.D. in.	P - NPT Size in.	Ordering Number	Dimensions, in. (mm)					
			L	Lx	C	E	F	G
1/8	1/8	SS-DLM-DFF2-NS2	1.29 (32.7)	0.79 (20.0)	1.07 (27.2)	0.09 (2.4)	0.63 (15.9)	0.37 (9.5)
1/8	1/4	SS-DLM-DFF2-NS4	1.39 (35.3)	1.00 (25.4)	1.07 (27.2)	0.09 (2.4)	0.63 (15.9)	0.37 (9.5)
1/8	3/8	SS-DLM-DFF2-NS6	1.47 (37.4)	1.00 (25.4)	1.07 (27.2)	0.09 (2.4)	0.75 (19.1)	0.37 (9.5)
1/4	1/4	SS-DLM-DFF4-NS4	1.70 (43.1)	0.94 (23.8)	1.38 (35.2)	0.19 (4.8)	0.63 (15.9)	0.63 (15.9)
1/4	3/8	SS-DLM-DFF4-NS6	1.70 (43.1)	1.00 (25.4)	1.38 (35.2)	0.19 (4.8)	0.75 (19.1)	0.63 (15.9)
1/4	1/2	SS-DLM-DFF4-NS8	1.70 (43.1)	1.38 (34.9)	1.38 (35.2)	0.19 (4.8)	1.00 (25.4)	0.63 (15.9)
3/8	1/4	SS-DLM-DFF6-NS4	1.67 (42.4)	1.00 (25.4)	1.42 (36.1)	0.25 (6.4)	0.75 (19.1)	0.75 (19.1)
3/8	3/8	SS-DLM-DFF6-NS6	1.67 (42.4)	1.06 (27.0)	1.42 (36.1)	0.25 (6.4)	0.75 (19.1)	0.75 (19.1)
3/8	1/2	SS-DLM-DFF6-NS8	1.67 (42.4)	1.38 (34.9)	1.42 (36.1)	0.25 (6.4)	1.00 (25.4)	0.75 (19.1)
1/2	1/4	SS-DLM-DFF8-NS4	2.03 (51.6)	1.19 (30.2)	1.56 (39.6)	0.25 (6.4)	1.00 (25.4)	0.94 (23.8)
1/2	3/8	SS-DLM-DFF8-NS6	2.03 (51.6)	1.19 (30.2)	1.56 (39.6)	0.31 (7.9)	1.00 (25.4)	0.94 (23.8)
1/2	1/2	SS-DLM-DFF8-NS8	2.03 (51.6)	1.38 (34.9)	1.56 (39.6)	0.37 (9.5)	1.00 (25.4)	0.94 (23.8)
9/16	1/2	SS-DLM-DFF9-NS8	2.43 (61.8)	1.56 (39.5)	1.93 (49.0)	0.38 (9.6)	1.38 (34.9)	1.06 (27.0)
3/4	1/2	SS-DLM-DFF12-NS8	3.11 (79.1)	1.73 (44.0)	2.49 (63.3)	0.38 (9.6)	1.50 (38.1)	1.38 (34.9)
3/4	3/4	SS-DLM-DFF12-NS12	3.11 (79.1)	1.73 (44.0)	2.49 (63.3)	0.56 (14.2)	1.50 (38.1)	1.38 (34.9)
1	1/2	SS-DLM-DFF16-NS8	4.14 (105.2)	2.06 (52.4)	3.24 (82.3)	0.38 (9.6)	2.25 (57.2)	1.88 (47.6)
1	3/4	SS-DLM-DFF16-NS12	4.14 (105.2)	2.06 (52.4)	3.24 (82.3)	0.58 (14.8)	2.25 (57.2)	1.88 (47.6)
1	1	SS-DLM-DFF16-NS16	4.14 (105.2)	2.25 (57.2)	3.24 (82.3)	0.69 (17.5)	2.25 (57.2)	1.88 (47.6)

Union Tees

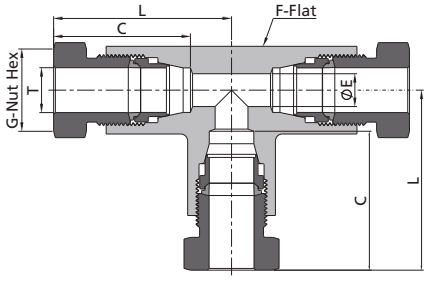

Tube						
T - Tube O.D. in.	Ordering Number	Dimensions, in. (mm)				
		L	C	E	F	G
1/8	SS-DT-DFF2	1.37 (34.7)	1.07 (27.2)	0.09 (2.4)	0.63 (15.9)	0.37 (9.5)
1/4	SS-DT-DFF4	1.70 (43.1)	1.38 (35.2)	0.19 (4.8)	0.63 (15.9)	0.63 (15.9)
3/8	SS-DT-DFF6	1.67 (42.4)	1.42 (36.1)	0.25 (6.4)	0.75 (19.1)	0.75 (19.1)
1/2	SS-DT-DFF8	2.03 (51.6)	1.56 (39.6)	0.37 (9.5)	1.00 (25.4)	0.94 (23.8)
9/16	SS-DT-DFF9	2.43 (61.8)	1.93 (49.0)	0.41 (10.4)	1.38 (34.9)	1.06 (27.0)
3/4	SS-DT-DFF12	3.11 (79.1)	2.49 (63.3)	0.56 (14.2)	1.50 (38.1)	1.38 (34.9)
1	SS-DT-DFF16	4.14 (105.2)	3.24 (82.3)	0.69 (17.5)	2.25 (57.2)	1.88 (47.6)

Male Branch Tees

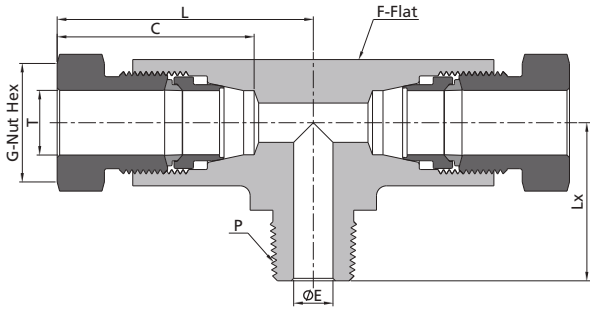

Tube								NPT Thread
T - Tube O.D. in.	P - NPT Size in.	Ordering Number	Dimensions, in. (mm)					
			L	Lx	C	E	F	G
1/8	1/8	SS-DT-DFF2-DFF2-NS2	1.37 (34.7)	0.79 (20.0)	1.07 (27.2)	0.09 (2.4)	0.63 (15.9)	0.37 (9.5)
1/8	1/4	SS-DT-DFF2-DFF2-NS4	1.37 (34.7)	1.00 (25.4)	1.07 (27.2)	0.09 (2.4)	0.63 (15.9)	0.37 (9.5)
1/4	1/8	SS-DT-DFF4-DFF4-NS2	1.70 (43.1)	0.81 (20.6)	1.38 (35.2)	0.19 (4.8)	0.63 (15.9)	0.63 (15.9)
1/4	1/4	SS-DT-DFF4-DFF4-NS4	1.70 (43.1)	1.00 (25.4)	1.38 (35.2)	0.19 (4.8)	0.63 (15.9)	0.63 (15.9)
3/8	1/4	SS-DT-DFF6-DFF6-NS4	1.67 (42.4)	1.06 (27.0)	1.42 (36.1)	0.25 (6.4)	0.75 (19.1)	0.75 (19.1)
1/2	1/4	SS-DT-DFF8-DFF8-NS4	2.03 (51.6)	1.19 (30.2)	1.56 (39.6)	0.25 (6.4)	1.00 (25.4)	0.94 (23.8)
1/2	3/8	SS-DT-DFF8-DFF8-NS6	2.03 (51.6)	1.19 (30.2)	1.56 (39.6)	0.31 (7.9)	1.00 (25.4)	0.94 (23.8)
3/4	3/4	SS-DT-DFF12-DFF12-NS12	3.11 (79.1)	1.73 (44.0)	2.49 (63.3)	0.56 (14.2)	1.50 (38.1)	1.38 (34.9)
1	1/2	SS-DT-DFF16-DFF16-NS8	4.14 (105.2)	2.06 (52.4)	3.24 (82.3)	0.38 (9.6)	2.25 (57.2)	1.88 (47.6)
1	3/4	SS-DT-DFF16-DFF16-NS12	4.14 (105.2)	2.06 (52.4)	3.24 (82.3)	0.58 (14.8)	2.25 (57.2)	1.88 (47.6)
1	1	SS-DT-DFF16-DFF16-NS16	4.14 (105.2)	2.25 (57.2)	3.24 (82.3)	0.69 (17.5)	2.25 (57.2)	1.88 (47.6)

Union Crosses

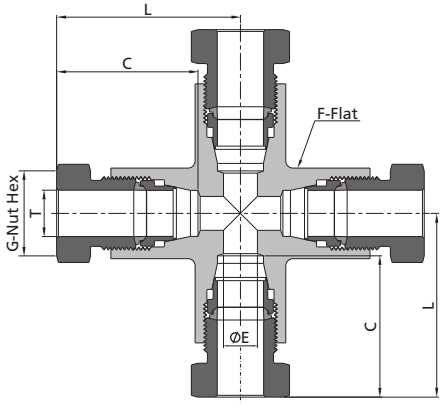

Tube						
T - Tube O.D. in.	Ordering Number	Dimensions, in. (mm)				
		L	C	E	F	G
1/8	SS-DX-DFF2	1.37 (34.7)	1.07 (27.2)	0.09 (2.4)	0.63 (15.9)	0.37 (9.5)
1/4	SS-DX-DFF4	1.70 (43.1)	1.38 (35.2)	0.19 (4.8)	0.63 (15.9)	0.63 (15.9)
3/8	SS-DX-DFF6	1.67 (42.4)	1.42 (36.1)	0.25 (6.4)	0.75 (19.1)	0.75 (19.1)
1/2	SS-DX-DFF8	2.03 (51.6)	1.56 (39.6)	0.37 (9.5)	1.00 (25.4)	0.94 (23.8)
9/16	SS-DX-DFF9	2.43 (61.8)	1.93 (49.0)	0.41 (10.4)	1.38 (34.9)	1.06 (27.0)
3/4	SS-DX-DFF12	3.01 (76.4)	2.49 (63.3)	0.56 (14.2)	1.50 (38.1)	1.38 (34.9)
1	SS-DX-DFF16	4.14 (105.2)	3.24 (82.3)	0.69 (17.5)	2.25 (57.2)	1.88 (47.6)

Reducers①

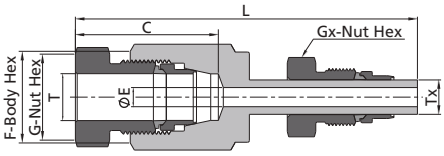

Tube								
T - Tube O.D. in.	Tx - Tube O.D. in.	Ordering Number	Dimensions, in. (mm)					
			L	C	E	F	G	Gx
1/4	3/8	SS-DR-DFF4-DFT6	3.20 (82.1)	1.38 (35.2)	0.19 (4.8)	0.63 (15.9)	0.63 (15.9)	0.75 (19.1)
1/4	1/2	SS-DR-DFF4-DFT8	3.37 (85.5)	1.38 (35.2)	0.19 (4.8)	0.63 (15.9)	0.63 (15.9)	0.94 (23.8)
3/8	1/2	SS-DR-DFF6-DFT8	3.43 (87.1)	1.42 (36.1)	0.25 (6.4)	0.75 (19.1)	0.75 (19.1)	0.94 (23.8)
1/2	3/8	SS-DR-DFF8-DFT6	3.53 (89.7)	1.56 (39.6)	0.21 (5.3)	1.00 (25.4)	0.94 (23.8)	0.75 (19.1)
1/2	3/4	SS-DR-DFF8-DFT12	5.13 (130.4)	1.56 (39.6)	0.37 (9.5)	1.00 (25.4)	0.94 (23.8)	1.38 (34.9)
9/16	3/4	SS-DR-DFF9-DFT12	5.32 (135.1)	1.93 (49.0)	0.41 (10.4)	1.13 (28.6)	1.06 (27.0)	1.38 (34.9)
3/4	9/16	SS-DR-DFF12-DFT9	5.46 (138.6)	2.49 (63.3)	0.31 (7.9)	1.50 (38.1)	1.38 (34.9)	1.06 (27.0)
1	3/4	SS-DR-DFF16-DFT12	6.92 (175.7)	3.24 (82.3)	0.42 (10.7)	2.00 (50.8)	1.88 (47.6)	1.38 (34.9)

① *The right ends of reducers will be preassembled with ferrules before shipping. Please follow the Reinstallation Instructions in A-107 when installing the reducers.*

Port Connectors①

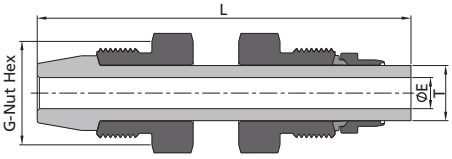

① *The port connectors will be preassembled with ferrules before shipping. Please follow the Reinstallation Instructions in A-107 when installing the port connectors.*

Tube				
T - Tube O.D. in.	Ordering Number	Dimensions, in. (mm)		
		L	E	G
1/8	SS-DP-DFF2	2.06 (52.2)	0.06 (1.6)	0.37 (9.5)
1/4	SS-DP-DFF4	2.66 (67.5)	0.12 (3.0)	0.63 (15.9)
3/8	SS-DP-DFF6	2.72 (69.0)	0.21 (5.3)	0.75 (19.1)
1/2	SS-DP-DFF8	3.04 (77.3)	0.28 (7.1)	0.94 (23.8)
9/16	SS-DP-DFF9	3.80 (96.5)	0.31 (7.9)	1.06 (27.0)
3/4	SS-DP-DFF12	4.83 (122.8)	0.42 (10.7)	1.38 (34.9)
1	SS-DP-DFF16	5.98 (152.0)	0.66 (16.7)	1.88 (47.6)

Adapters①

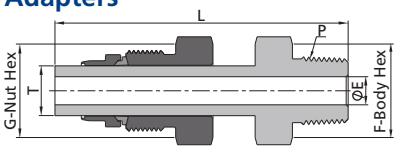

Tube						NPT Thread
T - Tube O.D. in.	P - NPT Size	Ordering Number	Dimensions, in. (mm)			
			L	E	F	G
1/4	1/4	SS-DAM-DFT4-NS4	2.30 (58.5)	0.12 (3.0)	0.56 (14.3)	0.63 (15.9)
3/8	1/4	SS-DAM-DFT6-NS4	2.38 (60.4)	0.21 (5.3)	0.56 (14.3)	0.75 (19.1)
3/8	1/2	SS-DAM-DFT6-NS8	2.67 (67.9)	0.21 (5.3)	0.87 (22.2)	0.75 (19.1)
1/2	1/4	SS-DAM-DFT8-NS4	2.55 (64.8)	0.25 (6.4)	0.56 (14.3)	0.94 (23.8)
1/2	1/2	SS-DAM-DFT8-NS8	2.84 (72.2)	0.28 (7.1)	0.87 (22.2)	0.94 (23.8)
9/16	1/2	SS-DAM-DFT9-NS8	3.64 (92.4)	0.31 (7.9)	0.87 (22.2)	1.06 (27.0)
3/4	3/4	SS-DAM-DFT12-NS12	4.39 (111.6)	0.42 (10.7)	1.06 (27.0)	1.38 (34.9)
1	1	SS-DAM-DFT16-NS16	5.43 (137.9)	0.66 (16.7)	1.38 (34.9)	1.88 (47.6)

① *The adapters will be preassembled with ferrules before shipping. Please follow the Reinstallation Instructions in A-107 when installing the adapters.*

Installation Instructions

Please see A-110.

Connection Information

Please see A-02.

FITOK

Ordering Number Description

SS – DU – DFF8 – DFF6 – □ – □ – EC79

Material

SS	316 SS

Fitting Type

N	Nut
FF	Front Ferrule
RF	Rear Ferrule
DTP	Plug
DTC	Cap
DU	Union or Reducing Union
DBU	Bulkhead Union
DCM	Male Connector
DCF	Female Connector
DLU	Union Elbow Union Reducing Elbow
DLM	Male Elbow
DT	Union Tee Male Branch Tee
DX	Union Cross
DR	Reducer
DP	Port Connector
DAM	Adapter

P1 Type

DFF	Female 20D Series
DFT	20D Series Tube Stub with Double Ferrules and Nut

P1 Size

2	1/8"
4	1/4"
6	3/8"
8	1/2"
9	9/16"
12	3/4"
16	1"

P2 Type

Except the same as the P1, the other types are as follows:

NS	Male NPT
FNS	Female NPT
SH	Male SAE O-Ring

P2 Size

Except the same as the P1, the other sizes are as follows:

7	7/16-20 (Thread Size)
9	9/16-18 (Thread Size)

P3 and P4

Specified in the same way as the P2

Approval

	None
EC79	EC-79 Certified

Notes: 1. For more details regarding 20D Series connection, please see **Connection Information** on A-02.

2. "Ordering Number Description" is a reference to understand the combination rules of FITOK product part number. Not all combinations are available.

20M Series Medium Pressure Fittings

20,000 psig (1379 bar)



Contents

Glands - MG



A-24

Collars - MCO



A-24

Plugs - MTP

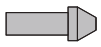

A-25

Caps - MTC



A-25

Unions - MU

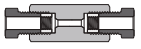

A-25

Reducing Unions - MU

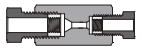

A-26

Unions (Slip Type) - MSU

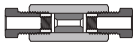

A-26

Bulkhead Unions - MBU

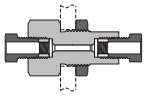

A-27

Union Elbows - MLU



A-27

Union Tees - MT

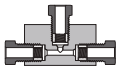

A-28

Union Crosses - MX

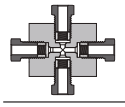

A-28

Anti-vibration Gland Assemblies - MAV

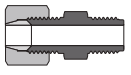

A-28

Installation Instructions A-112

Connection Information A-02

Ordering Number Description A-29

Features

- Working pressure up to 20,000 psig (1379 bar)
- Working temperature range: -423°F to 1200°F (-252°C to 649°C)
- Use with T20M series tubing as standard, tubing sizes available in 1/4", 3/8", 9/16", 3/4", 1" and 1 1/2"
- High tensile 316 stainless steel material
- Every fitting marked with size, material and trace ID

Construction

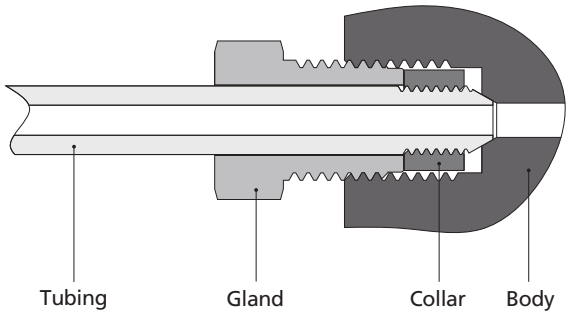

Ordering Information and Dimensions

Dimensions are for reference only and are subject to change.

Glands

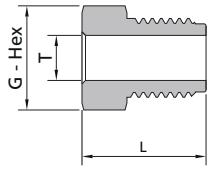

Tube			
T - Tube O.D. in.	Ordering Number	Dimensions, in. (mm)	
		G	L
1/4	SS-MG-MF4	0.50 (12.7)	0.58 (14.7)
3/8	SS-MG-MF6	0.63 (15.9)	0.73 (18.5)
9/16	SS-MG-MF9	0.94 (23.8)	0.88 (22.4)
3/4	SS-MG-MF12	1.19 (30.2)	1.00 (25.4)
1	SS-MG-MF16	1.38 (34.9)	1.38 (35.1)
1 1/2	SS-MG-MF24	1.87 (47.6)	2.00 (51.0)

Collars

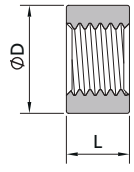

Tube			
T - Tube O.D. in.	Ordering Number	Dimensions, in. (mm)	
		D	L
1/4	SS-MCO-MF4	0.38 (9.7)	0.22 (5.6)
3/8	SS-MCO-MF6	0.47 (11.9)	0.25 (6.4)
9/16	SS-MCO-MF9	0.72 (18.3)	0.31 (7.9)
3/4	SS-MCO-MF12	0.94 (23.8)	0.37 (9.4)
1	SS-MCO-MF16	1.25 (31.8)	0.50 (12.7)
1 1/2	SS-MCO-MF24	1.75 (44.5)	0.48 (12.2)

Plugs ①

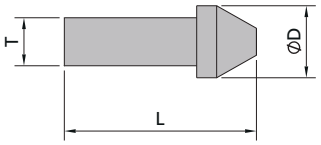

Tube			
T - Tube O.D. in.	Ordering Number	Dimensions, in. (mm)	
		D	L
1/4	SS-MTP-MF4	0.38 (9.7)	0.94 (23.8)
3/8	SS-MTP-MF6	0.47 (11.9)	1.18 (30.0)
9/16	SS-MTP-MF9	0.72 (18.3)	1.40 (35.6)
3/4	SS-MTP-MF12	0.94 (23.8)	1.69 (42.9)
1	SS-MTP-MF16	1.25 (31.8)	2.20 (55.9)
1 1/2	SS-MTP-MF24	1.75 (44.5)	3.01 (76.5)

① *When using plug, collar is not required.*

Caps

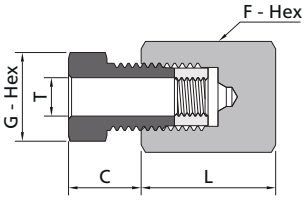

Tube					
T - Tube O.D. in.	Ordering Number	Dimensions, in. (mm)			
		L	C	G	F
1/4	SS-MTC-MF4	0.81 (20.6)	0.38 (9.7)	0.50 (12.7)	0.63 (15.9)
3/8	SS-MTC-MF6	1.13 (28.6)	0.44 (11.2)	0.63 (15.9)	0.75 (19.1)
9/16	SS-MTC-MF9	1.38 (34.9)	0.55 (14.0)	0.94 (23.8)	1.00 (25.4)
3/4	SS-MTC-MF12	1.75 (44.5)	0.60 (15.2)	1.19 (30.2)	1.38 (34.9)
1	SS-MTC-MF16	2.25 (57.2)	0.74 (18.7)	1.38 (34.9)	1.75 (44.5)
1 1/2	SS-MTC-MF24	3.09 (78.5)	1.12 (28.5)	1.87 (47.6)	2.25 (57.2)

Unions

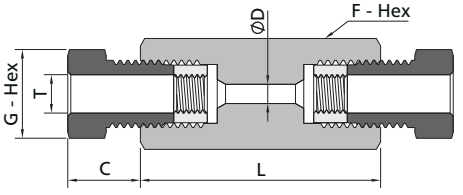

Tube						
T - Tube O.D. in.	Ordering Number	Dimensions, in. (mm)				
		L	C	D	G	F
1/4	SS-MU-MF4	1.62 (41.1)	0.38 (9.7)	0.11 (2.8)	0.50 (12.7)	0.63 (15.9)
3/8	SS-MU-MF6	1.75 (44.5)	0.44 (11.2)	0.20 (5.2)	0.63 (15.9)	0.75 (19.1)
9/16	SS-MU-MF9	2.14 (54.3)	0.55 (14.0)	0.31 (7.9)	0.94 (23.8)	1.00 (25.4)
3/4	SS-MU-MF12	2.50 (63.5)	0.60 (15.2)	0.44 (11.1)	1.19 (30.2)	1.38 (34.9)
1	SS-MU-MF16	3.50 (88.9)	0.74 (18.7)	0.56 (14.3)	1.38 (34.9)	1.75 (44.5)
1 1/2	SS-MU-MF24	5.00 (127.0)	1.12 (28.5)	0.94 (23.8)	1.87 (47.6)	2.25 (57.2)

Reducing Unions

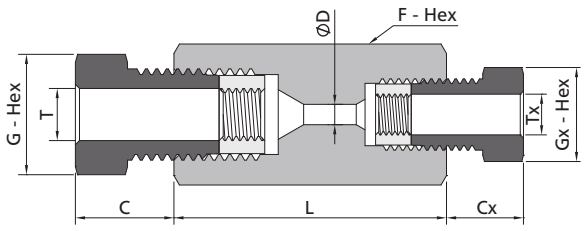

Tube								
T - Tube O.D. in.	Tx - Tube O.D. in.	Ordering Number	Dimensions, in. (mm)					
			L	C	Cx	D	G	Gx	F
3/8	1/4	SS-MU-MF6-MF4	1.75 (44.5)	0.44 (11.2)	0.38 (9.7)	0.11 (2.8)	0.63 (15.9)	0.50 (12.7)	0.75 (19.1)
9/16	1/4	SS-MU-MF9-MF4	2.00 (50.8)	0.55 (14.0)	0.38 (9.7)	0.11 (2.8)	0.94 (23.8)	0.50 (12.7)	1.00 (25.4)
9/16	3/8	SS-MU-MF9-MF6	2.00 (50.8)	0.55 (14.0)	0.44 (11.2)	0.20 (5.2)	0.94 (23.8)	0.63 (15.9)	1.00 (25.4)
3/4	1/4	SS-MU-MF12-MF4	2.25 (57.2)	0.60 (15.2)	0.38 (9.7)	0.11 (2.8)	1.19 (30.2)	0.50 (12.7)	1.38 (34.9)
3/4	3/8	SS-MU-MF12-MF6	2.25 (57.2)	0.60 (15.2)	0.44 (11.2)	0.20 (5.2)	1.19 (30.2)	0.63 (15.9)	1.38 (34.9)
3/4	9/16	SS-MU-MF12-MF9	2.50 (63.5)	0.60 (15.2)	0.55 (14.0)	0.31 (7.9)	1.19 (30.2)	0.94 (23.8)	1.38 (34.9)
1	1/4	SS-MU-MF16-MF4	2.75 (69.9)	0.74 (18.7)	0.38 (9.7)	0.11 (2.8)	1.38 (34.9)	0.50 (12.7)	1.75 (44.5)
1	3/8	SS-MU-MF16-MF6	2.88 (73.0)	0.74 (18.7)	0.44 (11.2)	0.20 (5.2)	1.38 (34.9)	0.63 (15.9)	1.75 (44.5)
1	9/16	SS-MU-MF16-MF9	3.00 (76.2)	0.74 (18.7)	0.55 (14.0)	0.31 (7.9)	1.38 (34.9)	0.94 (23.8)	1.75 (44.5)
1	3/4	SS-MU-MF16-MF12	3.00 (76.2)	0.74 (18.7)	0.60 (15.2)	0.44 (11.1)	1.38 (34.9)	1.19 (30.2)	1.75 (44.5)

Unions (Slip Type)

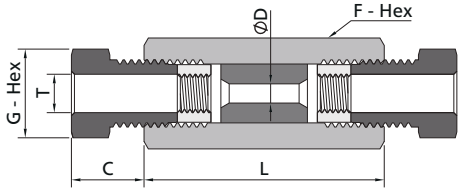

Tube							
T - Tube O.D. in.	Ordering Number	Dimensions, in. (mm)				
		L	C	D	G	F
1/4	SS-MSU-MF4	1.62 (41.1)	0.38 (9.7)	0.11 (2.8)	0.50 (12.7)	0.63 (15.9)
3/8	SS-MSU-MF6	1.75 (44.5)	0.44 (11.2)	0.20 (5.2)	0.63 (15.9)	0.75 (19.1)
9/16	SS-MSU-MF9	2.14 (54.3)	0.55 (14.0)	0.31 (7.9)	0.94 (23.8)	1.00 (25.4)
3/4	SS-MSU-MF12	2.50 (63.5)	0.60 (15.2)	0.44 (11.1)	1.19 (30.2)	1.38 (34.9)
1	SS-MSU-MF16	3.50 (88.9)	0.74 (18.7)	0.56 (14.3)	1.38 (34.9)	1.75 (44.5)

Bulkhead Unions

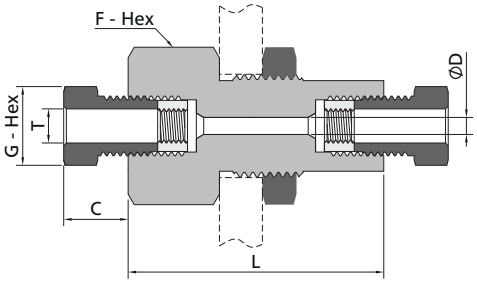

Tube								
T - Tube O.D. in.	Ordering Number	Dimensions, in. (mm)						
		L	C	D	G	F	Panel Hole Size	Max. Panel Thickness
1/4	SS-MBU-MF4	1.88 (47.8)	0.38 (9.7)	0.11 (2.8)	0.50 (12.7)	1.00 (25.4)	0.81 (20.6)	0.38 (9.7)
3/8	SS-MBU-MF6	2.00 (50.8)	0.44 (11.2)	0.20 (5.2)	0.63 (15.9)	1.06 (27.0)	0.94 (23.9)	0.38 (9.7)
9/16	SS-MBU-MF9	2.38 (60.5)	0.55 (14.0)	0.31 (7.9)	0.94 (23.8)	1.38 (34.9)	1.13 (28.6)	0.38 (9.7)
3/4	SS-MBU-MF12	2.62 (66.5)	0.60 (15.2)	0.44 (11.1)	1.19 (30.2)	1.88 (47.6)	1.69 (42.9)	0.38 (9.7)
1	SS-MBU-MF16	3.50 (88.9)	0.74 (18.7)	0.56 (14.3)	1.38 (34.9)	2.13 (54.0)	1.94 (49.3)	0.38 (9.7)

Union Elbows

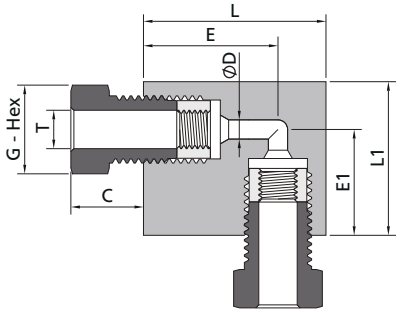

Tube									
T - Tube O.D. in.	Ordering Number	Dimensions, in. (mm)							
		C	D	G	L	E	L1	E1	Thickness
1/4	SS-MLU-MF4	0.38 (9.7)	0.11 (2.8)	0.50 (12.7)	1.12 (28.4)	0.75 (19.1)	1.12 (28.4)	0.75 (19.1)	0.63 (15.9)
3/8	SS-MLU-MF6	0.44 (11.2)	0.20 (5.2)	0.63 (15.9)	1.38 (34.9)	1.00 (25.4)	1.38 (34.9)	1.00 (25.4)	0.75 (19.1)
9/16	SS-MLU-MF9	0.55 (14.0)	0.31 (7.9)	0.94 (23.8)	1.75 (44.5)	1.25 (31.8)	1.75 (44.5)	1.25 (31.8)	1.00 (25.4)
3/4	SS-MLU-MF12	0.60 (15.2)	0.44 (11.1)	1.19 (30.2)	2.25 (57.2)	1.50 (38.1)	2.25 (57.2)	1.50 (38.1)	1.38 (34.9)
1	SS-MLU-MF16	0.74 (18.7)	0.56 (14.3)	1.38 (34.9)	3.00 (76.2)	2.06 (52.3)	3.00 (76.2)	2.06 (52.3)	1.75 (44.5)
1 1/2	SS-MLU-MF24	1.12 (28.5)	0.94 (23.8)	1.87 (47.6)	4.00 (101.6)	2.87 (73.0)	4.00 (101.6)	2.87 (73.0)	2.25 (57.2)

Union Tees

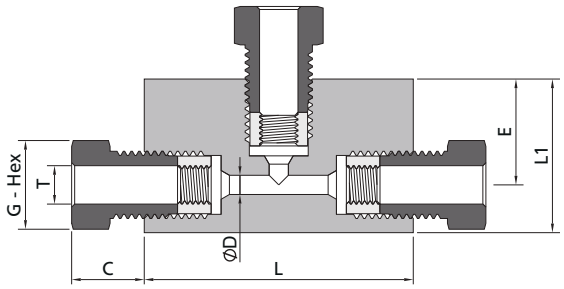

Tube								
T - Tube O.D. in.	Ordering Number	Dimensions, in. (mm)						
		C	D	G	L	L1	E	Thickness
1/4	SS-MT-MF4	0.38 (9.7)	0.11 (2.8)	0.50 (12.7)	1.50 (38.1)	1.12 (28.4)	0.75 (19.1)	0.63 (15.9)
3/8	SS-MT-MF6	0.44 (11.2)	0.20 (5.2)	0.63 (15.9)	2.00 (50.8)	1.38 (34.9)	1.00 (25.4)	0.75 (19.1)
9/16	SS-MT-MF9	0.55 (14.0)	0.31 (7.9)	0.94 (23.8)	2.50 (63.5)	1.75 (44.5)	1.25 (31.8)	1.00 (25.4)
3/4	SS-MT-MF12	0.60 (15.2)	0.44 (11.1)	1.19 (30.2)	3.00 (76.2)	2.25 (57.2)	1.50 (38.1)	1.38 (34.9)
1	SS-MT-MF16	0.74 (18.7)	0.56 (14.3)	1.38 (34.9)	4.12 (104.6)	3.00 (76.2)	2.06 (52.3)	1.75 (44.5)
1 1/2	SS-MT-MF24	1.12 (28.5)	0.94 (23.8)	1.87 (47.6)	5.75 (146.0)	4.00 (101.6)	2.87 (73.0)	2.25 (57.2)

Union Crosses

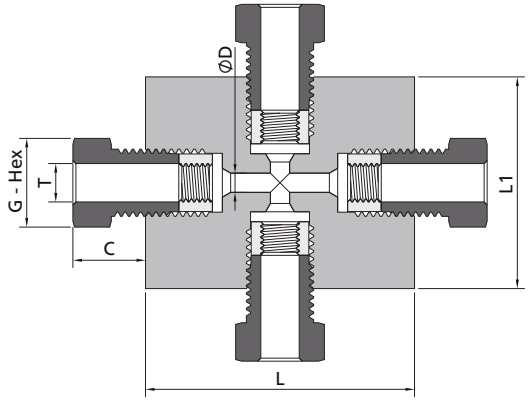

Tube							
T - Tube O.D. in.	Ordering Number	Dimensions, in. (mm)					
		C	D	G	L	L1	Thickness
1/4	SS-MX-MF4	0.38 (9.7)	0.11 (2.8)	0.50 (12.7)	1.50 (38.1)	1.50 (38.1)	0.63 (15.9)
3/8	SS-MX-MF6	0.44 (11.2)	0.20 (5.2)	0.63 (15.9)	2.00 (50.8)	2.00 (50.8)	0.75 (19.1)
9/16	SS-MX-MF9	0.55 (14.0)	0.31 (7.9)	0.94 (23.8)	2.50 (63.5)	2.50 (63.5)	1.00 (25.4)
3/4	SS-MX-MF12	0.60 (15.2)	0.44 (11.1)	1.19 (30.2)	3.00 (76.2)	3.00 (76.2)	1.38 (34.9)
1	SS-MX-MF16	0.74 (18.7)	0.56 (14.3)	1.38 (34.9)	4.12 (104.6)	4.12 (104.6)	1.75 (44.5)
1 1/2	SS-MX-MF24	1.12 (28.5)	0.94 (23.8)	1.87 (47.6)	5.57 (146.0)	5.57 (146.0)	2.25 (57.2)

Anti-Vibration Gland Assemblies

Working pressure: 20,000 psig (1379 bar)

Tubing systems may be subject to extreme vibration or shock. In such applications, these assemblies provide the same reliable connection as standard FITOK glands to essentially prolong vibrational fatigue life.

A complete ordering number for anti-vibration gland assembly (for example: SS-MAV-MF4) includes gland nut, slotted collet and collet body. These three parts can also be ordered separately, as shown in the tables below. To order components with anti-vibration gland assemblies, add "-AV" to ordering number.

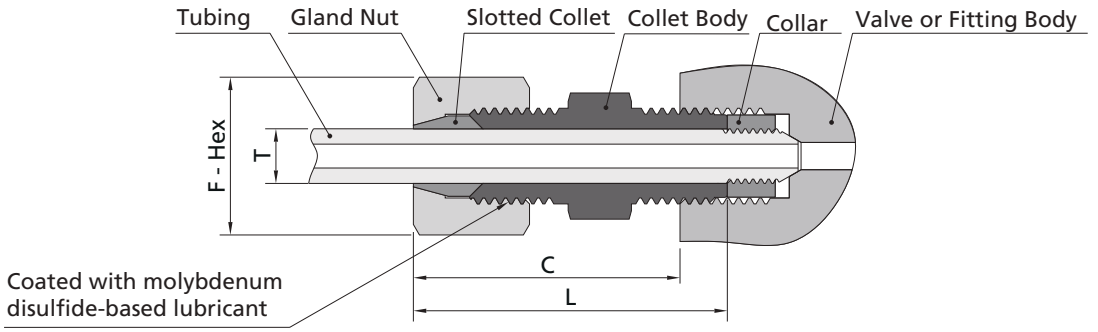

Tube					
Anti-Vibration Gland Assemblies	T - Tube O.D. in.	Ordering Number	Dimensions, in. (mm)		
			L	C	F
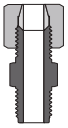	1/4	SS-MAV-MF4	1.24 (31.6)	1.05 (26.7)	0.63 (15.9)
	3/8	SS-MAV-MF6	1.50 (38.1)	1.22 (30.9)	0.81 (20.6)
	9/16	SS-MAV-MF9	1.78 (45.2)	1.42 (36.0)	0.94 (23.8)
	3/4	SS-MAV-MF12	2.00 (50.8)	1.61 (40.8)	1.38 (34.9)
	1	SS-MAV-MF16	2.38 (60.5)	1.74 (44.3)	1.50 (38.1)

Installation Instructions

Please see A-112.

Connection Information

Please see A-02.

Ordering Number Description

SS – MU – MF16 – □ – □ – □

Material

SS	316 SS

Fitting Type

MG	Gland
MCO	Collar
MTP	Plug
MTC	Cap
MU	Union or Reducing Union
MSU	Union (Slip Type)
MBU	Bulkhead Union
MLU	Union Elbow
MT	Union Tee
MX	Union Cross
MAV	Anti-vibration Gland Assembly

P1 Type

MF	Female Medium Pressure

P1 Size

4	1/4"
6	3/8"
9	9/16"
12	3/4"
16	1"
24	1 1/2"

P2, P3 and P4

Specified in the same way as the P1

Notes: 1. For more details regarding Medium Pressure connection, please see **Connection Information** on A-02.
2. "Ordering Number Description" is a reference to understand the combination rules of FITOK product part number. Not all combinations are available.

60H Series High Pressure Fittings

60,000 psig (4137 bar)



Contents

Glands - HG



A-32

Collars - HCO



A-32

Plugs - HTP



A-32

Caps - HTC



A-33

Unions - HU

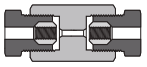

A-33

Reducing Unions - HU

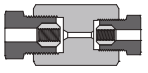

A-33

Unions (Slip Type) - HSU

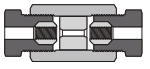

A-34

Bulkhead Unions - HBU

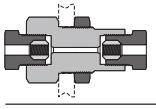

A-34

Union Elbows - HLU

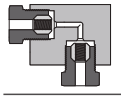

A-34

Union Tees - HT

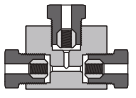

A-35

Union Crosses - HX

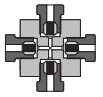

A-35

Anti-vibration Gland Assemblies - HAV

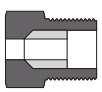

A-35

Installation Instructions A-112

Connection Information A-02

Ordering Number Description A-36

Features

- Working pressure: 60,000 psig (4137 bar)
- Working temperature range: -423°F to 1200°F (-252°C to 649°C)
- Use with T60H series tubing as standard, tubing sizes available in 1/4", 3/8" and 9/16"
- High tensile 316 stainless steel material
- Every fitting marked with size, material and trace ID

Construction

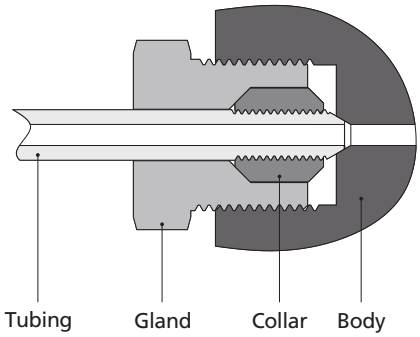

Ordering Information and Dimensions

Dimensions are for reference only and are subject to change.

Glands

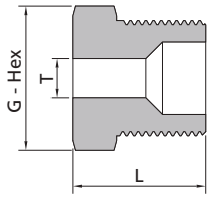

Tube			
T - Tube O.D. in.	Ordering Number	Dimensions, in. (mm)	
		G	L
1/4	SS-HG-HF4	0.63 (15.9)	0.82 (20.8)
3/8	SS-HG-HF6	0.81 (20.6)	1.13 (28.7)
9/16	SS-HG-HF9	1.19 (30.2)	1.50 (38.1)

Collars

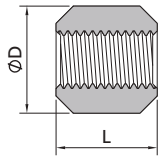

Tube			
T - Tube O.D. in.	Ordering Number	Dimensions, in. (mm)	
		D	L
1/4	SS-HCO-HF4	0.38 (9.6)	0.38 (9.6)
3/8	SS-HCO-HF6	0.50 (12.7)	0.54 (13.7)
9/16	SS-HCO-HF9	0.81 (20.6)	0.62 (15.8)

Plugs ①

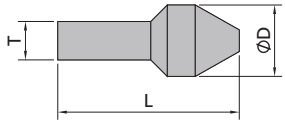

Tube			
T - Tube O.D. in.	Ordering Number	Dimensions, in. (mm)	
		D	L
1/4	SS-HTP-HF4	0.38 (9.6)	1.04 (26.4)
3/8	SS-HTP-HF6	0.50 (12.7)	1.35 (34.3)
9/16	SS-HTP-HF9	0.81 (20.6)	1.89 (48.0)

① *When using plug, collar is not required.*

Caps

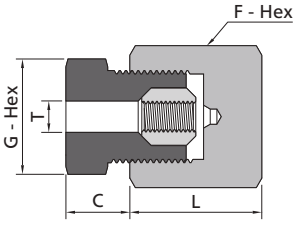

Tube					
T - Tube O.D. in.	Ordering Number	Dimensions, in. (mm)			
		L	C	G	F
1/4	SS-HTC-HF4	0.75 (19.1)	0.47 (11.9)	0.63 (15.9)	0.75 (19.1)
3/8	SS-HTC-HF6	1.13 (28.6)	0.61 (15.6)	0.81 (20.6)	1.00 (25.4)
9/16	SS-HTC-HF9	1.38 (34.9)	0.95 (24.1)	1.19 (30.2)	1.38 (34.9)

Unions

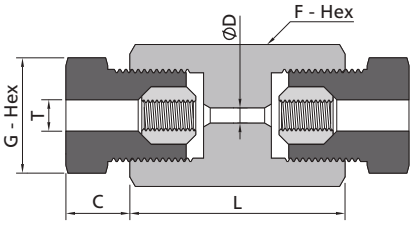

Tube						
T - Tube O.D. in.	Ordering Number	Dimensions, in. (mm)				
		L	C	D	G	F
1/4	SS-HU-HF4	1.38 (34.9)	0.47 (11.9)	0.09 (2.4)	0.63 (15.9)	0.75 (19.1)
3/8	SS-HU-HF6	1.75 (44.5)	0.61 (15.6)	0.13 (3.2)	0.81 (20.6)	1.00 (25.4)
9/16	SS-HU-HF9	2.19 (55.6)	0.95 (24.1)	0.19 (4.8)	1.19 (30.2)	1.38 (34.9)

Reducing Unions

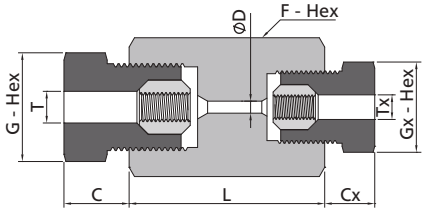

Tube									
T - Tube O.D. in.	Tx - Tube O.D. in.	Ordering Number	Dimensions, in. (mm)						
			L	C	Cx	D	G	Gx	F
3/8	1/4	SS-HU-HF6-HF4	1.63 (41.3)	0.61 (15.6)	0.47 (11.9)	0.09 (2.4)	0.81 (20.6)	0.63 (15.9)	1.00 (25.4)
9/16	1/4	SS-HU-HF9-HF4	1.75 (44.5)	0.95 (24.1)	0.47 (11.9)	0.09 (2.4)	1.19 (30.2)	0.63 (15.9)	1.38 (34.9)
9/16	3/8	SS-HU-HF9-HF6	2.00 (50.8)	0.95 (24.1)	0.61 (15.6)	0.13 (3.2)	1.19 (30.2)	0.81 (20.6)	1.38 (34.9)

Unions (Slip Type)

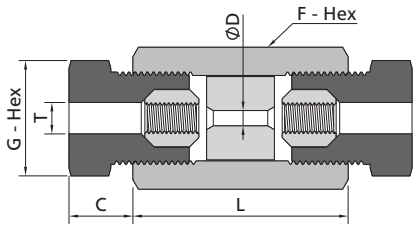

Tube						
T - Tube O.D. in.	Ordering Number	Dimensions, in. (mm)				
		L	C	D	G	F
1/4	SS-HSU-HF4	1.38 (34.9)	0.47 (11.9)	0.09 (2.4)	0.63 (15.9)	0.75 (19.1)
3/8	SS-HSU-HF6	1.75 (44.5)	0.61 (15.6)	0.13 (3.2)	0.81 (20.6)	1.00 (25.4)
9/16	SS-HSU-HF9	2.19 (55.6)	0.95 (24.1)	0.19 (4.8)	1.19 (30.2)	1.38 (34.9)

Bulkhead Unions

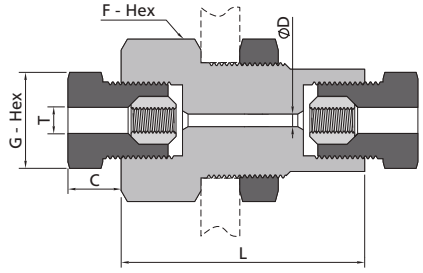

Tube								
T - Tube O.D. in.	Ordering Number	Dimensions, in. (mm)						
		L	C	D	G	F	Panel Hole Size	Max. Panel Thickness
1/4	SS-HBU-HF4	1.88 (47.8)	0.47 (11.9)	0.09 (2.4)	0.63 (15.9)	1.06 (27.0)	0.94 (23.9)	0.38 (9.7)
3/8	SS-HBU-HF6	2.38 (60.5)	0.61 (15.6)	0.13 (3.2)	0.81 (20.6)	1.38 (34.9)	1.13 (28.6)	0.38 (9.7)
9/16	SS-HBU-HF9	2.75 (69.9)	0.95 (24.1)	0.19 (4.8)	1.19 (30.2)	1.88 (47.6)	1.69 (42.9)	0.38 (9.7)

Union Elbows

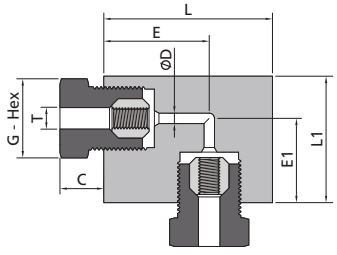

Tube									
T - Tube O.D. in.	Ordering Number	Dimensions, in. (mm)							
		C	D	G	L	E	L1	E1	Thickness
1/4	SS-HLU-HF4	0.47 (11.9)	0.09 (2.4)	0.63 (15.9)	1.50 (38.1)	0.88 (22.4)	1.00 (25.4)	0.62 (15.7)	0.75 (19.1)
3/8	SS-HLU-HF6	0.61 (15.6)	0.13 (3.2)	0.81 (20.6)	2.00 (50.8)	1.25 (31.8)	1.50 (38.1)	1.00 (25.4)	1.00 (25.4)
9/16	SS-HLU-HF9	0.95 (24.1)	0.19 (4.8)	1.19 (30.2)	2.62 (66.5)	1.88 (47.8)	1.88 (47.8)	1.12 (28.4)	1.50 (38.1)

Union Tees

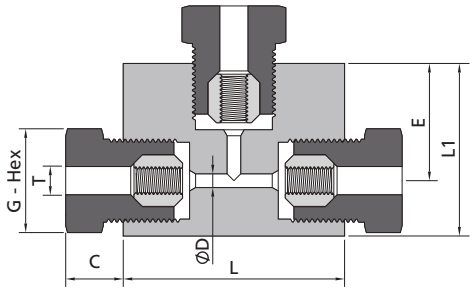

Tube								
T - Tube O.D. in.	Ordering Number	Dimensions, in. (mm)						
		C	D	G	L	L1	E	Thickness
1/4	SS-HT-HF4	0.47 (11.9)	0.09 (2.4)	0.63 (15.9)	2.00 (50.8)	1.25 (31.8)	0.88 (22.4)	0.75 (19.1)
3/8	SS-HT-HF6	0.61 (15.6)	0.13 (3.2)	0.81 (20.6)	2.00 (50.8)	1.56 (39.6)	1.06 (26.9)	1.00 (25.4)
9/16	SS-HT-HF9	0.95 (24.1)	0.19 (4.8)	1.19 (30.2)	2.62 (66.5)	2.12 (53.8)	1.38 (35.0)	1.50 (38.1)

Union Crosses

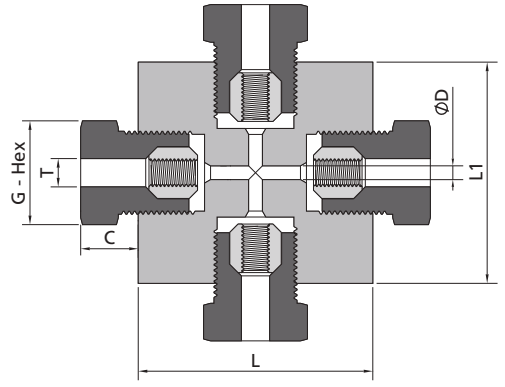

Tube							
T - Tube O.D. in.	Ordering Number	Dimensions, in. (mm)					
		C	D	G	L	L1	Thickness
1/4	SS-HX-HF4	0.47 (11.9)	0.09 (2.4)	0.63 (15.9)	2.00 (50.8)	1.25 (31.8)	0.75 (19.1)
3/8	SS-HX-HF6	0.61 (15.6)	0.13 (3.2)	0.81 (20.6)	2.00 (50.8)	2.12 (53.8)	1.00 (25.4)
9/16	SS-HX-HF9	0.95 (24.1)	0.19 (4.8)	1.19 (30.2)	2.62 (66.5)	2.75 (69.9)	1.50 (38.1)

Anti-Vibration Gland Assemblies

Working pressure: 60,000 psig (4137 bar)

Tubing systems may be subject to extreme vibration or shock. In such applications, these assemblies provide the same reliable connection as standard FITOK glands to essentially prolong vibrational fatigue life.

A complete ordering number for anti-vibration gland assembly (for example: SS-HAV-HF4) includes gland nut and slotted collet. These two parts can also be ordered separately, as shown in the tables below. To order components with anti-vibration gland assemblies, add "-AV" to ordering number.

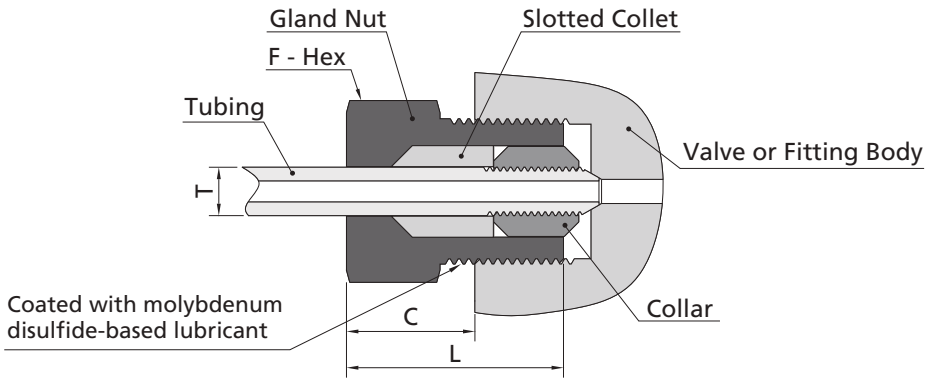

Tube					
Anti-vibration Gland Assemblies	T - Tube O.D. in.	Ordering Number	Dimensions, in. (mm)		
			L	C	F
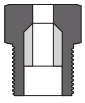	1/4	SS-HAV-HF4	0.81 (20.6)	0.47 (11.9)	0.63 (15.9)
	3/8	SS-HAV-HF6	1.12 (28.4)	0.61 (15.6)	0.81 (20.6)
	9/16	SS-HAV-HF9	1.50 (38.1)	0.95 (24.1)	1.19 (30.2)

Installation Instructions

Please see A-112.

Connection Information

Please see A-02.

Ordering Number Description

SS – HU – HF6 – □ – □ – □

Material	
SS	316 SS

Fitting Type	
HG	Gland
HCO	Collar
HTP	Plug
HTC	Cap
HU	Union or Reducing Union
HSU	Union (Slip Type)
HBU	Bulkhead Union
HLU	Union Elbow
HT	Union Tee
HX	Union Cross
HAV	Anti-vibration Gland Assembly

P1 Type	
HF	Female High Pressure

P1 Size	
4	1/4"
6	3/8"
9	9/16"

P2, P3 and P4
Specified in the same way as the P1

Notes: 1. For more details regarding High Pressure connection, please see **Connection Information** on A-02.
2. "Ordering Number Description" is a reference to understand the combination rules of FITOK product part number. Not all combinations are available.

PMH Series Pipe Fittings

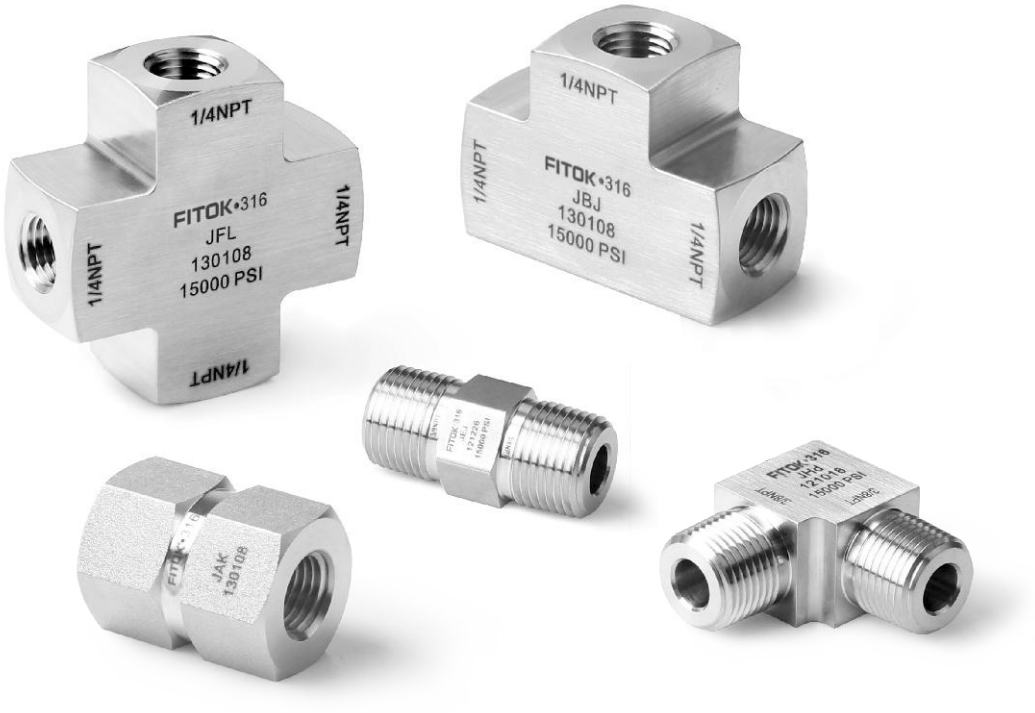

Contents

Pipe Plugs - HPP

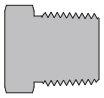

A-40

Hex Nipples - HPN

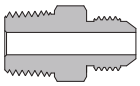

A-41

Hex Long Nipples - HPL



A-48

Pipe Caps - HPC



A-49

Pipe Cap Assemblies (Moveable Insert) - HMC

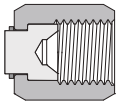

A-50

Hex Couplings - HPG



A-52

Zero-Clearance Unions - HPZ

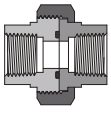

A-55

Adapters - HPA

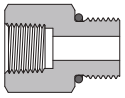

A-56

Male Elbows - HPE

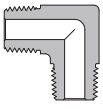

A-63

Street Elbows - HPE

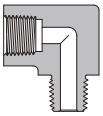

A-64

Female Elbows - HPE

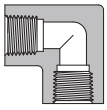

A-65

Male Tees - HPT

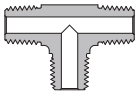

A-66

Male Street Tees - HPT

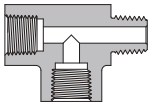

A-66

Male Branch Tees - HPT

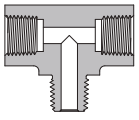

A-67

Female Tees - HPT

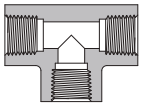

A-67

Female Crosses - HPX

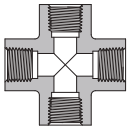

A-68

Connection Information A-02

Ordering Number Description A-69

Features

◎ High tensile 316 stainless steel as standard material, other materials available upon request
◎ The hardened threads with smooth surface finishing avoid galling and help to extend the fitting service life
◎ Radius junction design for elbows provides smooth flow path
◎ Every fitting marked with size, material and trace ID

Thread Specifications

Connection Type	Designator	Thread Type	Thread Specification
Male NPT	NS	NPT	ASME B1.20.1, SAE AS71051
Female NPT	FNS		
Male ISO Tapered Thread	RT	ISO Tapered	ISO 7-1, BS EN 10226-1, DIN EN 10226-1, JIS B0203
Female ISO Tapered Thread	FRT		
Male JIC	JM	SAE/MS	ASME B1.1
Female JIC	JF		
Male SAE O-Ring	SH		
Female SAE O-Ring	US		
Male Type "M"	TM		
Male ISO Parallel Thread	HBP	ISO Parallel	ISO 228-1, DIN ISO 228-1, JIS B0202, BS2779
Female ISO Parallel Thread	SBP, HSBP		

① *For more information, please refer to **Technical Information** on Page A-02.*

Working Pressure

The working pressures of pipe fittings are shown in the **"Ordering Information and Dimensions"**.

Working Temperature

Connection Type	Working Temperature Range
Male or Female NPT	-325°F to 400°F (-198°C to 204°C)①
Male or Female ISO Tapered Thread	-325°F to 400°F (-198°C to 204°C)①
Male or Female JIC	-423°F to 1200°F (-252°C to 649°C)
Male SAE O-Ring	0°F to 400°F (-17.8°C to 204°C)②
Female SAE O-Ring	-50°F to 550°F (-45°C to 288°C)
Male Type "M"	-423°F to 1200°F (-252°C to 649°C)
ISO Parallel Thread	-423°F to 1200°F (-252°C to 649°C)

① *The data are based on the working temperature range of the thread sealants. For the working temperature above 400°F (204°C), please contact FITOK Group or our authorized distributors.*
② *The ends are supplied with a Fluorocarbon FKM O-ring as standard, other materials of O-rings available.*

Cautions

◎ Do not loosen or tighten fittings when the system is pressurized.
◎ Always use proper thread sealants on tapered pipe threads. FITOK PTFE thread seal tapes are available. For more details, see Page A-90 of the **6D Series Tube Fittings** catalog.

Ordering Information and Dimensions

Dimensions are for reference only and are subject to change.

Pipe Plugs

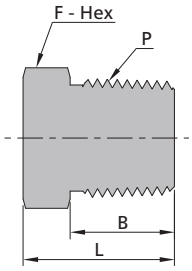

Male NPT Threads

P-NPT Size, in.	Ordering Number	Dimensions, in. (mm)			Working Pressure psig (bar)
		L	F	B	
1/8	SS-HPP-NS2	0.63 (16.0)	0.44 (11.1)	0.38 (9.7)	15000 (1034)
1/4	SS-HPP-NS4	0.87 (22.2)	0.56 (14.3)	0.56 (14.2)	15000 (1034)
3/8	SS-HPP-NS6	0.93 (23.6)	0.69 (17.5)	0.56 (14.2)	15000 (1034)
1/2	SS-HPP-NS8	1.16 (29.5)	0.87 (22.2)	0.75 (19.1)	15000 (1034)
3/4	SS-HPP-NS12	1.25 (31.8)	1.06 (27.0)	0.75 (19.1)	10000 (690)
1	SS-HPP-NS16	1.55 (39.3)	1.37 (34.9)	0.94 (23.9)	10000 (690)

Male ISO Tapered Threads

P-ISO Thread Size, in.	Ordering Number	Dimensions, in. (mm)			Working Pressure psig (bar)
		L	F	B	
1/8	SS-HPP-RT2	0.63 (16.0)	0.44 (11.1)	0.38 (9.7)	15000 (1034)
1/4	SS-HPP-RT4	0.87 (22.2)	0.56 (14.3)	0.56 (14.2)	15000 (1034)
3/8	SS-HPP-RT6	0.93 (23.6)	0.69 (17.5)	0.56 (14.2)	15000 (1034)
1/2	SS-HPP-RT8	1.16 (29.5)	0.87 (22.2)	0.75 (19.1)	15000 (1034)
3/4	SS-HPP-RT12	1.25 (31.8)	1.06 (27.0)	0.75 (19.1)	10000 (690)
1	SS-HPP-RT16	1.55 (39.3)	1.37 (34.9)	0.94 (23.9)	10000 (690)

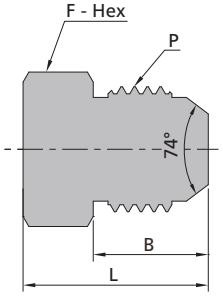

Male JIC

P-JIC Size, in.	Ordering Number	Dimensions, in. (mm)			Working Pressure psig (bar)
		L	F	B	
1/4	SS-HPP-JM4	0.83 (21.0)	0.50 (12.7)	0.55 (14.0)	20000 (1379)
3/8	SS-HPP-JM6	0.89 (22.7)	0.63 (15.9)	0.56 (14.1)	20000 (1379)
1/2	SS-HPP-JM8	1.05 (26.7)	0.81 (20.6)	0.66 (16.7)	20000 (1379)
5/8	SS-HPP-JM10	1.19 (30.3)	0.94 (23.8)	0.76 (19.3)	20000 (1379)
3/4	SS-HPP-JM12	1.37 (34.9)	1.13 (28.6)	0.86 (21.9)	15000 (1034)
1	SS-HPP-JM16	1.51 (38.3)	1.37 (34.9)	0.91 (23.1)	15000 (1034)

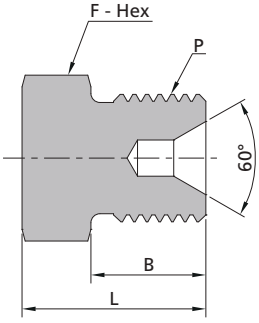

Male Type "M"

P-SAE/MS Thread Size, in.	Ordering Number	Dimensions, in. (mm)			Working Pressure psig (bar)
		L	F	B	
9/16-18	SS-HPP-TM9	0.84 (21.3)	0.63 (15.9)	0.50 (12.7)	60000 (4137)
3/4-16	SS-HPP-TM12	1.01 (25.6)	0.75 (19.1)	0.63 (16.0)	30000 (2068)
7/8-14	SS-HPP-TM14	1.21 (30.8)	1.00 (25.4)	0.76 (19.2)	50000 (3447)
1-12	SS-HPP-TM16	1.10 (27.9)	1.00 (25.4)	0.64 (16.3)	30000 (2068)
1 5/16-12	SS-HPP-TM21	1.22 (30.9)	1.37 (34.9)	0.62 (15.7)	20000 (1379)

Hex Nipples

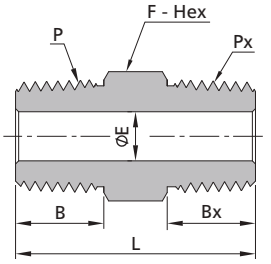

Male NPT Threads

P-NPT Size, in.	Px-NPT Size, in.	Ordering Number	Dimensions, in. (mm)					Working Pressure psig (bar)
			L	F	B	Bx	E	
1/8	1/8	SS-HPN-NS2	1.05 (26.6)	0.44 (11.1)	0.38 (9.7)	0.38 (9.7)	0.19 (4.8)	15000 (1034)
1/4	1/8	SS-HPN-NS4-NS2	1.30 (32.9)	0.56 (14.3)	0.56 (14.2)	0.38 (9.7)	0.19 (4.8)	15000 (1034)
1/4	1/4	SS-HPN-NS4	1.47 (37.4)	0.56 (14.3)	0.56 (14.2)	0.56 (14.2)	0.25 (6.4)	15000 (1034)
3/8	1/8	SS-HPN-NS6-NS2	1.34 (34.1)	0.69 (17.5)	0.56 (14.2)	0.38 (9.7)	0.19 (4.8)	15000 (1034)
3/8	1/4	SS-HPN-NS6-NS4	1.52 (38.6)	0.69 (17.5)	0.56 (14.2)	0.56 (14.2)	0.25 (6.4)	15000 (1034)
3/8	3/8	SS-HPN-NS6	1.52 (38.6)	0.69 (17.5)	0.56 (14.2)	0.56 (14.2)	0.31 (7.9)	15000 (1034)
1/2	1/8	SS-HPN-NS8-NS2	1.58 (40.2)	0.87 (22.2)	0.75 (19.1)	0.38 (9.7)	0.19 (4.8)	15000 (1034)
1/2	1/4	SS-HPN-NS8-NS4	1.76 (44.7)	0.87 (22.2)	0.75 (19.1)	0.56 (14.2)	0.25 (6.4)	15000 (1034)
1/2	3/8	SS-HPN-NS8-NS6	1.76 (44.7)	0.87 (22.2)	0.75 (19.1)	0.56 (14.2)	0.31 (7.9)	15000 (1034)
1/2	1/2	SS-HPN-NS8	1.95 (49.6)	0.87 (22.2)	0.75 (19.1)	0.75 (19.1)	0.38 (9.6)	15000 (1034)
3/4	1/8	SS-HPN-NS12-NS2	1.67 (42.4)	1.06 (27.0)	0.75 (19.1)	0.38 (9.7)	0.22 (5.5)	10000 (690)
3/4	1/4	SS-HPN-NS12-NS4	1.85 (46.9)	1.06 (27.0)	0.75 (19.1)	0.56 (14.2)	0.28 (7.1)	10000 (690)
3/4	3/8	SS-HPN-NS12-NS6	1.85 (46.9)	1.06 (27.0)	0.75 (19.1)	0.56 (14.2)	0.38 (9.6)	10000 (690)
3/4	1/2	SS-HPN-NS12-NS8	2.04 (51.8)	1.06 (27.0)	0.75 (19.1)	0.75 (19.1)	0.47 (11.9)	10000 (690)
3/4	3/4	SS-HPN-NS12	2.04 (51.8)	1.06 (27.0)	0.75 (19.1)	0.75 (19.1)	0.58 (14.8)	10000 (690)
1	1/8	SS-HPN-NS16-NS2	1.96 (49.8)	1.37 (34.9)	0.94 (23.9)	0.38 (9.7)	0.22 (5.5)	10000 (690)
1	1/4	SS-HPN-NS16-NS4	2.14 (54.3)	1.37 (34.9)	0.94 (23.9)	0.56 (14.2)	0.28 (7.1)	10000 (690)
1	3/8	SS-HPN-NS16-NS6	2.14 (54.3)	1.37 (34.9)	0.94 (23.9)	0.56 (14.2)	0.38 (9.6)	10000 (690)
1	1/2	SS-HPN-NS16-NS8	2.33 (59.2)	1.37 (34.9)	0.94 (23.9)	0.75 (19.1)	0.47 (11.9)	10000 (690)
1	3/4	SS-HPN-NS16-NS12	2.33 (59.2)	1.37 (34.9)	0.94 (23.9)	0.75 (19.1)	0.58 (14.8)	10000 (690)
1	1	SS-HPN-NS16	2.52 (64.0)	1.37 (34.9)	0.94 (23.9)	0.94 (23.9)	0.79 (20.0)	10000 (690)

Hex Nipples

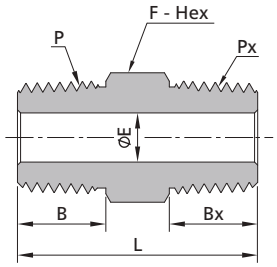

Male NPT Threads								Male ISO Tapered Threads
P-NPT Size, in.	Px-ISO Thread Size, in.	Ordering Number	Dimensions, in. (mm)					Working Pressure psig (bar)
			L	F	B	Bx	E	
1/8	1/8	SS-HPN-NS2-RT2	1.05 (26.6)	0.44 (11.1)	0.38 (9.7)	0.38 (9.7)	0.19 (4.8)	15000 (1034)
1/4	1/8	SS-HPN-NS4-RT2	1.30 (32.9)	0.56 (14.3)	0.56 (14.2)	0.38 (9.7)	0.19 (4.8)	15000 (1034)
1/4	1/4	SS-HPN-NS4-RT4	1.47 (37.4)	0.56 (14.3)	0.56 (14.2)	0.56 (14.2)	0.25 (6.4)	15000 (1034)
3/8	1/8	SS-HPN-NS6-RT2	1.34 (34.1)	0.69 (17.5)	0.56 (14.2)	0.38 (9.7)	0.19 (4.8)	15000 (1034)
3/8	1/4	SS-HPN-NS6-RT4	1.52 (38.6)	0.69 (17.5)	0.56 (14.2)	0.56 (14.2)	0.25 (6.4)	15000 (1034)
3/8	3/8	SS-HPN-NS6-RT6	1.52 (38.6)	0.69 (17.5)	0.56 (14.2)	0.56 (14.2)	0.31 (7.9)	15000 (1034)
1/2	1/8	SS-HPN-NS8-RT2	1.58 (40.2)	0.87 (22.2)	0.75 (19.1)	0.38 (9.7)	0.19 (4.8)	15000 (1034)
1/2	1/4	SS-HPN-NS8-RT4	1.76 (44.7)	0.87 (22.2)	0.75 (19.1)	0.56 (14.2)	0.25 (6.4)	15000 (1034)
1/2	3/8	SS-HPN-NS8-RT6	1.76 (44.7)	0.87 (22.2)	0.75 (19.1)	0.56 (14.2)	0.31 (7.9)	15000 (1034)
1/2	1/2	SS-HPN-NS8-RT8	1.95 (49.6)	0.87 (22.2)	0.75 (19.1)	0.75 (19.1)	0.38 (9.6)	15000 (1034)
3/4	1/8	SS-HPN-NS12-RT2	1.67 (42.4)	1.06 (27.0)	0.75 (19.1)	0.38 (9.7)	0.22 (5.5)	10000 (690)
3/4	1/4	SS-HPN-NS12-RT4	1.85 (46.9)	1.06 (27.0)	0.75 (19.1)	0.56 (14.2)	0.28 (7.1)	10000 (690)
3/4	3/8	SS-HPN-NS12-RT6	1.85 (46.9)	1.06 (27.0)	0.75 (19.1)	0.56 (14.2)	0.38 (9.6)	10000 (690)
3/4	1/2	SS-HPN-NS12-RT8	2.04 (51.8)	1.06 (27.0)	0.75 (19.1)	0.75 (19.1)	0.47 (11.9)	10000 (690)
3/4	3/4	SS-HPN-NS12-RT12	2.04 (51.8)	1.06 (27.0)	0.75 (19.1)	0.75 (19.1)	0.58 (14.8)	10000 (690)
1	1/8	SS-HPN-NS16-RT2	1.96 (49.8)	1.37 (34.9)	0.94 (23.9)	0.38 (9.7)	0.22 (5.5)	10000 (690)
1	1/4	SS-HPN-NS16-RT4	2.14 (54.3)	1.37 (34.9)	0.94 (23.9)	0.56 (14.2)	0.28 (7.1)	10000 (690)
1	3/8	SS-HPN-NS16-RT6	2.14 (54.3)	1.37 (34.9)	0.94 (23.9)	0.56 (14.2)	0.38 (9.6)	10000 (690)
1	1/2	SS-HPN-NS16-RT8	2.33 (59.2)	1.37 (34.9)	0.94 (23.9)	0.75 (19.1)	0.47 (11.9)	10000 (690)
1	3/4	SS-HPN-NS16-RT12	2.33 (59.2)	1.37 (34.9)	0.94 (23.9)	0.75 (19.1)	0.58 (14.8)	10000 (690)
1	1	SS-HPN-NS16-RT16	2.52 (64.0)	1.37 (34.9)	0.94 (23.9)	0.94 (23.9)	0.79 (20.0)	10000 (690)

Hex Nipples

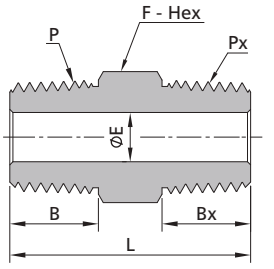

Male ISO Tapered Threads

P-ISO Thread Size, in.	Px-ISO Thread Size, in.	Ordering Number	Dimensions, in. (mm)					Working Pressure psig (bar)
			L	F	B	Bx	E	
1/8	1/8	SS-HPN-RT2	1.05 (26.6)	0.44 (11.1)	0.38 (9.7)	0.38 (9.7)	0.19 (4.8)	15000 (1034)
1/4	1/8	SS-HPN-RT4-RT2	1.30 (32.9)	0.56 (14.3)	0.56 (14.2)	0.38 (9.7)	0.19 (4.8)	15000 (1034)
1/4	1/4	SS-HPN-RT4	1.47 (37.4)	0.56 (14.3)	0.56 (14.2)	0.56 (14.2)	0.25 (6.4)	15000 (1034)
3/8	1/8	SS-HPN-RT6-RT2	1.34 (34.1)	0.69 (17.5)	0.56 (14.2)	0.38 (9.7)	0.19 (4.8)	15000 (1034)
3/8	1/4	SS-HPN-RT6-RT4	1.52 (38.6)	0.69 (17.5)	0.56 (14.2)	0.56 (14.2)	0.25 (6.4)	15000 (1034)
3/8	3/8	SS-HPN-RT6	1.52 (38.6)	0.69 (17.5)	0.56 (14.2)	0.56 (14.2)	0.31 (7.9)	15000 (1034)
1/2	1/8	SS-HPN-RT8-RT2	1.58 (40.2)	0.87 (22.2)	0.75 (19.1)	0.38 (9.7)	0.19 (4.8)	15000 (1034)
1/2	1/4	SS-HPN-RT8-RT4	1.76 (44.7)	0.87 (22.2)	0.75 (19.1)	0.56 (14.2)	0.25 (6.4)	15000 (1034)
1/2	3/8	SS-HPN-RT8-RT6	1.76 (44.7)	0.87 (22.2)	0.75 (19.1)	0.56 (14.2)	0.31 (7.9)	15000 (1034)
1/2	1/2	SS-HPN-RT8	1.95 (49.6)	0.87 (22.2)	0.75 (19.1)	0.75 (19.1)	0.38 (9.6)	15000 (1034)
3/4	1/8	SS-HPN-RT12-RT2	1.67 (42.4)	1.06 (27.0)	0.75 (19.1)	0.38 (9.7)	0.22 (5.5)	10000 (690)
3/4	1/4	SS-HPN-RT12-RT4	1.85 (46.9)	1.06 (27.0)	0.75 (19.1)	0.56 (14.2)	0.28 (7.1)	10000 (690)
3/4	3/8	SS-HPN-RT12-RT6	1.85 (46.9)	1.06 (27.0)	0.75 (19.1)	0.56 (14.2)	0.38 (9.6)	10000 (690)
3/4	1/2	SS-HPN-RT12-RT8	2.04 (51.8)	1.06 (27.0)	0.75 (19.1)	0.75 (19.1)	0.47 (11.9)	10000 (690)
3/4	3/4	SS-HPN-RT12	2.04 (51.8)	1.06 (27.0)	0.75 (19.1)	0.75 (19.1)	0.58 (14.8)	10000 (690)
1	1/8	SS-HPN-RT16-RT2	1.96 (49.8)	1.37 (34.9)	0.94 (23.9)	0.38 (9.7)	0.22 (5.5)	10000 (690)
1	1/4	SS-HPN-RT16-RT4	2.14 (54.3)	1.37 (34.9)	0.94 (23.9)	0.56 (14.2)	0.28 (7.1)	10000 (690)
1	3/8	SS-HPN-RT16-RT6	2.14 (54.3)	1.37 (34.9)	0.94 (23.9)	0.56 (14.2)	0.38 (9.6)	10000 (690)
1	1/2	SS-HPN-RT16-RT8	2.33 (59.2)	1.37 (34.9)	0.94 (23.9)	0.75 (19.1)	0.47 (11.9)	10000 (690)
1	3/4	SS-HPN-RT16-RT12	2.33 (59.2)	1.37 (34.9)	0.94 (23.9)	0.75 (19.1)	0.58 (14.8)	10000 (690)
1	1	SS-HPN-RT16	2.52 (64.0)	1.37 (34.9)	0.94 (23.9)	0.94 (23.9)	0.79 (20.0)	10000 (690)

Hex Nipples

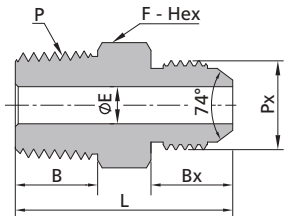

Male NPT Threads								Male JIC
P-NPT Size, in.	Px-JIC Size, in.	Ordering Number	Dimensions, in. (mm)					Working Pressure psig (bar)
			L	F	B	Bx	E	
1/8	1/4	SS-HPN-NS2-JM4	1.23 (31.3)	0.50 (12.7)	0.38 (9.7)	0.55 (14.0)	0.17 (4.4)	15000 (1034)
1/8	3/8	SS-HPN-NS2-JM6	1.31 (33.4)	0.63 (15.9)	0.38 (9.7)	0.56 (14.1)	0.19 (4.8)	15000 (1034)
1/4	1/4	SS-HPN-NS4-JM4	1.46 (37.2)	0.56 (14.3)	0.56 (14.2)	0.55 (14.0)	0.17 (4.4)	15000 (1034)
1/4	3/8	SS-HPN-NS4-JM6	1.49 (37.9)	0.63 (15.9)	0.56 (14.2)	0.56 (14.1)	0.23 (5.8)	15000 (1034)
1/4	1/2	SS-HPN-NS4-JM8	1.65 (41.9)	0.81 (20.6)	0.56 (14.2)	0.66 (16.7)	0.25 (6.4)	15000 (1034)
3/8	1/4	SS-HPN-NS6-JM4	1.52 (38.4)	0.69 (17.5)	0.56 (14.2)	0.55 (14.0)	0.17(4.4)	15000 (1034)
3/8	3/8	SS-HPN-NS6-JM6	1.52 (38.4)	0.69 (17.5)	0.56 (14.2)	0.56 (14.1)	0.23 (5.8)	15000 (1034)
3/8	1/2	SS-HPN-NS6-JM8	1.62 (41.1)	0.81 (20.6)	0.56 (14.2)	0.66 (16.7)	0.31 (7.9)	15000 (1034)
1/2	1/4	SS-HPN-NS8-JM4	1.75 (44.5)	0.87 (22.2)	0.75 (19.1)	0.55 (14.0)	0.17 (4.4)	15000 (1034)
1/2	3/8	SS-HPN-NS8-JM6	1.75 (44.6)	0.87 (22.2)	0.75 (19.1)	0.56 (14.1)	0.23 (5.8)	15000 (1034)
1/2	1/2	SS-HPN-NS8-JM8	1.86 (47.2)	0.87 (22.2)	0.75 (19.1)	0.66 (16.7)	0.31 (8.0)	15000 (1034)
1/2	5/8	SS-HPN-NS8-JM10	1.98 (50.4)	0.94 (23.8)	0.75 (19.1)	0.76 (19.3)	0.37 (9.4)	15000 (1034)
3/4	1/2	SS-HPN-NS12-JM8	1.94 (49.4)	1.06 (27.0)	0.75 (19.1)	0.66 (16.7)	0.39 (9.9)	10000 (690)
3/4	5/8	SS-HPN-NS12-JM10	2.05 (52.0)	1.06 (27.0)	0.75 (19.1)	0.76 (19.3)	0.48 (12.3)	10000 (690)
3/4	3/4	SS-HPN-NS12-JM12	2.17 (55.0)	1.13 (28.6)	0.75 (19.1)	0.86 (21.9)	0.58 (14.8)	10000 (690)
3/4	1	SS-HPN-NS12-JM16	2.30 (58.4)	1.37 (34.9)	0.75 (19.1)	0.91 (23.1)	0.58 (14.8)	10000 (690)
1	3/4	SS-HPN-NS16-JM12	2.44 (62.0)	1.37 (34.9)	0.94 (23.9)	0.86 (21.9)	0.61 (15.5)	10000 (690)
1	1	SS-HPN-NS16-JM16	2.49 (63.2)	1.37 (34.9)	0.94 (23.9)	0.91 (23.1)	0.79 (20.0)	10000 (690)

Hex Nipples ①

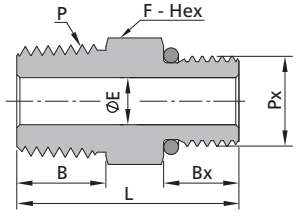

Male NPT Threads								Male SAE O-Ring
P-NPT Size, in.	Px-SAE/MS Thread Size, in.	Ordering Number	Dimensions, in. (mm)					Working Pressure psig (bar)
			L	F	B	Bx	E	
1/4	7/16-20	SS-HPN-NS4-SH7	1.35 (34.2)	0.56 (14.3)	0.56 (14.2)	0.43 (11.0)	0.18 (4.5)	10000 (690)
1/4	9/16-18	SS-HPN-NS4-SH9	1.43 (36.4)	0.69 (17.5)	0.56 (14.2)	0.47 (12.0)	0.28 (7.1)	10000 (690)
3/8	7/16-20	SS-HPN-NS6-SH7	1.39 (35.4)	0.69 (17.5)	0.56 (14.2)	0.43 (11.0)	0.18 (4.5)	10000 (690)
3/8	9/16-18	SS-HPN-NS6-SH9	1.43 (36.4)	0.69 (17.5)	0.56 (14.2)	0.47 (12.0)	0.30 (7.5)	10000 (690)
3/8	3/4-16	SS-HPN-NS6-SH12	1.56 (39.6)	0.87 (22.2)	0.56 (14.2)	0.55 (14.0)	0.38 (9.6)	10000 (690)
1/2	9/16-18	SS-HPN-NS8-SH9	1.67 (42.5)	0.87 (22.2)	0.75 (19.1)	0.47 (12.0)	0.30 (7.5)	10000 (690)
1/2	3/4-16	SS-HPN-NS8-SH12	1.75 (44.5)	0.87 (22.2)	0.75 (19.1)	0.55 (14.0)	0.39 (10.0)	10000 (690)
1/2	7/8-14	SS-HPN-NS8-SH14	1.88 (47.7)	1.00 (25.4)	0.75 (19.1)	0.63 (16.0)	0.47 (11.9)	10000 (690)
3/4	9/16-18	SS-HPN-NS12-SH9	1.76 (44.7)	1.06 (27.0)	0.75 (19.1)	0.47 (12.0)	0.30 (7.5)	10000 (690)
3/4	3/4-16	SS-HPN-NS12-SH12	1.84 (46.7)	1.06 (27.0)	0.75 (19.1)	0.55 (14.0)	0.39 (10.0)	10000 (690)
3/4	7/8-14	SS-HPN-NS12-SH14	1.92 (48.7)	1.06 (27.0)	0.75 (19.1)	0.63 (16.0)	0.49 (12.5)	10000 (690)
1	3/4-16	SS-HPN-NS16-SH12	2.13 (54.1)	1.37 (34.9)	0.94 (23.9)	0.55 (14.0)	0.39 (10.0)	10000 (690)
1	7/8-14	SS-HPN-NS16-SH14	2.21 (56.1)	1.37 (34.9)	0.94 (23.9)	0.63 (16.0)	0.49 (12.5)	10000 (690)

① Male SAE O-ring Ends are supplied with a Fluorocarbon FKM O-ring as standard, other materials of O-rings available.

Hex Nipples

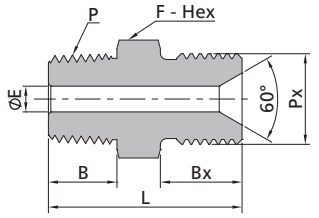

Male NPT Threads								Male Type "M"
P-NPT Size, in.	Px-SAE/MS Thread Size, in.	Ordering Number	Dimensions, in. (mm)					Working Pressure psig (bar)
			L	F	B	Bx	E	
1/8	9/16-18	SS-HPN-NS2-TM9	1.22 (31.0)	0.63 (15.9)	0.38 (9.7)	0.50 (12.7)	0.09 (2.4)	15000 (1034)
1/8	3/4-16	SS-HPN-NS2-TM12	13.9 (35.3)	0.75 (19.1)	0.38 (9.7)	0.63 (16.0)	0.19 (4.8)	15000 (1034)
1/4	9/16-18	SS-HPN-NS4-TM9	1.40 (35.5)	0.63 (15.9)	0.56 (14.2)	0.50 (12.7)	0.09 (2.4)	15000 (1034)
1/4	3/4-16	SS-HPN-NS4-TM12	1.57 (39.8)	0.75 (19.1)	0.56 (14.2)	0.63 (16.0)	0.25 (6.4)	15000 (1034)
1/4	7/8-14	SS-HPN-NS4-TM14	1.77 (45.0)	1.00 (25.4)	0.56 (14.2)	0.76 (19.2)	0.15 (3.8)	15000 (1034)
3/8	9/16-18	SS-HPN-NS6-TM9	1.42 (36.1)	0.69 (17.5)	0.56 (14.2)	0.50 (12.7)	0.09 (2.4)	15000 (1034)
3/8	3/4-16	SS-HPN-NS6-TM12	1.57 (39.8)	0.75 (19.1)	0.56 (14.2)	0.63 (16.0)	0.29 (7.4)	15000 (1034)
3/8	7/8-14	SS-HPN-NS6-TM14	1.96 (49.9)	1.00 (25.4)	0.56 (14.2)	0.76 (19.2)	0.15 (3.8)	15000 (1034)
1/2	9/16-18	SS-HPN-NS8-TM9	1.66 (42.2)	0.87 (22.2)	0.75 (19.1)	0.50 (12.7)	0.09 (2.4)	15000 (1034)
1/2	3/4-16	SS-HPN-NS8-TM12	1.79 (45.5)	0.87 (22.2)	0.75 (19.1)	0.63 (16.0)	0.29 (7.4)	15000 (1034)
1/2	7/8-14	SS-HPN-NS8-TM14	1.96 (49.9)	1.00 (25.4)	0.75 (19.1)	0.76 (19.2)	0.15 (3.8)	15000 (1034)
1/2	1-12	SS-HPN-NS8-TM16	1.85 (47.0)	1.00 (25.4)	0.75 (19.1)	0.64 (16.3)	0.38 (9.6)	15000 (1034)
3/4	9/16-18	SS-HPN-NS12-TM9	1.75 (44.4)	1.06 (27.0)	0.75 (19.1)	0.50 (12.7)	0.09 (2.4)	10000 (690)
3/4	3/4-16	SS-HPN-NS12-TM12	1.88 (47.7)	1.06 (27.0)	0.75 (19.1)	0.63 (16.0)	0.29 (7.4)	10000 (690)
3/4	7/8-14	SS-HPN-NS12-TM14	2.00 (50.9)	1.06 (27.0)	0.75 (19.1)	0.76 (19.2)	0.15 (3.8)	10000 (690)
3/4	1-12	SS-HPN-NS12-TM16	1.89 (48.0)	1.06 (27.0)	0.75 (19.1)	0.64 (16.3)	0.39 (10.0)	10000 (690)
1	1-12	SS-HPN-NS16-TM16	2.18 (55.4)	1.37 (34.9)	0.94 (23.9)	0.64 (16.3)	0.39 (10.0)	10000 (690)
1	1 5/16-12	SS-HPN-NS16-TM21	2.16 (54.8)	1.37 (34.9)	0.94 (23.9)	0.62 (15.7)	0.69 (17.5)	10000 (690)

Hex Nipples

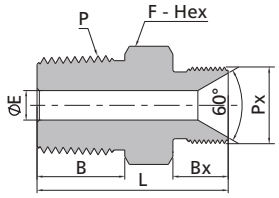

Male NPT Threads			Dimensions, in. (mm)					Male ISO Parallel Threads
P-NPT Size, in.	Px-ISO Parallel Thread Size, in.	Ordering Number	L	F	B	Bx	E	Working Pressure psig (bar)
1/8	1/4	SS-HPN-NS2-HBP4	1.15 (29.3)	0.63 (15.9)	0.38 (9.7)	0.43 (11.0)	0.15 (3.8)	15000 (1034)
1/8	3/8	SS-HPN-NS2-HBP6	1.25 (31.7)	0.81 (20.6)	0.38 (9.7)	0.47 (12.0)	0.19 (4.8)	15000 (1034)
1/4	1/4	SS-HPN-NS4-HBP4	1.33 (33.8)	0.63 (15.9)	0.56 (14.2)	0.43 (11.0)	0.15 (3.8)	15000 (1034)
1/4	3/8	SS-HPN-NS4-HBP6	1.43 (36.2)	0.81 (20.6)	0.56 (14.2)	0.47 (12.0)	0.25 (6.4)	15000 (1034)
1/4	1/2	SS-HPN-NS4-HBP8	1.56 (39.7)	1.00 (25.4)	0.56 (14.2)	0.55 (14.0)	0.25 (6.4)	15000 (1034)
3/8	1/4	SS-HPN-NS6-HBP4	1.35 (34.4)	0.69 (17.5)	0.56 (14.2)	0.43 (11.0)	0.15 (3.8)	15000 (1034)
3/8	3/8	SS-HPN-NS6-HBP6	1.39 (35.4)	0.81 (20.6)	0.56 (14.2)	0.47 (12.0)	0.25 (6.4)	15000 (1034)
3/8	1/2	SS-HPN-NS6-HBP8	1.56 (39.7)	1.00 (25.4)	0.56 (14.2)	0.55 (14.0)	0.31 (7.9)	15000 (1034)
1/2	1/4	SS-HPN-NS8-HBP4	1.59 (40.5)	0.87 (22.2)	0.75 (19.1)	0.43 (11.0)	0.15 (3.8)	15000 (1034)
1/2	3/8	SS-HPN-NS8-HBP6	1.63 (41.5)	0.87 (22.2)	0.75 (19.1)	0.47 (12.0)	0.25 (6.4)	15000 (1034)
1/2	1/2	SS-HPN-NS8-HBP8	1.75 (44.5)	1.00 (25.4)	0.75 (19.1)	0.55 (14.0)	0.37 (9.5)	15000 (1034)
1/2	3/4	SS-HPN-NS8-HBP12	1.95 (49.6)	1.25 (31.8)	0.75 (19.1)	0.63 (16.0)	0.38 (9.6)	15000 (1034)
1/2	1	SS-HPN-NS8-HBP16	2.11 (53.6)	1.50 (38.1)	0.75 (19.1)	0.75 (19.0)	0.38 (9.6)	15000 (1034)
3/4	1/2	SS-HPN-NS12-HBP8	1.80 (45.6)	1.06 (27.0)	0.75 (19.1)	0.55 (14.0)	0.37 (9.5)	10000 (690)
3/4	3/4	SS-HPN-NS12-HBP12	1.95 (49.6)	1.25 (31.8)	0.75 (19.1)	0.63 (16.0)	0.50 (12.7)	10000 (690)
3/4	1	SS-HPN-NS12-HBP16	2.11 (53.7)	1.50 (38.1)	0.75 (19.1)	0.75 (19.0)	0.58 (14.8)	10000 (690)
1	3/4	SS-HPN-NS16-HBP12	2.16 (54.9)	1.37 (34.9)	0.94 (23.9)	0.63 (16.0)	0.50 (12.7)	10000 (690)
1	1	SS-HPN-NS16-HBP16	2.30 (58.5)	1.50 (38.1)	0.94 (23.9)	0.75 (19.0)	0.63 (15.9)	10000 (690)

Hex Nipples

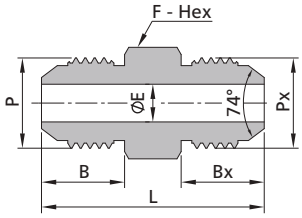

Male JIC			Dimensions, in. (mm)					
P-JIC Size, in.	Px-JIC Size, in.	Ordering Number	L	F	B	Bx	E	Working Pressure psig (bar)
1/4	1/4	SS-HPN-JM4	1.40 (35.6)	0.50 (12.7)	0.55 (14.0)	0.55 (14.0)	0.17 (4.4)	20000 (1379)
3/8	1/4	SS-HPN-JM6-JM4	1.48 (37.7)	0.63 (15.9)	0.56 (14.1)	0.55 (14.0)	0.17 (4.4)	20000 (1379)
3/8	3/8	SS-HPN-JM6	1.49 (37.8)	0.63 (15.9)	0.56 (14.1)	0.56 (14.1)	0.23 (5.8)	20000 (1379)
1/2	3/8	SS-HPN-JM8-JM6	1.65 (41.8)	0.81 (20.6)	0.66 (16.7)	0.56 (14.1)	0.23 (5.8)	20000 (1379)
1/2	1/2	SS-HPN-JM8	1.75 (44.4)	0.81 (20.6)	0.66 (16.7)	0.66 (16.7)	0.31 (8.0)	20000 (1379)
5/8	3/8	SS-HPN-JM10-JM6	1.79 (45.4)	0.94 (23.8)	0.76 (19.3)	0.56 (14.1)	0.23 (5.8)	20000 (1379)
5/8	1/2	SS-HPN-JM10-JM8	1.89 (48.0)	0.94 (23.8)	0.76 (19.3)	0.66 (16.7)	0.31 (8.0)	20000 (1379)
5/8	5/8	SS-HPN-JM10	1.99 (50.6)	0.94 (23.8)	0.76 (19.3)	0.76 (19.3)	0.37 (9.4)	20000 (1379)
3/4	1/2	SS-HPN-JM12-JM8	2.07 (52.6)	1.13 (28.6)	0.86 (21.9)	0.66 (16.7)	0.31 (8.0)	15000 (1034)
3/4	5/8	SS-HPN-JM12-JM10	2.17 (55.2)	1.13 (28.6)	0.86 (21.9)	0.76 (19.3)	0.37 (9.4)	15000 (1034)
3/4	3/4	SS-HPN-JM12	2.28 (57.8)	1.13 (28.6)	0.86 (21.9)	0.86 (21.9)	0.46 (11.6)	15000 (1034)
1	5/8	SS-HPN-JM16-JM10	2.31 (58.6)	1.37 (34.9)	0.91 (23.1)	0.76 (19.3)	0.37 (9.4)	15000 (1034)
1	3/4	SS-HPN-JM16-JM12	2.41 (61.2)	1.37 (34.9)	0.91 (23.1)	0.86 (21.9)	0.46 (11.6)	15000 (1034)
1	1	SS-HPN-JM16	2.46 (62.4)	1.37 (34.9)	0.91 (23.1)	0.91 (23.1)	0.57 (14.6)	15000 (1034)

Hex Nipples

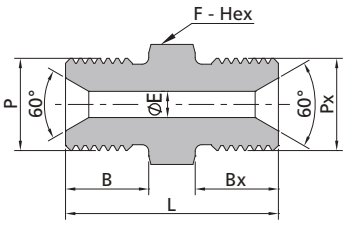

Male Type "M"								Male Type "M"
Px-SAE/MS Thread Size, in.	Px-SAE/MS Thread Size, in.	Ordering Number	Dimensions, in. (mm)					Working Pressure psig (bar)
			L	F	B	Bx	E	
9/16-18	9/16-18	SS-HPN-TM9	1.34 (34.0)	0.63 (15.9)	0.50 (12.7)	0.50 (12.7)	0.09 (2.4)	60000 (4137)
3/4-16	9/16-18	SS-HPN-TM12-TM9	1.51 (38.3)	0.75 (19.1)	0.63 (16.0)	0.50 (12.7)	0.09 (2.4)	30000 (2068)
3/4-16	3/4-16	SS-HPN-TM12	1.64 (41.6)	0.75 (19.1)	0.63 (16.0)	0.63 (16.0)	0.29 (7.4)	30000 (2068)
7/8-14	9/16-18	SS-HPN-TM14-TM9	1.71 (43.5)	1.00 (25.4)	0.76 (19.2)	0.50 (12.7)	0.09 (2.4)	50000 (3447)
7/8-14	3/4-16	SS-HPN-TM14-TM12	1.84 (46.8)	1.00 (25.4)	0.76 (19.2)	0.63 (16.0)	0.15 (3.8)	30000 (2068)
7/8-14	7/8-14	SS-HPN-TM14	1.97 (50.0)	1.00 (25.4)	0.76 (19.2)	0.76 (19.2)	0.15 (3.8)	50000 (3447)
1-12	9/16-18	SS-HPN-TM16-TM9	1.60 (40.6)	1.00 (25.4)	0.64 (16.3)	0.50 (12.7)	0.09 (2.4)	30000 (2068)
1-12	3/4-16	SS-HPN-TM16-TM12	1.73 (43.9)	1.00 (25.4)	0.64 (16.3)	0.63 (16.0)	0.29 (7.4)	30000 (2068)
1-12	7/8-14	SS-HPN-TM16-TM14	1.85 (47.1)	1.00 (25.4)	0.64 (16.3)	0.76 (19.2)	0.15 (3.8)	30000 (2068)
1-12	1-12	SS-HPN-TM16	1.74 (44.2)	1.00 (25.4)	0.64 (16.3)	0.64 (16.3)	0.39 (10.0)	30000 (2068)
1 5/16-12	1-12	SS-HPN-TM21-TM16	1.86 (47.2)	1.37 (34.9)	0.62 (15.7)	0.64 (16.3)	0.39 (10.0)	20000 (1379)
1 5/16-12	1 5/16-12	SS-HPN-TM21	1.83 (46.6)	1.37 (34.9)	0.62 (15.7)	0.62 (15.7)	0.69 (17.5)	20000 (1379)

Hex Long Nipples

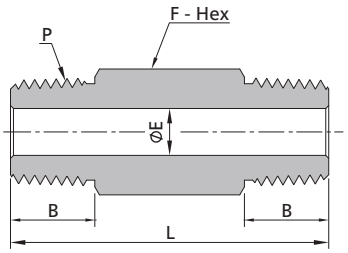

Male NPT Threads

P-NPT Size, in.	Ordering Number	Dimensions, in. (mm)				Working Pressure psig (bar)
		L	F	B	E	
1/8	SS-HPL-NS2-1.5	1.50 (38.1)	0.44 (11.1)	0.38 (9.7)	0.19 (4.8)	15000 (1034)
1/8	SS-HPL-NS2-2	2.00 (50.8)	0.44 (11.1)	0.38 (9.7)	0.19 (4.8)	15000 (1034)
1/8	SS-HPL-NS2-2.5	2.50 (63.5)	0.44 (11.1)	0.38 (9.7)	0.19 (4.8)	15000 (1034)
1/8	SS-HPL-NS2-3	3.00 (76.2)	0.44 (11.1)	0.38 (9.7)	0.19 (4.8)	15000 (1034)
1/4	SS-HPL-NS4-2	2.00 (50.8)	0.56 (14.3)	0.56 (14.2)	0.25 (6.4)	15000 (1034)
1/4	SS-HPL-NS4-2.5	2.50 (63.5)	0.56 (14.3)	0.56 (14.2)	0.25 (6.4)	15000 (1034)
1/4	SS-HPL-NS4-3	3.00 (76.2)	0.56 (14.3)	0.56 (14.2)	0.25 (6.4)	15000 (1034)
1/4	SS-HPL-NS4-4	4.00 (101.6)	0.56 (14.3)	0.56 (14.2)	0.25 (6.4)	15000 (1034)
3/8	SS-HPL-NS6-2	2.00 (50.8)	0.69 (17.5)	0.56 (14.2)	0.31 (7.9)	15000 (1034)
3/8	SS-HPL-NS6-2.5	2.50 (63.5)	0.69 (17.5)	0.56 (14.2)	0.31 (7.9)	15000 (1034)
3/8	SS-HPL-NS6-3	3.00 (76.2)	0.69 (17.5)	0.56 (14.2)	0.31 (7.9)	15000 (1034)
3/8	SS-HPL-NS6-4	4.00 (101.6)	0.69 (17.5)	0.56 (14.2)	0.31 (7.9)	15000 (1034)
1/2	SS-HPL-NS8-3	3.00 (76.2)	0.87 (22.2)	0.75 (19.1)	0.38 (9.6)	15000 (1034)
1/2	SS-HPL-NS8-4	4.00 (101.6)	0.87 (22.2)	0.75 (19.1)	0.38 (9.6)	15000 (1034)
1/2	SS-HPL-NS8-6	6.00 (152.4)	0.87 (22.2)	0.75 (19.1)	0.38 (9.6)	15000 (1034)
3/4	SS-HPL-NS12-3	3.00 (76.2)	1.06 (27.0)	0.75 (19.1)	0.58 (14.8)	10000 (690)
3/4	SS-HPL-NS12-4	4.00 (101.6)	1.06 (27.0)	0.75 (19.1)	0.58 (14.8)	10000 (690)
3/4	SS-HPL-NS12-6	6.00 (152.4)	1.06 (27.0)	0.75 (19.1)	0.58 (14.8)	10000 (690)
3/4	SS-HPL-NS12-8	8.00 (203.2)	1.06 (27.0)	0.75 (19.1)	0.58 (14.8)	10000 (690)
1	SS-HPL-NS16-3	3.00 (76.2)	1.37 (34.9)	0.94 (23.9)	0.79 (20.0)	10000 (690)
1	SS-HPL-NS16-4	4.00 (101.6)	1.37 (34.9)	0.94 (23.9)	0.79 (20.0)	10000 (690)
1	SS-HPL-NS16-6	6.00 (152.4)	1.37 (34.9)	0.94 (23.9)	0.79 (20.0)	10000 (690)
1	SS-HPL-NS16-8	8.00 (203.2)	1.37 (34.9)	0.94 (23.9)	0.79 (20.0)	10000 (690)

FITOK

Hex Long Nipples

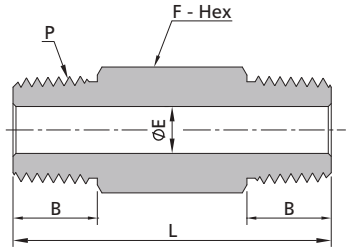

Male ISO Tapered Threads

P-ISO Thread Size, in.	Ordering Number	Dimensions, in. (mm)				Working Pressure psig (bar)
		L	F	B	E	
1/8	SS-HPL-RT2-1.5	1.50 (38.1)	0.44 (11.1)	0.38 (9.7)	0.19 (4.8)	15000 (1034)
1/8	SS-HPL-RT2-2	2.00 (50.8)	0.44 (11.1)	0.38 (9.7)	0.19 (4.8)	15000 (1034)
1/8	SS-HPL-RT2-2.5	2.50 (63.5)	0.44 (11.1)	0.38 (9.7)	0.19 (4.8)	15000 (1034)
1/8	SS-HPL-RT2-3	3.00 (76.2)	0.44 (11.1)	0.38 (9.7)	0.19 (4.8)	15000 (1034)
1/4	SS-HPL-RT4-2	2.00 (50.8)	0.56 (14.3)	0.56 (14.2)	0.25 (6.4)	15000 (1034)
1/4	SS-HPL-RT4-2.5	2.50 (63.5)	0.56 (14.3)	0.56 (14.2)	0.25 (6.4)	15000 (1034)
1/4	SS-HPL-RT4-3	3.00 (76.2)	0.56 (14.3)	0.56 (14.2)	0.25 (6.4)	15000 (1034)
1/4	SS-HPL-RT4-4	4.00 (101.6)	0.56 (14.3)	0.56 (14.2)	0.25 (6.4)	15000 (1034)
3/8	SS-HPL-RT6-2	2.00 (50.8)	0.69 (17.5)	0.56 (14.2)	0.31 (7.9)	15000 (1034)
3/8	SS-HPL-RT6-2.5	2.50 (63.5)	0.69 (17.5)	0.56 (14.2)	0.31 (7.9)	15000 (1034)
3/8	SS-HPL-RT6-3	3.00 (76.2)	0.69 (17.5)	0.56 (14.2)	0.31 (7.9)	15000 (1034)
3/8	SS-HPL-RT6-4	4.00 (101.6)	0.69 (17.5)	0.56 (14.2)	0.31 (7.9)	15000 (1034)
1/2	SS-HPL-RT8-3	3.00 (76.2)	0.87 (22.2)	0.75 (19.1)	0.38 (9.6)	15000 (1034)
1/2	SS-HPL-RT8-4	4.00 (101.6)	0.87 (22.2)	0.75 (19.1)	0.38 (9.6)	15000 (1034)
1/2	SS-HPL-RT8-6	6.00 (152.4)	0.87 (22.2)	0.75 (19.1)	0.38 (9.6)	15000 (1034)
3/4	SS-HPL-RT12-3	3.00 (76.2)	1.06 (27.0)	0.75 (19.1)	0.58 (14.8)	10000 (690)
3/4	SS-HPL-RT12-4	4.00 (101.6)	1.06 (27.0)	0.75 (19.1)	0.58 (14.8)	10000 (690)
3/4	SS-HPL-RT12-6	6.00 (152.4)	1.06 (27.0)	0.75 (19.1)	0.58 (14.8)	10000 (690)
3/4	SS-HPL-RT12-8	8.00 (203.2)	1.06 (27.0)	0.75 (19.1)	0.58 (14.8)	10000 (690)
1	SS-HPL-RT16-3	3.00 (76.2)	1.37 (34.9)	0.94 (23.9)	0.79 (20.0)	10000 (690)
1	SS-HPL-RT16-4	4.00 (101.6)	1.37 (34.9)	0.94 (23.9)	0.79 (20.0)	10000 (690)
1	SS-HPL-RT16-6	6.00 (152.4)	1.37 (34.9)	0.94 (23.9)	0.79 (20.0)	10000 (690)
1	SS-HPL-RT16-8	8.00 (203.2)	1.37 (34.9)	0.94 (23.9)	0.79 (20.0)	10000 (690)

Pipe Caps

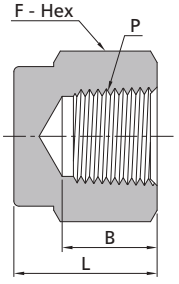

Female NPT Threads

P-NPT Size, in.	Ordering Number	Dimensions, in. (mm)			Working Pressure psig (bar)
		L	F	B	
1/8	SS-HPC-FNS2	0.75 (19.1)	0.63 (15.9)	0.41 (10.4)	15000 (1034)
1/4	SS-HPC-FNS4	0.91 (23.1)	0.94 (23.8)	0.59 (15.0)	15000 (1034)
3/8	SS-HPC-FNS6	1.03 (26.2)	1.13 (28.6)	0.59 (15.0)	15000 (1034)
1/2	SS-HPC-FNS8	1.34 (34.0)	1.37 (34.9)	0.78 (19.8)	15000 (1034)
3/4	SS-HPC-FNS12	1.62 (36.6)	1.50 (38.1)	0.81 (20.6)	10000 (690)
1	SS-HPC-FNS16	1.62 (41.1)	44.5 (1.75)	1.00 (25.4)	10000 (690)

Pipe Caps

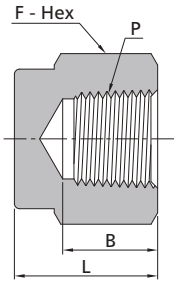

Female ISO Tapered Threads

P-ISO Thread Size, in.	Ordering Number	Dimensions, in. (mm)			Working Pressure psig (bar)
		L	F	B	
1/8	SS-HPC-FRT2	0.75 (19.1)	0.63 (15.9)	0.41 (10.4)	15000 (1034)
1/4	SS-HPC-FRT4	0.91 (23.1)	0.94 (23.8)	0.59 (15.0)	15000 (1034)
3/8	SS-HPC-FRT6	1.03 (26.2)	1.13 (28.6)	0.59 (15.0)	15000 (1034)
1/2	SS-HPC-FRT8	1.34 (34.0)	1.37 (34.9)	0.78 (19.8)	15000 (1034)
3/4	SS-HPC-FRT12	1.62 (36.6)	1.50 (38.1)	0.81 (20.6)	10000 (690)
1	SS-HPC-FRT16	1.62 (41.1)	1.75 (44.5)	1.00 (25.4)	10000 (690)

Pipe Caps

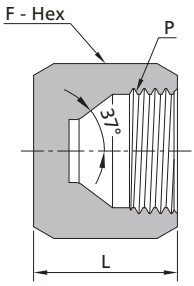

Female JIC

P-JIC Size, in.	Ordering Number	Dimensions, in. (mm)		Working Pressure psig (bar)
		L	F	
1/4	SS-HPC-JF4	0.63 (16.1)	0.56 (14.3)	20000 (1379)
3/8	SS-HPC-JF6	0.72 (18.3)	0.69 (17.5)	20000 (1379)
1/2	SS-HPC-JF8	0.85 (21.6)	0.87 (22.2)	20000 (1379)
5/8	SS-HPC-JF10	0.98 (24.9)	1.00 (25.4)	20000 (1379)
3/4	SS-HPC-JF12	1.06 (26.8)	1.25 (31.8)	15000 (1034)
1	SS-HPC-JF16	1.18 (30.0)	1.50 (38.1)	15000 (1034)

Pipe Cap Assemblies (Moveable Insert)

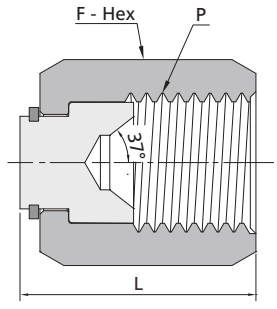

Moveable Insert Female JIC

P-JIC Size, in.	Ordering Number	Dimensions, in. (mm)		Working Pressure psig (bar)
		L	F	
1/4	SS-HMC-JF4	0.70 (17.8)	0.56 (14.3)	20000 (1379)
3/8	SS-HMC-JF6	0.81 (20.5)	0.69 (17.5)	20000 (1379)
1/2	SS-HMC-JF8	0.94 (23.9)	0.87 (22.2)	20000 (1379)
5/8	SS-HMC-JF10	1.07 (27.1)	1.00 (25.4)	20000 (1379)
3/4	SS-HMC-JF12	1.24 (31.6)	1.25 (31.8)	15000 (1034)
1	SS-HMC-JF16	1.29 (32.8)	1.50 (38.1)	15000 (1034)

FITOK

Pipe Cap Assemblies (Moveable Insert)

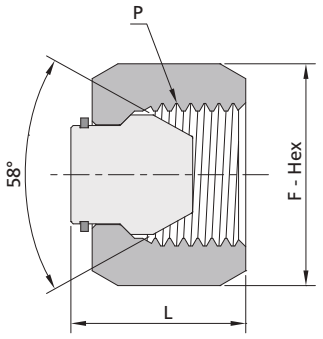

Moveable Insert Female Type "M"				
P-SAE/MS Thread Size, in.	Ordering Number	Dimensions, in. (mm)		Working Pressure psig (bar)
		L	F	
9/16-18	SS-HMC-TM9	0.85 (21.6)	0.69 (17.5)	60000 (4137)
3/4-16	SS-HMC-TM12	0.91 (23.1)	1.00 (25.4)	30000 (2068)
7/8-14	SS-HMC-TM14	1.28 (32.5)	1.19 (30.2)	50000 (3447)
1-12	SS-HMC-TM16	1.25 (31.8)	1.25 (31.8)	30000 (2068)
1 5/16-12	SS-HMC-TM21	1.18 (30.0)	1.50 (38.1)	20000 (1379)

Pipe Cap Assemblies (Moveable Insert)

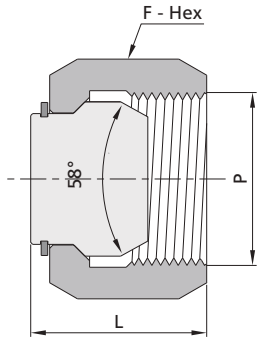

Movable Insert/Female ISO Parallel Threads				
P-ISO Parallel Thread Size, in.	Ordering Number	Dimensions, in. (mm)		Working Pressure psig (bar)
		L	F	
1/4	SS-HMC-HSBP4	0.70 (17.8)	0.63 (15.9)	20000 (1379)
3/8	SS-HMC-HSBP6	0.78 (19.8)	0.81 (20.6)	20000 (1379)
1/2	SS-HMC-HSBP8	0.94 (23.9)	1.00 (25.4)	20000 (1379)
3/4	SS-HMC-HSBP12	1.06 (26.9)	1.25 (31.8)	20000 (1379)
1	SS-HMC-HSBP16	1.33 (33.8)	1.50 (38.1)	20000 (1379)

Hex Couplings

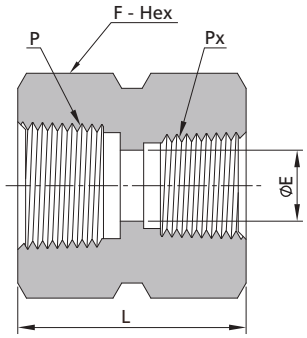

Female NPT Threads

P-NPT Size, in.	Px-NPT Size, in.	Ordering Number	Dimensions, in. (mm)			Working Pressure psig (bar)
			L	F	E	
1/8	1/8	SS-HPG-FNS2	0.94 (23.8)	0.63 (15.9)	0.31 (8.0)	15000 (1034)
1/4	1/8	SS-HPG-FNS4-FNS2	1.14 (28.9)	0.94 (23.8)	0.31 (8.0)	15000 (1034)
1/4	1/4	SS-HPG-FNS4	1.32 (33.5)	0.94 (23.8)	0.41 (10.4)	15000 (1034)
3/8	1/8	SS-HPG-FNS6-FNS2	1.14 (28.9)	1.13 (28.6)	0.31 (8.0)	15000 (1034)
3/8	1/4	SS-HPG-FNS6-FNS4	1.32 (33.5)	1.13 (28.6)	0.41 (10.4)	15000 (1034)
3/8	3/8	SS-HPG-FNS6	1.32 (33.5)	1.13 (28.6)	0.54 (13.8)	15000 (1034)
1/2	1/8	SS-HPG-FNS8-FNS2	1.35 (34.2)	1.37 (34.9)	0.31 (8.0)	15000 (1034)
1/2	1/4	SS-HPG-FNS8-FNS4	1.53 (38.8)	1.37 (34.9)	0.41 (10.4)	15000 (1034)
1/2	3/8	SS-HPG-FNS8-FNS6	1.53 (38.8)	1.37 (34.9)	0.54 (13.8)	15000 (1034)
1/2	1/2	SS-HPG-FNS8	1.72 (43.8)	1.37 (34.9)	0.67 (17.0)	15000 (1034)
3/4	1/8	SS-HPG-FNS12-FNS2	1.40 (35.5)	1.50 (38.1)	0.31 (8.0)	10000 (690)
3/4	1/4	SS-HPG-FNS12-FNS4	1.58 (40.1)	1.50 (38.1)	0.41 (10.4)	10000 (690)
3/4	3/8	SS-HPG-FNS12-FNS6	1.58 (40.1)	1.50 (38.1)	0.54 (13.8)	10000 (690)
3/4	1/2	SS-HPG-FNS12-FNS8	1.79 (45.4)	1.50 (38.1)	0.67 (17.0)	10000 (690)
3/4	3/4	SS-HPG-FNS12	1.84 (46.7)	1.50 (38.1)	0.88 (22.3)	10000 (690)
1	1/8	SS-HPG-FNS16-FNS2	1.59 (40.5)	1.75 (44.5)	0.31 (8.0)	10000 (690)
1	1/4	SS-HPG-FNS16-FNS4	1.76 (44.8)	1.75 (44.5)	0.41 (10.4)	10000 (690)
1	3/8	SS-HPG-FNS16-FNS6	1.76 (44.8)	1.75 (44.5)	0.54 (13.8)	10000 (690)
1	1/2	SS-HPG-FNS16-FNS8	1.96 (49.7)	1.75 (44.5)	0.67 (17.0)	10000 (690)
1	3/4	SS-HPG-FNS16-FNS12	2.00 (50.7)	1.75 (44.5)	0.88 (22.3)	10000 (690)
1	1	SS-HPG-FNS16	2.19 (55.5)	1.75 (44.5)	1.11 (28.1)	10000 (690)

Hex Couplings

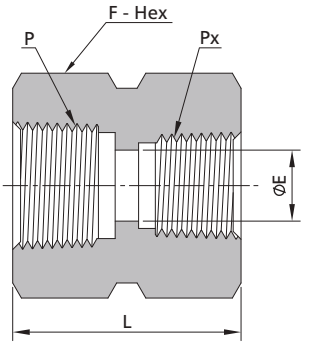

Female NPT Threads						Female ISO Tapered Threads
P-NPT Size, in.	Px-ISO Thread Size, in.	Ordering Number	Dimensions, in. (mm)			Working Pressure psig (bar)
			L	F	E	
1/8	1/8	SS-HPG-FNS2-FRT2	0.94 (23.8)	0.63 (15.9)	0.31 (8.0)	15000 (1034)
1/4	1/8	SS-HPG-FNS4-FRT2	1.14 (28.9)	0.94 (23.8)	0.31 (8.0)	15000 (1034)
1/4	1/4	SS-HPG-FNS4-FRT4	1.32 (33.5)	0.94 (23.8)	0.41 (10.4)	15000 (1034)
3/8	1/8	SS-HPG-FNS6-FRT2	1.14 (28.9)	1.13 (28.6)	0.31 (8.0)	15000 (1034)
3/8	1/4	SS-HPG-FNS6-FRT4	1.32 (33.5)	1.13 (28.6)	0.41 (10.4)	15000 (1034)
3/8	3/8	SS-HPG-FNS6-FRT6	1.32 (33.5)	1.13 (28.6)	0.54 (13.8)	15000 (1034)
1/2	1/8	SS-HPG-FNS8-FRT2	1.35 (34.2)	1.37 (34.9)	0.31 (8.0)	15000 (1034)
1/2	1/4	SS-HPG-FNS8-FRT4	1.53 (38.8)	1.37 (34.9)	0.41 (10.4)	15000 (1034)
1/2	3/8	SS-HPG-FNS8-FRT6	1.53 (38.8)	1.37 (34.9)	0.54 (13.8)	15000 (1034)
1/2	1/2	SS-HPG-FNS8-FRT8	1.72 (43.8)	1.37 (34.9)	0.67 (17.0)	15000 (1034)
3/4	1/8	SS-HPG-FNS12-FRT2	1.40 (35.5)	1.50 (38.1)	0.31 (8.0)	10000 (690)
3/4	1/4	SS-HPG-FNS12-FRT4	1.58 (40.1)	1.50 (38.1)	0.41 (10.4)	10000 (690)
3/4	3/8	SS-HPG-FNS12-FRT6	1.58 (40.1)	1.50 (38.1)	0.54 (13.8)	10000 (690)
3/4	1/2	SS-HPG-FNS12-FRT8	1.79 (45.4)	1.50 (38.1)	0.69 (17.4)	10000 (690)
3/4	3/4	SS-HPG-FNS12-FRT12	1.84 (46.7)	1.50 (38.1)	0.88 (22.3)	10000 (690)
1	1/8	SS-HPG-FNS16-FRT2	1.59 (40.5)	1.75 (44.5)	0.31 (8.0)	10000 (690)
1	1/4	SS-HPG-FNS16-FRT4	1.76 (44.8)	1.75 (44.5)	0.41 (10.4)	10000 (690)
1	3/8	SS-HPG-FNS16-FRT6	1.76 (44.8)	1.75 (44.5)	0.54 (13.8)	10000 (690)
1	1/2	SS-HPG-FNS16-FRT8	1.96 (49.7)	1.75 (44.5)	0.69 (17.4)	10000 (690)
1	3/4	SS-HPG-FNS16-FRT12	2.00 (50.7)	1.75 (44.5)	0.90 (22.8)	10000 (690)
1	1	SS-HPG-FNS16-FRT16	2.19 (55.5)	1.75 (44.5)	1.11 (28.1)	10000 (690)

Hex Couplings

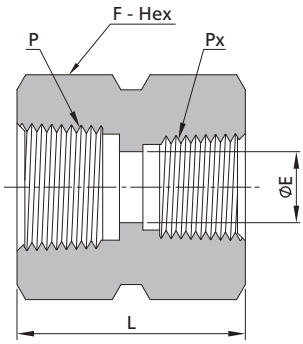

Female ISO Tapered Threads						
P-ISO Thread Size, in.	Px-ISO Thread Size, in.	Ordering Number	Dimensions, in. (mm)			Working Pressure psig (bar)
			L	F	E	
1/8	1/8	SS-HPG-FRT2	0.94 (23.8)	0.63 (15.9)	0.31 (8.0)	15000 (1034)
1/4	1/8	SS-HPG-FRT4-FRT2	1.14 (28.9)	0.94 (23.8)	0.31 (8.0)	15000 (1034)
1/4	1/4	SS-HPG-FRT4	1.32 (33.5)	0.94 (23.8)	0.41 (10.4)	15000 (1034)
3/8	1/8	SS-HPG-FRT6-FRT2	1.14 (28.9)	1.13 (28.6)	0.31 (8.0)	15000 (1034)
3/8	1/4	SS-HPG-FRT6-FRT4	1.32 (33.5)	1.13 (28.6)	0.41 (10.4)	15000 (1034)
3/8	3/8	SS-HPG-FRT6	1.32 (33.5)	1.13 (28.6)	0.54 (13.8)	15000 (1034)
1/2	1/8	SS-HPG-FRT8-FRT2	1.35 (34.2)	1.37 (34.9)	0.31 (8.0)	15000 (1034)
1/2	1/4	SS-HPG-FRT8-FRT4	1.53 (38.8)	1.37 (34.9)	0.41 (10.4)	15000 (1034)
1/2	3/8	SS-HPG-FRT8-FRT6	1.53 (38.8)	1.37 (34.9)	0.54 (13.8)	15000 (1034)
1/2	1/2	SS-HPG-FRT8	1.72 (43.8)	1.37 (34.9)	0.69 (17.4)	15000 (1034)
3/4	1/8	SS-HPG-FRT12-FRT2	1.40 (35.5)	1.50 (38.1)	0.31 (8.0)	10000 (690)
3/4	1/4	SS-HPG-FRT12-FRT4	1.58 (40.1)	1.50 (38.1)	0.41 (10.4)	10000 (690)
3/4	3/8	SS-HPG-FRT12-FRT6	1.58 (40.1)	1.50 (38.1)	0.54 (13.8)	10000 (690)
3/4	1/2	SS-HPG-FRT12-FRT8	1.79 (45.4)	1.50 (38.1)	0.90 (22.8)	10000 (690)
3/4	3/4	SS-HPG-FRT12	1.84 (46.7)	1.50 (38.1)	1.13 (28.7)	10000 (690)
1	1/8	SS-HPG-FRT16-FRT2	1.59 (40.5)	1.75 (44.5)	0.31 (8.0)	10000 (690)
1	1/4	SS-HPG-FRT16-FRT4	1.76 (44.8)	1.75 (44.5)	0.41 (10.4)	10000 (690)
1	3/8	SS-HPG-FRT16-FRT6	1.76 (44.8)	1.75 (44.5)	0.54 (13.8)	10000 (690)
1	1/2	SS-HPG-FRT16-FRT8	1.96 (49.7)	1.75 (44.5)	0.69 (17.4)	10000 (690)
1	3/4	SS-HPG-FRT16-FRT12	2.00 (50.7)	1.75 (44.5)	0.90 (22.8)	10000 (690)
1	1	SS-HPG-FRT16	2.19 (55.5)	1.75 (44.5)	1.13 (28.7)	10000 (690)

Hex Couplings

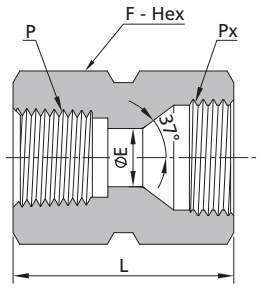

Female NPT Threads						Female JIC
P-NPT Size, in.	Px-JIC Size, in.	Ordering Number	Dimensions, in. (mm)			Working Pressure psig (bar)
			L	F	E	
1/8	1/4	SS-HPG-FNS2-JF4	1.12 (28.4)	0.63 (15.9)	0.17 (4.3)	15000 (1034)
1/4	1/4	SS-HPG-FNS4-JF4	1.33 (33.7)	0.94 (23.8)	0.17 (4.3)	15000 (1034)
1/4	3/8	SS-HPG-FNS4-JF6	1.36 (34.5)	0.94 (23.8)	0.30 (7.5)	15000 (1034)
3/8	1/4	SS-HPG-FNS6-JF4	1.33 (33.7)	1.13 (28.6)	0.17 (4.3)	15000 (1034)
3/8	3/8	SS-HPG-FNS6-JF6	1.36 (34.5)	1.13 (28.6)	0.30 (7.5)	15000 (1034)
3/8	1/2	SS-HPG-FNS6-JF8	1.44 (36.5)	1.13 (28.6)	0.39 (9.9)	15000 (1034)
1/2	3/8	SS-HPG-FNS8-JF6	1.56 (39.7)	1.37 (34.9)	0.30 (7.5)	15000 (1034)
1/2	1/2	SS-HPG-FNS8-JF8	1.64 (41.7)	1.37 (34.9)	0.39 (9.9)	15000 (1034)
1/2	5/8	SS-HPG-FNS8-JF10	1.74 (44.1)	1.37 (34.9)	0.48 (12.3)	15000 (1034)

Hex Couplings

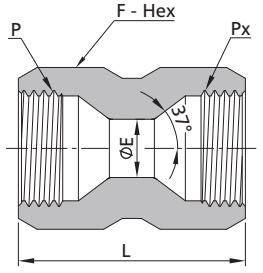

Female JIC						
P-JIC Size, in.	Px-JIC Size, in.	Ordering Number	Dimensions, in. (mm)			Working Pressure psig (bar)
			L	F	E	
1/4	1/4	SS-HPG-JF4	1.24 (31.5)	0.56 (14.3)	0.17 (4.3)	20000 (1379)
3/8	1/4	SS-HPG-JF6-JF4	1.27 (32.3)	0.69 (17.5)	0.17 (4.3)	20000 (1379)
3/8	3/8	SS-HPG-JF6	1.33 (33.8)	0.69 (17.5)	0.30 (7.5)	20000 (1379)
1/2	3/8	SS-HPG-JF8-JF6	1.39 (35.4)	0.87 (22.2)	0.30 (7.5)	20000 (1379)
1/2	1/2	SS-HPG-JF8	1.48 (37.6)	0.87 (22.2)	0.39 (9.9)	20000 (1379)
5/8	1/2	SS-HPG-JF10-JF8	1.57 (40.0)	1.00 (25.4)	0.39 (9.9)	20000 (1379)
5/8	5/8	SS-HPG-JF10	1.68 (42.6)	1.00 (25.4)	0.48 (12.3)	20000 (1379)
3/4	5/8	SS-HPG-JF12-JF10	1.74 (44.1)	1.37 (34.8)	0.48 (12.3)	15000 (1034)
3/4	3/4	SS-HPG-JF12	1.80 (45.8)	1.25 (31.8)	0.61 (15.5)	15000 (1034)
1	3/4	SS-HPG-JF16-JF12	1.89 (48.1)	1.50 (38.1)	0.61 (15.5)	15000 (1034)
1	1	SS-HPG-JF16	1.97 (50.1)	1.50 (38.1)	0.84 (21.4)	15000 (1034)

Zero-Clearance Unions①

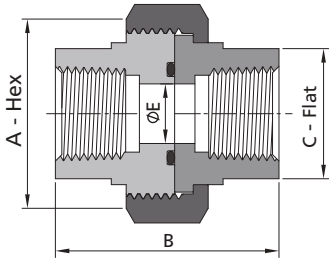

Female NPT Threads						
P-NPT Size, in.	Ordering Number	Dimensions, in. (mm)				Working Pressure psig (bar)
		A	B	C	E	
1/8	SS-HPZ-FNS2	1.06 (27.0)	1.75 (44.5)	0.62 (15.8)	0.31 (8.0)	15000 (1034)
1/4	SS-HPZ-FNS4	1.50 (38.1)	2.00 (50.8)	0.94 (23.8)	0.41 (10.4)	15000 (1034)
3/8	SS-HPZ-FNS6	1.75 (44.5)	2.25 (57.2)	1.12 (28.5)	0.54 (13.8)	15000 (1034)
1/2	SS-HPZ-FNS8	2.00 (50.8)	2.50 (63.5)	1.37 (34.9)	0.67 (17.0)	15000 (1034)
3/4	SS-HPZ-FNS12	2.25 (57.2)	2.75 (69.9)	1.50 (38.1)	0.88 (22.3)	10000 (690)

① *Working temperature range with Fluorocarbon FKM O-rings: 0°F to 400°F (-17.8°C to 204°C), other materials of O-rings available.*

Adapters

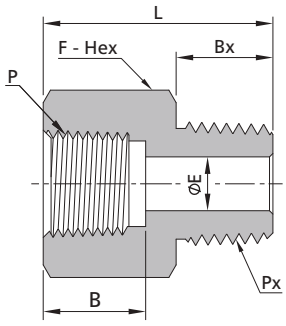

Female NPT Threads								Male NPT Threads
P-NPT Size, in.	Px-NPT Size, in.	Ordering Number	Dimensions, in. (mm)					Working Pressure psig (bar)
			L	F	B	Bx	E	
1/8	1/8	SS-HPA-FNS2-NS2	0.96 (24.5)	0.63 (15.9)	0.41 (10.4)	0.38 (9.7)	0.19 (4.8)	15000 (1034)
1/8	1/4	SS-HPA-FNS2-NS4	1.13 (28.8)	0.63 (15.9)	0.41 (10.4)	0.56 (14.2)	0.25 (6.4)	15000 (1034)
1/8	3/8	SS-HPA-FNS2-NS6	1.14 (29.0)	0.69 (17.5)	0.41 (10.4)	0.56 (14.2)	0.31 (7.9)	15000 (1034)
1/8	1/2	SS-HPA-FNS2-NS8	1.08 (27.4)	0.87 (22.2)	0.41 (10.4)	0.75 (19.1)	0.31 (8.0)	15000 (1034)
1/8	3/4	SS-HPA-FNS2-NS12	1.08 (27.4)	1.06 (27.0)	0.41 (10.4)	0.75 (19.1)	0.31 (8.0)	10000 (690)
1/4	1/8	SS-HPA-FNS4-NS2	1.25 (31.8)	0.94 (23.8)	0.59 (15.0)	0.38 (9.7)	0.19 (4.8)	15000 (1034)
1/4	1/4	SS-HPA-FNS4-NS4	1.37 (34.9)	0.94 (23.8)	0.59 (15.0)	0.56 (14.2)	0.25 (6.4)	15000 (1034)
1/4	3/8	SS-HPA-FNS4-NS6	1.37 (34.9)	0.94 (23.8)	0.59 (15.0)	0.56 (14.2)	0.31 (7.9)	15000 (1034)
1/4	1/2	SS-HPA-FNS4-NS8	1.58 (40.1)	0.94 (23.8)	0.59 (15.0)	0.75 (19.1)	0.38 (9.6)	15000 (1034)
1/4	3/4	SS-HPA-FNS4-NS12	1.34 (34.1)	1.06 (27.0)	0.59 (15.0)	0.75 (19.1)	0.41 (10.4)	10000 (690)
1/4	1	SS-HPA-FNS4-NS16	1.62 (41.1)	1.37 (34.9)	0.59 (15.0)	0.94 (23.9)	0.41 (10.4)	10000 (690)
3/8	1/4	SS-HPA-FNS6-NS4	1.42 (36.0)	1.13 (28.6)	0.59 (15.0)	0.56 (14.2)	0.25 (6.4)	15000 (1034)
3/8	3/8	SS-HPA-FNS6-NS6	1.42 (36.0)	1.13 (28.6)	0.59 (15.0)	0.56 (14.2)	0.31 (7.9)	15000 (1034)
3/8	1/2	SS-HPA-FNS6-NS8	1.61 (41.0)	1.13 (28.6)	0.59 (15.0)	0.75 (19.1)	0.38 (9.6)	15000 (1034)
3/8	3/4	SS-HPA-FNS6-NS12	1.61 (41.0)	1.06 (27.0)	0.59 (15.0)	0.75 (19.1)	0.54 (13.8)	10000 (690)
3/8	1	SS-HPA-FNS6-NS16	1.47 (37.3)	1.37 (34.9)	0.59 (15.0)	0.94 (23.9)	0.54 (13.8)	10000 (690)
1/2	1/4	SS-HPA-FNS8-NS4	1.72 (43.1)	1.37 (34.9)	0.78 (19.8)	0.56 (14.2)	0.25 (6.4)	15000 (1034)
1/2	3/8	SS-HPA-FNS8-NS6	1.72 (43.1)	1.37 (34.9)	0.78 (19.8)	0.56 (14.2)	0.31 (7.9)	15000 (1034)
1/2	1/2	SS-HPA-FNS8-NS8	1.89 (48.0)	1.37 (34.9)	0.78 (19.8)	0.75 (19.1)	0.38 (9.6)	15000 (1034)
1/2	3/4	SS-HPA-FNS8-NS12	1.89 (48.0)	1.37 (34.9)	0.78 (19.8)	0.75 (19.1)	0.58 (14.8)	10000 (690)
1/2	1	SS-HPA-FNS8-NS16	2.08 (52.8)	1.37 (34.9)	0.78 (19.8)	0.94 (23.9)	0.67 (17.0)	10000 (690)
3/4	1/2	SS-HPA-FNS12-NS8	1.89 (48.1)	1.50 (38.1)	0.81 (20.6)	0.75 (19.1)	0.47 (11.9)	10000 (690)
3/4	3/4	SS-HPA-FNS12-NS12	1.89 (48.1)	1.50 (38.1)	0.81 (20.6)	0.75 (19.1)	0.58 (14.8)	10000 (690)
3/4	1	SS-HPA-FNS12-NS16	2.08 (52.9)	1.50 (38.1)	0.81 (20.6)	0.94 (23.9)	0.79 (20.0)	10000 (690)
1	1/2	SS-HPA-FNS16-NS8	2.10 (53.3)	1.75 (44.5)	1.00 (25.4)	0.75 (19.1)	0.47 (11.9)	10000 (690)
1	3/4	SS-HPA-FNS16-NS12	2.10 (53.3)	1.75 (44.5)	1.00 (25.4)	0.75 (19.1)	0.58 (14.8)	10000 (690)
1	1	SS-HPA-FNS16-NS16	2.29 (58.1)	1.75 (44.5)	1.00 (25.4)	0.94 (23.9)	0.79 (20.0)	10000 (690)

Adapters

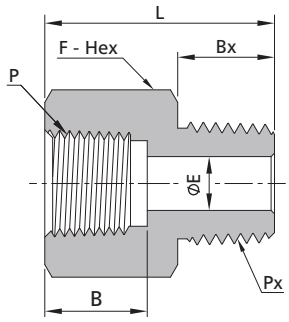

Female NPT Threads								Male ISO Tapered Threads
P-NPT Size, in.	Px-ISO Thread Size, in.	Ordering Number	Dimensions, in. (mm)					Working Pressure psig (bar)
			L	F	B	Bx	E	
1/8	1/8	SS-HPA-FNS2-RT2	0.96 (24.5)	0.63 (15.9)	0.41 (10.4)	0.38 (9.7)	0.19 (4.8)	15000 (1034)
1/8	1/4	SS-HPA-FNS2-RT4	1.13 (28.8)	0.63 (15.9)	0.41 (10.4)	0.56 (14.2)	0.25 (6.4)	15000 (1034)
1/8	3/8	SS-HPA-FNS2-RT6	1.14 (29.0)	0.69 (17.5)	0.41 (10.4)	0.56 (14.2)	0.31 (7.9)	15000 (1034)
1/8	1/2	SS-HPA-FNS2-RT8	1.08 (27.4)	0.87 (22.2)	0.41 (10.4)	0.75 (19.1)	0.31 (8.0)	15000 (1034)
1/8	3/4	SS-HPA-FNS2-RT12	1.08 (27.4)	1.06 (27.0)	0.41 (10.4)	0.75 (19.1)	0.31 (8.0)	10000 (690)
1/4	1/8	SS-HPA-FNS4-RT2	1.25 (31.8)	0.94 (23.8)	0.59 (15.0)	0.38 (9.7)	0.19 (4.8)	15000 (1034)
1/4	1/4	SS-HPA-FNS4-RT4	1.37 (34.9)	0.94 (23.8)	0.59 (15.0)	0.56 (14.2)	0.25 (6.4)	15000 (1034)
1/4	3/8	SS-HPA-FNS4-RT6	1.37 (34.9)	0.94 (23.8)	0.59 (15.0)	0.56 (14.2)	0.31 (7.9)	15000 (1034)
1/4	1/2	SS-HPA-FNS4-RT8	1.58 (40.1)	0.94 (23.8)	0.59 (15.0)	0.75 (19.1)	0.38 (9.6)	15000 (1034)
1/4	3/4	SS-HPA-FNS4-RT12	1.34 (34.1)	1.06 (27.0)	0.59 (15.0)	0.75 (19.1)	0.41 (10.4)	10000 (690)
1/4	1	SS-HPA-FNS4-RT16	1.62 (41.1)	1.37 (34.9)	0.59 (15.0)	0.94 (23.9)	0.41 (10.4)	10000 (690)
3/8	1/4	SS-HPA-FNS6-RT4	1.42 (36.0)	1.13 (28.6)	0.59 (15.0)	0.56 (14.2)	0.25 (6.4)	15000 (1034)
3/8	3/8	SS-HPA-FNS6-RT6	1.42 (36.0)	1.13 (28.6)	0.59 (15.0)	0.56 (14.2)	0.31 (7.9)	15000 (1034)
3/8	1/2	SS-HPA-FNS6-RT8	1.61 (41.0)	1.13 (28.6)	0.59 (15.0)	0.75 (19.1)	0.38 (9.6)	15000 (1034)
3/8	3/4	SS-HPA-FNS6-RT12	1.61 (41.0)	1.06(27.0)	0.59 (15.0)	0.75 (19.1)	0.54 (13.8)	10000 (690)
3/8	1	SS-HPA-FNS6-RT16	1.47 (37.3)	1.37 (34.9)	0.59 (15.0)	0.94 (23.9)	0.54 (13.8)	10000 (690)
1/2	1/4	SS-HPA-FNS8-RT4	1.72 (43.1)	1.37 (34.9)	0.78 (19.8)	0.56 (14.2)	0.25 (6.4)	15000 (1034)
1/2	3/8	SS-HPA-FNS8-RT6	1.72 (43.1)	1.37 (34.9)	0.78 (19.8)	0.56 (14.2)	0.31 (7.9)	15000 (1034)
1/2	1/2	SS-HPA-FNS8-RT8	1.89 (48.0)	1.37 (34.9)	0.78 (19.8)	0.75 (19.1)	0.38 (9.6)	15000 (1034)
1/2	3/4	SS-HPA-FNS8-RT12	1.89 (48.0)	1.37 (34.9)	0.78 (19.8)	0.75 (19.1)	0.58 (14.8)	10000 (690)
1/2	1	SS-HPA-FNS8-RT16	2.08 (52.8)	1.37 (34.9)	0.78 (19.8)	0.94 (23.9)	0.67 (17.0)	10000 (690)
3/4	1/2	SS-HPA-FNS12-RT8	1.89 (48.1)	1.50 (38.1)	0.81 (20.6)	0.75 (19.1)	0.47 (11.9)	10000 (690)
3/4	3/4	SS-HPA-FNS12-RT12	1.89 (48.1)	1.50 (38.1)	0.81 (20.6)	0.75 (19.1)	0.58 (14.8)	10000 (690)
3/4	1	SS-HPA-FNS12-RT16	2.08 (52.9)	1.50 (38.1)	0.81 (20.6)	0.94 (23.9)	0.79 (20.0)	10000 (690)
1	1/2	SS-HPA-FNS16-RT8	2.10 (53.3)	1.75 (44.5)	1.00 (25.4)	0.75 (19.1)	0.47 (11.9)	10000 (690)
1	3/4	SS-HPA-FNS16-RT12	2.10 (53.3)	1.75 (44.5)	1.00 (25.4)	0.75 (19.1)	0.58 (14.8)	10000 (690)
1	1	SS-HPA-FNS16-RT16	2.29 (58.1)	1.75 (44.5)	1.00 (25.4)	0.94 (23.9)	0.79 (20.0)	10000 (690)

Adapters

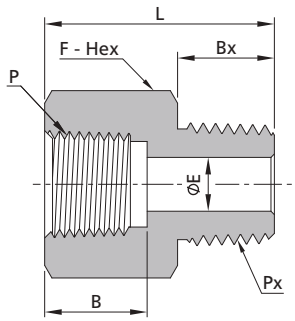

Female ISO Tapered Threads								Male ISO Tapered Threads
P-ISO Thread Size, in.	Px-ISO Thread Size, in.	Ordering Number	Dimensions, in. (mm)					Working Pressure psig (bar)
			L	F	B	Bx	E	
1/8	1/8	SS-HPA-FRT2-RT2	0.96 (24.5)	0.63 (15.9)	0.41 (10.4)	0.38 (9.7)	0.19 (4.8)	15000 (1034)
1/8	1/4	SS-HPA-FRT2-RT4	1.13 (28.8)	0.63 (15.9)	0.41 (10.4)	0.56 (14.2)	0.25 (6.4)	15000 (1034)
1/8	3/8	SS-HPA-FRT2-RT6	1.14 (29.0)	0.69 (17.5)	0.41 (10.4)	0.56 (14.2)	0.31 (7.9)	15000 (1034)
1/8	1/2	SS-HPA-FRT2-RT8	1.08 (27.4)	0.87 (22.2)	0.41 (10.4)	0.75 (19.1)	0.31 (8.0)	15000 (1034)
1/8	3/4	SS-HPA-FRT2-RT12	1.08 (27.4)	1.06 (27.0)	0.41 (10.4)	0.75 (19.1)	0.31 (8.0)	10000 (690)
1/4	1/8	SS-HPA-FRT4-RT2	1.25 (31.8)	0.94 (23.8)	0.59 (15.0)	0.38 (9.7)	0.19 (4.8)	15000 (1034)
1/4	1/4	SS-HPA-FRT4-RT4	1.37 (34.9)	0.94 (23.8)	0.59 (15.0)	0.56 (14.2)	0.25 (6.4)	15000 (1034)
1/4	3/8	SS-HPA-FRT4-RT6	1.37 (34.9)	0.94 (23.8)	0.59 (15.0)	0.56 (14.2)	0.31 (7.9)	15000 (1034)
1/4	1/2	SS-HPA-FRT4-RT8	1.58 (40.1)	0.94 (23.8)	0.59 (15.0)	0.75 (19.1)	0.38 (9.6)	15000 (1034)
1/4	3/4	SS-HPA-FRT4-RT12	1.34 (34.1)	1.06 (27.0)	0.59 (15.0)	0.75 (19.1)	0.41 (10.4)	10000 (690)
1/4	1	SS-HPA-FRT4-RT16	1.62 (41.1)	1.37 (34.9)	0.59 (15.0)	0.94 (23.9)	0.41 (10.4)	10000 (690)
3/8	1/4	SS-HPA-FRT6-RT4	1.42 (36.0)	1.13 (28.6)	0.59 (15.0)	0.56 (14.2)	0.25 (6.4)	15000 (1034)
3/8	3/8	SS-HPA-FRT6-RT6	1.42 (36.0)	1.13 (28.6)	0.59 (15.0)	0.56 (14.2)	0.31 (7.9)	15000 (1034)
3/8	1/2	SS-HPA-FRT6-RT8	1.61 (41.0)	1.13 (28.6)	0.59 (15.0)	0.75 (19.1)	0.38 (9.6)	15000 (1034)
3/8	3/4	SS-HPA-FRT6-RT12	1.61 (41.0)	1.06 (27.0)	0.59 (15.0)	0.75 (19.1)	0.54 (13.8)	10000 (690)
3/8	1	SS-HPA-FRT6-RT16	1.47 (37.3)	1.37 (34.9)	0.59 (15.0)	0.94 (23.9)	0.54 (13.8)	10000 (690)
1/2	1/4	SS-HPA-FRT8-RT4	1.72 (43.1)	1.37 (34.9)	0.78 (19.8)	0.56 (14.2)	0.25 (6.4)	15000 (1034)
1/2	3/8	SS-HPA-FRT8-RT6	1.72 (43.1)	1.37 (34.9)	0.78 (19.8)	0.56 (14.2)	0.31 (7.9)	15000 (1034)
1/2	1/2	SS-HPA-FRT8-RT8	1.89 (48.0)	1.37 (34.9)	0.78 (19.8)	0.75 (19.1)	0.38 (9.6)	15000 (1034)
1/2	3/4	SS-HPA-FRT8-RT12	1.89 (48.0)	1.37 (34.9)	0.78 (19.8)	0.75 (19.1)	0.58 (14.8)	10000 (690)
1/2	1	SS-HPA-FRT8-RT16	2.08 (52.8)	1.37 (34.9)	0.78 (19.8)	0.94 (23.9)	0.69 (17.4)	10000 (690)
3/4	1/2	SS-HPA-FRT12-RT8	1.89 (48.1)	1.50 (38.1)	0.81 (20.6)	0.75 (19.1)	0.47 (11.9)	10000 (690)
3/4	3/4	SS-HPA-FRT12-RT12	1.89 (48.1)	1.50 (38.1)	0.81 (20.6)	0.75 (19.1)	0.58 (14.8)	10000 (690)
3/4	1	SS-HPA-FRT12-RT16	2.08 (52.9)	1.50 (38.1)	0.81 (20.6)	0.94 (23.9)	0.79 (20.0)	10000 (690)
1	1/2	SS-HPA-FRT16-RT8	2.10 (53.3)	1.75 (44.5)	1.00 (25.4)	0.75 (19.1)	0.47 (11.9)	10000 (690)
1	3/4	SS-HPA-FRT16-RT12	2.10 (53.3)	1.75 (44.5)	1.00 (25.4)	0.75 (19.1)	0.58 (14.8)	10000 (690)
1	1	SS-HPA-FRT16-RT16	2.29 (58.1)	1.75 (44.5)	1.00 (25.4)	0.94 (23.9)	0.79 (20.0)	10000 (690)

Adapters

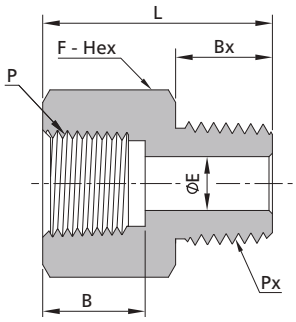

Female ISO Tapered Threads								Male NPT Threads
P-ISO Thread Size, in.	Px-NPT Size, in.	Ordering Number	Dimensions, in. (mm)					Working Pressure psig (bar)
			L	F	B	Bx	E	
1/8	1/8	SS-HPA-FRT2-NS2	0.96 (24.5)	0.63 (15.9)	0.41 (10.4)	0.38 (9.7)	0.19 (4.8)	15000 (1034)
1/8	1/4	SS-HPA-FRT2-NS4	1.13 (28.8)	0.63 (15.9)	0.41 (10.4)	0.56 (14.2)	0.25 (6.4)	15000 (1034)
1/8	3/8	SS-HPA-FRT2-NS6	1.14 (29.0)	0.69 (17.5)	0.41 (10.4)	0.56 (14.2)	0.31 (7.9)	15000 (1034)
1/8	1/2	SS-HPA-FRT2-NS8	1.08 (27.4)	0.87 (22.2)	0.41 (10.4)	0.75 (19.1)	0.31 (8.0)	15000 (1034)
1/8	3/4	SS-HPA-FRT2-NS12	1.08 (27.4)	1.06 (27.0)	0.41 (10.4)	0.75 (19.1)	0.31 (8.0)	10000 (690)
1/4	1/8	SS-HPA-FRT4-NS2	1.25 (31.8)	0.94 (23.8)	0.59 (15.0)	0.38 (9.7)	0.19 (4.8)	15000 (1034)
1/4	1/4	SS-HPA-FRT4-NS4	1.37 (34.9)	0.94 (23.8)	0.59 (15.0)	0.56 (14.2)	0.25 (6.4)	15000 (1034)
1/4	3/8	SS-HPA-FRT4-NS6	1.37 (34.9)	0.94 (23.8)	0.59 (15.0)	0.56 (14.2)	0.31 (7.9)	15000 (1034)
1/4	1/2	SS-HPA-FRT4-NS8	1.58 (40.1)	0.94 (23.8)	0.59 (15.0)	0.75 (19.1)	0.38 (9.6)	15000 (1034)
1/4	3/4	SS-HPA-FRT4-NS12	1.34 (34.1)	1.06 (27.0)	0.59 (15.0)	0.75 (19.1)	0.41 (10.4)	10000 (690)
1/4	1	SS-HPA-FRT4-NS16	1.62 (41.1)	1.37 (34.9)	0.59 (15.0)	0.94 (23.9)	0.41 (10.4)	10000 (690)
3/8	1/4	SS-HPA-FRT6-NS4	1.42 (36.0)	1.13 (28.6)	0.59 (15.0)	0.56 (14.2)	0.25 (6.4)	15000 (1034)
3/8	3/8	SS-HPA-FRT6-NS6	1.42 (36.0)	1.13 (28.6)	0.59 (15.0)	0.56 (14.2)	0.31 (7.9)	15000 (1034)
3/8	1/2	SS-HPA-FRT6-NS8	1.61 (41.0)	1.13 (28.6)	0.59 (15.0)	0.75 (19.1)	0.38 (9.6)	15000 (1034)
3/8	3/4	SS-HPA-FRT6-NS12	1.61 (41.0)	1.06 (27.0)	0.59 (15.0)	0.75 (19.1)	0.54 (13.8)	10000 (690)
3/8	1	SS-HPA-FRT6-NS16	1.47 (37.3)	1.37 (34.9)	0.59 (15.0)	0.94 (23.9)	0.54 (13.8)	10000 (690)
1/2	1/4	SS-HPA-FRT8-NS4	1.72 (43.1)	1.37 (34.9)	0.78 (19.8)	0.56 (14.2)	0.25 (6.4)	15000 (1034)
1/2	3/8	SS-HPA-FRT8-NS6	1.72 (43.1)	1.37 (34.9)	0.78 (19.8)	0.56 (14.2)	0.31 (7.9)	15000 (1034)
1/2	1/2	SS-HPA-FRT8-NS8	1.89 (48.0)	1.37 (34.9)	0.78 (19.8)	0.75 (19.1)	0.38 (9.6)	15000 (1034)
1/2	3/4	SS-HPA-FRT8-NS12	1.89 (48.0)	1.37 (34.9)	0.78 (19.8)	0.75 (19.1)	0.58 (14.8)	10000 (690)
1/2	1	SS-HPA-FRT8-NS16	2.08 (52.8)	1.37 (34.9)	0.78 (19.8)	0.94 (23.9)	0.69 (17.4)	10000 (690)
3/4	1/2	SS-HPA-FRT12-NS8	1.89 (48.1)	1.50 (38.1)	0.81 (20.6)	0.75 (19.1)	0.47 (11.9)	10000 (690)
3/4	3/4	SS-HPA-FRT12-NS12	1.89 (48.1)	1.50 (38.1)	0.81 (20.6)	0.75 (19.1)	0.58 (14.8)	10000 (690)
3/4	1	SS-HPA-FRT12-NS16	2.08 (52.9)	1.50 (38.1)	0.81 (20.6)	0.94 (23.9)	0.79 (20.0)	10000 (690)
1	1/2	SS-HPA-FRT16-NS8	2.10 (53.3)	1.75 (44.5)	1.00 (25.4)	0.75 (19.1)	0.47 (11.9)	10000 (690)
1	3/4	SS-HPA-FRT16-NS12	2.10 (53.3)	1.75 (44.5)	1.00 (25.4)	0.75 (19.1)	0.58 (14.8)	10000 (690)
1	1	SS-HPA-FRT16-NS16	2.29 (58.1)	1.75 (44.5)	1.00 (25.4)	0.94 (23.9)	0.79 (20.0)	10000 (690)

Adapters

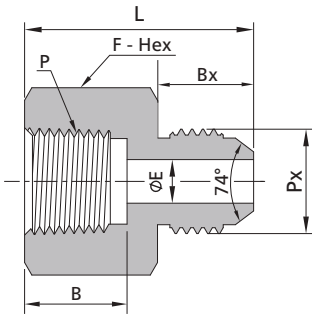

Female NPT Threads								Male JIC
P-NPT Size, in.	Px-JIC Size, in.	Ordering Number	Dimensions, in. (mm)					Working Pressure psig (bar)
			L	F	B	Bx	E	
1/8	1/4	SS-HPA-FNS2-JM4	1.09 (27.8)	0.63 (15.9)	0.41 (10.4)	0.55 (14.0)	0.17 (4.4)	15000 (1034)
1/4	1/4	SS-HPA-FNS4-JM4	1.37 (34.9)	0.94 (23.8)	0.59 (15.0)	0.55 (14.0)	0.17 (4.4)	15000 (1034)
1/4	3/8	SS-HPA-FNS4-JM6	1.32 (33.5)	0.94 (23.8)	0.59 (15.0)	0.56 (14.1)	0.23 (5.8)	15000 (1034)
3/8	3/8	SS-HPA-FNS6-JM6	1.37 (34.8)	1.13 (28.6)	0.59 (15.0)	0.56 (14.1)	0.23 (5.8)	15000 (1034)
3/8	1/2	SS-HPA-FNS6-JM8	1.47 (37.4)	1.13 (28.6)	0.59 (15.0)	0.66 (16.7)	0.31 (8.0)	15000 (1034)
1/2	1/2	SS-HPA-FNS8-JM8	1.72 (43.6)	1.37 (34.9)	0.78 (19.8)	0.66 (16.7)	0.31 (8.0)	15000 (1034)
1/2	5/8	SS-HPA-FNS8-JM10	1.82 (46.2)	1.37 (34.9)	0.78 (19.8)	0.76 (19.3)	0.41 (10.4)	15000 (1034)
1/2	3/4	SS-HPA-FNS8-JM12	1.92 (48.8)	1.37 (34.9)	0.78 (19.8)	0.86 (21.9)	0.46 (11.6)	15000 (1034)
3/4	3/4	SS-HPA-FNS12-JM12	1.89 (47.9)	1.50 (38.1)	0.81 (20.6)	0.86 (21.9)	0.61 (15.5)	10000 (690)
1	1	SS-HPA-FNS16-JM16	2.18 (55.3)	1.75 (44.5)	1.00 (25.4)	0.91 (23.1)	0.84 (21.4)	10000 (690)

Adapters ①

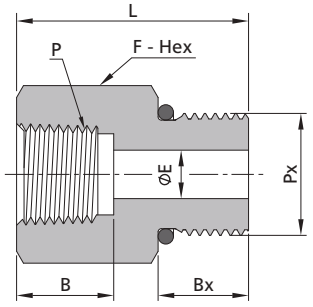

Female NPT Threads								Male SAE O-Ring
P-NPT Size, in.	Px-SAE/MS Thread Size, in.	Ordering Number	Dimensions, in. (mm)					Working Pressure psig (bar)
			L	F	B	Bx	E	
1/4	7/16-20	SS-HPA-FNS4-SH7	1.20 (30.5)	0.75 (19.1)	0.59 (15.0)	0.43 (11.0)	0.18 (4.5)	10000 (690)
3/8	9/16-18	SS-HPA-FNS6-SH9	1.29 (32.7)	0.94 (23.8)	0.59 (15.0)	0.47 (12.0)	0.30 (7.5)	10000 (690)
1/2	3/4-16	SS-HPA-FNS8-SH12	1.61 (40.9)	1.19 (30.2)	0.78 (19.8)	0.55 (14.0)	0.39 (10.0)	10000 (690)
3/4	7/8-14	SS-HPA-FNS12-SH14	1.67 (42.5)	1.50 (38.1)	0.81 (20.6)	0.63 (16.0)	0.49 (12.5)	10000 (690)

① *Male SAE O-ring Ends are supplied with a Fluorocarbon FKM O-ring as standard, other materials of O-rings available.*

Adapters

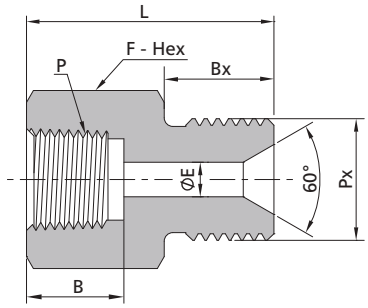

Female NPT Threads								Male Type "M"
P-NPT Size, in.	Px-SAE/MS Thread Size, in.	Ordering Number	Dimensions, in. (mm)					Working Pressure psig (bar)
			L	F	B	Bx	E	
1/8	9/16-18	SS-HPA-FNS2-TM9	1.13 (28.6)	0.63 (15.9)	0.41 (10.4)	0.50 (12.7)	0.09 (2.4)	15000 (1034)
1/4	9/16-18	SS-HPA-FNS4-TM9	1.37 (34.9)	0.94 (23.8)	0.59 (15.0)	0.50 (12.7)	0.09 (2.4)	15000 (1034)
1/4	3/4-16	SS-HPA-FNS4-TM12	1.50 (38.1)	0.94 (23.8)	0.59 (15.0)	0.63 (16.0)	0.29 (7.4)	15000 (1034)
3/8	9/16-18	SS-HPA-FNS6-TM9	1.44 (36.5)	1.13 (28.6)	0.59 (15.0)	0.50 (12.7)	0.09 (2.4)	15000 (1034)
3/8	3/4-16	SS-HPA-FNS6-TM12	1.56 (39.7)	1.13 (28.6)	0.59 (15.0)	0.63 (16.0)	0.29 (7.4)	15000 (1034)
1/2	9/16-18	SS-HPA-FNS8-TM9	1.63 (41.3)	1.37 (34.9)	0.78 (19.8)	0.50 (12.7)	0.09 (2.4)	15000 (1034)
1/2	3/4-16	SS-HPA-FNS8-TM12	1.75 (44.4)	1.37 (34.9)	0.78 (19.8)	0.63 (16.0)	0.29 (7.4)	15000 (1034)
1/2	7/8-14	SS-HPA-FNS8-TM14	1.87 (47.6)	1.37 (34.9)	0.78 (19.8)	0.76 (19.2)	0.15 (3.8)	15000 (1034)
3/4	1-12	SS-HPA-FNS12-TM16	1.87 (47.6)	1.50 (38.1)	0.81 (20.6)	0.64 (16.3)	0.39 (10.0)	10000 (690)
1	1 5/16-12	SS-HPA-FNS16-TM21	2.06 (52.4)	1.75 (44.5)	1.00 (25.4)	0.62 (15.7)	0.69 (17.5)	10000 (690)

Adapters

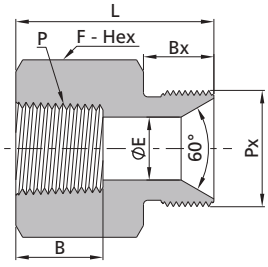

Female NPT Threads								Male ISO Parallel Threads
P-NPT Size, in.	Px-ISO Parallel Thread Size, in.	Ordering Number	Dimensions, in. (mm)					Working Pressure psig (bar)
			L	F	B	Bx	E	
1/8	1/4	SS-HPA-FNS2-HBP4	1.07 (27.1)	0.63 (15.9)	0.41 (10.4)	0.43 (11.0)	0.15 (3.8)	15000 (1034)
1/4	1/4	SS-HPA-FNS4-HBP4	1.25 (31.7)	0.94 (23.8)	0.59 (15.0)	0.43 (11.0)	0.15 (3.8)	15000 (1034)
1/4	3/8	SS-HPA-FNS4-HBP6	1.29 (32.7)	0.94 (23.8)	0.59 (15.0)	0.47 (12.0)	0.25 (6.4)	15000 (1034)
1/4	1/2	SS-HPA-FNS4-HBP8	1.32 (33.5)	1.00 (25.4)	0.59 (15.0)	0.55 (14.0)	0.37 (9.5)	15000 (1034)
3/8	1/4	SS-HPA-FNS6-HBP4	1.31 (33.2)	1.13 (28.6)	0.59 (15.0)	0.43 (11.0)	0.15 (3.8)	15000 (1034)
3/8	3/8	SS-HPA-FNS6-HBP6	1.31 (33.4)	1.13 (28.6)	0.59 (15.0)	0.47 (12.0)	0.25 (6.4)	15000 (1034)
3/8	1/2	SS-HPA-FNS6-HBP8	1.43 (36.2)	1.13 (28.6)	0.59 (15.0)	0.55 (14.0)	0.37 (9.5)	15000 (1034)
1/2	1/2	SS-HPA-FNS8-HBP8	1.69 (43.0)	1.37 (34.9)	0.78 (19.8)	0.55 (14.0)	0.37 (9.5)	15000 (1034)
1/2	3/4	SS-HPA-FNS8-HBP12	1.77 (45.0)	1.37 (34.9)	0.78 (19.8)	0.63 (16.0)	0.50 (12.7)	15000 (1034)
1/2	1	SS-HPA-FNS8-HBP16	1.89 (48.0)	1.50 (38.1)	0.78 (19.8)	0.75 (19.0)	0.63 (15.9)	15000 (1034)
3/4	3/4	SS-HPA-FNS12-HBP12	1.78 (45.1)	1.50 (38.1)	0.81 (20.6)	0.63 (16.0)	0.50 (12.7)	10000 (690)
3/4	1	SS-HPA-FNS12-HBP16	1.89 (48.1)	1.50 (38.1)	0.81 (20.6)	0.75 (19.0)	0.63 (15.9)	10000 (690)
1	1	SS-HPA-FNS16-HBP16	2.20 (56.0)	1.75 (44.5)	1.00 (25.4)	0.75 (19.0)	0.63 (15.9)	10000 (690)

Adapters①

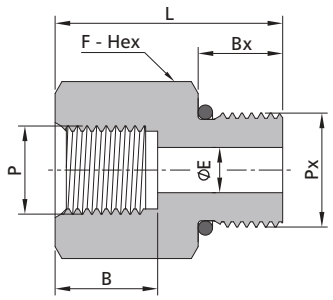

Female SAE O-Ring								Male SAE O-Ring
P-SAE/MS Thread Size, in.	Px-SAE/MS Thread Size, in.	Ordering Number	Dimensions, in. (mm)					Working Pressure psig (bar)
			L	F	B	Bx	E	
7/16-20	9/16-18	SS-HPA-US7-SH9	1.25 (31.8)	0.81 (20.6)	0.55 (14.0)	0.47 (12.0)	0.18 (4.5)	10000 (690)
7/16-20	3/4-16	SS-HPA-US7-SH12	1.25 (31.8)	0.87 (22.2)	0.55 (14.0)	0.55 (14.0)	0.18 (4.5)	10000 (690)
9/16-18	3/4-16	SS-HPA-US9-SH12	1.42 (36.0)	1.00 (25.4)	0.61 (15.5)	0.55 (14.0)	0.30 (7.5)	10000 (690)
9/16-18	7/8-14	SS-HPA-US9-SH14	1.42 (36.0)	1.00 (25.4)	0.61 (15.5)	0.63 (16.0)	0.30 (7.5)	10000 (690)
3/4-16	7/8-14	SS-HPA-US12-SH14	1.65 (41.8)	1.19 (30.2)	0.69 (17.5)	0.63 (16.0)	0.39 (10.0)	10000 (690)

① *Male SAE O-ring Ends are supplied with a Fluorocarbon FKM O-ring as standard, other materials of O-rings available.*

Adapters

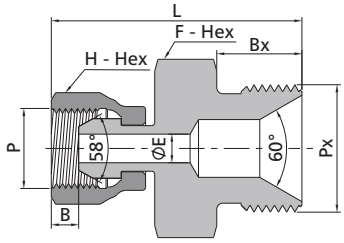

Female ISO Parallel Threads										Male ISO Parallel Threads
P-ISO Parallel Thread Size, in.	Px-ISO Parallel Thread Size, in.	Ordering Number	Dimensions, in. (mm)							Working Pressure psig (bar)
			L	F	B	H	Bx	E		
1/4	1/4	SS-HPA-SBP4-HBP4	1.42 (36.0)	0.63 (15.9)	0.18 (4.5)	0.63 (15.9)	0.43 (11.0)	0.15 (3.8)		10000 (690)
1/4	3/8	SS-HPA-SBP4-HBP6	1.54 (39.0)	0.81 (20.6)	0.18 (4.5)	0.63 (15.9)	0.47 (12.0)	0.19 (4.7)		10000 (690)
1/4	1/2	SS-HPA-SBP4-HBP8	1.62 (41.2)	1.00 (25.4)	0.18 (4.5)	0.63 (15.9)	0.55 (14.0)	0.19 (4.7)		10000 (690)
3/8	1/4	SS-HPA-SBP6-HBP4	1.57 (40.0)	0.81 (20.6)	0.25 (6.3)	0.81 (20.6)	0.43 (11.0)	0.15 (3.8)		10000 (690)
3/8	3/8	SS-HPA-SBP6-HBP6	1.61 (41.0)	0.81 (20.6)	0.25 (6.3)	0.81 (20.6)	0.47 (12.0)	0.25 (6.4)		10000 (690)
3/8	1/2	SS-HPA-SBP6-HBP8	1.75 (44.5)	1.00 (25.4)	0.25 (6.3)	0.81 (20.6)	0.55 (14.0)	0.31 (7.9)		10000 (690)
1/2	1/2	SS-HPA-SBP8-HBP8	1.82 (46.2)	1.00 (25.4)	0.28 (7.0)	1.00 (25.4)	0.55 (14.0)	0.37 (9.5)		10000 (690)
1/2	3/4	SS-HPA-SBP8-HBP12	1.98 (50.2)	1.25 (31.8)	0.28 (7.0)	1.00 (25.4)	0.63 (16.0)	0.44 (11.1)		10000 (690)
3/4	1/2	SS-HPA-SBP12-HBP8	2.02 (51.2)	1.25 (31.8)	0.35 (9.0)	1.37 (34.9)	0.55 (14.0)	0.37 (9.5)		10000 (690)
3/4	3/4	SS-HPA-SBP12-HBP12	2.19 (55.5)	1.25 (31.8)	0.35 (9.0)	1.37 (34.9)	0.63 (16.0)	0.50 (12.7)		10000 (690)
3/4	1	SS-HPA-SBP12-HBP16	2.34 (59.5)	1.50 (38.1)	0.35 (9.0)	1.37 (34.9)	0.75 (19.0)	0.63 (15.9)		10000 (690)
1	3/4	SS-HPA-SBP16-HBP12	2.50 (63.5)	1.50 (38.1)	0.43 (10.8)	1.75 (44.5)	0.63 (16.0)	0.50 (12.7)		10000 (690)
1	1	SS-HPA-SBP16-HBP16	2.62 (66.5)	1.50 (38.1)	0.43 (10.8)	1.75 (44.5)	0.75 (19.0)	0.63 (15.9)		10000 (690)

FITOK

Male Elbows

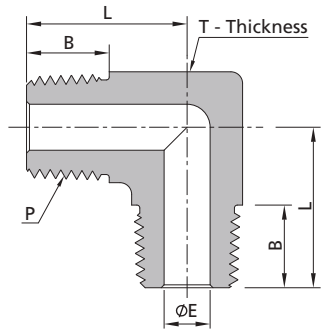

Male NPT Threads

P-NPT Size, in.	Ordering Number	Dimensions, in. (mm)				Working Pressure psig (bar)
		L	B	E	T	
1/8	SS-HPE-NS2	0.75 (19.1)	0.38 (9.7)	0.19 (4.8)	0.50 (12.7)	15000 (1034)
1/4	SS-HPE-NS4	1.00 (25.4)	0.56 (14.2)	0.25 (6.4)	0.63 (15.9)	15000 (1034)
3/8	SS-HPE-NS6	1.10 (28.0)	0.56 (14.2)	0.31 (7.9)	0.75 (19.1)	15000 (1034)
1/2	SS-HPE-NS8	1.44 (36.6)	0.75 (19.1)	0.38 (9.6)	1.00 (25.4)	15000 (1034)
3/4	SS-HPE-NS12	1.56 (39.6)	0.75 (19.1)	0.58 (14.8)	1.37 (34.9)	10000 (690)
1	SS-HPE-NS16	1.89 (48.0)	0.94 (23.9)	0.79 (20.0)	1.50 (38.1)	10000 (690)

Male Elbows

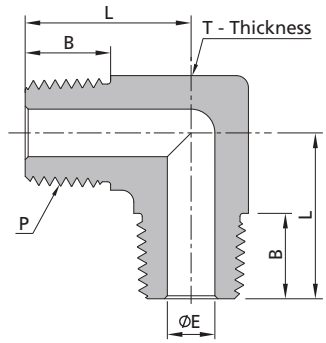

Male ISO Tapered Pipe Threads

P-ISO Thread Size, in.	Ordering Number	Dimensions, in. (mm)				Working Pressure psig (bar)
		L	B	E	T	
1/8	SS-HPE-RT2	0.75 (19.1)	0.38 (9.7)	0.19 (4.8)	0.50 (12.7)	15000 (1034)
1/4	SS-HPE-RT4	1.00 (25.4)	0.56 (14.2)	0.25 (6.4)	0.63 (15.9)	15000 (1034)
3/8	SS-HPE-RT6	1.10 (28.0)	0.56 (14.2)	0.31 (7.9)	0.75 (19.1)	15000 (1034)
1/2	SS-HPE-RT8	1.44 (36.6)	0.75 (19.1)	0.38 (9.6)	1.00 (25.4)	15000 (1034)
3/4	SS-HPE-RT12	1.56 (39.6)	0.75 (19.1)	0.58 (14.8)	1.37 (34.9)	10000 (690)
1	SS-HPE-RT16	1.89 (48.0)	0.94 (23.9)	0.79 (20.0)	1.50 (38.1)	10000 (690)

Street Elbows

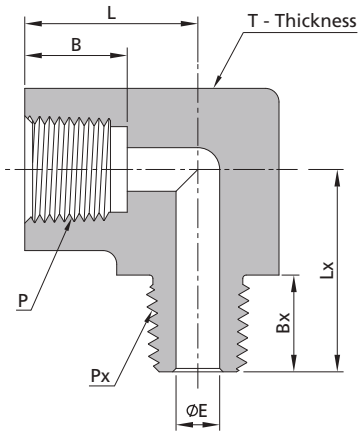

Female NPT Threads									Male NPT Threads
P-NPT Size, in.	Px-NPT Size, in.	Ordering Number	Dimensions, in. (mm)						Working Pressure psig (bar)
			L	B	E	Lx	Bx	T	
1/8	1/8	SS-HPE-FNS2-NS2	0.75 (19.1)	0.41 (10.4)	0.19 (4.8)	0.75 (19.1)	0.38 (9.7)	0.63 (15.9)	15000 (1034)
1/8	1/4	SS-HPE-FNS2-NS4	0.78 (19.8)	0.41 (10.4)	0.25 (6.4)	1.00 (25.4)	0.56 (14.2)	0.63 (15.9)	15000 (1034)
1/8	3/8	SS-HPE-FNS2-NS6	0.95 (24.2)	0.41 (10.4)	0.31 (7.9)	1.07 (27.2)	0.56 (14.2)	0.75 (19.1)	15000 (1034)
1/4	1/4	SS-HPE-FNS4-NS4	1.00 (25.4)	0.59 (15.0)	0.25 (6.4)	1.06 (27.0)	0.56 (14.2)	0.75 (19.1)	15000 (1034)
1/4	3/8	SS-HPE-FNS4-NS6	1.00 (25.4)	0.59 (15.0)	0.31 (7.9)	1.06 (27.0)	0.56 (14.2)	0.75 (19.1)	15000 (1034)
1/4	1/2	SS-HPE-FNS4-NS8	1.15 (29.1)	0.59 (15.0)	0.38 (9.6)	1.40 (35.5)	0.75 (19.1)	1.00 (25.4)	15000 (1034)
3/8	3/8	SS-HPE-FNS6-NS6	1.20 (30.6)	0.59 (15.0)	0.31 (7.9)	1.20 (30.6)	0.56 (14.2)	1.00 (25.4)	15000 (1034)
3/8	1/2	SS-HPE-FNS6-NS8	1.20 (30.6)	0.59 (15.0)	0.38 (9.6)	1.38 (35.0)	0.75 (19.1)	1.00 (25.4)	15000 (1034)
3/8	3/4	SS-HPE-FNS6-NS12	1.23 (31.2)	0.59 (15.0)	0.54 (13.8)	1.56 (39.6)	0.75 (19.1)	1.37 (34.9)	10000 (690)
1/2	1/2	SS-HPE-FNS8-NS8	1.50 (38.1)	0.78 (19.8)	0.38 (9.6)	1.61 (40.8)	0.75 (19.1)	1.37 (34.9)	15000 (1034)
1/2	3/4	SS-HPE-FNS8-NS12	1.43 (36.2)	0.78 (19.8)	0.58 (14.8)	1.61 (40.8)	0.75 (19.1)	1.37 (34.9)	10000 (690)
1/2	1	SS-HPE-FNS8-NS16	1.45 (36.9)	0.78 (19.8)	0.67 (17.0)	1.86 (47.3)	0.94 (23.9)	1.37 (34.9)	10000 (690)
3/4	3/4	SS-HPE-FNS12-NS12	1.50 (38.1)	0.81 (20.6)	0.58 (14.8)	1.77 (44.9)	0.75 (19.1)	1.50 (38.1)	10000 (690)
3/4	1	SS-HPE-FNS12-NS16	1.63 (41.4)	0.81 (20.6)	0.79 (20.0)	1.86 (47.3)	0.94 (23.9)	1.50 (38.1)	10000 (690)
1	1	SS-HPE-FNS16-NS16	1.91 (48.5)	1.00 (25.4)	0.79 (20.0)	2.07 (52.5)	0.94 (23.9)	1.75 (44.5)	10000 (690)

Street Elbows

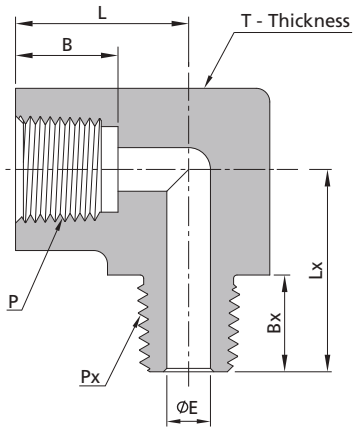

Female ISO Tapered Pipe Threads								Male ISO Tapered Threads
P-ISO Thread Size, in.	Px-ISO Thread Size, in.	Ordering Number	Dimensions, in. (mm)					Working Pressure psig (bar)
			L	B	E	Lx	Bx	T	
1/8	1/8	SS-HPE-FRT2-RT2	0.75 (19.1)	0.41 (10.4)	0.19 (4.8)	0.75 (19.1)	0.38 (9.7)	0.63 (15.9)	15000 (1034)
1/8	1/4	SS-HPE-FRT2-RT4	0.78 (19.8)	0.41 (10.4)	0.25 (6.4)	1.00 (25.4)	0.56 (14.2)	0.63 (15.9)	15000 (1034)
1/8	3/8	SS-HPE-FRT2-RT6	0.95 (24.2)	0.41 (10.4)	0.31 (7.9)	1.07 (27.2)	0.56 (14.2)	0.75 (19.1)	15000 (1034)
1/4	1/4	SS-HPE-FRT4-RT4	1.00 (25.4)	0.59 (15.0)	0.25 (6.4)	1.06 (27.0)	0.56 (14.2)	0.75 (19.1)	15000 (1034)
1/4	3/8	SS-HPE-FRT4-RT6	1.00 (25.4)	0.59 (15.0)	0.31 (7.9)	1.06 (27.0)	0.56 (14.2)	0.75 (19.1)	15000 (1034)
1/4	1/2	SS-HPE-FRT4-RT8	1.15 (29.1)	0.59 (15.0)	0.38 (9.6)	1.40 (35.5)	0.75 (19.1)	1.00 (25.4)	15000 (1034)
3/8	3/8	SS-HPE-FRT6-RT6	1.20 (30.6)	0.59 (15.0)	0.31 (7.9)	1.20 (30.6)	0.56 (14.2)	1.00 (25.4)	15000 (1034)
3/8	1/2	SS-HPE-FRT6-RT8	1.20 (30.6)	0.59 (15.0)	0.38 (9.6)	1.38 (35.0)	0.75 (19.1)	1.00 (25.4)	15000 (1034)
3/8	3/4	SS-HPE-FRT6-RT12	1.23 (31.2)	0.59 (15.0)	0.54 (13.8)	1.56 (39.6)	0.75 (19.1)	1.37 (34.9)	10000 (690)
1/2	1/2	SS-HPE-FRT8-RT8	1.50 (38.1)	0.78 (19.8)	0.38 (9.6)	1.61 (40.8)	0.75 (19.1)	1.37 (34.9)	15000 (1034)
1/2	3/4	SS-HPE-FRT8-RT12	1.43 (36.2)	0.78 (19.8)	0.58 (14.8)	1.61 (40.8)	0.75 (19.1)	1.37 (34.9)	10000 (690)
1/2	1	SS-HPE-FRT8-RT16	1.45 (36.9)	0.78 (19.8)	0.67 (17.0)	1.86 (47.3)	0.94 (23.9)	1.37 (34.9)	10000 (690)
3/4	3/4	SS-HPE-FRT12-RT12	1.50 (38.1)	0.81 (20.6)	0.58 (14.8)	1.77 (44.9)	0.75 (19.1)	1.50 (38.1)	10000 (690)
3/4	1	SS-HPE-FRT12-RT16	1.63 (41.4)	0.81 (20.6)	0.79 (20.0)	1.86 (47.3)	0.94 (23.9)	1.50 (38.1)	10000 (690)
1	1	SS-HPE-FRT16-RT16	1.91 (48.5)	1.00 (25.4)	0.79 (20.0)	2.07 (52.5)	0.94 (23.9)	1.75 (44.5)	10000 (690)

Female Elbows

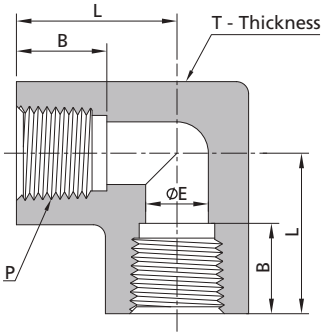

Female NPT Threads						
P-NPT Size, in.	Ordering Number	Dimensions, in. (mm)				Working Pressure psig (bar)
		L	B	E	T	
1/8	SS-HPE-FNS2	0.75 (19.1)	0.41 (10.4)	0.31 (8.0)	0.63 (15.9)	15000 (1034)
1/4	SS-HPE-FNS4	1.00 (25.4)	0.59 (15.0)	0.41 (10.4)	0.75 (19.1)	15000 (1034)
3/8	SS-HPE-FNS6	1.20 (30.6)	0.59 (15.0)	0.54 (13.8)	1.00 (25.4)	15000 (1034)
1/2	SS-HPE-FNS8	1.50 (38.1)	0.78 (19.8)	0.67 (17.0)	1.37 (34.9)	15000 (1034)
3/4	SS-HPE-FNS12	1.50 (38.1)	0.81 (20.6)	0.88 (22.3)	1.50 (38.1)	10000 (690)
1	SS-HPE-FNS16	1.91 (48.5)	1.00 (25.4)	1.11 (28.1)	1.75 (44.5)	10000 (690)

Female ISO Tapered Threads						
P-ISO Thread Size, in.	Ordering Number	Dimensions, in. (mm)				Working Pressure psig (bar)
		L	B	E	T	
1/8	SS-HPE-FRT2	0.75 (19.1)	0.41 (10.4)	0.31 (8.0)	0.63 (15.9)	15000 (1034)
1/4	SS-HPE-FRT4	1.00 (25.4)	0.59 (15.0)	0.41 (10.4)	0.75 (19.1)	15000 (1034)
3/8	SS-HPE-FRT6	1.20 (30.6)	0.59 (15.0)	0.54 (13.8)	1.00 (25.4)	15000 (1034)
1/2	SS-HPE-FRT8	1.50 (38.1)	0.78 (19.8)	0.69 (17.4)	1.37 (34.9)	15000 (1034)
3/4	SS-HPE-FRT12	1.50 (38.1)	0.81 (20.6)	0.90 (22.8)	1.50 (38.1)	10000 (690)
1	SS-HPE-FRT16	1.91 (48.5)	1.00 (25.4)	1.13 (28.7)	1.75 (44.5)	10000 (690)

Male Tees

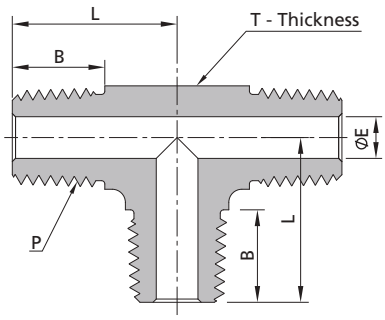

Male NPT Threads

P-NPT Size, in.	Ordering Number	Dimensions, in. (mm)				Working Pressure psig (bar)
		L	B	E	T	
1/8	SS-HPT-NS2	0.75 (19.1)	0.38 (9.7)	0.19 (4.8)	0.50 (12.7)	15000 (1034)
1/4	SS-HPT-NS4	1.00 (25.4)	0.56 (14.2)	0.25 (6.4)	0.63 (15.9)	15000 (1034)
3/8	SS-HPT-NS6	1.10 (28.0)	0.56 (14.2)	0.31 (7.9)	0.75 (19.1)	15000 (1034)
1/2	SS-HPT-NS8	1.44 (36.6)	0.75 (19.1)	0.38 (9.6)	1.00 (25.4)	15000 (1034)
3/4	SS-HPT-NS12	1.56 (39.6)	0.75 (19.1)	0.58 (14.8)	1.37 (34.9)	10000 (690)
1	SS-HPT-NS16	1.89 (48.0)	0.94 (23.9)	0.79 (20.0)	1.50 (38.1)	10000 (690)

Male ISO Tapered Threads

P-ISO Thread Size, in.	Ordering Number	Dimensions, in. (mm)				Working Pressure psig (bar)
		L	B	E	T	
1/8	SS-HPT-RT2	0.75 (19.1)	0.38 (9.7)	0.19 (4.8)	0.50 (12.7)	15000 (1034)
1/4	SS-HPT-RT4	1.00 (25.4)	0.56 (14.2)	0.25 (6.4)	0.63 (15.9)	15000 (1034)
3/8	SS-HPT-RT6	1.10 (28.0)	0.56 (14.2)	0.31 (7.9)	0.75 (19.1)	15000 (1034)
1/2	SS-HPT-RT8	1.44 (36.6)	0.75 (19.1)	0.38 (9.6)	1.00 (25.4)	15000 (1034)
3/4	SS-HPT-RT12	1.56 (39.6)	0.75 (19.1)	0.58 (14.8)	1.37 (34.9)	10000 (690)
1	SS-HPT-RT16	1.89 (48.0)	0.94 (23.9)	0.79 (20.0)	1.50 (38.1)	10000 (690)

Male Street Tees

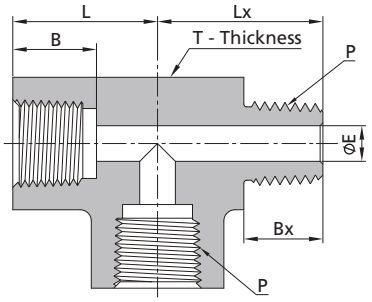

NPT Threads

P-NPT Size, in.	Ordering Number	Dimensions, in. (mm)						Working Pressure psig (bar)
		L	B	Lx	Bx	E	T	
1/8	SS-HPT-FNS2-NS2-FNS2	0.75 (19.1)	0.41 (10.4)	0.75 (19.1)	0.38 (9.7)	0.19 (4.8)	0.63 (15.9)	15000 (1034)
1/4	SS-HPT-FNS4-NS4-FNS4	1.00 (25.4)	0.59 (15.0)	1.06 (27.0)	0.56 (14.2)	0.25 (6.4)	0.75 (19.1)	15000 (1034)
3/8	SS-HPT-FNS6-NS6-FNS6	1.20 (30.6)	0.59 (15.0)	1.20 (30.6)	0.56 (14.2)	0.31 (7.9)	1.00 (25.4)	15000 (1034)
1/2	SS-HPT-FNS8-NS8-FNS8	1.50 (38.1)	0.78 (19.8)	1.61 (40.8)	0.75 (19.1)	0.38 (9.6)	1.37 (34.9)	15000 (1034)
3/4	SS-HPT-FNS12-NS12-FNS12	1.50 (38.1)	0.81 (20.6)	1.77 (44.9)	0.75 (19.1)	0.58 (14.8)	1.50 (38.1)	10000 (690)
1	SS-HPT-FNS16-NS16-FNS16	1.91 (48.5)	1.00 (25.4)	2.07 (52.5)	0.94 (23.9)	0.79 (20.0)	1.75 (44.5)	10000 (690)

ISO Tapered Pipe Threads

P-ISO Thread Size, in.	Ordering Number	Dimensions, in. (mm)						Working Pressure psig (bar)
		L	B	Lx	Bx	E	T	
1/8	SS-HPT-FRT2-RT2-FRT2	0.75 (19.1)	0.41 (10.4)	0.75 (19.1)	0.38 (9.7)	0.19 (4.8)	0.63 (15.9)	15000 (1034)
1/4	SS-HPT-FRT4-RT4-FRT4	1.00 (25.4)	0.59 (15.0)	1.06 (27.0)	0.56 (14.2)	0.25 (6.4)	0.75 (19.1)	15000 (1034)
3/8	SS-HPT-FRT6-RT6-FRT6	1.20 (30.6)	0.59 (15.0)	1.20 (30.6)	0.56 (14.2)	0.31 (7.9)	1.00 (25.4)	15000 (1034)
1/2	SS-HPT-FRT8-RT8-FRT8	1.50 (38.1)	0.78 (19.8)	1.61 (40.8)	0.75 (19.1)	0.38 (9.6)	1.37 (34.9)	15000 (1034)
3/4	SS-HPT-FRT12-RT12-FRT12	1.50 (38.1)	0.81 (20.6)	1.77 (44.9)	0.75 (19.1)	0.58 (14.8)	1.50 (38.1)	10000 (690)
1	SS-HPT-FRT16-RT16-FRT16	1.91 (48.5)	1.00 (25.4)	2.07 (52.5)	0.94 (23.9)	0.79 (20.0)	1.75 (44.5)	10000 (690)

FITOK

Male Branch Tees

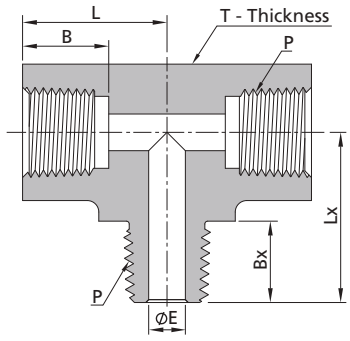

NPT Threads

P-NPT Size, in.	Ordering Number	Dimensions, in. (mm)						Working Pressure psig (bar)
		L	B	Lx	Bx	E	T	
1/8	SS-HPT-FNS2-FNS2-NS2	0.75 (19.1)	0.41 (10.4)	0.75 (19.1)	0.38 (9.7)	0.19 (4.8)	0.63 (15.9)	15000 (1034)
1/4	SS-HPT-FNS4-FNS4-NS4	1.00 (25.4)	0.59 (15.0)	1.06 (27.0)	0.56 (14.2)	0.25 (6.4)	0.75 (19.1)	15000 (1034)
3/8	SS-HPT-FNS6-FNS6-NS6	1.20 (30.6)	0.59 (15.0)	1.20 (30.6)	0.56 (14.2)	0.31 (7.9)	1.00 (25.4)	15000 (1034)
1/2	SS-HPT-FNS8-FNS8-NS8	1.50 (38.1)	0.78 (19.8)	1.61 (40.8)	0.75 (19.1)	0.38 (9.6)	1.37 (34.9)	15000 (1034)
3/4	SS-HPT-FNS12-FNS12-NS12	1.50 (38.1)	0.81 (20.6)	1.77 (44.9)	0.75 (19.1)	0.58 (14.8)	1.50 (38.1)	10000 (690)
1	SS-HPT-FNS16-FNS16-NS16	1.91 (48.5)	1.00 (25.4)	2.07 (52.5)	0.94 (23.9)	0.79 (20.0)	1.75 (44.5)	10000 (690)

ISO Tapered Pipe Threads

P-ISO Thread Size, in.	Ordering Number	Dimensions, in. (mm)						Working Pressure psig (bar)
		L	B	Lx	Bx	E	T	
1/8	SS-HPT-FRT2-FRT2-RT2	0.75 (19.1)	0.41 (10.4)	0.75 (19.1)	0.38 (9.7)	0.19 (4.8)	0.63 (15.9)	15000 (1034)
1/4	SS-HPT-FRT4-FRT4-RT4	1.00 (25.4)	0.59 (15.0)	1.06 (27.0)	0.56 (14.2)	0.25 (6.4)	0.75 (19.1)	15000 (1034)
3/8	SS-HPT-FRT6-FRT6-RT6	1.20 (30.6)	0.59 (15.0)	1.20 (30.6)	0.56 (14.2)	0.31 (7.9)	1.00 (25.4)	15000 (1034)
1/2	SS-HPT-FRT8-FRT8-RT8	1.50 (38.1)	0.78 (19.8)	1.61 (40.8)	0.75 (19.1)	0.38 (9.6)	1.37 (34.9)	15000 (1034)
3/4	SS-HPT-FRT12-FRT12-RT12	1.50 (38.1)	0.81 (20.6)	1.77 (44.9)	0.75 (19.1)	0.58 (14.8)	1.50 (38.1)	10000 (690)
1	SS-HPT-FRT16-FRT16-RT16	1.91 (48.5)	1.00 (25.4)	2.07 (52.5)	0.94 (23.9)	0.79 (20.0)	1.75 (44.5)	10000 (690)

Female Tees

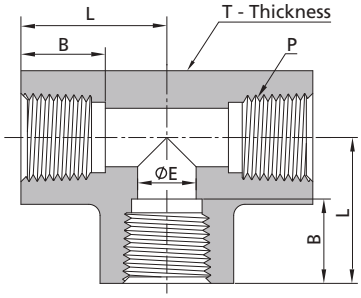

Female NPT Threads

P-NPT Size, in.	Ordering Number	Dimensions, in. (mm)				Working Pressure psig (bar)
		L	B	E	T	
1/8	SS-HPT-FNS2	0.75 (19.1)	0.41 (10.4)	0.31 (8.0)	0.63 (15.9)	15000 (1034)
1/4	SS-HPT-FNS4	1.00 (25.4)	0.59 (15.0)	0.41 (10.4)	0.75 (19.1)	15000 (1034)
3/8	SS-HPT-FNS6	1.20 (30.6)	0.59 (15.0)	0.54 (13.8)	1.00 (25.4)	15000 (1034)
1/2	SS-HPT-FNS8	1.50 (38.1)	0.78 (19.8)	0.67 (17.0)	1.37 (34.9)	15000 (1034)
3/4	SS-HPT-FNS12	1.50 (38.1)	0.81 (20.6)	0.88 (22.3)	1.50 (38.1)	10000 (690)
1	SS-HPT-FNS16	1.91 (48.5)	1.00 (25.4)	1.11 (28.1)	1.75 (44.5)	10000 (690)

Female ISO Tapered Pipe Threads						
P-ISO Thread Size, in.	Ordering Number	Dimensions, in. (mm)				Working Pressure psig (bar)
		L	B	E	T	
1/8	SS-HPT-FRT2	0.75 (19.1)	0.41 (10.4)	0.31 (8.0)	0.63 (15.9)	15000 (1034)
1/4	SS-HPT-FRT4	1.00 (25.4)	0.59 (15.0)	0.41 (10.4)	0.75 (19.1)	15000 (1034)
3/8	SS-HPT-FRT6	1.20 (30.6)	0.59 (15.0)	0.54 (13.8)	1.00 (25.4)	15000 (1034)
1/2	SS-HPT-FRT8	1.50 (38.1)	0.78 (19.8)	0.69 (17.4)	1.37 (34.9)	15000 (1034)
3/4	SS-HPT-FRT12	1.50 (38.1)	0.81 (20.6)	0.90 (22.8)	1.50 (38.1)	10000 (690)
1	SS-HPT-FRT16	1.91 (48.5)	1.00 (25.4)	1.13 (28.7)	1.75 (44.5)	10000 (690)

Female Crosses

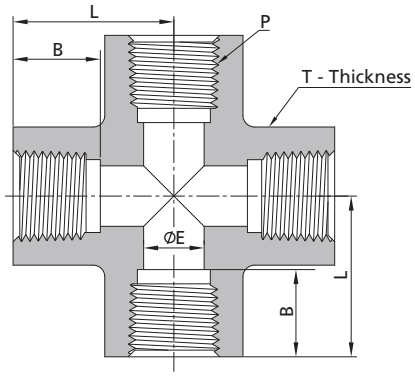

Female NPT Threads						
P-NPT Size, in.	Ordering Number	Dimensions, in. (mm)				Working Pressure psig (bar)
		L	B	E	T	
1/8	SS-HPX-FNS2	0.75 (19.1)	0.41 (10.4)	0.31 (8.0)	0.63 (15.9)	15000 (1034)
1/4	SS-HPX-FNS4	1.00 (25.4)	0.59 (15.0)	0.41 (10.4)	0.75 (19.1)	15000 (1034)
3/8	SS-HPX-FNS6	1.20 (30.6)	0.59 (15.0)	0.54 (13.8)	1.00 (25.4)	15000 (1034)
1/2	SS-HPX-FNS8	1.50 (38.1)	0.78 (19.8)	0.67 (17.0)	1.37 (34.9)	15000 (1034)
3/4	SS-HPX-FNS12	1.50 (38.1)	0.81 (20.6)	0.88 (22.3)	1.50 (38.1)	10000 (690)
1	SS-HPX-FNS16	1.91 (48.5)	1.00 (25.4)	1.11 (28.1)	1.75 (44.5)	10000 (690)

Female ISO Tapered Pipe Threads						
P-ISO Thread Size, in.	Ordering Number	Dimensions, in. (mm)				Working Pressure psig (bar)
		L	B	E	T	
1/8	SS-HPX-FRT2	0.75 (19.1)	0.41 (10.4)	0.31 (8.0)	0.63 (15.9)	15000 (1034)
1/4	SS-HPX-FRT4	1.00 (25.4)	0.59 (15.0)	0.41 (10.4)	0.75 (19.1)	15000 (1034)
3/8	SS-HPX-FRT6	1.20 (30.6)	0.59 (15.0)	0.54 (13.8)	1.00 (25.4)	15000 (1034)
1/2	SS-HPX-FRT8	1.50 (38.1)	0.78 (19.8)	0.69 (17.4)	1.37 (34.9)	15000 (1034)
3/4	SS-HPX-FRT12	1.50 (38.1)	0.81 (20.6)	0.90 (22.8)	1.50 (38.1)	10000 (690)
1	SS-HPX-FRT16	1.91 (48.5)	1.00 (25.4)	1.13 (28.7)	1.75 (44.5)	10000 (690)

Note: All dimensions are for reference only and subject to change.

Connection Information

Please see A-02.

Ordering Number Description

SS – HPN – NS6 – RT4 – □ – □

Material	Fitting Type	P1 Type	P1 Size	P2 Type	P2 Size	P3 and P4
SS 316 SS	HPP Pipe Plugs HPN Hex Nipples HPL Hex Long Nipples HPC Pipe Caps HMC Pipe Cap Assemblies (Moveable Insert) HPG Hex Couplings HPZ Zero-Clearance Unions HPA Adapters HPE Elbows HPT Tees HPX Crosses	NS Male NPT FNS Female NPT RT Male ISO Tapered Thread FRT Female ISO Tapered Thread JM Male JIC JF Female JIC SH Male SAE O-Ring US Female SAE O-Ring TM Male Type "M" HBP Male ISO Parallel Thread SBP Female ISO Parallel Thread	NS, FNS, RT, FRT, HBP and SBP Sizes 2 1/8" 4 1/4" 6 3/8" 8 1/2" 12 3/4" 16 1" SH, US and TM Thread Sizes 7 7/16-20 9 9/16-18 12 3/4-16 14 7/8-14 16 1-12 21 1 5/16-12 JM and JF Sizes 4 1/4" 6 3/8" 8 1/2" 10 5/8" 12 3/4" 16 1"	Specified in the same way as the P1	Specified in the same way as the P1	Specified in the same way as the P1

Note: "Ordering Number Description" is a reference to understand the combination rules of FITOK product part number. Not all combinations are available.

AMH Series Adapter Fittings



Contents

Female to Female - FFC

Female High Pressure to Female Medium Pressure
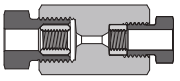
A-73

Female High Pressure to Female 20D Series
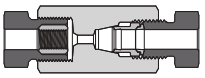
A-74

Female High Pressure to Female NPT
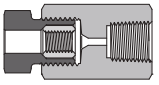
A-74

Female Medium Pressure to Female 20D Series
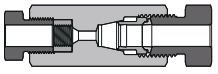
A-75

Female Medium Pressure to Female NPT
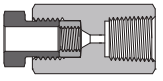
A-76

Female to Male - FMA

Female High Pressure to Male High Pressure
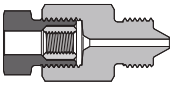
A-77

Female High Pressure to T60H Series Coned and Threaded Nipples
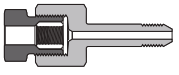
A-77

Female High Pressure to Male Medium Pressure
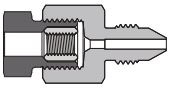
A-78

Female High Pressure to Male 20D Series
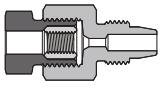
A-78

Female High Pressure to Male NPT
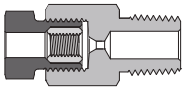
A-79

Female High Pressure to Male Type "M"
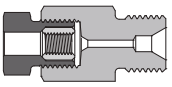
A-79

Female Medium Pressure to Male High Pressure
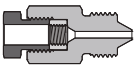
A-80

Female Medium Pressure to Male Medium Pressure
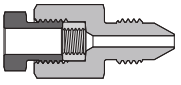
A-81

Female Medium Pressure to Medium Pressure Coned and Threaded Nipples
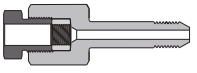
A-82

Female Medium Pressure to Male 20D Series
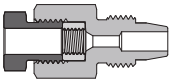
A-83

Female Medium Pressure to Male NPT
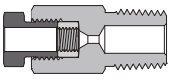
A-84

Female Medium Pressure to Male Type "M"
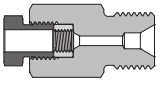
A-85

Female 20D Series to Male High Pressure
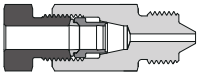
A-85

Female 20D Series to Male Medium Pressure
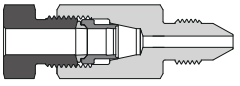
A-86

Female 20D Series to Male 20D Series
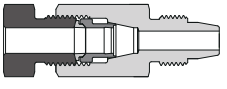
A-87

Female NPT to Male High Pressure
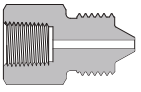
A-88

Female NPT to T60H Series Coned and Threaded Nipples

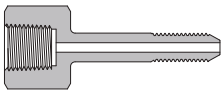

A-89

Female NPT to Male Medium Pressure

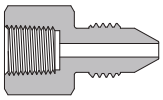

A-90

Female NPT to Medium Pressure Coned and Threaded Nipples

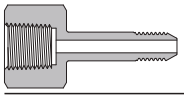

A-91

Female NPT to Male 20D Series

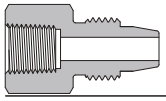

A-92

Male to Male - MMA

Male High Pressure to Male High Pressure

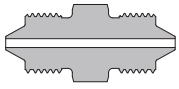

A-93

Male High Pressure to Male Medium Pressure

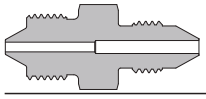

A-93

Male High Pressure to Male 20D Series



A-94

Male High Pressure to Male NPT

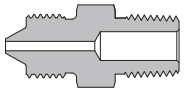

A-94

Male High Pressure to Male JIC

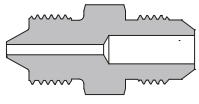

A-95

Male High Pressure to Male Type "M"

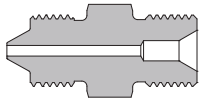

A-96

Male High Pressure to Male ISO Parallel

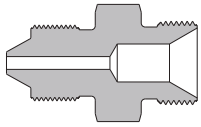

A-96

Male Medium Pressure to Male Medium Pressure

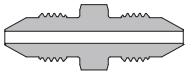

A-97

Male Medium Pressure to Male 20D Series

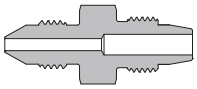

A-98

Male Medium Pressure to Male NPT

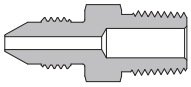

A-99

Male Medium Pressure to Male JIC

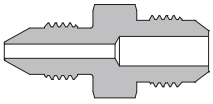

A-100

Male Medium Pressure to Male Type "M"

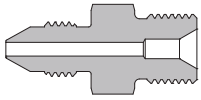

A-101

Male Medium Pressure to Male ISO Parallel

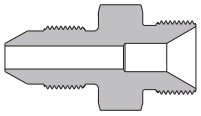

A-102

Male 20D Series to Male 20D Series

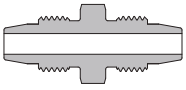

A-102

Male 20D Series to Male NPT

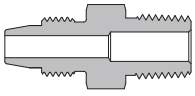

A-103

Male 20D Series to Male JIC

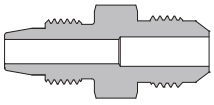

A-104

Male 20D Series to Male Type "M"

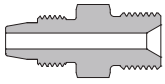

A-105

Ordering Number Description

A-106

FITOK

Features

◎ High tensile 316 stainless steel as standard material, other materials available upon request
◎ Every fitting marked with size, material and trace ID

Working Pressure

The working pressure of AMH series adapter fittings is shown in the **"Ordering Information and Dimensions"**.

Connection Information

Please see A-02.

Cautions

◎ Do not loosen or tighten fittings when the system is pressurized
◎ Always use proper thread sealants on tapered pipe threads

Ordering Information and Dimensions

Dimensions are for reference only and are subject to change.

Female to Female - FFC

Female High Pressure to Female Medium Pressure

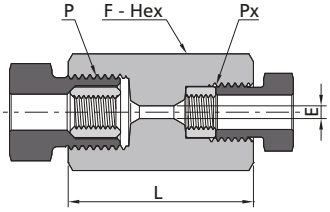

Female High Pressure						Female Medium Pressure
P-Connection	Px-Connection	Ordering Number	Dimensions, in. (mm)			Working Pressure psig (bar)
			L	F	E	
HF4	MF4	SS-FFC-HF4-MF4	1.37 (34.9)	0.75 (19.1)	0.09 (2.4)	20000 (1379)
HF4	MF6	SS-FFC-HF4-MF6	1.56 (39.7)	0.75 (19.1)	0.09 (2.4)	20000 (1379)
HF4	MF9	SS-FFC-HF4-MF9	1.81 (46.0)	1.00 (25.4)	0.09 (2.4)	20000 (1379)
HF4	MF12	SS-FFC-HF4-MF12	2.06 (52.4)	1.37 (34.9)	0.09 (2.4)	20000 (1379)
HF4	MF16	SS-FFC-HF4-MF16	2.56 (65.1)	1.75 (44.5)	0.09 (2.4)	20000 (1379)
HF6	MF4	SS-FFC-HF6-MF4	1.63 (41.3)	1.00 (25.4)	0.11 (2.8)	20000 (1379)
HF6	MF6	SS-FFC-HF6-MF6	1.81 (46.0)	1.00 (25.4)	0.13 (3.2)	20000 (1379)
HF6	MF9	SS-FFC-HF6-MF9	2.06 (52.4)	1.00 (25.4)	0.13 (3.2)	20000 (1379)
HF6	MF12	SS-FFC-HF6-MF12	2.31 (58.7)	1.37 (34.9)	0.13 (3.2)	20000 (1379)
HF6	MF16	SS-FFC-HF6-MF16	2.81 (71.4)	1.75 (44.5)	0.13 (3.2)	20000 (1379)
HF9	MF4	SS-FFC-HF9-MF4	1.81 (46.0)	1.37 (34.9)	0.11 (2.8)	20000 (1379)
HF9	MF6	SS-FFC-HF9-MF6	1.94 (49.2)	1.37 (34.9)	0.19 (4.8)	20000 (1379)
HF9	MF9	SS-FFC-HF9-MF9	2.25 (57.2)	1.37 (34.9)	0.19 (4.8)	20000 (1379)
HF9	MF12	SS-FFC-HF9-MF12	2.44 (61.9)	1.37 (34.9)	0.19 (4.8)	20000 (1379)
HF9	MF16	SS-FFC-HF9-MF16	3.00 (76.2)	1.75 (44.5)	0.19 (4.8)	20000 (1379)

Female High Pressure to Female 20D Series

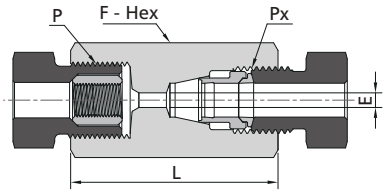

Female High Pressure						Female 20D Series
P-Connection	Px-Connection	Ordering Number	Dimensions, in. (mm)			Working Pressure psig (bar)
			L	F	E	
HF4	DFF2	SS-FFC-HF4-DFF2	1.35(34.2)	0.75 (19.1)	0.09 (2.4)	15000 (1034)
HF4	DFF4	SS-FFC-HF4-DFF4	1.67(42.3)	0.75 (19.1)	0.09 (2.4)	20000 (1379)
HF4	DFF6	SS-FFC-HF4-DFF6	1.76(44.7)	0.75 (19.1)	0.09 (2.4)	20000 (1379)
HF4	DFF8	SS-FFC-HF4-DFF8	1.93(49.1)	1.00 (25.4)	0.09 (2.4)	20000 (1379)
HF6	DFF2	SS-FFC-HF6-DFF2	1.66(42.1)	1.00 (25.4)	0.09 (2.4)	15000 (1034)
HF6	DFF4	SS-FFC-HF6-DFF4	1.92(48.7)	1.00 (25.4)	0.13 (3.2)	20000 (1379)
HF6	DFF6	SS-FFC-HF6-DFF6	1.94(49.4)	1.00 (25.4)	0.13 (3.2)	20000 (1379)
HF6	DFF8	SS-FFC-HF6-DFF8	2.18(55.4)	1.00 (25.4)	0.13 (3.2)	20000 (1379)
HF9	DFF2	SS-FFC-HF9-DFF2	1.85(46.9)	1.37 (34.9)	0.09 (2.4)	15000 (1034)
HF9	DFF4	SS-FFC-HF9-DFF4	2.04(51.8)	1.37 (34.9)	0.19 (4.8)	20000 (1379)
HF9	DFF6	SS-FFC-HF9-DFF6	2.13(54.2)	1.37 (34.9)	0.19 (4.8)	20000 (1379)
HF9	DFF8	SS-FFC-HF9-DFF8	2.31(58.6)	1.37 (34.9)	0.19 (4.8)	20000 (1379)

Female High Pressure to Female NPT

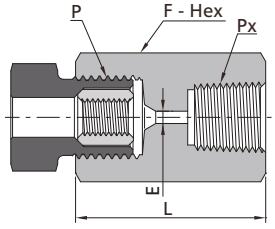

Female High Pressure						Female NPT
P-Connection	Px-Connection	Ordering Number	Dimensions, in. (mm)			Working Pressure psig (bar)
			L	F	E	
HF4	FNS2	SS-FFC-HF4-FNS2	1.37 (34.9)	0.75 (19.1)	0.09 (2.4)	15000 (1034)
HF4	FNS4	SS-FFC-HF4-FNS4	1.63 (41.3)	0.94 (23.8)	0.09 (2.4)	15000 (1034)
HF4	FNS6	SS-FFC-HF4-FNS6	1.63 (41.3)	1.13 (28.6)	0.09 (2.4)	15000 (1034)
HF4	FNS8	SS-FFC-HF4-FNS8	2.00 (50.8)	1.37 (34.9)	0.09 (2.4)	15000 (1034)
HF4	FNS12	SS-FFC-HF4-FNS12	2.00 (50.8)	1.50 (38.1)	0.09 (2.4)	10000 (690)
HF4	FNS16	SS-FFC-HF4-FNS16	2.37 (60.3)	1.75 (44.5)	0.09 (2.4)	10000 (690)
HF6	FNS2	SS-FFC-HF6-FNS2	1.63 (41.3)	1.00 (25.4)	0.13 (3.2)	15000 (1034)
HF6	FNS4	SS-FFC-HF6-FNS4	1.87 (47.6)	1.00 (25.4)	0.13 (3.2)	15000 (1034)
HF6	FNS6	SS-FFC-HF6-FNS6	1.87 (47.6)	1.13 (28.6)	0.13 (3.2)	15000 (1034)
HF6	FNS8	SS-FFC-HF6-FNS8	2.13 (54.0)	1.37 (34.9)	0.13 (3.2)	15000 (1034)
HF6	FNS12	SS-FFC-HF6-FNS12	2.13 (54.0)	1.50 (38.1)	0.13 (3.2)	10000 (690)
HF6	FNS16	SS-FFC-HF6-FNS16	2.25 (57.2)	1.75 (44.5)	0.13 (3.2)	10000 (690)
HF9	FNS2	SS-FFC-HF9-FNS2	1.81 (46.0)	1.37 (34.9)	0.19 (4.8)	15000 (1034)
HF9	FNS4	SS-FFC-HF9-FNS4	2.00 (50.8)	1.37 (34.9)	0.19 (4.8)	15000 (1034)
HF9	FNS6	SS-FFC-HF9-FNS6	2.00 (50.8)	1.37 (34.9)	0.19 (4.8)	15000 (1034)
HF9	FNS8	SS-FFC-HF9-FNS8	2.37 (60.3)	1.37 (34.9)	0.19 (4.8)	15000 (1034)
HF9	FNS12	SS-FFC-HF9-FNS12	2.37 (60.3)	1.50 (38.1)	0.19 (4.8)	10000 (690)
HF9	FNS16	SS-FFC-HF9-FNS16	2.50 (63.5)	1.75 (44.5)	0.19 (4.8)	10000 (690)

FITOK

Female Medium Pressure to Female 20D Series

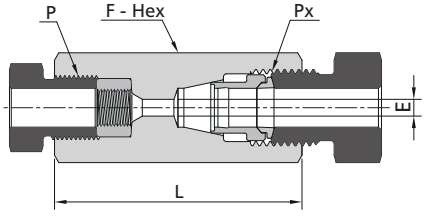

Female Medium Pressure						Female 20D Series
P-Connection	Px-Connection	Ordering Number	Dimensions, in. (mm)			Working Pressure psig (bar)
			L	F	E	
MF4	DFF2	SS-FFC-MF4-DFF2	1.41(35.8)	0.63 (15.9)	0.09 (2.4)	15000 (1034)
MF4	DFF4	SS-FFC-MF4-DFF4	1.67(42.3)	0.63 (15.9)	0.11 (2.8)	20000 (1379)
MF4	DFF6	SS-FFC-MF4-DFF6	1.76(44.7)	0.75 (19.1)	0.11 (2.8)	20000 (1379)
MF4	DFF8	SS-FFC-MF4-DFF8	1.93(49.1)	1.00 (25.4)	0.11 (2.8)	20000 (1379)
MF6	DFF2	SS-FFC-MF6-DFF2	1.59(40.5)	0.75 (19.1)	0.09 (2.4)	15000 (1034)
MF6	DFF4	SS-FFC-MF6-DFF4	1.85(47.1)	0.75 (19.1)	0.19 (4.8)	20000 (1379)
MF6	DFF6	SS-FFC-MF6-DFF6	1.89(47.9)	0.75 (19.1)	0.20 (5.2)	20000 (1379)
MF6	DFF8	SS-FFC-MF6-DFF8	2.06(52.2)	1.00 (25.4)	0.20 (5.2)	20000 (1379)
MF9	DFF2	SS-FFC-MF9-DFF2	1.85(46.9)	1.00 (25.4)	0.09 (2.4)	15000 (1034)
MF9	DFF4	SS-FFC-MF9-DFF4	2.04(51.8)	1.00 (25.4)	0.19 (4.8)	20000 (1379)
MF9	DFF6	SS-FFC-MF9-DFF6	2.07(52.6)	1.00 (25.4)	0.25 (6.4)	20000 (1379)
MF9	DFF8	SS-FFC-MF9-DFF8	2.24(57.0)	1.00 (25.4)	0.31 (7.9)	20000 (1379)
MF12	DFF6	SS-FFC-MF12-DFF6	2.39(60.6)	1.37 (34.9)	0.25 (6.4)	20000 (1379)
MF12	DFF8	SS-FFC-MF12-DFF8	2.43(61.8)	1.37 (34.9)	0.37 (9.5)	20000 (1379)
MF16	DFF8	SS-FFC-MF16-DFF8	2.99(76.0)	1.75 (44.5)	0.37 (9.5)	20000 (1379)

Female Medium Pressure to Female NPT

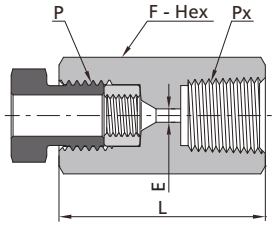

Female Medium Pressure						Female NPT
P-Connection	Px-Connection	Ordering Number	Dimensions, in. (mm)			Working Pressure psig (bar)
			L	F	E	
MF4	FNS2	SS-FFC-MF4-FNS2	1.37 (34.9)	0.63 (15.9)	0.11 (2.8)	15000 (1034)
MF4	FNS4	SS-FFC-MF4-FNS4	1.63 (41.3)	0.94 (23.8)	0.11 (2.8)	15000 (1034)
MF4	FNS6	SS-FFC-MF4-FNS6	1.63 (41.3)	1.13 (28.6)	0.11 (2.8)	15000 (1034)
MF4	FNS8	SS-FFC-MF4-FNS8	2.00 (50.8)	1.37 (34.9)	0.11 (2.8)	15000 (1034)
MF6	FNS2	SS-FFC-MF6-FNS2	1.50 (38.1)	0.75 (19.1)	0.20 (5.2)	15000 (1034)
MF6	FNS4	SS-FFC-MF6-FNS4	1.75 (44.5)	0.94 (23.8)	0.20 (5.2)	15000 (1034)
MF6	FNS6	SS-FFC-MF6-FNS6	1.81 (46.0)	1.13 (28.6)	0.20 (5.2)	15000 (1034)
MF6	FNS8	SS-FFC-MF6-FNS8	2.13 (54.0)	1.37 (34.9)	0.20 (5.2)	15000 (1034)
MF6	FNS12	SS-FFC-MF6-FNS12	2.25 (57.2)	1.50 (38.1)	0.20 (5.2)	10000 (690)
MF9	FNS2	SS-FFC-MF9-FNS2	1.63 (41.3)	1.00 (25.4)	0.31 (7.9)	15000 (1034)
MF9	FNS4	SS-FFC-MF9-FNS4	2.00 (50.8)	1.00 (25.4)	0.31 (7.9)	15000 (1034)
MF9	FNS6	SS-FFC-MF9-FNS6	2.00 (50.8)	1.13 (28.6)	0.31 (7.9)	15000 (1034)
MF9	FNS8	SS-FFC-MF9-FNS8	2.25 (57.2)	1.37 (34.9)	0.31 (7.9)	15000 (1034)
MF9	FNS12	SS-FFC-MF9-FNS12	2.25 (57.2)	1.50 (38.1)	0.31 (7.9)	10000 (690)
MF9	FNS16	SS-FFC-MF9-FNS16	2.63 (66.7)	1.75 (44.5)	0.31 (7.9)	10000 (690)
MF12	FNS2	SS-FFC-MF12-FNS2	1.75 (44.5)	1.37 (34.9)	0.32 (8.1)	15000 (1034)
MF12	FNS4	SS-FFC-MF12-FNS4	2.00 (50.8)	1.37 (34.9)	0.41 (10.4)	15000 (1034)
MF12	FNS6	SS-FFC-MF12-FNS6	2.37 (60.3)	1.37 (34.9)	0.44 (11.1)	15000 (1034)
MF12	FNS8	SS-FFC-MF12-FNS8	2.63 (66.7)	1.37 (34.9)	0.44 (11.1)	15000 (1034)
MF12	FNS12	SS-FFC-MF12-FNS12	2.63 (66.7)	1.50 (38.1)	0.44 (11.1)	10000 (690)
MF12	FNS16	SS-FFC-MF12-FNS16	2.63 (66.7)	1.75 (44.5)	0.44 (11.1)	10000 (690)
MF16	FNS4	SS-FFC-MF16-FNS4	2.37 (60.3)	1.75 (44.5)	0.41 (10.4)	15000 (1034)
MF16	FNS6	SS-FFC-MF16-FNS6	2.50 (63.5)	1.75 (44.5)	0.55 (13.9)	15000 (1034)
MF16	FNS8	SS-FFC-MF16-FNS8	3.00 (76.2)	1.75 (44.5)	0.56 (14.3)	15000 (1034)
MF16	FNS12	SS-FFC-MF16-FNS12	3.00 (76.2)	1.75 (44.5)	0.56 (14.3)	10000 (690)
MF16	FNS16	SS-FFC-MF16-FNS16	3.00 (76.2)	1.75 (44.5)	0.56 (14.3)	10000 (690)

Female to Male - FMA

Female High Pressure to Male High Pressure

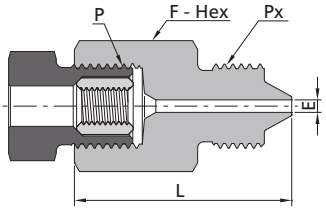

Female High Pressure						Male High Pressure
P-Connection	Px-Connection	Ordering Number	Dimensions, in. (mm)			Working Pressure psig (bar)
			L	F	E	
HF4	HM4	SS-FMA-HF4-HM4	1.44 (36.5)	0.75 (19.1)	0.08 (2.1)	60000 (4137)
HF4	HM6	SS-FMA-HF4-HM6	1.69 (42.9)	0.81 (20.6)	0.09 (2.4)	60000 (4137)
HF4	HM9	SS-FMA-HF4-HM9	1.75 (44.5)	1.19 (30.2)	0.09 (2.4)	60000 (4137)
HF6	HM4	SS-FMA-HF6-HM4	1.75 (44.5)	1.00 (25.4)	0.08 (2.1)	60000 (4137)
HF6	HM6	SS-FMA-HF6-HM6	2.00 (50.8)	1.00 (25.4)	0.13 (3.2)	60000 (4137)
HF6	HM9	SS-FMA-HF6-HM9	2.13 (54.0)	1.19 (30.2)	0.13 (3.2)	60000 (4137)
HF9	HM4	SS-FMA-HF9-HM4	2.06 (52.4)	1.37 (34.9)	0.08 (2.1)	60000 (4137)
HF9	HM6	SS-FMA-HF9-HM6	2.37 (60.3)	1.37 (34.9)	0.13 (3.2)	60000 (4137)
HF9	HM9	SS-FMA-HF9-HM9	2.50 (63.5)	1.37 (34.9)	0.19 (4.8)	60000 (4137)

Female High Pressure to T60H Series Coned and Threaded Nipples

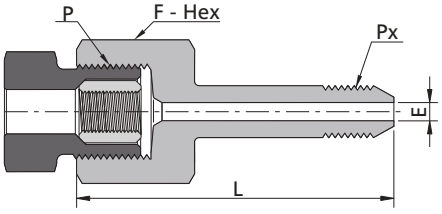

Female High Pressure						T60H Series Coned and Threaded Nipples
P-Connection	Px-Connection	Ordering Number	Dimensions, in. (mm)			Working Pressure psig (bar)
			L	F	E	
HF4	HCT4	SS-FMA-HF4-HCT4	1.93 (49.0)	0.75 (19.1)	0.08 (2.1)	60000 (4137)
HF4	HCT6	SS-FMA-HF4-HCT6	2.32 (59.0)	0.75 (19.1)	0.09 (2.4)	60000 (4137)
HF4	HCT9	SS-FMA-HF4-HCT9	2.91 (74.0)	0.75 (19.1)	0.09 (2.4)	60000 (4137)
HF6	HCT4	SS-FMA-HF6-HCT4	2.20 (56.0)	1.00 (25.4)	0.08 (2.1)	60000 (4137)
HF6	HCT6	SS-FMA-HF6-HCT6	2.60 (66.0)	1.00 (25.4)	0.13 (3.2)	60000 (4137)
HF6	HCT9	SS-FMA-HF6-HCT9	3.19 (81.0)	1.00 (25.4)	0.13 (3.2)	60000 (4137)
HF9	HCT4	SS-FMA-HF9-HCT4	2.48 (63.0)	1.38 (34.9)	0.08 (2.1)	60000 (4137)
HF9	HCT6	SS-FMA-HF9-HCT6	2.87 (73.0)	1.38 (34.9)	0.13 (3.2)	60000 (4137)
HF9	HCT9	SS-FMA-HF9-HCT9	3.46 (88.0)	1.38 (34.9)	0.19 (4.8)	60000 (4137)

Female High Pressure to Male Medium Pressure

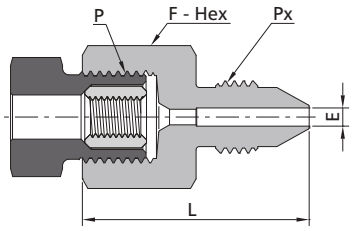

Female High Pressure						Male Medium Pressure
P-Connection	Px-Connection	Ordering Number	Dimensions, in. (mm)			Working Pressure psig (bar)
			L	F	E	
HF4	MM4	SS-FMA-HF4-MM4	1.37 (34.9)	0.75 (19.1)	0.09 (2.4)	20000 (1379)
HF4	MM6	SS-FMA-HF4-MM6	1.50 (38.1)	0.75 (19.1)	0.09 (2.4)	20000 (1379)
HF4	MM9	SS-FMA-HF4-MM9	1.69 (42.9)	0.94 (23.8)	0.09 (2.4)	20000 (1379)
HF4	MM12	SS-FMA-HF4-MM12	1.75 (44.5)	1.19 (30.2)	0.09 (2.4)	20000 (1379)
HF4	MM16	SS-FMA-HF4-MM16	2.37 (60.3)	1.50 (38.1)	0.09 (2.4)	20000 (1379)
HF6	MM4	SS-FMA-HF6-MM4	1.67 (42.3)	1.00 (25.4)	0.11 (2.8)	20000 (1379)
HF6	MM6	SS-FMA-HF6-MM6	1.81 (46.0)	1.00 (25.4)	0.13 (3.2)	20000 (1379)
HF6	MM9	SS-FMA-HF6-MM9	1.94 (49.2)	1.00 (25.4)	0.13 (3.2)	20000 (1379)
HF6	MM12	SS-FMA-HF6-MM12	2.13 (54.0)	1.19 (30.2)	0.13 (3.2)	20000 (1379)
HF6	MM16	SS-FMA-HF6-MM16	2.50 (63.5)	1.50 (38.1)	0.13 (3.2)	20000 (1379)
HF9	MM4	SS-FMA-HF9-MM4	1.87 (47.6)	1.37 (34.9)	0.11 (2.8)	20000 (1379)
HF9	MM6	SS-FMA-HF9-MM6	2.00 (50.8)	1.37 (34.9)	0.19 (4.8)	20000 (1379)
HF9	MM9	SS-FMA-HF9-MM9	2.19 (55.6)	1.37 (34.9)	0.19 (4.8)	20000 (1379)
HF9	MM12	SS-FMA-HF9-MM12	2.37 (60.3)	1.37 (34.9)	0.19 (4.8)	20000 (1379)
HF9	MM16	SS-FMA-HF9-MM16	2.81 (71.4)	1.50 (38.1)	0.19 (4.8)	20000 (1379)

Female High Pressure to Male 20D Series

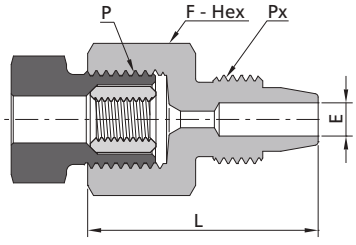

Female High Pressure						Male 20D Series
P-Connection	Px-Connection	Ordering Number	Dimensions, in. (mm)			Working Pressure psig (bar)
			L	F	E	
HF4	DFM2	SS-FMA-HF4-DFM2	1.31 (33.2)	0.75 (19.1)	0.09 (2.4)	15000 (1034)
HF4	DFM4	SS-FMA-HF4-DFM4	1.43 (36.3)	0.75 (19.1)	0.09 (2.4)	20000 (1379)
HF4	DFM6	SS-FMA-HF4-DFM6	1.46 (37.0)	0.75 (19.1)	0.09 (2.4)	20000 (1379)
HF4	DFM8	SS-FMA-HF4-DFM8	1.54 (39.0)	0.94 (23.8)	0.09 (2.4)	20000 (1379)
HF6	DFM2	SS-FMA-HF6-DFM2	1.56 (39.5)	1.00 (25.4)	0.09 (2.4)	15000 (1034)
HF6	DFM4	SS-FMA-HF6-DFM4	1.68 (42.7)	1.00 (25.4)	0.13 (3.2)	20000 (1379)
HF6	DFM6	SS-FMA-HF6-DFM6	1.71 (43.4)	1.00 (25.4)	0.13 (3.2)	20000 (1379)
HF6	DFM8	SS-FMA-HF6-DFM8	1.85 (47.0)	1.00 (25.4)	0.13 (3.2)	20000 (1379)
HF9	DFM2	SS-FMA-HF9-DFM2	1.87 (47.5)	1.37 (34.9)	0.09 (2.4)	15000 (1034)
HF9	DFM4	SS-FMA-HF9-DFM4	1.87 (47.5)	1.37 (34.9)	0.19 (4.8)	20000 (1379)
HF9	DFM6	SS-FMA-HF9-DFM6	1.89 (48.1)	1.37 (34.9)	0.19 (4.8)	20000 (1379)
HF9	DFM8	SS-FMA-HF9-DFM8	2.04 (51.7)	1.37 (34.9)	0.19 (4.8)	20000 (1379)

FITOK

Female High Pressure to Male NPT

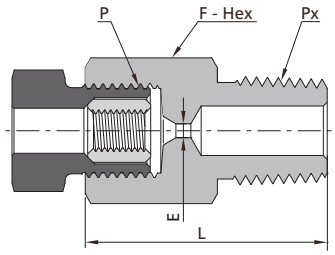

Female High Pressure						Male NPT
P-Connection	Px-Connection	Ordering Number	Dimensions, in. (mm)			Working Pressure psig (bar)
			L	F	E	
HF4	NS2	SS-FMA-HF4-NS2	1.25 (31.8)	0.75 (19.1)	0.09 (2.4)	15000 (1034)
HF4	NS4	SS-FMA-HF4-NS4	1.37 (34.9)	0.75 (19.1)	0.09 (2.4)	15000 (1034)
HF4	NS6	SS-FMA-HF4-NS6	1.37 (34.9)	0.75 (19.1)	0.09 (2.4)	15000 (1034)
HF4	NS8	SS-FMA-HF4-NS8	1.50 (38.1)	0.87 (22.2)	0.09 (2.4)	15000 (1034)
HF4	NS12	SS-FMA-HF4-NS12	1.75 (44.5)	1.06 (27.0)	0.09 (2.4)	10000 (690)
HF6	NS2	SS-FMA-HF6-NS2	1.50 (38.1)	1.00 (25.4)	0.13 (3.2)	15000 (1034)
HF6	NS4	SS-FMA-HF6-NS4	1.63 (41.3)	1.00 (25.4)	0.13 (3.2)	15000 (1034)
HF6	NS6	SS-FMA-HF6-NS6	1.63 (41.3)	1.00 (25.4)	0.13 (3.2)	15000 (1034)
HF6	NS8	SS-FMA-HF6-NS8	1.75 (44.5)	1.00 (25.4)	0.13 (3.2)	15000 (1034)
HF6	NS12	SS-FMA-HF6-NS12	2.00 (50.8)	1.06 (27.0)	0.13 (3.2)	10000 (690)
HF6	NS16	SS-FMA-HF6-NS16	2.00 (50.8)	1.37 (34.9)	0.13 (3.2)	10000 (690)
HF9	NS2	SS-FMA-HF9-NS2	1.63 (41.3)	1.37 (34.9)	0.19 (4.8)	15000 (1034)
HF9	NS4	SS-FMA-HF9-NS4	1.75 (44.5)	1.37 (34.9)	0.19 (4.8)	15000 (1034)
HF9	NS6	SS-FMA-HF9-NS6	1.75 (44.5)	1.37 (34.9)	0.19 (4.8)	15000 (1034)
HF9	NS8	SS-FMA-HF9-NS8	1.87 (47.6)	1.37 (34.9)	0.19 (4.8)	15000 (1034)
HF9	NS12	SS-FMA-HF9-NS12	2.13 (54.0)	1.37 (34.9)	0.19 (4.8)	10000 (690)
HF9	NS16	SS-FMA-HF9-NS16	2.25 (57.2)	1.37 (34.9)	0.19 (4.8)	10000 (690)

Female High Pressure to Male Type "M"

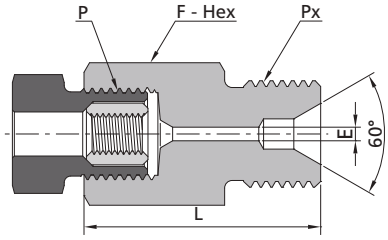

Female High Pressure						Male Type "M"
P-Connection	Px-Connection	Ordering Number	Dimensions, in. (mm)			Working Pressure psig (bar)
			L	F	E	
HF4	TM9	SS-FMA-HF4-TM9	1.25 (31.8)	0.75 (19.1)	0.09 (2.4)	60000 (4137)
HF4	TM12	SS-FMA-HF4-TM12	1.38 (35.0)	0.75 (19.1)	0.09 (2.4)	30000 (2068)
HF4	TM14	SS-FMA-HF4-TM14	1.56 (39.7)	1.00 (25.4)	0.09 (2.4)	50000 (3447)
HF4	TM16	SS-FMA-HF4-TM16	1.37 (34.9)	1.00 (25.4)	0.09 (2.4)	30000 (2068)
HF6	TM9	SS-FMA-HF6-TM9	1.50 (38.1)	1.00 (25.4)	0.09 (2.4)	60000 (4137)
HF6	TM12	SS-FMA-HF6-TM12	1.63 (41.3)	1.00 (25.4)	0.13 (3.2)	30000 (2068)
HF6	TM14	SS-FMA-HF6-TM14	1.81 (46.0)	1.00 (25.4)	0.13 (3.2)	50000 (3447)
HF6	TM16	SS-FMA-HF6-TM16	1.64 (41.6)	1.00 (25.4)	0.13 (3.2)	30000 (2068)
HF6	TM21	SS-FMA-HF6-TM21	1.56 (39.7)	1.37 (34.9)	0.13 (3.2)	20000 (1379)
HF9	TM14	SS-FMA-HF9-TM14	2.00 (50.8)	1.37 (34.9)	0.15 (3.8)	50000 (3447)
HF9	TM16	SS-FMA-HF9-TM16	1.81 (46.0)	1.37 (34.9)	0.19 (4.8)	30000 (2068)
HF9	TM21	SS-FMA-HF9-TM21	1.81 (46.0)	1.37 (34.9)	0.19 (4.8)	20000 (1379)

Female Medium Pressure to Male High Pressure

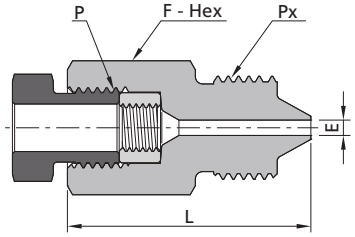

Female Medium Pressure						Male High Pressure
P-Connection	Px-Connection	Ordering Number	Dimensions, in. (mm)			Working Pressure psig (bar)
			L	F	E	
MF4	HM4	SS-FMA-MF4-HM4	1.31 (33.3)	0.63 (15.9)	0.08 (2.1)	20000 (1379)
MF4	HM6	SS-FMA-MF4-HM6	1.50 (38.1)	0.81 (20.6)	0.11 (2.8)	20000 (1379)
MF4	HM9	SS-FMA-MF4-HM9	1.63 (41.3)	1.19 (30.2)	0.11 (2.8)	20000 (1379)
MF6	HM4	SS-FMA-MF6-HM4	1.50 (38.1)	0.75 (19.1)	0.08 (2.1)	20000 (1379)
MF6	HM6	SS-FMA-MF6-HM6	1.69 (42.9)	0.81 (20.6)	0.13 (3.2)	20000 (1379)
MF6	HM9	SS-FMA-MF6-HM9	1.75 (44.5)	1.19 (30.2)	0.19 (4.8)	20000 (1379)
MF9	HM4	SS-FMA-MF9-HM4	1.81 (46.0)	1.00 (25.4)	0.08 (2.1)	20000 (1379)
MF9	HM6	SS-FMA-MF9-HM6	2.13 (54.0)	1.00 (25.4)	0.13 (3.2)	20000 (1379)
MF9	HM9	SS-FMA-MF9-HM9	2.13 (54.0)	1.19 (30.2)	0.19 (4.8)	20000 (1379)
MF12	HM4	SS-FMA-MF12-HM4	2.25 (57.2)	1.37 (34.9)	0.08 (2.1)	20000 (1379)
MF12	HM6	SS-FMA-MF12-HM6	2.50 (63.5)	1.37 (34.9)	0.13 (3.2)	20000 (1379)
MF12	HM9	SS-FMA-MF12-HM9	2.50 (63.5)	1.37 (34.9)	0.19 (4.8)	20000 (1379)
MF16	HM4	SS-FMA-MF16-HM4	2.94 (74.6)	1.75 (44.5)	0.08 (2.1)	20000 (1379)
MF16	HM6	SS-FMA-MF16-HM6	3.13 (79.4)	1.75 (44.5)	0.13 (3.2)	20000 (1379)
MF16	HM9	SS-FMA-MF16-HM9	3.19 (81.0)	1.75 (44.5)	0.19 (4.8)	20000 (1379)

Female Medium Pressure to Male Medium Pressure

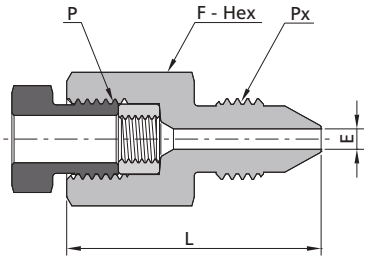

Female Medium Pressure						Male Medium Pressure
P-Connection	Px-Connection	Ordering Number	Dimensions, in. (mm)			Working Pressure psig (bar)
			L	F	E	
MF4	MM4	SS-FMA-MF4-MM4	1.37 (34.9)	0.63 (15.9)	0.11 (2.8)	20000 (1379)
MF4	MM6	SS-FMA-MF4-MM6	1.50 (38.1)	0.63 (15.9)	0.11 (2.8)	20000 (1379)
MF4	MM9	SS-FMA-MF4-MM9	1.63 (41.3)	0.94 (23.8)	0.11 (2.8)	20000 (1379)
MF4	MM12	SS-FMA-MF4-MM12	1.75 (44.5)	1.19 (30.2)	0.11 (2.8)	20000 (1379)
MF4	MM16	SS-FMA-MF4-MM16	2.37 (60.3)	1.50 (38.1)	0.11 (2.8)	20000 (1379)
MF6	MM4	SS-FMA-MF6-MM4	1.69 (42.9)	0.75 (19.1)	0.11 (2.8)	20000 (1379)
MF6	MM6	SS-FMA-MF6-MM6	1.69 (42.9)	0.75 (19.1)	0.20 (5.2)	20000 (1379)
MF6	MM9	SS-FMA-MF6-MM9	1.87 (47.6)	0.94 (23.8)	0.20 (5.2)	20000 (1379)
MF6	MM12	SS-FMA-MF6-MM12	1.94 (49.2)	1.19 (30.2)	0.20 (5.2)	20000 (1379)
MF6	MM16	SS-FMA-MF6-MM16	2.37 (60.3)	1.50 (38.1)	0.20 (5.2)	20000 (1379)
MF9	MM4	SS-FMA-MF9-MM4	1.94 (49.2)	1.00 (25.4)	0.11 (2.8)	20000 (1379)
MF9	MM6	SS-FMA-MF9-MM6	2.06 (52.4)	1.00 (25.4)	0.20 (5.2)	20000 (1379)
MF9	MM9	SS-FMA-MF9-MM9	2.13 (54.0)	1.00 (25.4)	0.31 (7.9)	20000 (1379)
MF9	MM12	SS-FMA-MF9-MM12	2.25 (57.2)	1.19 (30.2)	0.31 (7.9)	20000 (1379)
MF9	MM16	SS-FMA-MF9-MM16	2.50 (63.5)	1.50 (38.1)	0.31 (7.9)	20000 (1379)
MF12	MM4	SS-FMA-MF12-MM4	2.19 (55.6)	1.37 (34.9)	0.11 (2.8)	20000 (1379)
MF12	MM6	SS-FMA-MF12-MM6	2.31 (58.7)	1.37 (34.9)	0.20 (5.2)	20000 (1379)
MF12	MM9	SS-FMA-MF12-MM9	2.44 (61.9)	1.37 (34.9)	0.31 (7.9)	20000 (1379)
MF12	MM12	SS-FMA-MF12-MM12	2.56 (65.1)	1.37 (34.9)	0.44 (11.1)	20000 (1379)
MF12	MM16	SS-FMA-MF12-MM16	2.94 (74.6)	1.50 (38.1)	0.44 (11.1)	20000 (1379)
MF16	MM9	SS-FMA-MF16-MM9	3.06 (77.8)	1.75 (44.5)	0.31 (7.9)	20000 (1379)
MF16	MM12	SS-FMA-MF16-MM12	3.19 (81.0)	1.75 (44.5)	0.44 (11.1)	20000 (1379)
MF16	MM16	SS-FMA-MF16-MM16	3.50 (88.9)	1.75 (44.5)	0.56 (14.3)	20000 (1379)

Female Medium Pressure to Medium Pressure Coned and Threaded Nipples

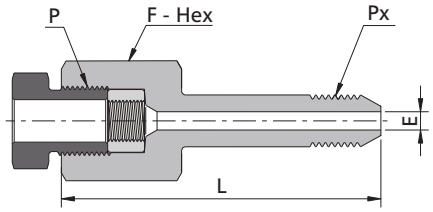

Female Medium Pressure			Medium Pressure Coned and Threaded Nipples			
P- Connection	Px- Connection	Ordering Number	Dimensions, in. (mm)			Working Pressure psig (bar)
			L	F	E	
MF4	MCT4	SS-FMA-MF4-MCT4	1.63 (41.4)	0.63 (15.9)	0.11 (2.8)	20000 (1379)
MF4	MCT6	SS-FMA-MF4-MCT6	1.88 (47.8)	0.63 (15.9)	0.11 (2.8)	20000 (1379)
MF4	MCT9	SS-FMA-MF4-MCT9	2.09 (53.1)	0.63 (17.5)	0.11 (2.8)	20000 (1379)
MF6	MCT4	SS-FMA-MF6-MCT4	1.89 (48.0)	0.75 (19.1)	0.11 (2.8)	20000 (1379)
MF6	MCT6	SS-FMA-MF6-MCT6	2.14 (54.4)	0.75 (19.1)	0.20 (5.2)	20000 (1379)
MF6	MCT9	SS-FMA-MF6-MCT9	2.35 (59.7)	0.75 (19.1)	0.20 (5.2)	20000 (1379)
MF9	MCT4	SS-FMA-MF9-MCT4	2.20 (56.0)	1.00 (25.4)	0.11 (2.8)	20000 (1379)
MF9	MCT6	SS-FMA-MF9-MCT6	2.46 (62.4)	1.00 (25.4)	0.20 (5.2)	20000 (1379)
MF9	MCT9	SS-FMA-MF9-MCT9	2.67 (67.7)	1.00 (25.4)	0.31 (7.9)	20000 (1379)
MF9	MCT12	SS-FMA-MF9-MCT12	2.91 (74.0)	1.00 (25.4)	0.31 (7.9)	20000 (1379)
MF9	MCT16	SS-FMA-MF9-MCT16	3.45 (87.6)	1.13 (28.6)	0.31 (7.9)	20000 (1379)
MF12	MCT9	SS-FMA-MF12-MCT9	2.94 (74.7)	1.38 (34.9)	0.31 (7.9)	20000 (1379)
MF12	MCT12	SS-FMA-MF12-MCT12	3.19 (81.0)	1.38 (34.9)	0.44 (11.1)	20000 (1379)
MF12	MCT16	SS-FMA-MF12-MCT16	3.72 (94.6)	1.38 (34.9)	0.44 (11.1)	20000 (1379)
MF16	MCT9	SS-FMA-MF16-MCT9	3.49 (88.7)	1.75 (44.5)	0.31 (7.9)	20000 (1379)
MF16	MCT12	SS-FMA-MF16-MCT12	3.74 (95.0)	1.75 (44.5)	0.44 (11.1)	20000 (1379)
MF16	MCT16	SS-FMA-MF16-MCT16	4.28 (108.6)	1.75 (44.5)	0.56 (14.3)	20000 (1379)

Female Medium Pressure to Male 20D Series

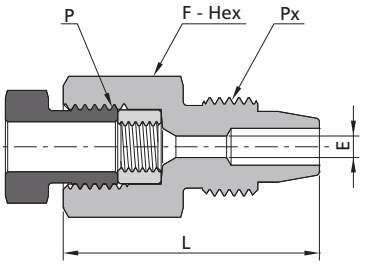

Female Medium Pressure						Male 20D Series
P-Connection	Px-Connection	Ordering Number	Dimensions, in. (mm)			Working Pressure psig (bar)
			L	F	E	
MF4	DFM2	SS-FMA-MF4-DFM2	1.31 (33.2)	0.63 (15.9)	0.09 (2.4)	15000 (1034)
MF4	DFM4	SS-FMA-MF4-DFM4	1.43 (36.3)	0.63 (15.9)	0.11 (2.8)	20000 (1379)
MF4	DFM6	SS-FMA-MF4-DFM6	1.46 (37.0)	0.75 (19.1)	0.11 (2.8)	20000 (1379)
MF4	DFM8	SS-FMA-MF4-DFM8	1.47 (37.4)	0.94 (23.8)	0.11 (2.8)	20000 (1379)
MF6	DFM2	SS-FMA-MF6-DFM2	1.62 (41.1)	0.75 (19.1)	0.09 (2.4)	15000 (1034)
MF6	DFM4	SS-FMA-MF6-DFM4	1.62 (41.1)	0.75 (19.1)	0.19 (4.8)	20000 (1379)
MF6	DFM6	SS-FMA-MF6-DFM6	1.65 (41.8)	0.75 (19.1)	0.20 (5.2)	20000 (1379)
MF6	DFM8	SS-FMA-MF6-DFM8	1.72 (43.8)	0.94 (23.8)	0.20 (5.2)	20000 (1379)
MF9	DFM2	SS-FMA-MF9-DFM2	1.87 (47.5)	1.00 (25.4)	0.09 (2.4)	15000 (1034)
MF9	DFM4	SS-FMA-MF9-DFM4	1.99 (50.6)	1.00 (25.4)	0.19 (4.8)	20000 (1379)
MF9	DFM6	SS-FMA-MF9-DFM6	2.02 (51.3)	1.00 (25.4)	0.25 (6.4)	20000 (1379)
MF9	DFM8	SS-FMA-MF9-DFM8	2.04 (51.7)	1.00 (25.4)	0.31 (7.9)	20000 (1379)
MF12	DFM2	SS-FMA-MF12-DFM2	2.18 (55.4)	1.37 (34.9)	0.09 (2.4)	15000 (1034)
MF12	DFM4	SS-FMA-MF12-DFM4	2.31 (58.6)	1.37 (34.9)	0.19 (4.8)	20000 (1379)
MF12	DFM6	SS-FMA-MF12-DFM6	2.27 (57.7)	1.37 (34.9)	0.25 (6.4)	20000 (1379)
MF12	DFM8	SS-FMA-MF12-DFM8	2.41 (61.3)	1.37 (34.9)	0.37 (7.9)	20000 (1379)
MF16	DFM2	SS-FMA-MF16-DFM2	2.74 (69.7)	1.75 (44.5)	0.09 (2.4)	15000 (1034)
MF16	DFM4	SS-FMA-MF16-DFM4	2.87 (72.9)	1.75 (44.5)	0.19 (4.8)	20000 (1379)
MF16	DFM6	SS-FMA-MF16-DFM6	2.89 (73.5)	1.75 (44.5)	0.25 (6.4)	20000 (1379)
MF16	DFM8	SS-FMA-MF16-DFM8	2.97 (75.5)	1.75 (44.5)	0.37 (9.5)	20000 (1379)

Female Medium Pressure to Male NPT

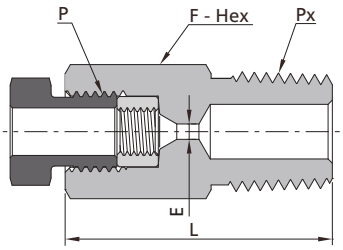

Female Medium Pressure						Male NPT
P-Connection	Px-Connection	Ordering Number	Dimensions, in. (mm)			Working Pressure psig (bar)
			L	F	E	
MF4	NS2	SS-FMA-MF4-NS2	1.19 (30.2)	0.63 (15.9)	0.11 (2.8)	15000 (1034)
MF4	NS4	SS-FMA-MF4-NS4	1.37 (34.9)	0.63 (15.9)	0.11 (2.8)	15000 (1034)
MF4	NS6	SS-FMA-MF4-NS6	1.37 (34.9)	0.69 (17.5)	0.11 (2.8)	15000 (1034)
MF4	NS8	SS-FMA-MF4-NS8	1.37 (34.9)	0.87 (22.2)	0.11 (2.8)	15000 (1034)
MF4	NS12	SS-FMA-MF4-NS12	1.75 (44.5)	1.06 (27.0)	0.11 (2.8)	10000 (690)
MF6	NS2	SS-FMA-MF6-NS2	1.37 (34.9)	0.75 (19.1)	0.19 (4.8)	15000 (1034)
MF6	NS4	SS-FMA-MF6-NS4	1.50 (38.1)	0.75 (19.1)	0.20 (5.2)	15000 (1034)
MF6	NS6	SS-FMA-MF6-NS6	1.50 (38.1)	0.75 (19.1)	0.20 (5.2)	15000 (1034)
MF6	NS8	SS-FMA-MF6-NS8	1.63 (41.3)	0.87 (22.2)	0.20 (5.2)	15000 (1034)
MF6	NS12	SS-FMA-MF6-NS12	1.75 (44.5)	1.06 (27.0)	0.20 (5.2)	10000 (690)
MF6	NS16	SS-FMA-MF6-NS16	2.00 (50.8)	1.37 (34.9)	0.20 (5.2)	10000 (690)
MF9	NS2	SS-FMA-MF9-NS2	1.75 (44.5)	1.00 (25.4)	0.19 (4.8)	15000 (1034)
MF9	NS4	SS-FMA-MF9-NS4	1.75 (44.5)	1.00 (25.4)	0.25 (6.4)	15000 (1034)
MF9	NS6	SS-FMA-MF9-NS6	1.75 (44.5)	1.00 (25.4)	0.31 (7.9)	15000 (1034)
MF9	NS8	SS-FMA-MF9-NS8	1.94 (49.2)	1.00 (25.4)	0.31 (7.9)	15000 (1034)
MF9	NS12	SS-FMA-MF9-NS12	2.00 (50.8)	1.06 (27.0)	0.31 (7.9)	10000 (690)
MF9	NS16	SS-FMA-MF9-NS16	2.25 (57.2)	1.37 (34.9)	0.31 (7.9)	10000 (690)
MF12	NS4	SS-FMA-MF12-NS4	2.00 (50.8)	1.37 (34.9)	0.25 (6.4)	15000 (1034)
MF12	NS6	SS-FMA-MF12-NS6	2.00 (50.8)	1.37 (34.9)	0.31 (7.9)	15000 (1034)
MF12	NS8	SS-FMA-MF12-NS8	2.19 (55.6)	1.37 (34.9)	0.38 (9.6)	15000 (1034)
MF12	NS12	SS-FMA-MF12-NS12	2.25 (57.2)	1.37 (34.9)	0.44 (11.1)	10000 (690)
MF12	NS16	SS-FMA-MF12-NS16	2.63 (66.7)	1.37 (34.9)	0.44 (11.1)	10000 (690)
MF16	NS4	SS-FMA-MF16-NS4	2.87 (73.0)	1.75 (44.5)	0.25 (6.4)	15000 (1034)
MF16	NS6	SS-FMA-MF16-NS6	2.87 (73.0)	1.75 (44.5)	0.31 (7.9)	15000 (1034)
MF16	NS8	SS-FMA-MF16-NS8	2.87 (73.0)	1.75 (44.5)	0.38 (9.6)	15000 (1034)
MF16	NS12	SS-FMA-MF16-NS12	2.87 (73.0)	1.75 (44.5)	0.56 (14.3)	10000 (690)
MF16	NS16	SS-FMA-MF16-NS16	3.06 (77.8)	1.75 (44.5)	0.56 (14.3)	10000 (690)

Female Medium Pressure to Male Type "M"

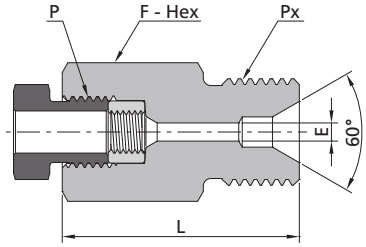

Female Medium Pressure						Male Type "M"
P-Connection	Px-Connection	Ordering Number	Dimensions, in. (mm)			Working Pressure psig (bar)
			L	F	E	
MF4	TM9	SS-FMA-MF4-TM9	1.19 (30.2)	0.63 (15.9)	0.09 (2.4)	20000 (1379)
MF4	TM12	SS-FMA-MF4-TM12	1.31 (33.3)	0.75 (19.1)	0.11 (2.8)	20000 (1379)
MF4	TM14	SS-FMA-MF4-TM14	1.50 (38.1)	1.00 (25.4)	0.11 (2.8)	20000 (1379)
MF6	TM9	SS-FMA-MF6-TM9	1.37 (34.9)	0.75 (19.1)	0.09 (2.4)	20000 (1379)
MF6	TM12	SS-FMA-MF6-TM12	1.50 (38.1)	0.75 (19.1)	0.09 (2.4)	20000 (1379)
MF6	TM14	SS-FMA-MF6-TM14	1.63 (41.3)	1.00 (25.4)	0.15 (3.8)	20000 (1379)
MF6	TM16	SS-FMA-MF6-TM16	1.63 (41.3)	1.00 (25.4)	0.20 (5.2)	20000 (1379)
MF9	TM9	SS-FMA-MF9-TM9	1.69 (42.9)	1.00 (25.4)	0.09 (2.4)	20000 (1379)
MF9	TM12	SS-FMA-MF9-TM12	1.81 (46.0)	1.00 (25.4)	0.29 (7.4)	20000 (1379)
MF9	TM14	SS-FMA-MF9-TM14	1.94 (49.2)	1.00 (25.4)	0.15 (3.8)	20000 (1379)
MF9	TM16	SS-FMA-MF9-TM16	1.81 (46.0)	1.00 (25.4)	0.31 (7.9)	20000 (1379)
MF9	TM21	SS-FMA-MF9-TM21	1.81 (46.0)	1.37 (34.9)	0.31 (7.9)	20000 (1379)
MF12	TM14	SS-FMA-MF12-TM14	2.19 (55.6)	1.37 (34.9)	0.15 (3.8)	20000 (1379)
MF12	TM16	SS-FMA-MF12-TM16	2.13 (54.0)	1.37 (34.9)	0.39 (10.0)	20000 (1379)
MF12	TM21	SS-FMA-MF12-TM21	2.00 (50.8)	1.37 (34.9)	0.44 (11.1)	20000 (1379)
MF16	TM21	SS-FMA-MF16-TM21	2.56 (65.1)	1.75 (44.5)	0.56 (14.3)	20000 (1379)

Female 20D Series to Male High Pressure

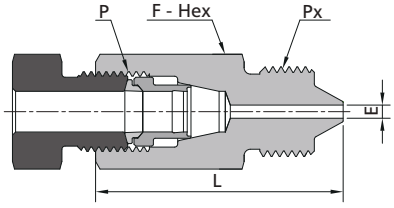

Female 20D Series						Male High Pressure
P-Connection	Px-Connection	Ordering Number	Dimensions, in. (mm)			Working Pressure psig (bar)
			L	F	E	
DFF2	HM4	SS-FMA-DFF2-HM4	1.22(31.0)	0.63 (15.9)	0.08 (2.1)	15000 (1034)
DFF2	HM6	SS-FMA-DFF2-HM6	1.47(37.3)	0.81 (20.6)	0.09 (2.4)	15000 (1034)
DFF2	HM9	SS-FMA-DFF2-HM9	1.78(45.3)	1.19 (30.2)	0.09 (2.4)	15000 (1034)
DFF4	HM4	SS-FMA-DFF4-HM4	1.54(39.1)	0.63 (15.9)	0.08 (2.1)	20000 (1379)
DFF4	HM6	SS-FMA-DFF4-HM6	1.73(43.9)	0.81 (20.6)	0.13 (3.2)	20000 (1379)
DFF4	HM9	SS-FMA-DFF4-HM9	1.79(45.5)	1.19 (30.2)	0.19 (4.8)	20000 (1379)
DFF6	HM4	SS-FMA-DFF6-HM4	1.70(43.1)	0.75 (19.1)	0.08 (2.1)	20000 (1379)
DFF6	HM6	SS-FMA-DFF6-HM6	1.89(47.9)	0.81 (20.6)	0.13 (3.2)	20000 (1379)
DFF6	HM9	SS-FMA-DFF6-HM9	1.76(44.7)	1.19 (30.2)	0.19 (4.8)	20000 (1379)
DFF8	HM4	SS-FMA-DFF8-HM4	1.87(47.5)	1.00 (25.4)	0.08 (2.1)	20000 (1379)
DFF8	HM6	SS-FMA-DFF8-HM6	2.06(52.2)	1.00 (25.4)	0.13 (3.2)	20000 (1379)
DFF8	HM9	SS-FMA-DFF8-HM9	2.06(52.2)	1.19 (30.2)	0.19 (4.8)	20000 (1379)

Female 20D Series to Male Medium Pressure

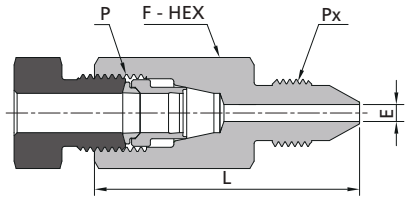

Female 20D Series						Male Medium Pressure
P-Connection	Px-Connection	Ordering Number	Dimensions, in. (mm)			Working Pressure psig (bar)
			L	F	E	
DFF2	MM4	SS-FMA-DFF2-MM4	1.35(34.2)	0.50 (12.7)	0.09 (2.4)	15000 (1034)
DFF2	MM6	SS-FMA-DFF2-MM6	1.41(35.8)	0.63 (15.9)	0.09 (2.4)	15000 (1034)
DFF2	MM9	SS-FMA-DFF2-MM9	1.66(42.1)	0.94 (23.8)	0.09 (2.4)	15000 (1034)
DFF2	MM12	SS-FMA-DFF2-MM12	1.91(48.5)	1.19 (30.2)	0.09 (2.4)	15000 (1034)
DFF2	MM16	SS-FMA-DFF2-MM16	2.53(64.3)	1.50 (38.1)	0.09 (2.4)	15000 (1034)
DFF4	MM4	SS-FMA-DFF4-MM4	1.67(42.3)	0.63 (15.9)	0.11 (2.8)	20000 (1379)
DFF4	MM6	SS-FMA-DFF4-MM6	1.79(45.5)	0.63 (15.9)	0.19 (4.8)	20000 (1379)
DFF4	MM9	SS-FMA-DFF4-MM9	1.73(43.9)	0.94 (23.8)	0.19 (4.8)	20000 (1379)
DFF4	MM12	SS-FMA-DFF4-MM12	1.92(48.7)	1.19 (30.2)	0.19 (4.8)	20000 (1379)
DFF4	MM16	SS-FMA-DFF4-MM16	2.54(64.5)	1.50 (38.1)	0.19 (4.8)	20000 (1379)
DFF6	MM4	SS-FMA-DFF6-MM4	1.82(46.3)	0.75 (19.1)	0.11 (2.8)	20000 (1379)
DFF6	MM6	SS-FMA-DFF6-MM6	1.89(47.9)	0.75 (19.1)	0.20 (5.2)	20000 (1379)
DFF6	MM9	SS-FMA-DFF6-MM9	1.94(49.4)	0.94 (23.8)	0.25 (6.4)	20000 (1379)
DFF6	MM12	SS-FMA-DFF6-MM12	2.01(51.0)	1.19 (30.2)	0.25 (6.4)	20000 (1379)
DFF6	MM16	SS-FMA-DFF6-MM16	2.51(63.7)	1.50 (38.1)	0.25 (6.4)	20000 (1379)
DFF8	MM4	SS-FMA-DFF8-MM4	1.93(49.1)	1.00 (25.4)	0.11 (2.8)	20000 (1379)
DFF8	MM6	SS-FMA-DFF8-MM6	2.12(53.8)	1.00 (25.4)	0.20 (5.2)	20000 (1379)
DFF8	MM9	SS-FMA-DFF8-MM9	2.24(57.0)	1.00 (25.4)	0.31 (7.9)	20000 (1379)
DFF8	MM12	SS-FMA-DFF8-MM12	2.24(57.0)	1.19 (30.2)	0.37 (9.5)	20000 (1379)
DFF8	MM16	SS-FMA-DFF8-MM16	2.68(68.1)	1.50 (38.1)	0.37 (9.5)	20000 (1379)

Female 20D Series to Male 20D Series

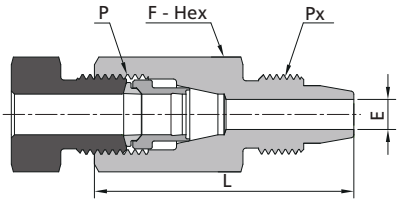

Female 20D Series						Male 20D Series
P-Connection	Px-Connection	Ordering Number	Dimensions, in. (mm)			Working Pressure psig (bar)
			L	F	E	
DFF2	DFM2	SS-FMA-DFF2-DFM2	1.34(34.0)	0.50 (12.7)	0.09 (2.4)	15000 (1034)
DFF2	DFM4	SS-FMA-DFF2-DFM4	1.40(35.6)	0.63 (15.9)	0.09 (2.4)	15000 (1034)
DFF2	DFM6	SS-FMA-DFF2-DFM6	1.37(34.7)	0.75 (19.1)	0.09 (2.4)	15000 (1034)
DFF2	DFM8	SS-FMA-DFF2-DFM8	1.63(41.4)	0.94 (23.8)	0.09 (2.4)	15000 (1034)
DFF4	DFM2	SS-FMA-DFF4-DFM2	1.72(43.7)	0.63 (15.9)	0.09 (2.4)	15000 (1034)
DFF4	DFM4	SS-FMA-DFF4-DFM4	1.78(45.3)	0.63 (15.9)	0.19 (4.8)	20000 (1379)
DFF4	DFM6	SS-FMA-DFF4-DFM6	1.75(44.4)	0.75 (19.1)	0.19 (4.8)	20000 (1379)
DFF4	DFM8	SS-FMA-DFF4-DFM8	1.83(46.4)	0.94 (23.8)	0.19 (4.8)	20000 (1379)
DFF6	DFM2	SS-FMA-DFF6-DFM2	1.81(46.1)	0.75 (19.1)	0.09 (2.4)	15000 (1034)
DFF6	DFM4	SS-FMA-DFF6-DFM4	1.94(49.3)	0.75 (19.1)	0.19 (4.8)	20000 (1379)
DFF6	DFM6	SS-FMA-DFF6-DFM6	1.91(48.4)	0.75 (19.1)	0.25 (6.4)	20000 (1379)
DFF6	DFM8	SS-FMA-DFF6-DFM8	1.92(48.8)	0.94 (23.8)	0.25 (6.4)	20000 (1379)
DFF8	DFM2	SS-FMA-DFF8-DFM2	1.93(48.9)	1.00 (25.4)	0.09 (2.4)	15000 (1034)
DFF8	DFM4	SS-FMA-DFF8-DFM4	2.05(52.1)	1.00 (25.4)	0.19 (4.8)	20000 (1379)
DFF8	DFM6	SS-FMA-DFF8-DFM6	2.07(52.7)	1.00 (25.4)	0.25 (6.4)	20000 (1379)
DFF8	DFM8	SS-FMA-DFF8-DFM8	2.15(54.7)	1.00 (25.4)	0.37 (9.5)	20000 (1379)

Female NPT to Male High Pressure

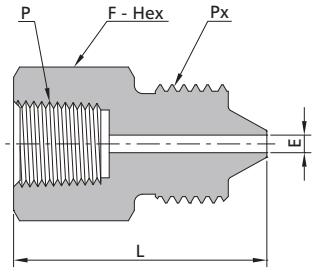

Female NPT						Male High Pressure
P-Connection	Px-Connection	Ordering Number	Dimensions, in. (mm)			Working Pressure psig (bar)
			L	F	E	
FNS2	HM4	SS-FMA-FNS2-HM4	1.19 (30.2)	0.63 (15.9)	0.08 (2.1)	15000 (1034)
FNS2	HM6	SS-FMA-FNS2-HM6	1.37 (34.9)	0.81 (20.6)	0.13 (3.2)	15000 (1034)
FNS2	HM9	SS-FMA-FNS2-HM9	1.63 (41.3)	1.19 (30.2)	0.19 (4.8)	15000 (1034)
FNS4	HM4	SS-FMA-FNS4-HM4	1.37 (34.9)	0.94 (23.8)	0.08 (2.1)	15000 (1034)
FNS4	HM6	SS-FMA-FNS4-HM6	1.63 (41.3)	0.94 (23.8)	0.13 (3.2)	15000 (1034)
FNS4	HM9	SS-FMA-FNS4-HM9	1.75 (44.5)	1.19 (30.2)	0.19 (4.8)	15000 (1034)
FNS6	HM4	SS-FMA-FNS6-HM4	1.44 (36.5)	1.13 (28.6)	0.08 (2.1)	15000 (1034)
FNS6	HM6	SS-FMA-FNS6-HM6	1.69 (42.9)	1.13 (28.6)	0.13 (3.2)	15000 (1034)
FNS6	HM9	SS-FMA-FNS6-HM9	1.81 (46.0)	1.19 (30.2)	0.19 (4.8)	15000 (1034)
FNS8	HM4	SS-FMA-FNS8-HM4	1.69 (42.9)	1.37 (34.9)	0.08 (2.1)	15000 (1034)
FNS8	HM6	SS-FMA-FNS8-HM6	1.94 (49.2)	1.37 (34.9)	0.13 (3.2)	15000 (1034)
FNS8	HM9	SS-FMA-FNS8-HM9	2.13 (54.0)	1.37 (34.9)	0.19 (4.8)	15000 (1034)
FNS12	HM4	SS-FMA-FNS12-HM4	1.75 (44.5)	1.50 (38.1)	0.08 (2.1)	10000 (690)
FNS12	HM6	SS-FMA-FNS12-HM6	2.00 (50.8)	1.50 (38.1)	0.13 (3.2)	10000 (690)
FNS12	HM9	SS-FMA-FNS12-HM9	2.19 (55.6)	1.50 (38.1)	0.19 (4.8)	10000 (690)
FNS16	HM4	SS-FMA-FNS16-HM4	2.00 (50.8)	1.75 (44.5)	0.08 (2.1)	10000 (690)
FNS16	HM6	SS-FMA-FNS16-HM6	2.25 (57.2)	1.75 (44.5)	0.13 (3.2)	10000 (690)
FNS16	HM9	SS-FMA-FNS16-HM9	2.44 (61.9)	1.75 (44.5)	0.19 (4.8)	10000 (690)

Female NPT to T60H Series Coned and Threaded Nipples

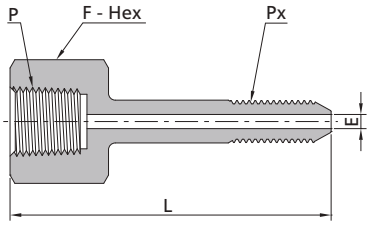

Female NPT						T60H Series Coned and Threaded Nipples
P- Connection	Px- Connection	Ordering Number	Dimensions, in. (mm)			Working Pressure psig (bar)
			L	F	E	
FNS2	HCT4	SS-FMA-FNS2-HCT4	1.87 (47.6)	0.63 (15.9)	0.08 (2.1)	15000 (1034)
FNS2	HCT6	SS-FMA-FNS2-HCT6	2.19 (55.6)	0.63 (15.9)	0.13 (3.2)	15000 (1034)
FNS4	HCT4	SS-FMA-FNS4-HCT4	2.13 (54.0)	0.94 (23.8)	0.08 (2.1)	15000 (1034)
FNS4	HCT6	SS-FMA-FNS4-HCT6	2.50 (63.5)	0.94 (23.8)	0.13 (3.2)	15000 (1034)
FNS4	HCT9	SS-FMA-FNS4-HCT9	3.06 (77.8)	0.94 (23.8)	0.19 (4.8)	15000 (1034)
FNS6	HCT4	SS-FMA-FNS6-HCT4	2.13 (54.0)	1.13 (28.6)	0.08 (2.1)	15000 (1034)
FNS6	HCT6	SS-FMA-FNS6-HCT6	2.50 (63.5)	1.13 (28.6)	0.13 (3.2)	15000 (1034)
FNS6	HCT9	SS-FMA-FNS6-HCT9	3.13 (79.4)	1.13 (28.6)	0.19 (4.8)	15000 (1034)
FNS8	HCT4	SS-FMA-FNS8-HCT4	2.37 (60.3)	1.37 (34.9)	0.08 (2.1)	15000 (1034)
FNS8	HCT6	SS-FMA-FNS8-HCT6	2.75 (69.9)	1.37 (34.9)	0.13 (3.2)	15000 (1034)
FNS8	HCT9	SS-FMA-FNS8-HCT9	3.31 (84.2)	1.37 (34.9)	0.19 (4.8)	15000 (1034)
FNS12	HCT4	SS-FMA-FNS12-HCT4	2.44 (61.9)	1.50 (38.1)	0.08 (2.1)	10000 (690)
FNS12	HCT6	SS-FMA-FNS12-HCT6	2.81 (71.4)	1.50 (38.1)	0.13 (3.2)	10000 (690)
FNS12	HCT9	SS-FMA-FNS12-HCT9	3.38 (85.8)	1.50 (38.1)	0.19 (4.8)	10000 (690)
FNS16	HCT4	SS-FMA-FNS16-HCT4	2.69 (68.3)	1.75 (44.5)	0.08 (2.1)	10000 (690)
FNS16	HCT6	SS-FMA-FNS16-HCT6	3.10 (78.8)	1.75 (44.5)	0.13 (3.2)	10000 (690)
FNS16	HCT9	SS-FMA-FNS16-HCT9	3.69 (93.8)	1.75 (44.5)	0.19 (4.8)	10000 (690)

Female NPT to Male Medium Pressure

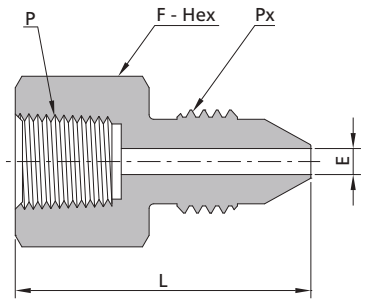

Female NPT						Male Medium Pressure
P- Connection	Px- Connection	Ordering Number	Dimensions, in. (mm)			Working Pressure psig (bar)
			L	F	E	
FNS2	MM4	SS-FMA-FNS2-MM4	1.25 (31.8)	0.63 (15.9)	0.11 (2.8)	15000 (1034)
FNS2	MM6	SS-FMA-FNS2-MM6	1.37 (34.9)	0.63 (15.9)	0.20 (5.2)	15000 (1034)
FNS2	MM9	SS-FMA-FNS2-MM9	1.50 (38.1)	0.94 (23.8)	0.31 (7.9)	15000 (1034)
FNS2	MM12	SS-FMA-FNS2-MM12	1.75 (44.5)	1.19 (30.2)	0.31 (7.9)	15000 (1034)
FNS2	MM16	SS-FMA-FNS2-MM16	2.37 (60.3)	1.50 (38.1)	0.31 (7.9)	15000 (1034)
FNS4	MM4	SS-FMA-FNS4-MM4	1.50 (38.0)	0.94 (23.8)	0.11 (2.8)	15000 (1034)
FNS4	MM6	SS-FMA-FNS4-MM6	1.63 (41.3)	0.94 (23.8)	0.20 (5.2)	15000 (1034)
FNS4	MM9	SS-FMA-FNS4-MM9	1.75 (44.5)	0.94 (23.8)	0.31 (7.9)	15000 (1034)
FNS4	MM12	SS-FMA-FNS4-MM12	1.87 (47.6)	1.19 (30.2)	0.41 (10.4)	15000 (1034)
FNS4	MM16	SS-FMA-FNS4-MM16	2.37 (60.3)	1.50 (38.1)	0.41 (10.4)	15000 (1034)
FNS6	MM4	SS-FMA-FNS6-MM4	1.50 (38.1)	1.13 (28.6)	0.11 (2.8)	15000 (1034)
FNS6	MM6	SS-FMA-FNS6-MM6	1.69 (42.9)	1.13 (28.6)	0.20 (5.2)	15000 (1034)
FNS6	MM9	SS-FMA-FNS6-MM9	1.81 (46.0)	1.13 (28.6)	0.31 (7.9)	15000 (1034)
FNS6	MM12	SS-FMA-FNS6-MM12	2.00 (50.8)	1.19 (30.2)	0.44 (11.1)	15000 (1034)
FNS6	MM16	SS-FMA-FNS6-MM16	2.37 (60.3)	1.50 (38.1)	0.56 (14.3)	15000 (1034)
FNS8	MM4	SS-FMA-FNS8-MM4	1.75 (44.5)	1.37 (34.9)	0.11 (2.8)	15000 (1034)
FNS8	MM6	SS-FMA-FNS8-MM6	1.87 (47.6)	1.37 (34.9)	0.20 (5.2)	15000 (1034)
FNS8	MM9	SS-FMA-FNS8-MM9	2.06 (52.4)	1.37 (34.9)	0.31 (7.9)	15000 (1034)
FNS8	MM12	SS-FMA-FNS8-MM12	2.19 (55.6)	1.37 (34.9)	0.44 (11.1)	15000 (1034)
FNS8	MM16	SS-FMA-FNS8-MM16	2.56 (65.1)	1.50 (38.1)	0.56 (14.3)	15000 (1034)
FNS12	MM4	SS-FMA-FNS12-MM4	1.81 (46.0)	1.50 (38.1)	0.11 (2.8)	10000 (690)
FNS12	MM6	SS-FMA-FNS12-MM6	1.94 (49.2)	1.50 (38.1)	0.20 (5.2)	10000 (690)
FNS12	MM9	SS-FMA-FNS12-MM9	2.13 (54.0)	1.50 (38.1)	0.31 (7.9)	10000 (690)
FNS12	MM12	SS-FMA-FNS12-MM12	2.31 (58.7)	1.50 (38.1)	0.44 (11.1)	10000 (690)
FNS12	MM16	SS-FMA-FNS12-MM16	2.75 (69.9)	1.50 (38.1)	0.56 (14.3)	10000 (690)
FNS16	MM4	SS-FMA-FNS16-MM4	2.06 (52.4)	1.75 (44.5)	0.11 (2.8)	10000 (690)
FNS16	MM6	SS-FMA-FNS16-MM6	2.19 (55.6)	1.75 (44.5)	0.20 (5.2)	10000 (690)
FNS16	MM9	SS-FMA-FNS16-MM9	2.44 (61.9)	1.75 (44.5)	0.31 (7.9)	10000 (690)
FNS16	MM12	SS-FMA-FNS16-MM12	2.56 (63.5)	1.75 (44.5)	0.44 (11.1)	10000 (690)
FNS16	MM16	SS-FMA-FNS16-MM16	3.06 (77.8)	1.75 (44.5)	0.56 (14.3)	10000 (690)

FITOK

Female NPT to Medium Pressure Coned and Threaded Nipples

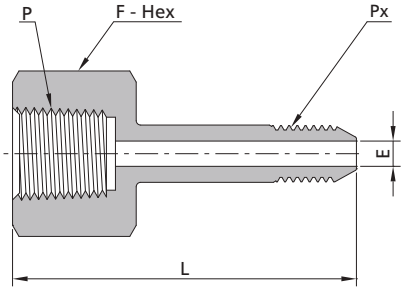

Female NPT						Medium Pressure Coned and Threaded Nipples
P-Connection	Px-Connection	Ordering Number	Dimensions, in. (mm)			Working Pressure psig (bar)
			L	F	E	
FNS2	MCT4	SS-FMA-FNS2-MCT4	1.50 (38.1)	0.63 (15.9)	0.11 (2.8)	15000 (1034)
FNS2	MCT6	SS-FMA-FNS2-MCT6	1.75 (44.5)	0.63 (15.9)	0.20 (5.2)	15000 (1034)
FNS2	MCT9	SS-FMA-FNS2-MCT9	1.94 (49.2)	0.63 (15.9)	0.31 (7.9)	15000 (1034)
FNS2	MCT12	SS-FMA-FNS2-MCT12	2.13 (54.0)	0.87 (22.2)	0.31 (7.9)	15000 (1034)
FNS2	MCT16	SS-FMA-FNS2-MCT16	2.81 (71.4)	1.13 (28.6)	0.31 (7.9)	15000 (1034)
FNS4	MCT4	SS-FMA-FNS4-MCT4	1.75 (44.5)	0.94 (23.8)	0.11 (2.8)	15000 (1034)
FNS4	MCT6	SS-FMA-FNS4-MCT6	2.00 (50.8)	0.94 (23.8)	0.20 (5.2)	15000 (1034)
FNS4	MCT9	SS-FMA-FNS4-MCT9	2.19 (55.6)	0.94 (23.8)	0.31 (7.9)	15000 (1034)
FNS4	MCT12	SS-FMA-FNS4-MCT12	2.44 (61.9)	0.94 (23.8)	0.41 (10.4)	15000 (1034)
FNS4	MCT16	SS-FMA-FNS4-MCT16	2.94 (74.6)	1.13 (28.6)	0.41 (10.4)	15000 (1034)
FNS6	MCT6	SS-FMA-FNS6-MCT6	2.06 (52.4)	1.13 (28.6)	0.20 (5.2)	15000 (1034)
FNS6	MCT9	SS-FMA-FNS6-MCT9	2.25 (57.2)	1.13 (28.6)	0.31 (7.9)	15000 (1034)
FNS6	MCT12	SS-FMA-FNS6-MCT12	2.50 (63.5)	1.13 (28.6)	0.44 (11.1)	15000 (1034)
FNS6	MCT16	SS-FMA-FNS6-MCT16	3.00 (76.2)	1.13 (28.6)	0.56 (14.3)	15000 (1034)
FNS8	MCT9	SS-FMA-FNS8-MCT9	2.50 (63.5)	1.37 (34.9)	0.31 (7.9)	15000 (1034)
FNS8	MCT12	SS-FMA-FNS8-MCT12	2.75 (69.9)	1.37 (34.9)	0.44 (11.1)	15000 (1034)
FNS8	MCT16	SS-FMA-FNS8-MCT16	3.25 (82.6)	1.37 (34.9)	0.56 (14.3)	15000 (1034)
FNS12	MCT9	SS-FMA-FNS12-MCT9	2.56 (65.1)	1.50 (38.1)	0.31 (7.9)	10000 (690)
FNS12	MCT12	SS-FMA-FNS12-MCT12	2.81 (71.4)	1.50 (38.1)	0.44 (11.1)	10000 (690)
FNS12	MCT16	SS-FMA-FNS12-MCT16	3.39 (86.0)	1.50 (38.1)	0.56 (14.3)	10000 (690)
FNS16	MCT12	SS-FMA-FNS16-MCT12	3.13 (79.4)	1.75 (44.5)	0.44 (11.1)	10000 (690)
FNS16	MCT16	SS-FMA-FNS16-MCT16	3.63 (92.2)	1.75 (44.5)	0.56 (14.3)	10000 (690)

Female NPT to Male 20D Series

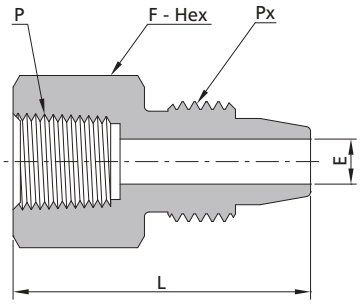

Female NPT						Male 20D Series
P-Connection	Px-Connection	Ordering Number	Dimensions, in. (mm)			Working Pressure psig (bar)
			L	F	E	
FNS2	DFM2	SS-FMA-FNS2-DFM2	1.24 (31.6)	0.63 (15.9)	0.09 (2.4)	15000 (1034)
FNS2	DFM4	SS-FMA-FNS2-DFM4	1.37 (34.7)	0.63 (15.9)	0.19 (4.8)	15000 (1034)
FNS2	DFM6	SS-FMA-FNS2-DFM6	1.39 (35.4)	0.75 (19.1)	0.25 (6.4)	15000 (1034)
FNS2	DFM8	SS-FMA-FNS2-DFM8	1.47 (37.4)	0.94 (23.8)	0.37 (9.5)	15000 (1034)
FNS4	DFM2	SS-FMA-FNS4-DFM2	1.43 (36.3)	0.94 (23.8)	0.09 (2.4)	15000 (1034)
FNS4	DFM4	SS-FMA-FNS4-DFM4	1.62 (41.1)	0.94 (23.8)	0.19 (4.8)	15000 (1034)
FNS4	DFM6	SS-FMA-FNS4-DFM6	1.65 (41.8)	0.94 (23.8)	0.25 (6.4)	15000 (1034)
FNS4	DFM8	SS-FMA-FNS4-DFM8	1.72 (43.8)	0.94 (23.8)	0.37 (9.5)	15000 (1034)
FNS6	DFM2	SS-FMA-FNS6-DFM2	1.56 (39.5)	1.13 (28.6)	0.09 (2.4)	15000 (1034)
FNS6	DFM4	SS-FMA-FNS6-DFM4	1.68 (42.7)	1.13 (28.6)	0.19 (4.8)	15000 (1034)
FNS6	DFM6	SS-FMA-FNS6-DFM6	1.71 (43.4)	1.13 (28.6)	0.25 (6.4)	15000 (1034)
FNS6	DFM8	SS-FMA-FNS6-DFM8	1.85 (47.0)	1.13 (28.6)	0.37 (9.5)	15000 (1034)
FNS8	DFM2	SS-FMA-FNS8-DFM2	1.74 (44.3)	1.37 (34.9)	0.09 (2.4)	15000 (1034)
FNS8	DFM4	SS-FMA-FNS8-DFM4	1.87 (47.5)	1.37 (34.9)	0.19 (4.8)	15000 (1034)
FNS8	DFM6	SS-FMA-FNS8-DFM6	1.96 (49.7)	1.37 (34.9)	0.25 (6.4)	15000 (1034)
FNS8	DFM8	SS-FMA-FNS8-DFM8	2.04 (51.7)	1.37 (34.9)	0.37 (9.5)	15000 (1034)
FNS12	DFM2	SS-FMA-FNS12-DFM2	1.81 (45.9)	1.50 (38.1)	0.09 (2.4)	10000 (690)
FNS12	DFM4	SS-FMA-FNS12-DFM4	1.99 (50.6)	1.50 (38.1)	0.19 (4.8)	10000 (690)
FNS12	DFM6	SS-FMA-FNS12-DFM6	2.02 (51.3)	1.50 (38.1)	0.25 (6.4)	10000 (690)
FNS12	DFM8	SS-FMA-FNS12-DFM8	2.10 (53.3)	1.50 (38.1)	0.37 (9.5)	10000 (690)
FNS16	DFM2	SS-FMA-FNS16-DFM2	2.12 (53.8)	1.75 (44.5)	0.09 (2.4)	10000 (690)
FNS16	DFM4	SS-FMA-FNS16-DFM4	2.24 (57.0)	1.75 (44.5)	0.19 (4.8)	10000 (690)
FNS16	DFM6	SS-FMA-FNS16-DFM6	2.27 (57.7)	1.75 (44.5)	0.25 (6.4)	10000 (690)
FNS16	DFM8	SS-FMA-FNS16-DFM8	2.35 (59.7)	1.75 (44.5)	0.37 (9.5)	10000 (690)

Male to Male - MMA

Male High Pressure to Male High Pressure

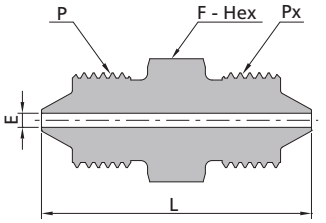

Male High Pressure						Male High Pressure
P- Connection	Px- Connection	Ordering Number	Dimensions, in. (mm)			Working Pressure psig (bar)
			L	F	E	
HM4	HM4	SS-MMA-HM4	1.63 (41.3)	0.63 (15.9)	0.08 (2.1)	60000 (4137)
HM6	HM4	SS-MMA-HM6-HM4	1.94 (49.2)	0.81 (20.6)	0.08 (2.1)	60000 (4137)
HM6	HM6	SS-MMA-HM6	2.19 (55.6)	0.81 (20.6)	0.13 (3.2)	60000 (4137)
HM9	HM4	SS-MMA-HM9-HM4	2.19 (55.6)	1.19 (30.2)	0.08 (2.1)	60000 (4137)
HM9	HM6	SS-MMA-HM9-HM6	2.50 (63.5)	1.19 (30.2)	0.13 (3.2)	60000 (4137)
HM9	HM9	SS-MMA-HM9	2.63 (66.7)	1.19 (30.2)	0.19 (4.8)	60000 (4137)

Male High Pressure to Male Medium Pressure

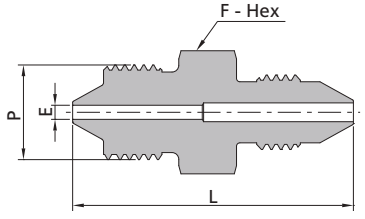

Male High Pressure						Male Medium Pressure
P- Connection	Px- Connection	Ordering Number	Dimensions, in. (mm)			Working Pressure psig (bar)
			L	F	E	
HM4	MM4	SS-MMA-HM4-MM4	1.69 (42.9)	0.63 (15.9)	0.08 (2.1)	20000 (1379)
HM4	MM6	SS-MMA-HM4-MM6	1.81 (46.0)	0.63 (15.9)	0.08 (2.1)	20000 (1379)
HM4	MM9	SS-MMA-HM4-MM9	2.06 (52.4)	0.94 (23.8)	0.08 (2.1)	20000 (1379)
HM4	MM12	SS-MMA-HM4-MM12	2.37 (60.3)	1.19 (30.2)	0.08 (2.1)	20000 (1379)
HM4	MM16	SS-MMA-HM4-MM16	2.94 (74.6)	1.50 (38.1)	0.08 (2.1)	20000 (1379)
HM6	MM4	SS-MMA-HM6-MM4	2.00 (50.8)	0.81 (20.6)	0.11 (2.8)	20000 (1379)
HM6	MM6	SS-MMA-HM6-MM6	2.13 (54.0)	0.81 (20.6)	0.13 (3.2)	20000 (1379)
HM6	MM9	SS-MMA-HM6-MM9	2.37 (60.3)	0.94 (23.8)	0.13 (3.2)	20000 (1379)
HM6	MM12	SS-MMA-HM6-MM12	2.63 (66.7)	1.19 (30.2)	0.13 (3.2)	20000 (1379)
HM6	MM16	SS-MMA-HM6-MM16	3.13 (79.4)	1.50 (38.1)	0.13 (3.2)	20000 (1379)
HM9	MM4	SS-MMA-HM9-MM4	2.25 (57.2)	1.19 (30.2)	0.11 (2.8)	20000 (1379)
HM9	MM6	SS-MMA-HM9-MM6	2.44 (61.9)	1.19 (30.2)	0.19 (4.8)	20000 (1379)
HM9	MM9	SS-MMA-HM9-MM9	2.63 (66.7)	1.19 (30.2)	0.19 (4.8)	20000 (1379)
HM9	MM12	SS-MMA-HM9-MM12	2.80 (71.0)	1.19 (30.2)	0.19 (4.8)	20000 (1379)
HM9	MM16	SS-MMA-HM9-MM16	3.31 (84.2)	1.50 (38.1)	0.19 (4.8)	20000 (1379)

Male High Pressure to Male 20D Series

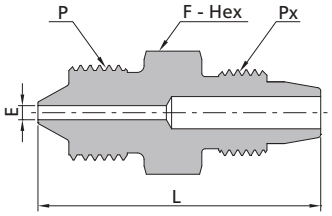

Male High Pressure						Male 20D Series
P-Connection	Px-Connection	Ordering Number	Dimensions, in. (mm)			Working Pressure psig (bar)
			L	F	E	
HM4	DFM2	SS-MMA-HM4-DFM2	1.60(40.6)	0.63 (15.9)	0.08 (2.1)	20000 (1379)
HM4	DFM4	SS-MMA-HM4-DFM4	1.75(44.5)	0.63 (15.9)	0.08 (2.1)	20000 (1379)
HM4	DFM6	SS-MMA-HM4-DFM6	1.81(45.9)	0.75 (19.1)	0.08 (2.1)	20000 (1379)
HM4	DFM8	SS-MMA-HM4-DFM8	2.02(51.2)	0.94 (23.8)	0.08 (2.1)	20000 (1379)
HM6	DFM2	SS-MMA-HM6-DFM2	1.93(49.0)	0.81 (20.6)	0.09 (2.4)	20000 (1379)
HM6	DFM4	SS-MMA-HM6-DFM4	2.08(52.9)	0.81 (20.6)	0.13 (3.2)	20000 (1379)
HM6	DFM6	SS-MMA-HM6-DFM6	2.10(53.3)	0.81 (20.6)	0.13 (3.2)	20000 (1379)
HM6	DFM8	SS-MMA-HM6-DFM8	2.37(60.1)	0.94 (23.8)	0.13 (3.2)	20000 (1379)
HM9	DFM2	SS-MMA-HM9-DFM2	2.24(56.8)	1.19 (30.2)	0.09 (2.4)	20000 (1379)
HM9	DFM4	SS-MMA-HM9-DFM4	2.39(60.7)	1.19 (30.2)	0.19 (4.8)	20000 (1379)
HM9	DFM6	SS-MMA-HM9-DFM6	2.41(61.1)	1.19 (30.2)	0.19 (4.8)	20000 (1379)
HM9	DFM8	SS-MMA-HM9-DFM8	2.54(64.4)	1.19 (30.2)	0.19 (4.8)	20000 (1379)

Male High Pressure to Male NPT

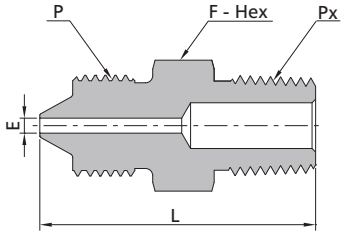

Male High Pressure						Male NPT
P-Connection	Px-Connection	Ordering Number	Dimensions, in. (mm)			Working Pressure psig (bar)
			L	F	E	
HM4	NS2	SS-MMA-HM4-NS2	1.37 (34.9)	0.63 (15.9)	0.08 (2.1)	15000 (1034)
HM4	NS4	SS-MMA-HM4-NS4	1.56 (39.7)	0.63 (15.9)	0.08 (2.1)	15000 (1034)
HM4	NS6	SS-MMA-HM4-NS6	1.56 (39.7)	0.69 (17.5)	0.08 (2.1)	15000 (1034)
HM4	NS8	SS-MMA-HM4-NS8	1.81 (46.0)	0.87 (22.2)	0.08 (2.1)	15000 (1034)
HM4	NS12	SS-MMA-HM4-NS12	1.87 (47.6)	1.06 (27.0)	0.08 (2.1)	10000 (690)
HM4	NS16	SS-MMA-HM4-NS16	2.19 (55.6)	1.37 (34.9)	0.08 (2.1)	10000 (690)
HM6	NS2	SS-MMA-HM6-NS2	1.69 (42.9)	0.81 (20.6)	0.13 (3.2)	15000 (1034)
HM6	NS4	SS-MMA-HM6-NS4	1.87 (47.6)	0.81 (20.6)	0.13 (3.2)	15000 (1034)
HM6	NS6	SS-MMA-HM6-NS6	1.87 (47.6)	0.81 (20.6)	0.13 (3.2)	15000 (1034)
HM6	NS8	SS-MMA-HM6-NS8	2.06 (52.4)	0.87 (22.2)	0.13 (3.2)	15000 (1034)
HM6	NS12	SS-MMA-HM6-NS12	2.13 (54.0)	1.06 (27.0)	0.13 (3.2)	10000 (690)
HM6	NS16	SS-MMA-HM6-NS16	2.44 (61.9)	1.37 (34.9)	0.13 (3.2)	10000 (690)
HM9	NS2	SS-MMA-HM9-NS2	2.00 (50.8)	1.19 (30.2)	0.19 (4.8)	15000 (1034)
HM9	NS4	SS-MMA-HM9-NS4	2.13 (54.0)	1.19 (30.2)	0.19 (4.8)	15000 (1034)
HM9	NS6	SS-MMA-HM9-NS6	2.13 (54.0)	1.19 (30.2)	0.19 (4.8)	15000 (1034)
HM9	NS8	SS-MMA-HM9-NS8	2.37 (60.3)	1.19 (30.2)	0.19 (4.8)	15000 (1034)
HM9	NS12	SS-MMA-HM9-NS12	2.37 (60.3)	1.19 (30.2)	0.19 (4.8)	10000 (690)
HM9	NS16	SS-MMA-HM9-NS16	2.63 (66.7)	1.37 (34.9)	0.19 (4.8)	10000 (690)

FITOK

Male High Pressure to Male JIC

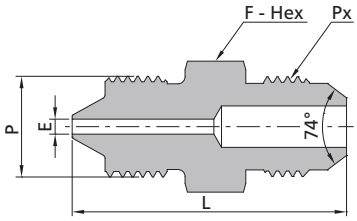

Male High Pressure						Male JIC
P-Connection	Px-Connection	Ordering Number	Dimensions, in. (mm)			Working Pressure psig (bar)
			L	F	E	
HM4	JM4	SS-MMA-HM4-JM4	1.51 (38.4)	0.63 (15.9)	0.08 (2.1)	20000 (1379)
HM4	JM6	SS-MMA-HM4-JM6	1.56 (39.7)	0.63 (15.9)	0.08 (2.1)	20000 (1379)
HM4	JM8	SS-MMA-HM4-JM8	1.69 (42.9)	0.81 (20.6)	0.08 (2.1)	20000 (1379)
HM4	JM10	SS-MMA-HM4-JM10	1.81 (46.0)	0.94 (23.8)	0.08 (2.1)	20000 (1379)
HM4	JM12	SS-MMA-HM4-JM12	2.00 (50.8)	1.13 (28.6)	0.08 (2.1)	15000 (1034)
HM4	JM16	SS-MMA-HM4-JM16	2.13 (54.0)	1.37 (34.9)	0.08 (2.1)	15000 (1034)
HM6	JM4	SS-MMA-HM6-JM4	1.81 (46.0)	0.81 (20.6)	0.13 (3.2)	20000 (1379)
HM6	JM6	SS-MMA-HM6-JM6	1.81 (46.0)	0.81 (20.6)	0.13 (3.2)	20000 (1379)
HM6	JM8	SS-MMA-HM6-JM8	1.94 (49.2)	0.81 (20.6)	0.13 (3.2)	20000 (1379)
HM6	JM10	SS-MMA-HM6-JM10	2.06 (52.4)	0.94 (23.8)	0.13 (3.2)	20000 (1379)
HM6	JM12	SS-MMA-HM6-JM12	2.25 (57.2)	1.13 (28.6)	0.13 (3.2)	15000 (1034)
HM6	JM16	SS-MMA-HM6-JM16	2.37 (60.3)	1.37 (34.9)	0.13 (3.2)	15000 (1034)
HM9	JM4	SS-MMA-HM9-JM4	2.13 (54.0)	1.19 (30.2)	0.17 (4.4)	20000 (1379)
HM9	JM6	SS-MMA-HM9-JM6	2.13 (54.0)	1.19 (30.2)	0.19 (4.8)	20000 (1379)
HM9	JM8	SS-MMA-HM9-JM8	2.25 (57.2)	1.19 (30.2)	0.19 (4.8)	20000 (1379)
HM9	JM10	SS-MMA-HM9-JM10	2.37 (60.3)	1.19 (30.2)	0.19 (4.8)	20000 (1379)
HM9	JM12	SS-MMA-HM9-JM12	2.44 (61.9)	1.19 (30.2)	0.19 (4.8)	15000 (1034)
HM9	JM16	SS-MMA-HM9-JM16	2.56 (65.0)	1.37 (34.9)	0.19 (4.8)	15000 (1034)

Male High Pressure to Male Type "M"

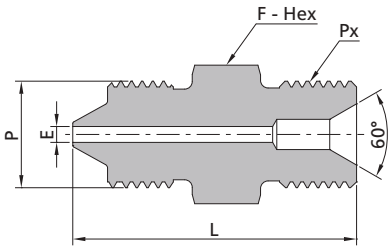

Male High Pressure						Male Type "M"
P-Connection	Px-Connection	Ordering Number	Dimensions, in. (mm)			Working Pressure psig (bar)
			L	F	E	
HM4	TM9	SS-MMA-HM4-TM9	1.46 (37.1)	0.63 (15.9)	0.08 (2.1)	60000 (4137)
HM4	TM12	SS-MMA-HM4-TM12	1.63 (41.4)	0.75 (19.1)	0.08 (2.1)	30000 (2068)
HM4	TM14	SS-MMA-HM4-TM14	1.83 (46.6)	1.00 (25.4)	0.08 (2.1)	50000 (3447)
HM4	TM16	SS-MMA-HM4-TM16	1.72 (43.7)	1.00 (25.4)	0.08 (2.1)	30000 (2068)
HM4	TM21	SS-MMA-HM4-TM21	1.84 (46.7)	1.37 (34.9)	0.08 (2.1)	20000 (1379)
HM6	TM9	SS-MMA-HM6-TM9	1.77 (44.9)	0.81 (20.6)	0.09 (2.4)	60000 (4137)
HM6	TM12	SS-MMA-HM6-TM12	1.90 (48.2)	0.81 (20.6)	0.13 (3.2)	30000 (2068)
HM6	TM14	SS-MMA-HM6-TM14	2.09 (53.0)	1.00 (25.4)	0.13 (3.2)	50000 (3447)
HM6	TM16	SS-MMA-HM6-TM16	1.97 (50.1)	1.00 (25.4)	0.13 (3.2)	30000 (2068)
HM6	TM21	SS-MMA-HM6-TM21	2.09 (53.1)	1.37 (34.9)	0.13 (3.2)	20000 (1379)
HM9	TM9	SS-MMA-HM9-TM9	2.07 (52.6)	1.19 (30.2)	0.09 (2.4)	60000 (4137)
HM9	TM12	SS-MMA-HM9-TM12	2.20 (55.9)	1.19 (30.2)	0.19 (4.8)	30000 (2068)
HM9	TM14	SS-MMA-HM9-TM14	2.33 (59.1)	1.19 (30.2)	0.15 (3.8)	50000 (3447)
HM9	TM16	SS-MMA-HM9-TM16	2.21 (56.2)	1.19 (30.2)	0.19 (4.8)	30000 (2068)
HM9	TM21	SS-MMA-HM9-TM21	2.26 (57.4)	1.37 (34.9)	0.19 (4.8)	20000 (1379)

Male High Pressure to Male ISO Parallel

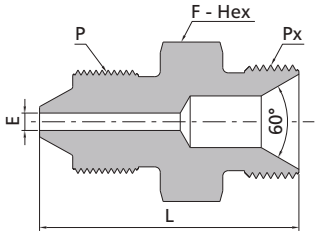

Male High Pressure						Male ISO Parallel
P-Connection	Px-Connection	Ordering Number	Dimensions, in. (mm)			Working Pressure psig (bar)
			L	F	E	
HM4	HBP4	SS-MMA-HM4-HBP4	1.37 (34.8)	0.63 (15.9)	0.08 (2.1)	20000 (1379)
HM4	HBP6	SS-MMA-HM4-HBP6	1.49 (37.8)	0.81 (20.6)	0.08 (2.1)	20000 (1379)
HM4	HBP8	SS-MMA-HM4-HBP8	1.63 (41.4)	1.00 (25.4)	0.08 (2.1)	20000 (1379)
HM6	HBP4	SS-MMA-HM6-HBP4	1.70 (43.2)	0.81 (20.6)	0.13 (3.2)	20000 (1379)
HM6	HBP6	SS-MMA-HM6-HBP6	1.74 (44.2)	0.81 (20.6)	0.13 (3.2)	20000 (1379)
HM6	HBP8	SS-MMA-HM6-HBP8	1.88 (47.7)	1.00 (25.4)	0.13 (3.2)	20000 (1379)
HM9	HBP4	SS-MMA-HM9-HBP4	2.00 (50.9)	1.19 (30.2)	0.15 (3.8)	20000 (1379)
HM9	HBP6	SS-MMA-HM9-HBP6	2.05 (52.0)	1.19 (30.2)	0.19 (4.8)	20000 (1379)
HM9	HBP8	SS-MMA-HM9-HBP8	2.12 (53.9)	1.19 (30.2)	0.19 (4.8)	20000 (1379)
HM9	HBP12	SS-MMA-HM9-HBP12	2.24 (57.0)	1.25 (31.8)	0.19 (4.8)	20000 (1379)
HM9	HBP16	SS-MMA-HM9-HBP16	2.41 (61.1)	1.50 (38.1)	0.19 (4.8)	20000 (1379)

FITOK

Male Medium Pressure to Male Medium Pressure

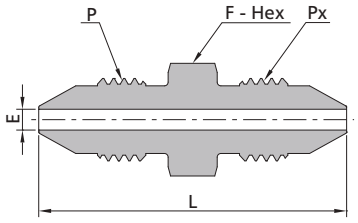

Male Medium Pressure						Male Medium Pressure
P-Connection	Px-Connection	Ordering Number	Dimensions, in. (mm)			Working Pressure psig (bar)
			L	F	E	
MM4	MM4	SS-MMA-MM4	1.63 (41.3)	0.50 (12.7)	0.11 (2.8)	20000 (1379)
MM6	MM4	SS-MMA-MM6-MM4	1.87 (47.6)	0.63 (15.9)	0.11 (2.8)	20000 (1379)
MM6	MM6	SS-MMA-MM6	2.00 (50.8)	0.63 (15.9)	0.20 (5.2)	20000 (1379)
MM9	MM4	SS-MMA-MM9-MM4	2.13 (54.0)	0.94 (23.8)	0.11 (2.8)	20000 (1379)
MM9	MM6	SS-MMA-MM9-MM6	2.31 (58.7)	0.94 (23.8)	0.20 (5.2)	20000 (1379)
MM9	MM9	SS-MMA-MM9	2.50 (63.5)	0.94 (23.8)	0.31 (7.9)	20000 (1379)
MM12	MM4	SS-MMA-MM12-MM4	2.44 (61.9)	1.19 (30.2)	0.11 (2.8)	20000 (1379)
MM12	MM6	SS-MMA-MM12-MM6	2.56 (65.1)	1.19 (30.2)	0.20 (5.2)	20000 (1379)
MM12	MM9	SS-MMA-MM12-MM9	2.75 (69.9)	1.19 (30.2)	0.31 (7.9)	20000 (1379)
MM12	MM12	SS-MMA-MM12	2.94 (74.6)	1.19 (30.2)	0.44 (11.1)	20000 (1379)
MM16	MM4	SS-MMA-MM16-MM4	3.00 (76.2)	1.50 (38.1)	0.11 (2.8)	20000 (1379)
MM16	MM6	SS-MMA-MM16-MM6	3.13 (79.4)	1.50 (38.1)	0.20 (5.2)	20000 (1379)
MM16	MM9	SS-MMA-MM16-MM9	3.31 (84.2)	1.50 (38.1)	0.31 (7.9)	20000 (1379)
MM16	MM12	SS-MMA-MM16-MM12	3.44 (87.4)	1.50 (38.1)	0.44 (11.1)	20000 (1379)
MM16	MM16	SS-MMA-MM16	3.94 (100.2)	1.50 (38.1)	0.56 (14.3)	20000 (1379)

Male Medium Pressure to Male 20D Series

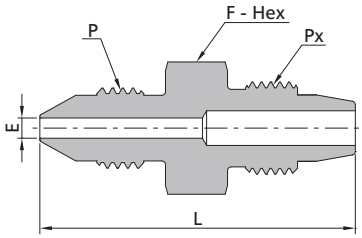

Male Medium Pressure						Male 20D Series
P-Connection	Px-Connection	Ordering Number	Dimensions, in. (mm)			Working Pressure psig (bar)
			L	F	E	
MM4	DFM2	SS-MMA-MM4-DFM2	1.62(41.2)	0.50 (12.7)	0.09 (2.4)	20000 (1379)
MM4	DFM4	SS-MMA-MM4-DFM4	1.81(46.1)	0.63 (15.9)	0.11 (2.8)	20000 (1379)
MM4	DFM6	SS-MMA-MM4-DFM6	1.87(47.5)	0.75 (19.1)	0.11 (2.8)	20000 (1379)
MM4	DFM8	SS-MMA-MM4-DFM8	2.08(52.8)	0.94 (23.8)	0.11 (2.8)	20000 (1379)
MM6	DFM2	SS-MMA-MM6-DFM2	1.81(45.9)	0.63 (15.9)	0.09 (2.4)	20000 (1379)
MM6	DFM4	SS-MMA-MM6-DFM4	1.96(49.8)	0.63 (15.9)	0.19 (4.8)	20000 (1379)
MM6	DFM6	SS-MMA-MM6-DFM6	2.02(51.2)	0.75 (19.1)	0.20 (5.2)	20000 (1379)
MM6	DFM8	SS-MMA-MM6-DFM8	2.22(56.5)	0.94 (23.8)	0.20 (5.2)	20000 (1379)
MM9	DFM2	SS-MMA-MM9-DFM2	2.11(53.7)	0.94 (23.8)	0.09 (2.4)	20000 (1379)
MM9	DFM4	SS-MMA-MM9-DFM4	2.27(57.6)	0.94 (23.8)	0.19 (4.8)	20000 (1379)
MM9	DFM6	SS-MMA-MM9-DFM6	2.28(58.0)	0.94 (23.8)	0.25 (6.4)	20000 (1379)
MM9	DFM8	SS-MMA-MM9-DFM8	2.41(61.3)	0.94 (23.8)	0.31 (7.9)	20000 (1379)
MM12	DFM2	SS-MMA-MM12-DFM2	2.38(60.5)	1.19 (30.2)	0.09 (2.4)	20000 (1379)
MM12	DFM4	SS-MMA-MM12-DFM4	2.54(64.4)	1.19 (30.2)	0.19 (4.8)	20000 (1379)
MM12	DFM6	SS-MMA-MM12-DFM6	2.55(64.8)	1.19 (30.2)	0.25 (6.4)	20000 (1379)
MM12	DFM8	SS-MMA-MM12-DFM8	2.68(68.1)	1.19 (30.2)	0.37 (9.5)	20000 (1379)
MM16	DFM2	SS-MMA-MM16-DFM2	2.93(74.3)	1.50 (38.1)	0.09 (2.4)	20000 (1379)
MM16	DFM4	SS-MMA-MM16-DFM4	3.08(78.2)	1.50 (38.1)	0.19 (4.8)	20000 (1379)
MM16	DFM6	SS-MMA-MM16-DFM6	3.09(78.6)	1.50 (38.1)	0.37 (9.5)	20000 (1379)
MM16	DFM8	SS-MMA-MM16-DFM8	3.22(81.9)	1.50 (38.1)	0.37 (9.5)	20000 (1379)

Male Medium Pressure to Male NPT

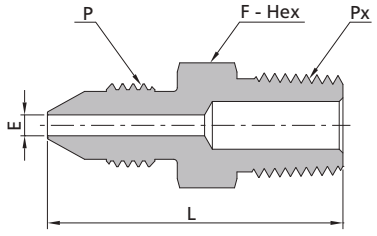

Male Medium Pressure						Male NPT
P-Connection	Px-Connection	Ordering Number	Dimensions, in. (mm)			Working Pressure psig (bar)
			L	F	E	
MM4	NS2	SS-MMA-MM4-NS2	1.37 (34.9)	0.50 (12.7)	0.11 (2.8)	15000 (1034)
MM4	NS4	SS-MMA-MM4-NS4	1.56 (39.7)	0.56 (14.3)	0.11 (2.8)	15000 (1034)
MM4	NS6	SS-MMA-MM4-NS6	1.63 (41.3)	0.69 (17.5)	0.11 (2.8)	15000 (1034)
MM4	NS8	SS-MMA-MM4-NS8	1.87 (47.6)	0.87 (22.2)	0.11 (2.8)	15000 (1034)
MM4	NS12	SS-MMA-MM4-NS12	1.94 (49.2)	1.06 (27.0)	0.11 (2.8)	10000 (690)
MM4	NS16	SS-MMA-MM4-NS16	2.25 (57.2)	1.37 (34.9)	0.11 (2.8)	10000 (690)
MM6	NS2	SS-MMA-MM6-NS2	1.56 (39.7)	0.63 (15.9)	0.19 (4.8)	15000 (1034)
MM6	NS4	SS-MMA-MM6-NS4	1.75 (44.5)	0.63 (15.9)	0.20 (5.2)	15000 (1034)
MM6	NS6	SS-MMA-MM6-NS6	1.75 (44.5)	0.69 (17.5)	0.20 (5.2)	15000 (1034)
MM6	NS8	SS-MMA-MM6-NS8	2.00 (50.8)	0.87 (22.2)	0.20 (5.2)	15000 (1034)
MM6	NS12	SS-MMA-MM6-NS12	2.06 (52.4)	1.06 (27.0)	0.20 (5.2)	10000 (690)
MM6	NS16	SS-MMA-MM6-NS16	2.37 (60.3)	1.37 (34.9)	0.20 (5.2)	10000 (690)
MM9	NS2	SS-MMA-MM9-NS2	1.87 (47.6)	0.94 (23.8)	0.19 (4.8)	15000 (1034)
MM9	NS4	SS-MMA-MM9-NS4	2.06 (52.4)	0.94 (23.8)	0.25 (6.4)	15000 (1034)
MM9	NS6	SS-MMA-MM9-NS6	2.06 (52.4)	0.94 (23.8)	0.31 (7.9)	15000 (1034)
MM9	NS8	SS-MMA-MM9-NS8	2.25 (57.2)	0.94 (23.8)	0.31 (7.9)	15000 (1034)
MM9	NS12	SS-MMA-MM9-NS12	2.31 (58.7)	1.06 (27.0)	0.31 (7.9)	10000 (690)
MM9	NS16	SS-MMA-MM9-NS16	2.56 (65.1)	1.37 (34.9)	0.31 (7.9)	10000 (690)
MM12	NS2	SS-MMA-MM12-NS2	2.13 (54.0)	1.19 (30.2)	0.19 (4.8)	15000 (1034)
MM12	NS4	SS-MMA-MM12-NS4	2.31 (58.7)	1.19 (30.2)	0.25 (6.4)	15000 (1034)
MM12	NS6	SS-MMA-MM12-NS6	2.31 (58.7)	1.19 (30.2)	0.31 (7.9)	15000 (1034)
MM12	NS8	SS-MMA-MM12-NS8	2.50 (63.5)	1.19 (30.2)	0.38 (9.6)	15000 (1034)
MM12	NS12	SS-MMA-MM12-NS12	2.50 (63.5)	1.19 (30.2)	0.44 (11.1)	10000 (690)
MM12	NS16	SS-MMA-MM12-NS16	2.75 (69.9)	1.37 (34.9)	0.44 (11.1)	10000 (690)
MM16	NS2	SS-MMA-MM16-NS2	2.69 (68.3)	1.50 (38.1)	0.19 (4.8)	15000 (1034)
MM16	NS4	SS-MMA-MM16-NS4	2.81 (71.4)	1.50 (38.1)	0.25 (6.4)	15000 (1034)
MM16	NS6	SS-MMA-MM16-NS6	2.81 (71.4)	1.50 (38.1)	0.31 (7.9)	15000 (1034)
MM16	NS8	SS-MMA-MM16-NS8	3.06 (77.8)	1.50 (38.1)	0.38 (9.6)	15000 (1034)
MM16	NS12	SS-MMA-MM16-NS12	3.06 (82.6)	1.50 (38.1)	0.56 (14.3)	10000 (690)
MM16	NS16	SS-MMA-MM16-NS16	3.25 (82.6)	1.50 (38.1)	0.56 (14.3)	10000 (690)

Male Medium Pressure to Male JIC

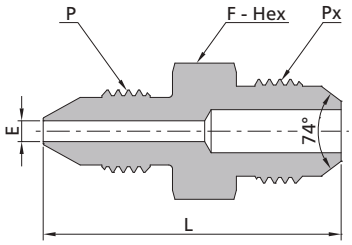

Male Medium Pressure						Male JIC
P-Connection	Px-Connection	Ordering Number	Dimensions, in. (mm)			Working Pressure psig (bar)
			L	F	E	
MM4	JM4	SS-MMA-MM4-JM4	1.50 (38.1)	0.50 (12.7)	0.11 (2.8)	20000 (1379)
MM4	JM6	SS-MMA-MM4-JM6	1.63 (41.3)	0.63 (15.9)	0.11 (2.8)	20000 (1379)
MM4	JM8	SS-MMA-MM4-JM8	1.75 (44.5)	0.81 (20.6)	0.11 (2.8)	20000 (1379)
MM4	JM10	SS-MMA-MM4-JM10	1.87 (47.6)	0.94 (23.8)	0.11 (2.8)	20000 (1379)
MM4	JM12	SS-MMA-MM4-JM12	2.06 (52.4)	1.13 (28.6)	0.11 (2.8)	15000 (1034)
MM4	JM16	SS-MMA-MM4-JM16	2.19 (55.6)	1.37 (34.9)	0.11 (2.8)	15000 (1034)
MM6	JM4	SS-MMA-MM6-JM4	1.75 (44.5)	0.63 (15.9)	0.17 (4.4)	20000 (1379)
MM6	JM6	SS-MMA-MM6-JM6	1.75 (44.5)	0.63 (15.9)	0.20 (5.2)	20000 (1379)
MM6	JM8	SS-MMA-MM6-JM8	1.87 (47.6)	0.81 (20.6)	0.20 (5.2)	20000 (1379)
MM6	JM10	SS-MMA-MM6-JM10	2.06 (52.4)	0.94 (23.8)	0.20 (5.2)	20000 (1379)
MM6	JM12	SS-MMA-MM6-JM12	2.25 (57.2)	1.13 (28.6)	0.20 (5.2)	15000 (1034)
MM6	JM16	SS-MMA-MM6-JM16	2.37 (60.3)	1.37 (34.9)	0.20 (5.2)	15000 (1034)
MM9	JM4	SS-MMA-MM9-JM4	2.00 (50.8)	0.94 (23.8)	0.17 (4.4)	20000 (1379)
MM9	JM6	SS-MMA-MM9-JM6	2.01 (51.0)	0.94 (23.8)	0.23 (5.8)	20000 (1379)
MM9	JM8	SS-MMA-MM9-JM8	2.13 (54.0)	0.94 (23.8)	0.31 (7.9)	20000 (1379)
MM9	JM10	SS-MMA-MM9-JM10	2.25 (57.2)	0.94 (23.8)	0.31 (7.9)	20000 (1379)
MM9	JM12	SS-MMA-MM9-JM12	2.44 (61.9)	1.13 (28.6)	0.31 (7.9)	15000 (1034)
MM9	JM16	SS-MMA-MM9-JM16	2.56 (65.1)	1.37 (34.9)	0.31 (7.9)	15000 (1034)
MM12	JM4	SS-MMA-MM12-JM4	2.31 (58.7)	1.19 (30.2)	0.17 (4.4)	20000 (1379)
MM12	JM6	SS-MMA-MM12-JM6	2.31 (58.7)	1.19 (30.2)	0.23 (5.8)	20000 (1379)
MM12	JM8	SS-MMA-MM12-JM8	2.37 (60.3)	1.19 (30.2)	0.31 (7.9)	20000 (1379)
MM12	JM10	SS-MMA-MM12-JM10	2.50 (63.5)	1.19 (30.2)	0.37 (9.4)	20000 (1379)
MM12	JM12	SS-MMA-MM12-JM12	2.63 (66.7)	1.19 (30.2)	0.44 (11.1)	15000 (1034)
MM12	JM16	SS-MMA-MM12-JM16	2.69 (68.3)	1.37 (34.9)	0.44 (11.1)	15000 (1034)
MM16	JM4	SS-MMA-MM16-JM4	2.81 (71.4)	1.50 (38.1)	0.17 (4.4)	20000 (1379)
MM16	JM6	SS-MMA-MM16-JM6	2.81 (71.4)	1.50 (38.1)	0.23 (5.8)	20000 (1379)
MM16	JM8	SS-MMA-MM16-JM8	2.94 (74.6)	1.50 (38.1)	0.31 (7.9)	20000 (1379)
MM16	JM10	SS-MMA-MM16-JM10	3.06 (77.8)	1.50 (38.1)	0.37 (9.4)	20000 (1379)
MM16	JM12	SS-MMA-MM16-JM12	3.13 (79.4)	1.50 (38.1)	0.46 (11.6)	15000 (1034)
MM16	JM16	SS-MMA-MM16-JM16	3.19 (81.0)	1.50 (38.1)	0.56 (14.3)	15000 (1034)

Male Medium Pressure to Male Type "M"

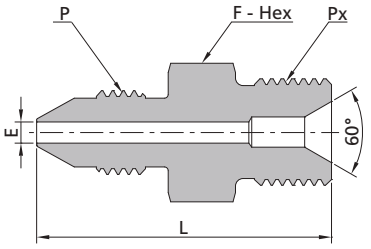

Male Medium Pressure						Male Type "M"
P-Connection	Px-Connection	Ordering Number	Dimensions, in. (mm)			Working Pressure psig (bar)
			L	F	E	
MM4	TM9	SS-MMA-MM4-TM9	1.52 (38.7)	0.63 (15.9)	0.09 (2.4)	20000 (1379)
MM4	TM12	SS-MMA-MM4-TM12	1.69 (43.0)	0.75 (19.1)	0.11 (2.8)	20000 (1379)
MM4	TM14	SS-MMA-MM4-TM14	1.90 (48.2)	1.00 (25.4)	0.11 (2.8)	20000 (1379)
MM4	TM16	SS-MMA-MM4-TM16	1.78 (45.3)	1.00 (25.4)	0.11 (2.8)	20000 (1379)
MM4	TM21	SS-MMA-MM4-TM21	1.90 (48.3)	1.37 (34.9)	0.11 (2.8)	20000 (1379)
MM6	TM9	SS-MMA-MM6-TM9	1.67 (42.4)	0.63 (15.9)	0.09 (2.4)	20000 (1379)
MM6	TM12	SS-MMA-MM6-TM12	1.84 (46.7)	0.75 (19.1)	0.20 (5.2)	20000 (1379)
MM6	TM14	SS-MMA-MM6-TM14	2.04 (51.9)	1.00 (25.4)	0.15 (3.8)	20000 (1379)
MM6	TM16	SS-MMA-MM6-TM16	1.93 (49.0)	1.00 (25.4)	0.20 (5.2)	20000 (1379)
MM6	TM21	SS-MMA-MM6-TM21	2.05 (52.0)	1.37 (34.9)	0.20 (5.2)	20000 (1379)
MM9	TM9	SS-MMA-MM9-TM9	1.95 (49.6)	0.94 (23.8)	0.09 (2.4)	20000 (1379)
MM9	TM12	SS-MMA-MM9-TM12	2.08 (52.9)	0.94 (23.8)	0.29 (7.4)	20000 (1379)
MM9	TM14	SS-MMA-MM9-TM14	2.23 (56.7)	1.00 (25.4)	0.15 (3.8)	20000 (1379)
MM9	TM16	SS-MMA-MM9-TM16	2.12 (53.8)	1.00 (25.4)	0.31 (7.9)	20000 (1379)
MM9	TM21	SS-MMA-MM9-TM21	2.24 (56.8)	1.37 (34.9)	0.31 (7.9)	20000 (1379)
MM12	TM9	SS-MMA-MM12-TM9	2.22 (56.3)	1.19 (30.2)	0.09 (2.4)	20000 (1379)
MM12	TM12	SS-MMA-MM12-TM12	2.35 (59.6)	1.19 (30.2)	0.29 (7.4)	20000 (1379)
MM12	TM14	SS-MMA-MM12-TM14	2.47 (62.8)	1.19 (30.2)	0.15 (3.8)	20000 (1379)
MM12	TM16	SS-MMA-MM12-TM16	2.36 (59.9)	1.19 (30.2)	0.39 (10.0)	20000 (1379)
MM12	TM21	SS-MMA-MM12-TM21	2.41 (61.1)	1.37 (34.9)	0.44 (11.1)	20000 (1379)
MM16	TM9	SS-MMA-MM16-TM9	2.77 (70.3)	1.50 (38.1)	0.09 (2.4)	20000 (1379)
MM16	TM12	SS-MMA-MM16-TM12	2.90 (73.6)	1.50 (38.1)	0.29 (7.4)	20000 (1379)
MM16	TM14	SS-MMA-MM16-TM14	3.02 (76.8)	1.50 (38.1)	0.15 (3.8)	20000 (1379)
MM16	TM16	SS-MMA-MM16-TM16	2.91 (73.9)	1.50 (38.1)	0.39 (10.0)	20000 (1379)
MM16	TM21	SS-MMA-MM16-TM21	2.89 (73.3)	1.50 (38.1)	0.56 (14.3)	20000 (1379)

Male Medium Pressure to Male ISO Parallel

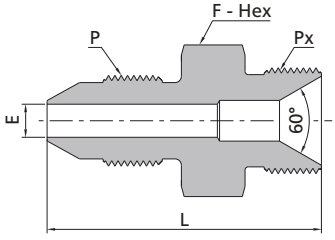

Male Medium Pressure						Male ISO Parallel
P-Connection	Px-Connection	Ordering Number	Dimensions, in. (mm)			Working Pressure psig (bar)
			L	F	E	
MM4	HBP4	SS-MMA-MM4-HBP4	1.46 (37.0)	0.63 (15.9)	0.11 (2.8)	20000 (1379)
MM4	HBP6	SS-MMA-MM4-HBP6	1.55 (39.4)	0.81 (20.6)	0.11 (2.8)	20000 (1379)
MM4	HBP8	SS-MMA-MM4-HBP8	1.69 (42.9)	1.00 (25.4)	0.11 (2.8)	20000 (1379)
MM6	HBP4	SS-MMA-MM6-HBP4	1.60 (40.7)	0.63 (15.9)	0.15 (3.8)	20000 (1379)
MM6	HBP6	SS-MMA-MM6-HBP6	1.70 (43.1)	0.81 (20.6)	0.20 (5.2)	20000 (1379)
MM6	HBP8	SS-MMA-MM6-HBP8	1.78 (45.2)	1.00 (25.4)	0.20 (5.2)	20000 (1379)
MM9	HBP4	SS-MMA-MM9-HBP4	1.89 (47.9)	0.94 (23.8)	0.15 (3.8)	20000 (1379)
MM9	HBP6	SS-MMA-MM9-HBP6	1.93 (48.9)	0.94 (23.8)	0.25 (6.4)	20000 (1379)
MM9	HBP8	SS-MMA-MM9-HBP8	2.02 (51.4)	1.00 (25.4)	0.31 (7.9)	20000 (1379)
MM12	HBP8	SS-MMA-MM12-HBP8	2.30 (58.5)	1.19 (30.2)	0.37 (9.5)	20000 (1379)
MM12	HBP12	SS-MMA-MM12-HBP12	2.39 (60.7)	1.25 (31.8)	0.44 (11.1)	20000 (1379)
MM16	HBP8	SS-MMA-MM16-HBP8	2.81 (71.5)	1.50 (38.1)	0.37 (9.5)	20000 (1379)
MM16	HBP12	SS-MMA-MM16-HBP12	2.89 (73.5)	1.50 (38.1)	0.50 (12.7)	20000 (1379)
MM16	HBP16	SS-MMA-MM16-HBP16	3.01 (76.5)	1.50 (38.1)	0.56 (14.3)	20000 (1379)

Male 20D Series to Male 20D Series

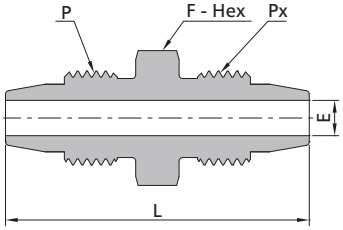

Male 20D Series						Male 20D Series
P-Connection	Px-Connection	Ordering Number	Dimensions, in. (mm)			Working Pressure psig (bar)
			L	F	E	
DFM2	DFM2	SS-MMA-DFM2	1.60 (40.6)	0.50 (12.7)	0.09 (2.4)	20000 (1379)
DFM4	DFM2	SS-MMA-DFM4-DFM2	1.79 (45.5)	0.63 (15.9)	0.09 (2.4)	20000 (1379)
DFM4	DFM4	SS-MMA-DFM4	1.94 (49.4)	0.63 (15.9)	0.19 (4.8)	20000 (1379)
DFM6	DFM2	SS-MMA-DFM6-DFM2	1.85 (46.9)	0.75 (19.1)	0.09 (2.4)	20000 (1379)
DFM6	DFM4	SS-MMA-DFM6-DFM4	2.00 (50.8)	0.75 (19.1)	0.19 (4.8)	20000 (1379)
DFM6	DFM6	SS-MMA-DFM6	2.02 (51.2)	0.75 (19.1)	0.25 (6.4)	20000 (1379)
DFM8	DFM2	SS-MMA-DFM8-DFM2	2.06 (52.2)	0.94 (23.8)	0.09 (2.4)	20000 (1379)
DFM8	DFM4	SS-MMA-DFM8-DFM4	2.21 (56.1)	0.94 (23.8)	0.19 (4.8)	20000 (1379)
DFM8	DFM6	SS-MMA-DFM8- DFM6	2.22 (56.5)	0.94 (23.8)	0.25 (6.4)	20000 (1379)
DFM8	DFM8	SS-MMA-DFM8	2.35 (59.8)	0.94 (23.8)	0.37 (9.5)	20000 (1379)

FITOK

Male 20D Series to Male NPT

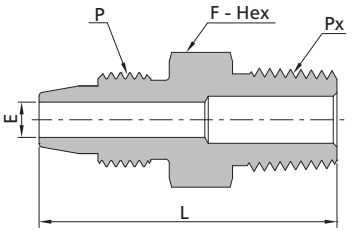

Male 20D Series						Male NPT
P-Connection	Px-Connection	Ordering Number	Dimensions, in. (mm)			Working Pressure psig (bar)
			L	F	E	
DFM2	NS2	SS-MMA-DFM2-NS2	1.32 (33.5)	0.50 (12.7)	0.09 (2.4)	15000 (1034)
DFM2	NS4	SS-MMA-DFM2-NS4	1.52 (38.5)	0.56 (14.3)	0.09 (2.4)	15000 (1034)
DFM2	NS6	SS-MMA-DFM2-NS6	1.56 (39.5)	0.69 (17.5)	0.09 (2.4)	15000 (1034)
DFM2	NS8	SS-MMA-DFM2-NS8	1.82 (46.4)	0.87 (22.2)	0.09 (2.4)	15000 (1034)
DFM2	NS12	SS-MMA-DFM2-NS12	1.90 (48.4)	1.06 (27.0)	0.09 (2.4)	10000 (690)
DFM2	NS16	SS-MMA-DFM2-NS16	2.19 (55.7)	1.37 (34.9)	0.09 (2.4)	10000 (690)
DFM4	NS2	SS-MMA-DFM4-NS2	1.51 (38.4)	0.63 (15.9)	0.19 (4.8)	15000 (1034)
DFM4	NS4	SS-MMA-DFM4-NS4	1.69 (42.9)	0.63 (15.9)	0.19 (4.8)	15000 (1034)
DFM4	NS6	SS-MMA-DFM4-NS6	1.71 (43.4)	0.69 (17.5)	0.19 (4.8)	15000 (1034)
DFM4	NS8	SS-MMA-DFM4-NS8	1.98 (50.3)	0.87 (22.2)	0.19 (4.8)	15000 (1034)
DFM4	NS12	SS-MMA-DFM4-NS12	2.06 (52.3)	1.06 (27.0)	0.19 (4.8)	10000 (690)
DFM4	NS16	SS-MMA-DFM4-NS16	2.35 (59.6)	1.37 (34.9)	0.19 (4.8)	10000 (690)
DFM6	NS2	SS-MMA-DFM6-NS2	1.57(39.8)	0.75 (19.1)	0.19 (4.8)	15000 (1034)
DFM6	NS4	SS-MMA-DFM6-NS4	1.74 (44.3)	0.75 (19.1)	0.25 (6.4)	15000 (1034)
DFM6	NS6	SS-MMA-DFM6-NS6	1.74 (44.3)	0.75 (19.1)	0.25 (6.4)	15000 (1034)
DFM6	NS8	SS-MMA-DFM6-NS8	1.99 (50.7)	0.87 (22.2)	0.25 (6.4)	15000 (1034)
DFM6	NS12	SS-MMA-DFM6-NS12	2.07 (52.7)	1.06 (27.0)	0.25 (6.4)	10000 (690)
DFM6	NS16	SS-MMA-DFM6-NS16	2.36 (60.0)	1.37 (34.9)	0.25 (6.4)	10000 (690)
DFM8	NS2	SS-MMA-DFM8-NS2	1.78 (45.1)	0.94 (23.8)	0.19 (4.8)	15000 (1034)
DFM8	NS4	SS-MMA-DFM8-NS4	1.95 (49.6)	0.94 (23.8)	0.25 (6.4)	15000 (1034)
DFM8	NS6	SS-MMA-DFM8-NS6	1.95 (49.6)	0.94 (23.8)	0.31 (7.9)	15000 (1034)
DFM8	NS8	SS-MMA-DFM8-NS8	2.14 (54.5)	0.94 (23.8)	0.37 (9.5)	15000 (1034)
DFM8	NS12	SS-MMA-DFM8-NS12	2.20 (56.0)	1.06 (27.0)	0.37 (9.5)	10000 (690)
DFM8	NS16	SS-MMA-DFM8-NS16	2.49 (63.3)	1.37 (34.9)	0.37 (9.5)	10000 (690)

Male 20D Series to Male JIC

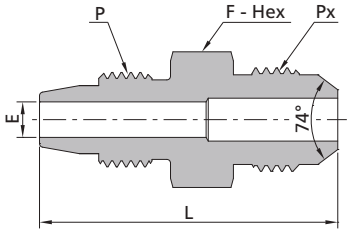

Male 20D Series						Male JIC
P-Connection	Px-Connection	Ordering Number	Dimensions, in. (mm)			Working Pressure psig (bar)
			L	F	E	
DFM2	JM4	SS-MMA-DFM2-JM4	1.49 (37.8)	0.50 (12.7)	0.09 (2.4)	20000 (1379)
DFM2	JM6	SS-MMA-DFM2-JM6	1.53 (38.9)	0.63 (15.9)	0.09 (2.4)	20000 (1379)
DFM2	JM8	SS-MMA-DFM2-JM8	1.71 (43.5)	0.81 (20.6)	0.09 (2.4)	20000 (1379)
DFM2	JM10	SS-MMA-DFM2-JM10	1.85 (47.1)	0.94 (23.8)	0.09 (2.4)	20000 (1379)
DFM2	JM12	SS-MMA-DFM2-JM12	2.04 (51.7)	1.13 (28.6)	0.09 (2.4)	15000 (1034)
DFM2	JM16	SS-MMA-DFM2-JM16	2.16 (54.9)	1.37 (34.9)	0.09 (2.4)	15000 (1034)
DFM4	JM4	SS-MMA-DFM4-JM4	1.68 (42.7)	0.63 (15.9)	0.17 (4.4)	20000 (1379)
DFM4	JM6	SS-MMA-DFM4-JM6	1.69 (42.8)	0.63 (15.9)	0.19 (4.8)	20000 (1379)
DFM4	JM8	SS-MMA-DFM4-JM8	1.87 (47.4)	0.81 (20.6)	0.19 (4.8)	20000 (1379)
DFM4	JM10	SS-MMA-DFM4-JM10	2.01 (51.0)	0.94 (23.8)	0.19 (4.8)	20000 (1379)
DFM4	JM12	SS-MMA-DFM4-JM12	2.19 (55.6)	1.13 (28.6)	0.19 (4.8)	15000 (1034)
DFM4	JM16	SS-MMA-DFM4-JM16	2.31 (58.8)	1.37 (34.9)	0.19 (4.8)	15000 (1034)
DFM6	JM4	SS-MMA-DFM6-JM4	1.74 (44.1)	0.75 (19.1)	0.17 (4.4)	20000 (1379)
DFM6	JM6	SS-MMA-DFM6-JM6	1.74 (44.2)	0.75 (19.1)	0.23 (5.8)	20000 (1379)
DFM6	JM8	SS-MMA-DFM6-JM8	1.88 (47.8)	0.81 (20.6)	0.25 (6.4)	20000 (1379)
DFM6	JM10	SS-MMA-DFM6-JM10	2.02 (51.4)	0.94 (23.8)	0.25 (6.4)	20000 (1379)
DFM6	JM12	SS-MMA-DFM6-JM12	2.20(56.0)	1.13 (28.6)	0.25 (6.4)	15000 (1034)
DFM6	JM16	SS-MMA-DFM6-JM16	2.33(59.2)	1.37 (34.9)	0.25 (6.4)	15000 (1034)
DFM8	JM4	SS-MMA-DFM8-JM4	1.94 (49.4)	0.94 (23.8)	0.17 (4.4)	20000 (1379)
DFM8	JM6	SS-MMA-DFM8-JM6	1.95 (49.5)	0.94 (23.8)	0.23 (5.8)	20000 (1379)
DFM8	JM8	SS-MMA-DFM8-JM8	2.05 (52.1)	0.94 (23.8)	0.31 (8.0)	20000 (1379)
DFM8	JM10	SS-MMA-DFM8-JM10	2.15(54.7)	0.94 (23.8)	0.37 (9.4)	20000 (1379)
DFM8	JM12	SS-MMA-DFM8-JM12	2.33 (59.3)	1.13 (28.6)	0.37 (9.5)	15000 (1034)
DFM8	JM16	SS-MMA-DFM8-JM16	2.46 (62.5)	1.37 (34.9)	0.37 (9.5)	15000 (1034)

FITOK

Male 20D Series to Male Type "M"

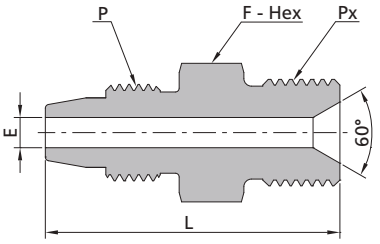

Male 20D Series						Male Type "M"
P-Connection	Px-Connection	Ordering Number	Dimensions, in. (mm)			Working Pressure psig (bar)
			L	F	E	
DFM2	TM9	SS-MMA-DFM2-TM9	1.48(37.5)	0.63 (15.9)	0.09 (2.4)	20000 (1379)
DFM2	TM12	SS-MMA-DFM2-TM12	1.65(41.8)	0.75 (19.1)	0.09 (2.4)	20000 (1379)
DFM2	TM14	SS-MMA-DFM2-TM14	1.87(47.5)	1.00 (25.4)	0.09 (2.4)	20000 (1379)
DFM2	TM16	SS-MMA-DFM2-TM16	1.76(44.6)	1.00 (25.4)	0.09 (2.4)	20000 (1379)
DFM2	TM21	SS-MMA-DFM2-TM21	1.87(47.5)	1.37 (34.9)	0.09 (2.4)	20000 (1379)
DFM4	TM9	SS-MMA-DFM4-TM9	1.63(41.4)	0.63 (15.9)	0.09 (2.4)	20000 (1379)
DFM4	TM12	SS-MMA-DFM4-TM12	1.80(45.7)	0.75 (19.1)	0.19 (4.8)	20000 (1379)
DFM4	TM14	SS-MMA-DFM4-TM14	2.02(51.4)	1.00 (25.4)	0.15 (3.8)	20000 (1379)
DFM4	TM16	SS-MMA-DFM4-TM16	1.91(48.5)	1.00 (25.4)	0.19 (4.8)	20000 (1379)
DFM4	TM21	SS-MMA-DFM4-TM21	2.02(51.4)	1.37 (34.9)	0.19 (4.8)	20000 (1379)
DFM6	TM9	SS-MMA-DFM6-TM9	1.69(42.8)	0.75 (19.1)	0.09 (2.4)	20000 (1379)
DFM6	TM12	SS-MMA-DFM6-TM12	1.81(46.1)	0.75 (19.1)	0.25 (6.4)	20000 (1379)
DFM6	TM14	SS-MMA-DFM6-TM14	2.04(51.8)	1.00 (25.4)	0.15 (3.8)	20000 (1379)
DFM6	TM16	SS-MMA-DFM6-TM16	1.93(48.9)	1.00 (25.4)	0.25 (6.4)	20000 (1379)
DFM6	TM21	SS-MMA-DFM6-TM21	2.04(51.8)	1.37 (34.9)	0.25 (6.4)	20000 (1379)
DFM8	TM9	SS-MMA-DFM8-TM9	1.89(48.1)	0.94 (23.8)	0.09 (2.4)	20000 (1379)
DFM8	TM12	SS-MMA-DFM8-TM12	2.02(51.4)	0.94 (23.8)	0.29 (7.4)	20000 (1379)
DFM8	TM14	SS-MMA-DFM8-TM14	2.17(55.1)	1.00 (25.4)	0.15 (3.8)	20000 (1379)
DFM8	TM16	SS-MMA-DFM8-TM16	2.06(52.2)	1.00 (25.4)	0.37 (9.5)	20000 (1379)
DFM8	TM21	SS-MMA-DFM8-TM21	2.17(55.1)	1.37 (34.9)	0.37 (9.5)	20000 (1379)

Ordering Number Description

SS – FMA – HF6 – MM9

Material	Fitting Type	P1 Type	P1 Size	P2 Type	P2 Size
SS: 316 SS	FFC: Female to Female FMA: Female to Male MMA: Male to Male	HF: Female High Pressure MF: Female Medium Pressure DFF: Female 20D Series FNS: Female NPT JF: Female JIC SBP: Female ISO Parallel HM: Male High Pressure HCT: T60H Series Coned and Threaded Nipples MM: Male Medium Pressure MCT: Medium Pressure Coned and Threaded Nipples DFM: Male 20D Series NS: Male NPT JM: Male JIC TM: Male Type "M" HBP: Male ISO Parallel	TM Thread Sizes 9: 9/16-18 12: 3/4-16 14: 7/8-14 16: 1-12 21: 1 5/16-12 Other Sizes 2: 1/8" 4: 1/4" 6: 3/8" 8: 1/2" 9: 9/16" 10: 5/8" 12: 3/4" 16: 1"	Specified in the same way as the P1	Specified in the same way as the P1

Notes: 1. For more details regarding 20D Series and Medium/High Pressure connections, please see **Connection Information** on A-02.

2. "Ordering Number Description" is a reference to understand the combination rules of FITOK product part number. Not all combinations are available.

P1 P2

P1 and P2 shall be described in the following orders:

◎ Describe the female end first if there is any

◎ For female connections: HF□ - MF□ - DFF□ - FNS□ - JF□ - SBP□

◎ For male connections: HM□ - HCT□ - MM□ - MCT□ - DFM□ - NS□- JM□- TM□ - HBP□

◎ Describe in descending order according to sizes if the end connection types are the same

◎ Describe the end of P1 if all end connections are the same

"Two-piece" Design

Ordering number with designator "HCP", "MCP" and "DCP" are for "two-piece" male to male and female to male adapter fittings. They are identical to the "one-piece" design in length. They can be ordered by using "HCP", "MCP"and "DCP" to take the place of "HM", "MM" and "DFM".

For example: Ordering number of "one-piece": SS-MMA-HM6-DFM4

The corresponding ordering number of "Two-piece": SS-MMA-HCP6-DCP4.

Tools and Installation Instructions



Tools

Manual Presetting Tools

To preset double ferrules onto T15A or T20D series tubing.
Tubing sizes available in 1/8", 1/4", 3/8" and 1/2" O.D.



Ordering Number	Tube O.D., in.
PST-2D	1/8
PST-4D	1/4
PST-6D	3/8
PST-8D	1/2

Hydraulic Presetting Tools

To preset double ferrules onto T15A or T20D series tubing.
Tubing sizes available in 1/2", 9/16", 3/4" and 1" O.D.



Ordering Number	Description
HPT-DF	With full set of die heads
HPT-N	Without die heads The die heads can be ordered individually.

Die Heads



Die Heads

Ordering Number	Tube O.D., in.
HPT-DFF8	1/2
HPT-DFF9	9/16
HPT-DFF12	3/4
HPT-DFF16	1

Manual Coning Tools

Applied in T20M and T60H series tubing for concentric cone processing. All the manual coning tools use the same basic tools on which the cutter heads and the collets of different sizes can be replaced. A complete ordering number shall include that of the basic tool, collet and cutter head. The collet and the cutter head can be ordered separately. For detailed information, please refer to the relevant instruction manual or contact FITOK Group.





Cutter Head



Collet

Connection	Tube O.D. x I.D. in.	Complete Ordering Number of Tool	Ordering Number of Collet	Ordering Number of Cutter Head
MF4	1/4 × 0.109	HCT-M4	HCT-4-CO	HCT-M4-DT
MF6	3/8 × 0.203	HCT-M6	HCT-6-CO	HCT-M6-DT
MF9	9/16 × 0.312	HCT-M9	HCT-9-CO	HCT-M9-DT
HF4	1/4 × 0.083	HCT-H4	HCT-4-CO	HCT-H4-DT
HF6	3/8 × 0.125	HCT-H6	HCT-6-CO	HCT-H6-DT
HF9	9/16 × 0.188	HCT-H9	HCT-9-CO	HCT-H9-DT

Manual Threading Tools

Applied in T20M and T60H series tubing for thread processing. All the manual threading tools use the same basic tools to process threads by replacing threading dies and guide bushings of different sizes. A complete ordering number shall include that of the basic tool, threading die and guide bushing. The threading die and the guide bushing can be ordered separately. For detailed information, please refer to the instruction manual or contact FITOK Group.



Threading Die Bushing

Connection	Tube O.D. x I.D. in.	Thread Size (Left Hand)	Complete Ordering Number of Tool	Ordering Number of Threading Die	Ordering Number of Bushing
MF4	1/4 × 0.109	1/4-28 UNF	HTT-4	HTT-4-D	HTT-4-GS
MF6	3/8 × 0.203	3/8-24 UNF	HTT-6	HTT-6-D	HTT-6-GS
MF9	9/16 × 0.312	9/16-18 UNF	HTT-9	HTT-9-D	HTT-9-GS
HF4	1/4 × 0.083	1/4-28 UNF	HTT-4	HTT-4-D	HTT-4-GS
HF6	3/8 × 0.125	3/8-24 UNF	HTT-6	HTT-6-D	HTT-6-GS
HF9	9/16 × 0.188	9/16-18 UNF	HTT-9	HTT-9-D	HTT-9-GS

Manual Reseating Tools

The tool is used for repairing the wearing cone seat of medium and high pressure fittings or valves. A complete ordering number shall include that of the cutter, antifriction gasket, orientation nut and handle. The cutter, antifriction gasket, orientation nut and handle can be ordered separately. For detailed information, please refer to the instruction manual or contact FITOK Group.



Connection	Complete Ordering Number of Tool	Ordering Number of Cutter	Ordering Number of Antifriction Gasket	Ordering Number of Orientation Nut	Ordering Number of Handle
MF4	HRT-M4	HRT-4-C	HRT-4-G	HRT-M4-G	HRT-H-1
MF6	HRT-M6	HRT-6-C	HRT-6-G	HRT-M6-G	HRT-H-2
MF9	HRT-M9	HRT-9-C	HRT-9-G	HRT-M9-G	HRT-H-3
MF12	HRT-M12	HRT-12-C	HRT-12-G	HRT-M12-G	HRT-H-4
MF16	HRT-M16	HRT-16-C	HRT-16-G	HRT-M16-G	HRT-H-4
HF4	HRT-H4	HRT-4-C	HRT-4-G	HRT-H4-G	HRT-H-1
HF6	HRT-H6	HRT-4-C	HRT-4-G	HRT-H6-G	HRT-H-1
HF9	HRT-H9	HRT-9-C	HRT-9-G	HRT-H9-G	HRT-H-3

Installation Instructions

Installation of 20D Series Connections

For Tube O.D. 1/8", 1/4", 3/8" and 1/2"

Without Manual Presetting Tool

1. Put the nut and ferrules onto the tubing in fixed sequence and orientation (Fig. 1).
2. Insert the tubing into the fitting body or the valve. Finger tight the nut. Make sure that the tubing rests firmly on the shoulder of the fitting body or the valve (Fig. 2).
3. Mark the nut and the fitting body or the valve (Fig. 3).
4. Hold the fitting body or the valve steady. Refer to Table 1 to tighten the nut with a wrench to the specified number of turns, noting that the number of turns varies for different types of tubing (Fig. 4).

Table 1

Tube Type/Specification	T15A/T20D Tubing	T20M Tubing
1/8"	1 1/4 turns	/
1/4"	1 1/2 turns	1 3/4 turns
3/8"	1 1/2 turns	1 1/2 turns
1/2"	1 1/2 turns	/

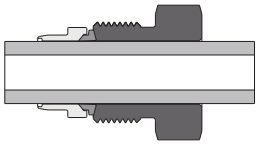

Fig.1

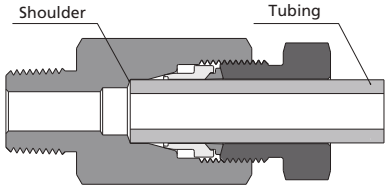

Fig.2

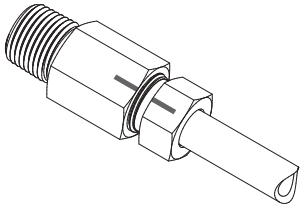

Fig.3

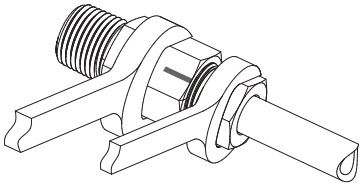

Fig.4

With Manual Presetting Tool

1. Put the nut and ferrules onto the tubing in fixed sequence and orientation (Fig. 1).
2. Insert the tubing into the manual presetting tool. Finger tight the nut. Make sure that the tubing rests firmly on the shoulder of the presetting tool (Fig. 5).
3. Mark the nut and the manual presetting tool (Fig. 6).
4. Hold the manual presetting tool steady. Refer to Table 1 to tighten the nut with a wrench to the specified number of turns, noting that the number of turns varies for different types of tubing (Fig. 4).
5. Loosen the nut and remove the tubing with preassembled ferrules from the manual presetting tool (Fig. 7).
   Note: If the tubing sticks into the manual presetting tool, remove the tubing by gently rocking it back and forth. Do not rotate the tubing.
6. Insert the tubing with preassembled ferrules into the fitting body or the valve. Finger tight the nut (Fig. 8).
7. Tighten the nut 1/4 turn with a wrench while holding the fitting body or the valve steady.

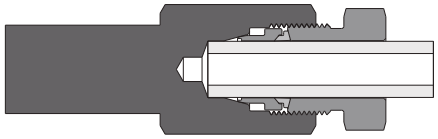

Fig.5

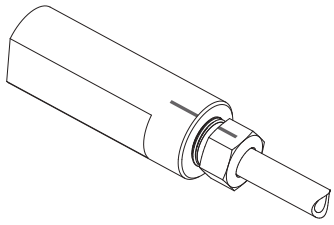

Fig.6

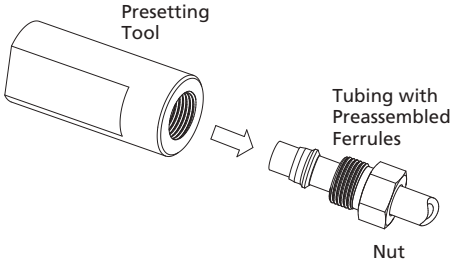

Fig.7

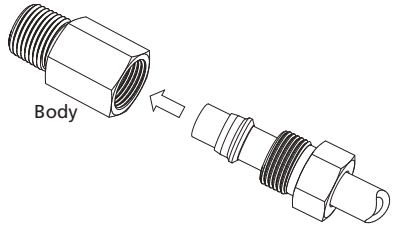

Fig.8

For Tube O.D. 1/2", 9/16", 3/4" and 1"

1. Preassemble the ferrules onto tubing using the hydraulic presetting tool. For details, please contact FITOK for instruction manual Hydraulic Presetting Tools.
2. Insert the tubing with preassembled ferrules into the fitting body or the valve. Finger tight the nut.
3. While holding the fitting body or the valve steady, tighten the nut 1/4 turn for tubing O.D. 1/2", 9/16" and 3/4" and 1/2 turn for tubing O.D. 1" with a wrench.

Reinstallation Instructions

1. Insert the tubing with preassembled ferrules into the fitting body or the valve.
2. While holding the fitting body or the valve steady, for tubing O.D. 1", tighten the nut to the previous assembly position and further tighten it with a wrench; for other dimension tubing, tighten the nut 1/4 turn with a wrench for the initial reinstallation, and for reinstallations thereafter, tighten the nut to the previous assembly position and further tighten it with a wrench.

For Plugs

1. Insert the plug into the fitting body or the valve.
2. For initial installation, finger tight the nut, further wrench tighten 1/2 turn while holding the fitting body or the valve body steady. For reinstallations thereafter, starting from the final tightened position in the previous assembly, further wrench tighten as may be necessary.

Cautions

1. Tube end includes tubing, ferrules and ferrule nut.
2. Do not loosen or tighten fittings when the system is pressurized.
3. When assembling a tube fitting, screw the nut while holding the body steady.

Installation of Medium & High Pressure Coned and Threaded Connections

1. Cut off tubing to desired length and deburr ends.
Note: When cutting tubing with abrasive cutting off wheel, tubing should not be over heated effecting material properties.
Tips: The housing assemblies of manual coning tool can be used to clamp the tubing.
Suitable manual reseating tool can help to deburr ends.

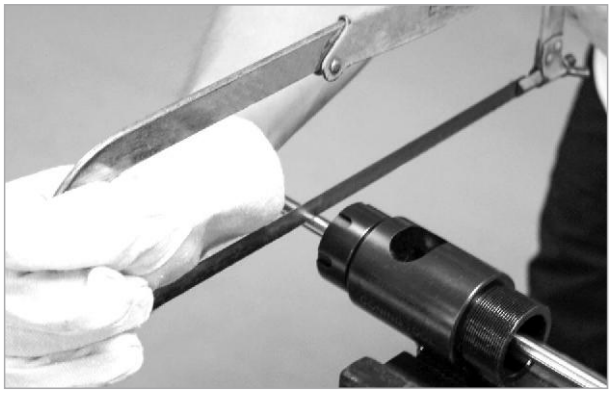

The length L can be calculated by this way:

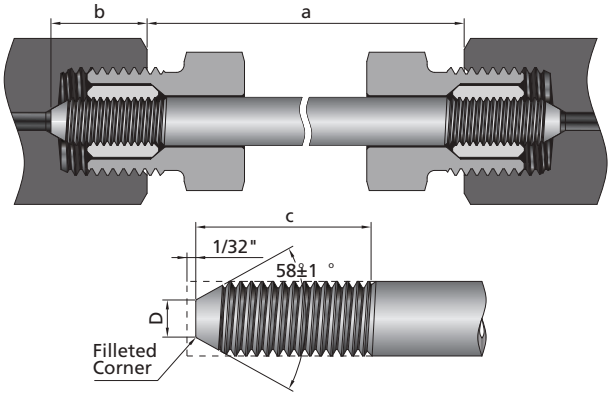

Fig.1

L=a+2b+2×1/32"
L: Tubing length
a: Component distance
b: Tubing engagement (please see the table below)
1/32": Standard face distance per tubing

Rated Pressure psig (bar)	Connection Type	Tube O.D. x I.D. in.	b in. (mm)
20000 (1379)	MF4	1/4 × 0.109	0.55(13.97)
	MF6	3/8 × 0.203	0.69(17.53)
	MF9	9/16 × 0.312	0.84(21.34)
60000 (4137)	HF4	1/4 × 0.083	0.50(12.70)
	HF6	3/8 × 0.125	0.69(17.53)
	HF9	9/16 × 0.188	0.84(21.34)

2. Process the tube end into the structure as shown on the right. For dimensions please see the table below.

Tips: For 1/4", 3/8" and 9/16" O.D. tubing, manual coning and threading tools can be used to make coned and threaded nipples.

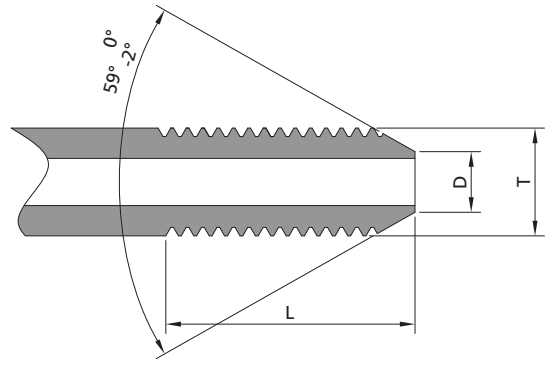

Tube O.D. x I.D. in.	Connection	T - Thread Size (Left Hand)	D in. (mm)	L in. (mm)
1/4 × 0.109	MF4	1/4-28 UNF	0.14 (3.6)	0.34 (8.7)
3/8 × 0.203	MF6	3/8-24 UNF	0.25 (6.4)	0.44 (11.1)
9/16 × 0.312	MF9	9/16-18 UNF	0.41 (10.3)	0.50 (12.7)
3/4 × 0.438	MF12	3/4-16 UNF	0.56 (14.3)	0.63 (15.9)
1 × 0.562	MF16	1-14 UNS	0.72 (18.3)	0.78 (19.8)
1 1/2 × 0.937	MF24	1 1/2-12 UNF	1.06 (27.0)	1.00 (25.4)
1/4 × 0.083	HF4	1/4-28 UNF	0.13 (3.2)	0.56 (14.3)
3/8 × 0.125	HF6	3/8-24 UNF	0.22 (5.6)	0.75 (19.1)
9/16 × 0.188	HF9	9/16-18 UNF	0.28 (7.1)	0.94 (23.8)

3. First, insert the tube through the gland, and then screw in the collar counterclockwise (left-hand threads) until the conical end of the tube showing 1-2 full threads.
4. Apply thread lubricant evenly on the gland threads, and if possible, coat the cone tip with a small amount of lubricant which is compatible with the system media.

Medium Pressure **High Pressure**

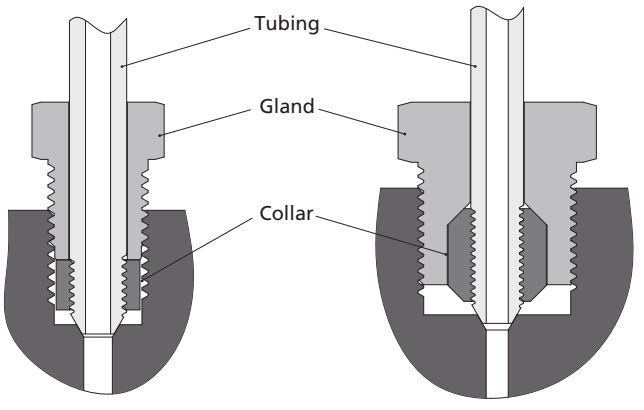

5. Insert the tubing into the connecting port and finger tighten the gland.
6. Use a torque wrench to tighten the gland with the required torque shown in the table below while holding fitting body or valve steady.

Note: The installation torque may vary depending on the type of grease used.

Tube O.D. x I.D. in.	Connection	Required Torque for Standard Service Products ft.-lbs. (N·m)①	Required Torque for Sour Service Products ft.-lbs. (N·m)①
1/4 × 0.109	MF4	20 (27.1)	10 (13.6)
3/8 × 0.203	MF6	30 (40.6)	15 (20.3)
9/16 × 0.312	MF9	55 (74.5)	30 (40.7)
3/4 × 0.438	MF12	90 (122)	45 (61.0)
1 × 0.562	MF16	125 (170)	100 (135.6)
1 1/2 × 0.937	MF24	200 (270)	/
1/4 × 0.083	HF4	25 (33.9)	15 (20.3)
3/8 × 0.125	HF6	50 (67.8)	25 (33.9)
9/16 × 0.188	HF9	110 (149.1)	55 (74.6)

Installation of Medium & High Pressure Anti-Vibration Gland Assembly

Anti-Vibration Gland Assembly replaces the standard gland.

1. Insert coned and threaded tubing through the Anti-Vibration Gland Assembly in the correct order as shown in the following figure, and then screw in the collar until the conical end of the tube showing 1-2 full threads.
2. For 20M series medium pressure Anti-Vibration Gland Assembly, tighten collet body to required torque for standard fittings while holding fitting body or valve steady. Then finger tighten the gland nut, and tighten the gland nut 1-1/4 turns for initial installation with a wrench while holding the collet body steady. For reinstallation, tighten the gland nut with a wrench from finger tight to 3/4 turn.
3. For 60H series high pressure Anti-Vibration Gland Assembly, use a torque wrench to tighten the gland nut with the required torque shown in the table below while holding fitting body or valve steady.

Tube O.D. x I.D. in.	Connection	Required Torque ft.-lbs. (N·m)
1/4 × 0.083	HF4	10 (13.6)
3/8 × 0.125	HF6	28 (38.0)
9/16 × 0.188	HF9	75 (101.7)

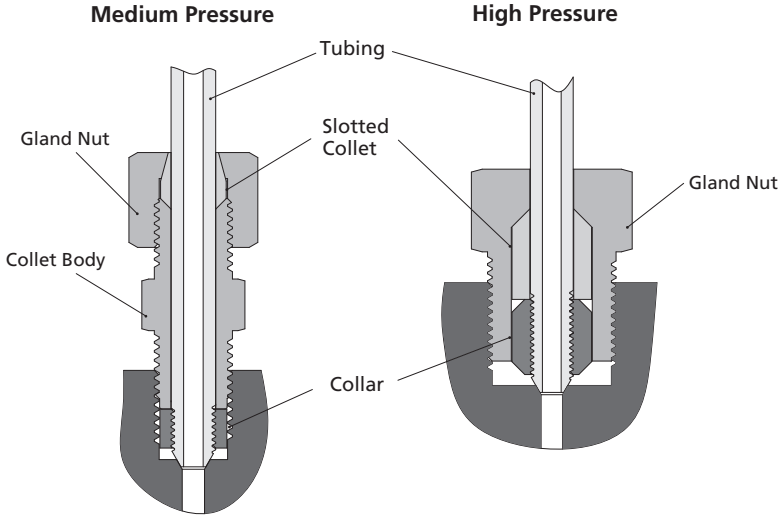

Note: When installing, please follow the given method and required torque ; otherwise it will affect the performance of the product.

Tubing

T15A Series Tubing 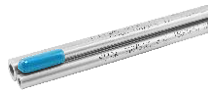 B-05

T20D Series Tubing 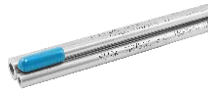 B-07

T20M Series Tubing  B-09

T60H Series Tubing  B-12

Tubing

T15A, T20D, T20M and T60H Series



Contents

Connections

B-04

T15A Series Tubing

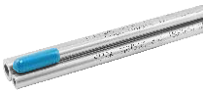

B-05

T20D Series Tubing

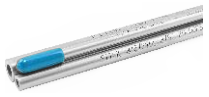

B-07

T20M Series Tubing



B-09

T60H Series Tubing



B-12

Connections

√ Recommended application
○ Applicable but not optimal
□ Limited application subject to confirmation from FITOK
× Not applicable

Connection \ Series	T15A	T20D	T20M	T60H
15S Series Single Ferrule Tube Fittings	√	×	×	×
20D Series Tube Fittings	√	√	○①	×
20M Series Medium Pressure Fittings	×	×	√	□
60H Series High Pressure Fittings	×	×	×	√

① Contact FITOK Group for installation methods of 20D series tube fittings with 20M series tubing.

T15A Series Tubing

Features



- ◎ Materials: 316/316L, enhanced-316/316L
- ◎ Working pressure up to 15,000 psig (1034 bar)
- ◎ Working temperature: -325°F to 1000°F (-198°C to 537°C)
- ◎ Supply conditions: annealed seamless tubing
- ◎ For use with FITOK 20D series tube fittings
- ◎ Marked with brand, material grade, specification, pressure, annealing designator and heat number
- ◎ Standard length: 40 in, 80 in, 10 ft, 20 ft, 1 m, 2 m, 3 m and 6 m
  Customized length as per customer requirement is also available

Materials

UNS	Grade	FITOK Designator	Composition %							
			C	Mn	P	S	Si	Cr	Ni	Mo
S31600/S31603	316/316L	SS	≤0.035	≤2.00	≤0.045	≤0.03	≤1.00	16-18	10-14	2.0-3.0
Enhanced-S31600/S31603	Enhanced-316/316L ①	SH	≤0.03					17-18	12-14	2.6-3.0

① Enhanced-316/316L complying with GB50516-2021 Technical Code for Hydrogen Fuelling Station is available, in which Ni_{eq} is not less than 28.5%. Contact FITOK Group for more information.

Mechanical Properties

UNS	Grade	Yield Strength ksi	Tensile Strength ksi	Elongation %	Hardness
S31600/S31603	316/316L	≥30	≥75	≥30	≤90 HRB
Enhanced-S31600/S31603	Enhanced-316/316L				

Dimensional Tolerance

Tube O.D. in.	O.D. Tolerance in.	Wall Thickness Tolerance %
1/8	+/-0.003	+/-10
1/4	+/-0.005	
3/8		
1/2		
3/4		
1		

Working Pressure at Ambient Temperature

Working pressures are calculated in accordance with ASME B31.3.

Tube O.D. in.	Wall Thickness in.	Working Pressure psig (bar)
1/8	0.037	15,000 (1,034)
1/4	0.083	15,000 (1,034)
	0.065	10,300 (710)
3/8	0.118	15,000 (1,034)
	0.095	10,000 (690)
1/2	0.156	15,000 (1,034)
	0.134	11,200 (772)
3/4	0.240	15,000 (1,034)
	0.188	10,000 (690)
1	0.220	10,000 (690)

Elevated Temperature Factors

Temperature		Factor
°F	°C	
100	38	1.00
200	93	
300	149	
400	204	0.96
500	260	0.89
600	316	0.85
700	371	0.81
800	427	0.79
1000	537	0.76

Ordering Information

Tube O.D. in.	Wall Thickness in.	Ordering Number ①②	
1/8	0.037	□□-T15A-2-037-6M	□□-T15A-2-037-20F
1/4	0.083	□□-T15A-4-083-6M	□□-T15A-4-083-20F
	0.065	□□-T15A-4-065-6M	□□-T15A-4-065-20F
3/8	0.118	□□-T15A-6-118-6M	□□-T15A-6-118-20F
	0.095	□□-T15A-6-095-6M	□□-T15A-6-095-20F
1/2	0.156	□□-T15A-8-156-6M	□□-T15A-8-156-20F
	0.134	□□-T15A-8-134-6M	□□-T15A-8-134-20F
3/4	0.240	□□-T15A-12-240-6M	□□-T15A-12-240-20F
	0.188	□□-T15A-12-188-6M	□□-T15A-12-188-20F
1	0.220	□□-T15A-16-220-6M	□□-T15A-16-220-20F

① In the ordering number, "6M"designator refers to 6 m tubing length and "20F" designator refers to 20 ft tubing length.
② To order, add the material designator as prefix: SS for 316/316L and SH for enhanced-316/316L.

T20D Series Tubing

Features

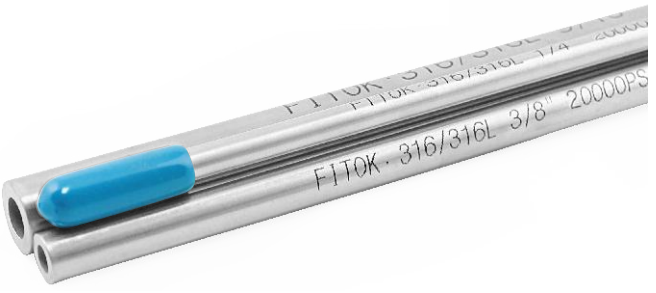

- ◎ Materials: 316/316L, enhanced-316/316L
- ◎ Working pressure up to 20,000 psig (1379 bar)
- ◎ Working temperature: -325°F to 800°F (-198°C to 427°C)
- ◎ Supply conditions: cold-drawn 1/8-hard seamless tubing
- ◎ For use with FITOK 20D series tube fittings
- ◎ Marked with brand, material grade, specification, pressure and heat number
- ◎ Standard length: 40 in, 80 in, 10 ft, 20 ft, 1 m, 2 m, 3 m and 6 m
  Customized length as per customer requirement is also available

Materials

UNS	Grade	FITOK Designator	Composition %							
			C	Mn	P	S	Si	Cr	Ni	Mo
S31600/S31603	316/316L	SS	≤0.035	≤2.00	≤0.045	≤0.03	≤1.00	16-18	10-14	2.0-3.0
Enhanced-S31600/S31603	Enhanced-316/316L ①	SH	≤0.03					17-18	12-14	2.6-3.0

① Enhanced-316/316L complying with GB50516-2021 Technical Code for Hydrogen Fuelling Station is available, in which Ni_{eq} is not less than 28.5%. Contact FITOK Group for more information.

Mechanical Properties

UNS	Grade	Yield Strength ksi	Tensile Strength ksi	Elongation %	Hardness
S31600/S31603	316/316L	75 to 110	105 to 140	≥25	≤26 HRC
Enhanced-S31600/S31603	Enhanced-316/316L				

Dimensional Tolerance

Tube O.D. in.	O.D. Tolerance in.	Wall Thickness Tolerance %
1/4	+/-0.005	+/-10
3/8		
1/2		
3/4		
1		

Working Pressure at Ambient Temperature

Working pressures are calculated in accordance with ASME B31.3 Chapter IX High Pressure Piping.

Tube O.D. in.	Wall Thickness in.	Working Pressure psig (bar)
1/4	0.065	20,000 (1,379)
3/8	0.083	
1/2	0.109	
3/4	0.165	
1	0.172	15,000 (1,034)

Elevated Temperature Factors

Temperature		Factor
°F	°C	
100	38	1.00
200	93	
300	149	
400	204	0.96
500	260	0.89
600	316	0.85
700	371	0.81
800	427	0.79

Ordering Information

Tube O.D. in.	Wall Thickness in.	Ordering Number ①②③	
1/4	0.065	□□-T20D-4-065-6M	□□-T20D-4-065-20F
3/8	0.083	□□-T20D-6-083-6M	□□-T20D-6-083-20F
1/2	0.109	□□-T20D-8-109-6M	□□-T20D-8-109-20F
3/4	0.165	□□-T20D-12-165-6M	□□-T20D-12-165-20F
1	0.172	□□-T20D-16-172-6M	□□-T20D-16-172-20F

① In the ordering number, "6M"designator refers to 6 m tubing length and "20F" designator refers to 20 ft tubing length.
② To order, add the material designator as prefix: SS for 316/316L and SH for enhanced-316/316L.
③ Cold-drawn 1/8-hard seamless tubing is not used with 15S series single-ferrule tube fittings.

T20M Series Tubing

Features

- ◎ Materials: 316/316L, enhanced-316/316L
- ◎ Working pressure up to 20,000 psig (1379 bar)
- ◎ Working temperature: -325°F to 800°F (-198°C to 427°C)
- ◎ Cold-drawn seamless tubing
- ◎ For use with FITOK 20M series medium pressure fittings
- ◎ Marked with brand, material grade, specification, pressure, and heat number
- ◎ Standard length: 40 in, 80 in, 10 ft, 20 ft, 1 m, 2 m, 3 m and 6 m, straight-length tubing and coned and threaded nipples in custom length are also available.



Materials

UNS	Grade	FITOK Designator	Composition %							
			C	Mn	P	S	Si	Cr	Ni	Mo
S31600/S31603	316/316L	SS	≤0.035	≤2.00	≤0.045	≤0.03	≤1.00	16-18	10-14	2.0-3.0
Enhanced-S31600/S31603	Enhanced-316/316L ①	SH	≤0.03					17-18	12-14	2.6-3.0

① Enhanced-316/316L complying with GB50516-2021 Technical Code for Hydrogen Fuelling Station is available, in which Ni_{eq} is not less than 28.5%. Contact FITOK Group for more information.

Dimensional Tolerance

Tube O.D. in.	O.D. Tolerance in.	Tube I.D. in.	I.D. Tolerance in.
1/4	-0.002/-0.007	0.109	0/-0.005
3/8	-0.005/-0.01	0.203	
9/16		0.312	
3/4		0.438	+/-0.005
1		0.562	
1 1/2		0.937	

Working Pressure at Ambient Temperature

Working pressures are calculated in accordance with ASME B31.3 Chapter IX High Pressure Piping.

Tube O.D. in.	Tube I.D. in.	Working Pressure psig (bar)
1/4	0.109	20,000 (1,379)
3/8	0.203	
9/16	0.312	
3/4	0.438	
1	0.562	
1 1/2	0.937	15,000 (1,034)

Pressure-Temperature Ratings

Working Pressure psig (bar)				
-423 to 100°F (-252 to 37.8°C)	200°F (93°C)	400°F (204°C)	600°F (316°C)	800°F (427°C)
20,000 (1379)	20,000 (1379)	19,000 (1310)	18,000 (1241)	16,800 (1158)
15,000 (1034)	15,000 (1034)	14,200 (979)	13,500 (931)	12,600 (869)

Ordering Information

Cold-Drawn Seamless Tubing

Tube O.D. in.	Tube I.D. in.	Ordering Number①②	
1/4	0.109	☐☐-T20M-4-6M	☐☐-T20M-4-20F
3/8	0.203	☐☐-T20M-6-6M	☐☐-T20M-6-20F
9/16	0.312	☐☐-T20M-9-6M	☐☐-T20M-9-20F
3/4	0.438	☐☐-T20M-12-6M	☐☐-T20M-12-20F
1	0.562	☐☐-T20M-16-6M	☐☐-T20M-16-20F
1 1/2	0.937	☐☐-T20M-24-6M	☐☐-T20M-24-20F

① In the ordering number, "6M"designator refers to 6 m tubing length and "20F" designator refers to 20 ft tubing length. Nipples in custom length available upon request.

② To order, add the material designator as prefix: SS for 316/316L and SH for enhanced-316/316L.

FITOK

Coned and Threaded Nipples

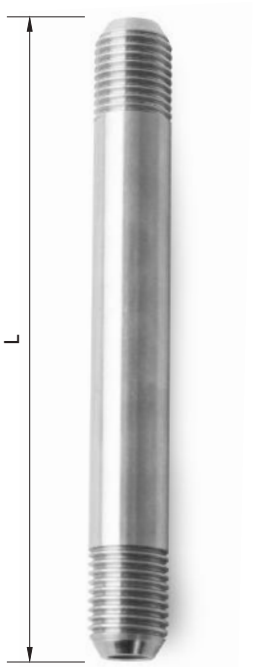

Tube O.D. in.	Tube I.D. in.	Length L① in. (mm)	Ordering Number②
1/4	0.109	3.00 (76.2)	□□-T20M-4CT-3N
		4.00 (101.6)	□□-T20M-4CT-4N
		6.00 (152.4)	□□-T20M-4CT-6N
		8.00 (203.2)	□□-T20M-4CT-8N
		10.0 (254.0)	□□-T20M-4CT-10N
		12.0 (304.8)	□□-T20M-4CT-12N
3/8	0.203	3.00 (76.2)	□□-T20M-6CT-3N
		4.00 (101.6)	□□-T20M-6CT-4N
		6.00 (152.4)	□□-T20M-6CT-6N
		8.00 (203.2)	□□-T20M-6CT-8N
		10.0 (254.0)	□□-T20M-6CT-10N
		12.0 (304.8)	□□-T20M-6CT-12N
9/16	0.312	4.00 (101.6)	□□-T20M-9CT-4N
		6.00 (152.4)	□□-T20M-9CT-6N
		8.00 (203.2)	□□-T20M-9CT-8N
		10.0 (254.0)	□□-T20M-9CT-10N
		12.00 (304.8)	□□-T20M-9CT-12N
3/4	0.438	4.00 (101.6)	□□-T20M-12CT-4N
		6.00 (152.4)	□□-T20M-12CT-6N
		8.00 (203.2)	□□-T20M-12CT-8N
		10.0 (254.0)	□□-T20M-12CT-10N
		12.0 (304.8)	□□-T20M-12CT-12N
1	0.562	6.00 (152.4)	□□-T20M-16CT-6N
		8.00 (203.2)	□□-T20M-16CT-8N
		10.0 (254.0)	□□-T20M-16CT-10N
		12.0 (304.8)	□□-T20M-16CT-12N
1 1/2	0.937	6.00 (152.4)	□□-T20M-24CT-6N
		8.00 (203.2)	□□-T20M-24CT-8N
		10.0 (254.0)	□□-T20M-24CT-10N
		12.0 (304.8)	□□-T20M-24CT-12N

① Nipples in customized length available upon request.
② To order, add the material designator as prefix: SS for 316/316L and SH for enhanced-316/316L.

T60H Series Tubing

Features

- Materials: 316/316L, enhanced-316/316L
- Working pressure up to 60,000 psig (4137 bar)
- Working temperature: -423°F to 1200°F (-252°C to 649°C)
- Cold-drawn seamless tubing
- For use with FITOK 60H series high pressure fittings
- Marked with brand, material grade, specification, pressure, and heat number
- Standard length: 40 in, 80 in, 10 ft, 20 ft, 1 m, 2 m, 3 m and 6 m, straight-length tubing and coned and threaded nipples in custom length are also available.



Materials

UNS	Grade	FITOK Designator	Composition %							
			C	Mn	P	S	Si	Cr	Ni	Mo
S31600/S31603	316/316L	SS	≤0.035	≤2.00	≤0.045	≤0.03	≤1.00	16-18	10-14	2.0-3.0
Enhanced-S31600/S31603	Enhanced-316/316L	SH	≤0.03					17-18	12-14	2.6-3.0

Dimensional Tolerance

Tube O.D. in.	O.D. Tolerance in.	Tube I.D. in.	I.D. Tolerance in.
1/4	-0.002/-0.007	0.083	0/-0.005
3/8	-0.005/-0.01	0.125	
9/16		0.188	

Pressure-Temperature Ratings

Working Pressure psig (bar)				
-423 to 100°F (-252 to 37.8°C)	200°F (93°C)	400°F (204°C)	600°F (316°C)	800°F (427°C)
60,000 (4137)	60,000 (4137)	57,750 (3982)	54,250 (3740)	50,700 (3496)

If tubing is used at temperatures above 800°F (427°C) or reused thereafter, working pressures for tubing in the following table shall apply.

Working Pressure psig (bar)					
-423 to 200°F (-252 to 93°C)	400°F (204°C)	600°F (316°C)	800°F (427°C)	1000°F (538°C)	1200°F (649°C)
24,200 (1669)	22,200 (1531)	20,500 (1413)	18,850 (1300)	18,600 (1282)	8,750 (603)

Ordering Information

Cold-Drawn Seamless Tubing

Tube O.D. in.	Tube I.D. in.	Ordering Number ①②	
1/4	0.083	□□-T60H-4-6M	□□-T60H-4-20F
3/8	0.125	□□-T60H-6-6M	□□-T60H-6-20F
9/16	0.188	□□-T60H-9-6M	□□-T60H-9-20F

① In the ordering number, "6M"designator refers to 6 m tubing length and "20F" designator refers to 20 ft tubing length. Nipples in custom length available upon request.
② To order, add the material designator as prefix: SS for 316/316L and SH for enhanced-316/316L.

Coned and Threaded Nipples

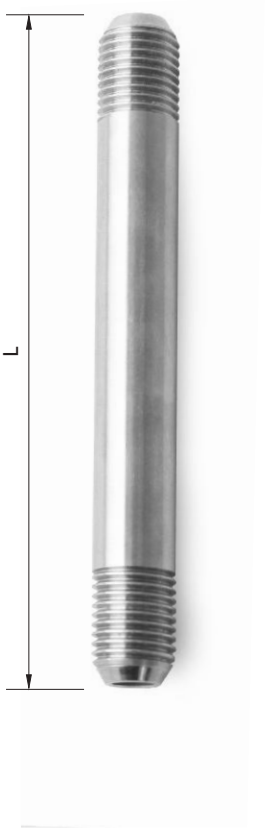

Tube O.D. in.	Tube I.D. in.	Length L ① in. (mm)	Ordering Number②
1/4	0.083	2.75 (69.9)	□□-T60H-4CT-2.75N
		3.00 (76.2)	□□-T60H-4CT-3N
		4.00 (101.6)	□□-T60H-4CT-4N
		6.00 (152.4)	□□-T60H-4CT-6N
		8.00 (203.2)	□□-T60H-4CT-8N
		10.0 (254.0)	□□-T60H-4CT-10N
		12.0 (304.8)	□□-T60H-4CT-12N
3/8	0.125	3.00 (76.2)	□□-T60H-6CT-3N
		4.00 (101.6)	□□-T60H-6CT-4N
		6.00 (152.4)	□□-T60H-6CT-6N
		8.00 (203.2)	□□-T60H-6CT-8N
		10.0 (254.0)	□□-T60H-6CT-10N
		12.0 (304.8)	□□-T60H-6CT-12N
9/16	0.188	4.00 (101.6)	□□-T60H-9CT-4N
		6.00 (152.4)	□□-T60H-9CT-6N
		8.00 (203.2)	□□-T60H-9CT-8N
		10.0 (254.0)	□□-T60H-9CT-10N
		12.0 (304.8)	□□-T60H-9CT-12N

① Nipples in custom length available upon request.
② To order, add the material designator as prefix: SS for 316/316L and SH for enhanced-316/316L.

Quick Couplings



Quick Couplings

HQP Series: 10,000 psig (690 bar)
HQB Series: 10,000 psig (690 bar)
HQS Series: 20,000 psig (1379 bar)
HQC Series: 30,000 psig (2068 bar)



Contents

HQP Series C-04

HQB Series C-06

HQS Series C-08

HQC Series C-10

Ordering Number Description C-16

HQP Series

Features

◎ Working pressure: 10,000 psig (690 bar)
◎ Fluorocarbon FKM O-ring for operation from 0°F to 400°F (-17.8°C to 204°C); other O-ring materials available
◎ Stem and body material: high tensile 316 stainless steel
◎ Push-and-pull type quick coupling without check valve, incapable of withstanding any pressure when disconnected
◎ Flow coefficient (Cv) up to 8.2
◎ Sturdy locking mechanism with large contact area to ensure reliable stem retainment
◎ Slip sleeve lock design prevents accidental disconnection

Cautions

◎ Do not disconnect or connect quick couplings when system is pressurized
◎ Do not rotate quick couplings when connected
◎ Take care to protect the nipple and coupler when disconnected

Standard Materials of Construction

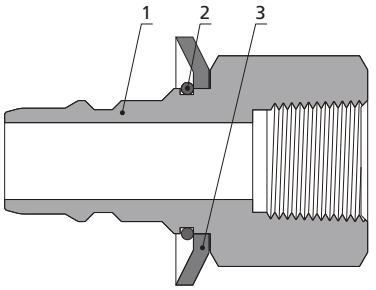

Nipple

Item	Component	Material Grade
1	*Stem*	*316 SS*
2	Wire Ring	Stainless Steel
3	Pull Piece	316 SS

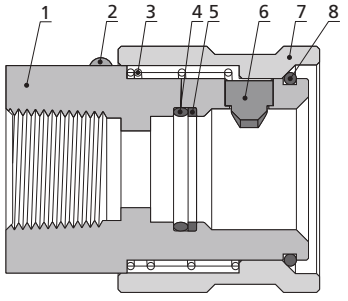

Coupler

Item	Component	Material Grade
1	*Body*	*316 SS*
2	Pin	Stainless Steel
3	Spring	300 Series SS
4	*O-Ring*	*Fluorocarbon FKM*
5	Retaining Ring	PTFE
6	Locking Block	Stainless Steel
7	Slip Sleeve	316 SS
8	Wire Ring	Stainless Steel

Wetted component listed in italics.

Ordering Information and Dimensions

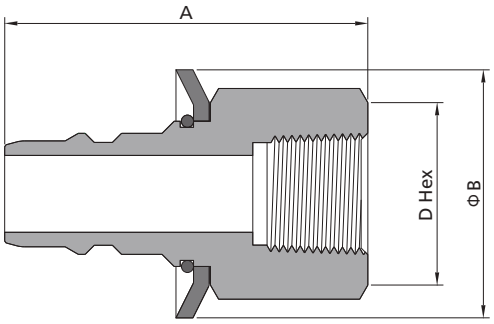

Nipple

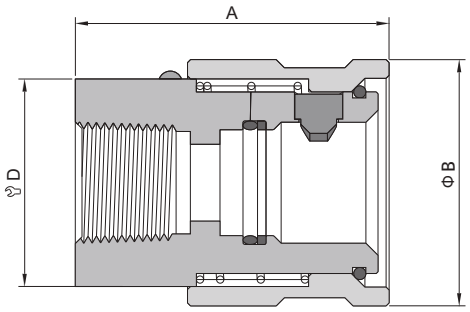

Coupler

Type	Ordering Number	Connection	Dimensions, in. (mm)			Working Pressure psig (bar)
			A	B	D	
Nipple	HQPSS-FNS6-NP	FNS6	2.17 (55.0)	1.59 (40.4)	1.19 (30.2)	10,000 (690)
	HQPSS-FNS8-NP	FNS8	2.36 (60.0)	1.59 (40.4)	1.19 (30.2)	
Coupler	HQPSS-FNS6-CP	FNS6	2.05 (52.0)	1.59 (40.4)	1.19 (30.2)	
	HQPSS-FNS8-CP	FNS8	2.05 (52.0)	1.59 (40.4)	1.19 (30.2)	

Note: All dimensions are shown for reference only and are subject to change. For dimensions not shown above, please contact FITOK Group or our authorized distributors.

HQB Series

Features

◎ Working Pressure: 10,000 psig (690 bar)
◎ Fluorocarbon FKM O-ring for operation from 0°F to 400°F (-17.8°C to 204°C); other O-ring materials available
◎ S17400 stainless steel stem and high tensile S17400 stainless steel body
◎ Screw type quick coupling with check valve, capable of withstanding full pressure when disconnected
◎ Flow coefficient (Cv) up to 0.53
◎ Check valve with metal ball sealing, without guarantee of full gas impermeability

Cautions

◎ Do not disconnect or connect quick couplings when system is pressurized
◎ Finger tighten the threads to "face-to-face" station when connected
◎ Take care to protect the nipple and coupler when disconnected

Standard Materials of Construction

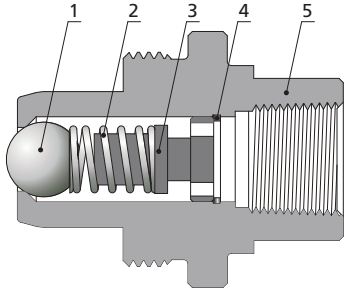

Nipple

Item	Component	Material Grade
1	*Ball*	*Stainless Steel*
2	*Spring*	*300 Series SS*
3	*Seat*	*316 SS*
4	*Retaining Ring*	*Stainless Steel*
5	*Stem*	*S17400 SS*

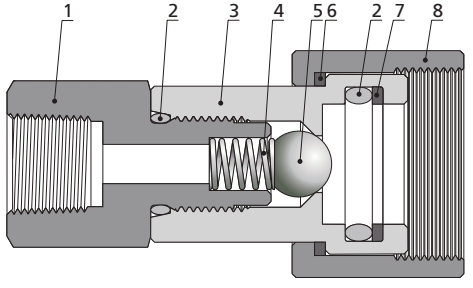

Coupler

Item	Component	Material Grade
1	*Body*	*316 SS*
2	*O-Ring*	*Fluorocarbon FKM*
3	*Housing*	*S17400 SS*
4	*Spring*	*300 Series SS*
5	*Ball*	*Stainless Steel*
6	Ring	C63000
7	Retaining Ring	PTFE
8	Nut	S17400 SS
	Sealant Adhesive	*Anaerobic Adhesive*

Wetted component listed in italics.

Ordering Information and Dimensions

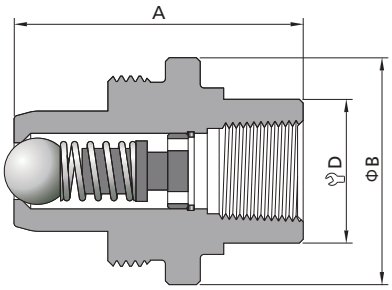

Nipple

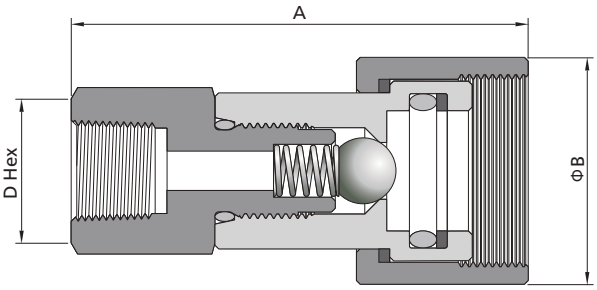

Coupler

Type	Ordering Number	Connection	Dimensions, in. (mm)			Working Pressure psig (bar)
			A	B	D	
Nipple	HQB4P-FNS4-NP	FNS4	1.54 (39.2)	1.18 (30.0)	0.75 (19.0)	10,000 (690)
	HQB4P-FNS6-NP	FNS6	1.54 (39.2)	1.18 (30.0)	0.94 (23.8)	
Coupler	HQB4P-FNS4-CP	FNS4	2.46 (62.4)	1.18 (30.0)	0.87 (22.2)	
	HQB4P-FNS6-CP	FNS6	2.46 (62.4)	1.18 (30.0)	0.94 (23.8)	

Note: All dimensions are shown for reference only and are subject to change. Other dimensions are available upon request.

HQS Series

Features

◎ Working pressure up to 20,000 psig (1379 bar)
◎ Fluorocarbon FKM O-ring for operation from 0°F to 400°F (-17.8°C to 204°C); other O-ring materials available
◎ High tensile 316 stainless steel stem and S17400 stainless steel body
◎ Screw type quick coupling without check valve, incapable of withstanding any pressure when disconnected
◎ Flow coefficient (Cv) up to 33.4

Cautions

◎ Do not disconnect or connect quick couplings when system is pressurized
◎ Finger tighten the threads to "face-to-face" station when connected
◎ Take care to protect the nipple and coupler when disconnected

Standard Materials of Construction

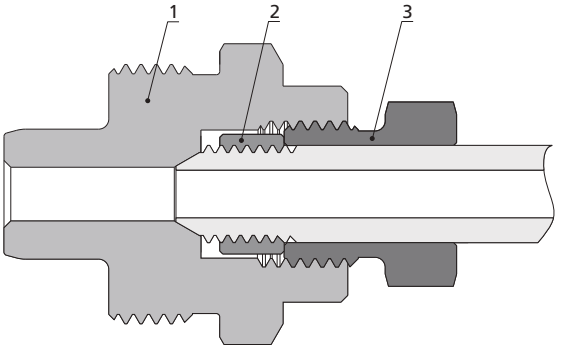

Nipple

Item	Component	Material Grade
1	*Stem*	*316 SS*
2	Collar	316 SS *(For Tubing Connections)*
3	Gland	316 SS *(For Tubing Connections)*

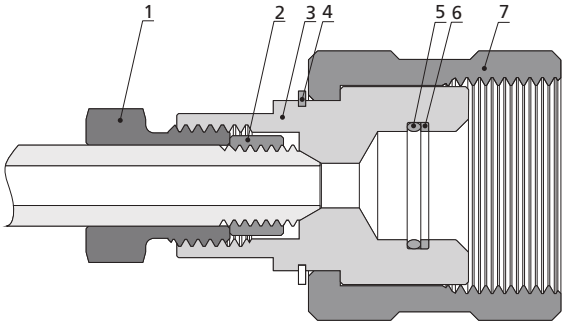

Coupler

Item	Component	Material Grade
1	Gland	316 SS *(For Tubing Connections)*
2	Collar	316 SS *(For Tubing Connections)*
3	*Body*	*S17400 SS*
4	Circlip	Stainless Steel
5	*O-Ring*	*Fluorocarbon FKM*
6	Retaining Ring	PTFE
7	Nut	316 SS

Wetted component listed in italics

Ordering Information and Dimensions

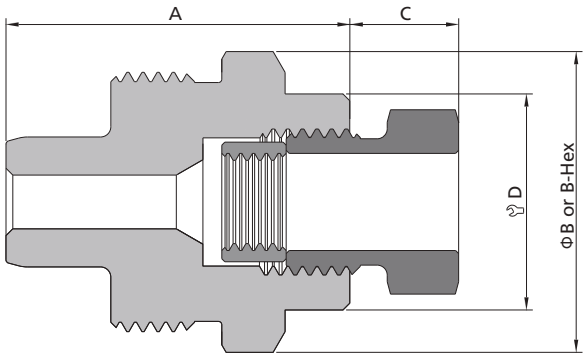

Nipple

Type	Ordering Number	Connection	Dimensions, in. (mm)				Working Pressure psig (bar)
			A	B	C	D	
Nipple	HQSSS-MF9-NP	MF9	2.40 (61.0)	1.74 (44.2)	0.55 (14.0)	1.25 (31.8)	20,000 (1379)
	HQSSS-FNS8-NP	FNS8	2.40 (61.0)	1.74 (44.2)		1.25 (31.8)	15,000 (1034)
	HQSSS-FNS12-NP	FNS12	2.48 (63.0)	2.00 (50.8)			10,000 (690)
	HQSSS-FNS16-NP	FNS16	2.60 (66.0)	2.25 (57.2)			10,000 (690)

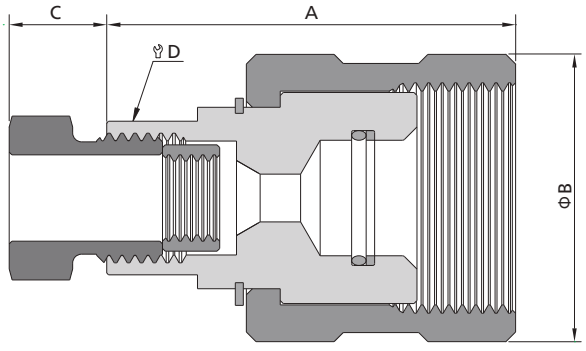

Coupler

Type	Ordering Number	Connection	Dimensions, in. (mm)				Working Pressure psig (bar)
			A	B	C	D	
Coupler	HQSSS-MF9-CP	MF9	2.61 (66.3)	1.91 (48.4)	0.55 (14.0)	1.00 (25.4)	20,000 (1379)
	HQSSS-FNS8-CP	FNS8	2.61 (66.3)	1.91 (48.4)		1.00 (25.4)	15,000 (1034)
	HQSSS-FNS12-CP	FNS12	3.03 (77.0)	2.38 (60.4)		1.38 (34.9)	10,000 (690)
	HQSSS-FNS16-CP	FNS16	3.24 (82.4)	2.57 (65.4)		1.63 (41.3)	10,000 (690)

Note: All dimensions are shown for reference only and are subject to change. Other dimensions are available upon request.

FITOK

HQC Series

HQC Series Couplers

Features

◎ Working pressure up to 30,000 psig (2068 bar)
◎ Fluorocarbon FKM O-ring for operation from 0°F to 400°F (-17.8°C to 204°C); other O-ring materials available
◎ Body material: S17400 stainless steel
◎ Push-and-pull type coupler with check valve, capable of withstanding full pressure when disconnected
◎ Flow coefficient (Cv) up to 0.66

Cautions

◎ Do not disconnect or connect quick couplings when system is pressurized
◎ Do not rotate quick couplings when connected
◎ Take care to protect the nipple and coupler when disconnected

Standard Materials of Construction

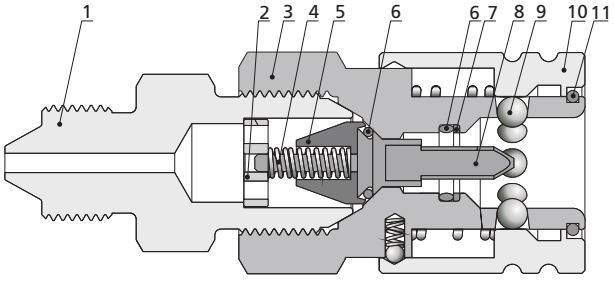

Item	Component	Material Grade
1	*Body*	*S17400 SS*
2	*Seat*	*316 SS*
3	*Housing*	*S17400 SS*
4	*Spring*	*300 Series SS*
5	*Valve Head*	*316 SS*
6	*O-Ring*	*Fluorocarbon FKM*
7	Retaining Ring	PTFE
8	*Valve Stem*	*316 SS*
9	Ball	Stainless Steel
10	Sleeve	316 SS
11	Wire Ring	Stainless Steel

Wetted component listed in italics.

Ordering Information and Dimensions

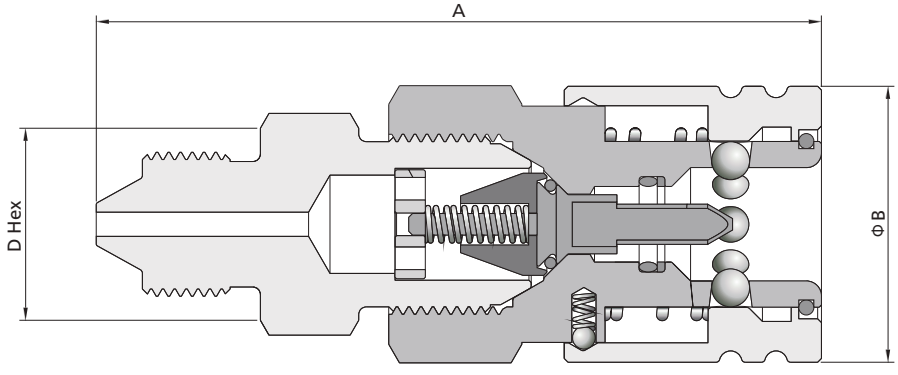

Type	Ordering Number	Connection	Dimensions, in. (mm)			Working Pressure psig (bar)
			A	B	D	
Coupler	HQC4P-NS4-CP	NS4	3.48 (88.5)	1.39 (35.4)	1.00 (25.4)	15,000 (1034)
	HQC4P-NS6-CP	NS6	3.48 (88.5)	1.39 (35.4)	1.00 (25.4)	15,000 (1034)
	HQC4P-NS8-CP	NS8	3.68 (93.5)	1.39 (35.4)	1.00 (25.4)	15,000 (1034)
	HQC4P-FNS4-CP	FNS4	3.17 (80.5)	1.39 (35.4)	1.00 (25.4)	15,000 (1034)
	HQC4P-FNS6-CP	FNS6	3.27 (83.0)	1.39 (35.4)	1.13 (28.6)	15,000 (1034)
	HQC4P-FNS8-CP	FNS8	3.56 (90.5)	1.39 (35.4)	1.38 (34.9)	15,000 (1034)
	HQC4P-JM4-CP	JM4	3.48 (88.5)	1.39 (35.4)	1.00 (25.4)	20,000 (1379)
	HQC4P-JM6-CP	JM6	3.48 (88.5)	1.39 (35.4)	1.00 (25.4)	20,000 (1379)
	HQC4P-JM8-CP	JM8	3.58 (91.0)	1.39 (35.4)	1.00 (25.4)	20,000 (1379)
	HQC4P-MM4-CP	MM4	3.62 (92.0)	1.39 (35.4)	1.00 (25.4)	20,000 (1379)
	HQC4P-MM6-CP	MM6	3.76 (95.5)	1.39 (35.4)	1.00 (25.4)	20,000 (1379)
	HQC4P-MM9-CP	MM9	3.95 (100.5)	1.39 (35.4)	1.00 (25.4)	20,000 (1379)
	HQC4P-HM4-CP	HM4	3.54 (90.0)	1.39 (35.4)	1.00 (25.4)	30,000 (2068)
	HQC4P-HM6-CP	HM6	3.80 (96.5)	1.39 (35.4)	1.00 (25.4)	30,000 (2068)
	HQC4P-HM9-CP	HM9	3.98 (101.0)	1.39 (35.4)	1.19 (30.2)	30,000 (2068)
	HQC4P-TM9-CP	TM9	3.43 (87.0)	1.39 (35.4)	1.00 (25.4)	30,000 (2068)
	HQC4P-TM12-CP	TM12	3.56 (90.5)	1.39 (35.4)	1.00 (25.4)	30,000 (2068)
	HQC4P-TM16-CP	TM16	3.56 (90.5)	1.39 (35.4)	1.00 (25.4)	30,000 (2068)

Note: All dimensions are shown for reference only and are subject to change. Other dimensions are available upon request.

FITOK

HQC Series Nipples with Check Valve

Features

◎ Working pressure up to 30,000 psig (2068 bar)
◎ Fluorocarbon FKM O-ring for operation from 0°F to 400°F (-17.8°C to 204°C); other O-ring materials available
◎ Stem material: S17400 stainless steel
◎ Push-and-pull type nipple with check valve, capable of withstanding full pressure when disconnected
◎ Flow coefficient (Cv) up to 0.66

Cautions

◎ Do not disconnect or connect quick couplings when system is pressurized
◎ Do not rotate quick couplings when connected
◎ Take care to protect the nipple and coupler when disconnected

Standard Materials of Construction

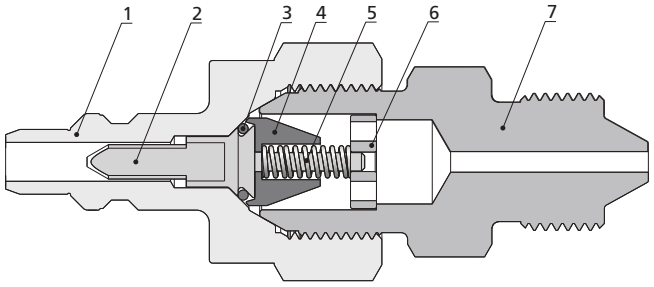

Item	Component	Material Grade
1	*Stem*	*S17400 SS*
2	*Valve Stem*	*316 SS*
3	*O-Ring*	*Fluorocarbon FKM*
4	*Valve Head*	*316 SS*
5	*Spring*	*300 Series SS*
6	*Seat*	*316 SS*
7	*Body*	*S17400*

Wetted component listed in italics.

Ordering Information and Dimensions

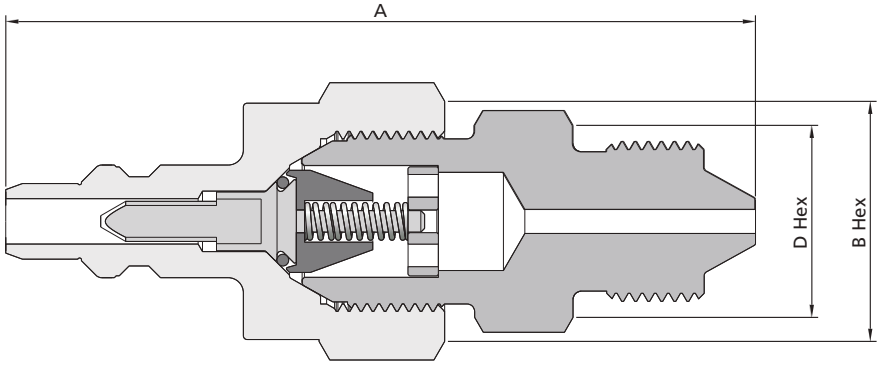

Type	Ordering Number	Connection	Dimensions, in. (mm)			Working Pressure psig (bar)
			A	B	D	
Nipple	HQC4P-NS4-NP	NS4	3.52 (89.5)	1.25 (31.8)	1.00 (25.4)	15,000 (1034)
	HQC4P-NS6-NP	NS6	3.52 (89.5)	1.25 (31.8)	1.00 (25.4)	15,000 (1034)
	HQC4P-NS8-NP	NS8	3.70 (94.0)	1.25 (31.8)	1.00 (25.4)	15,000 (1034)
	HQC4P-FNS4-NP	FNS4	3.19 (81.0)	1.25 (31.8)	1.00 (25.4)	15,000 (1034)
	HQC4P-FNS6-NP	FNS6	3.31 (84.0)	1.25 (31.8)	1.13 (28.6)	15,000 (1034)
	HQC4P-FNS8-NP	FNS8	3.58 (91.0)	1.25 (31.8)	1.38 (34.9)	15,000 (1034)
	HQC4P-JM4-NP	JM4	3.50 (89.0)	1.25 (31.8)	1.00 (25.4)	20,000 (1379)
	HQC4P-JM6-NP	JM6	3.50 (89.0)	1.25 (31.8)	1.00 (25.4)	20,000 (1379)
	HQC4P-JM8-NP	JM8	3.43 (92.0)	1.25 (31.8)	1.00 (25.4)	20,000 (1379)
	HQC4P-MM4-NP	MM4	3.64 (92.5)	1.25 (31.8)	1.00 (25.4)	20,000 (1379)
	HQC4P-MM6-NP	MM6	3.80 (96.5)	1.25 (31.8)	1.00 (25.4)	20,000 (1379)
	HQC4P-MM9-NP	MM9	3.98 (101.0)	1.25 (31.8)	1.00 (25.4)	20,000 (1379)
	HQC4P-HM4-NP	HM4	3.58 (91.0)	1.25 (31.8)	1.00 (25.4)	30,000 (2068)
	HQC4P-HM6-NP	HM6	3.84 (97.5)	1.25 (31.8)	1.00 (25.4)	30,000 (2068)
	HQC4P-HM9-NP	HM9	4.02 (102.0)	1.25 (31.8)	1.19 (30.2)	30,000 (2068)
	HQC4P-TM9-NP	TM9	3.46 (88.0)	1.25 (31.8)	1.00 (25.4)	30,000 (2068)
	HQC4P-TM12-NP	TM12	3.58 (91.0)	1.25 (31.8)	1.00 (25.4)	30,000 (2068)
	HQC4P-TM16-NP	TM16	3.60 (91.5)	1.25 (31.8)	1.00 (25.4)	30,000 (2068)

Note: All dimensions are shown for reference only and are subject to change. Other dimensions are available upon request.

FITOK

HQC Series Nipples without Check Valve

Features

◎ Working pressure up to 30,000 psig (2068 bar)
◎ Stem material: S17400 stainless steel
◎ Push-and-pull type nipple without check valve, incapable of withstanding any pressure when disconnected
◎ Flow coefficient (Cv) up to 0.66

Cautions

◎ Do not disconnect or connect quick couplings when system is pressurized
◎ Do not rotate quick couplings when connected
◎ Take care to protect the nipple and coupler when disconnected

Ordering Information and Dimensions

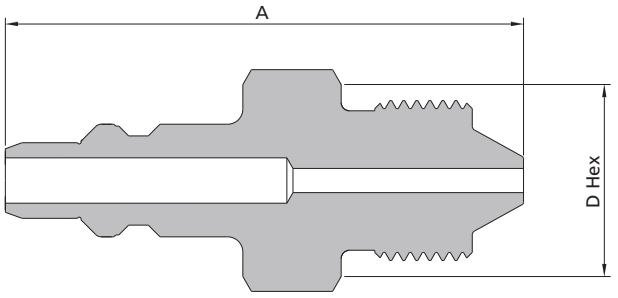

Type	Ordering Number	Connection	Dimensions, in. (mm)		Working Pressure psig (bar)
			A	D	
Nipple	HQC4P-NS4-NPO	NS4	2.25 (57.1)	1.00 (25.4)	15,000 (1034)
	HQC4P-NS6-NPO	NS6	2.25 (57.1)	1.00 (25.4)	15,000 (1034)
	HQC4P-NS8-NPO	NS8	2.44 (62.0)	1.00 (25.4)	15,000 (1034)
	HQC4P-FNS4-NPO	FNS4	2.05 (52.0)	1.00 (25.4)	15,000 (1034)
	HQC4P-FNS6-NPO	FNS6	2.09 (53.0)	1.13 (28.6)	15,000 (1034)
	HQC4P-FNS8-NPO	FNS8	2.36 (60.0)	1.38 (34.9)	15,000 (1034)
	HQC4P-JM4-NPO	JM4	2.24 (56.9)	1.00 (25.4)	20,000 (1379)
	HQC4P-JM6-NPO	JM6	2.24 (57.0)	1.00 (25.4)	20,000 (1379)
	HQC4P-JM8-NPO	JM8	2.35 (59.6)	1.00 (25.4)	20,000 (1379)
	HQC4P-MM4-NPO	MM4	2.37 (60.3)	1.00 (25.4)	20,000 (1379)
	HQC4P-MM6-NPO	MM6	2.52 (64.0)	1.00 (25.4)	20,000 (1379)
	HQC4P-MM9-NPO	MM9	2.69 (68.3)	1.00 (25.4)	20,000 (1379)
	HQC4P-HM4-NPO	HM4	2.31 (58.7)	1.00 (25.4)	30,000 (2068)
	HQC4P-HM6-NPO	HM6	2.56 (65.1)	1.00 (25.4)	30,000 (2068)
	HQC4P-HM9-NPO	HM9	2.81 (71.4)	1.19 (30.2)	30,000 (2068)
	HQC4P-TM9-NPO	TM9	2.19 (55.6)	1.00 (25.4)	30,000 (2068)
	HQC4P-TM12-NPO	TM12	2.32 (58.9)	1.00 (25.4)	30,000 (2068)
	HQC4P-TM16-NPO	TM16	2.33 (59.2)	1.00 (25.4)	30,000 (2068)

Note: All dimensions are for reference only and are subject to change. For dimensions not shown above, please contact FITOK Group or our authorized distributors.

Ordering Number Description

HQC4P - HM6 - NP - B

Series	Body/Stem Material	Connection Type and Size	Product Type	O-Ring Material

Series
HQP
HQB
HQS
HQC

Body/Stem Material	
SS	316 SS
4P	S17400 SS

Connection Type and Size	
MF9	9/16" Female Medium Pressure
NS4	1/4" Male NPT
NS6	3/8" Male NPT
NS8	1/2" Male NPT
FNS4	1/4" Female NPT
FNS6	3/8" Female NPT
FNS8	1/2" Female NPT
JM4	1/4" Male JIC
JM6	3/8" Male JIC
JM8	1/2" Male JIC
MM4	1/4" Male Medium Pressure
MM6	3/8" Male Medium Pressure
MM9	9/16" Male Medium Pressure
HM4	1/4" Male High Pressure
HM6	3/8" Male High Pressure
HM9	9/16" Male High Pressure
TM9	9/16-18 (Thread Size) Male Type "M"
TM12	3/4-16 (Thread Size) Male Type "M"
TM16	1-12 (Thread Size) Male Type "M"

Product Type	
CP	HQP, HQB, HQS and HQC
NP	HQP, HQB and HQS
	HQC Series Nipple with Check Valve
NPO	HQC Series Nipple without Check Valve

O-Ring Material	
	Fluorocarbon FKM
B	NBR

Designator	O-Ring Material	Working Temperature Range, °F (°C)
	Fluorocarbon FKM	0 to 400 (-17.8 to 204)
B	NBR	-10 to 250 (-23 to 121)

Notes: 1. For more details regarding Medium/High Pressure connections, please see **Connection Information** on A-02.
2. "Ordering Number Description" is a reference to understand the combination rules of FITOK product part number. Not all combinations are available.

Line Filters

Line Filters  D-02

Line Filters

10FD, 10FC Series Line Filters: 10,000 psig (690 bar)
15FD, 15FC Series Line Filters: 15,000 psig (1034 bar)
20FD, 20FC Series Line Filters: 20,000 psig (1379 bar)
60FD, 60FC Series Line Filters: 60,000 psig (4137 bar)



Contents

10FD Series

Dual-Disc Line Filters D-04

10FC Series

Cup-Type Line Filters D-05

15FD Series

Dual-Disc Line Filters D-06

15FC Series

Cup-Type Line Filters D-08

20FD Series

Dual-Disc Line Filters D-10

20FC Series

Cup-Type Line Filters D-11

60FD Series

Dual-Disc Line Filters D-12

60FC Series

Cup-Type Line Filters D-13

Ordering Number Description

D-14

10FD Series: 10,000 psig (690 bar)

Dual-Disc Line Filters

Features

- Working temperature range: -60°F to 400°F (-50°C to 204°C)
- 3/4" and 1" female NPT available
- Dual-disc design allows the upstream filter element to trap the large particulate contaminants before they can reach and clog the smaller pore-size downstream element
- Downstream/upstream element nominal pore sizes: 5/10, 10/35 and 35/65 µm; other element combinations available on request
- Easy to replace filter elements
- Pressure differential not to exceed 1000 psig (69 bar) in a flowing condition

Standard Materials of Construction

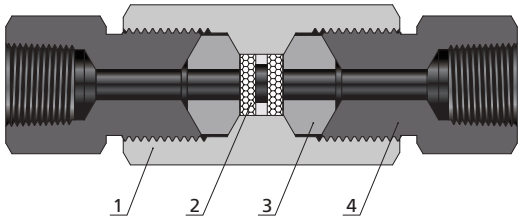

Item	Component	Material Grade
1	*Body*	*316 SS*
2	*Filter Element*	*Sintered 316 SS*
3	*Cover*	*316 SS*
4	*Gland Nut*	*316 SS*
	Lubricant	Molybdenum Disulfide

Wetted component listed in italics.

Ordering Information and Dimensions

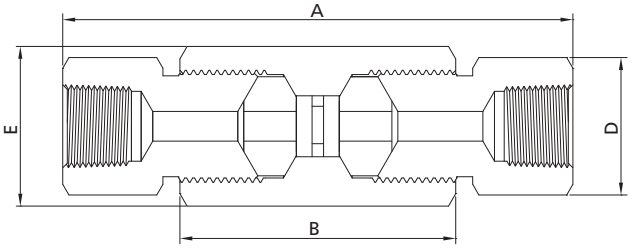

Ordering Number	Connection	Orifice in. (mm)	Nominal Pore Size (µm)	Effective Filter Element Area in.² (mm²)	Dimensions, in. (mm)				Working Pressure psig (bar)
					A	B	D (Hex)	E (Hex)	
10FDSS-FNS12-0510	FNS12	0.36 (9.1)	5/10	0.44 (286.5)	5.59 (142.0)	3.06 (77.8)	1.50 (38.1)	1.75 (44.5)	10,000 (690)
10FDSS-FNS12-1035			10/35						
10FDSS-FNS12-3565			35/65						
10FDSS-FNS16-0510	FNS16	0.56 (14.3)	5/10	0.89 (572.6)	6.66 (169.1)	3.63 (92.1)	1.75 (44.5)	1.88 (47.7)	10,000 (690)
10FDSS-FNS16-1035			10/35						
10FDSS-FNS16-3565			35/65						

Note: Dimensions are for reference only and are subject to change.

10FC Series: 10,000 psig (690 bar)

Cup-Type Line Filters

Features

- Working temperature range: -60°F to 400°F (-50°C to 204°C)
- 3/4" and 1" female NPT available
- Cup design to offer about six times the effective filter area as compared to disc-type units, and recommended in systems requiring both maximum filter surface area and high flow rates
- Nominal pore sizes for filter elements: 5, 35 and 65 µm
- Easy to replace filter elements
- Pressure differential not to exceed 1000 psig (69 bar) in a flowing condition

Standard Materials of Construction

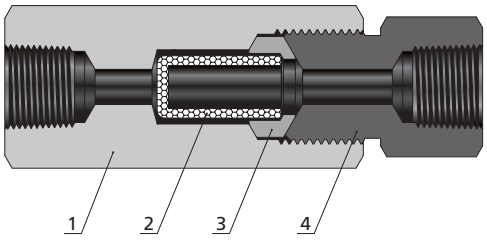

Item	Component	Material Grade
1	*Body*	*316 SS*
2	*Filter Element*	*Sintered 316 SS*
3	*Cover*	*316 SS*
4	*Gland Nut*	*316 SS*
	Lubricant	Molybdenum Disulfide

Wetted component listed in italics.

Ordering Information and Dimensions

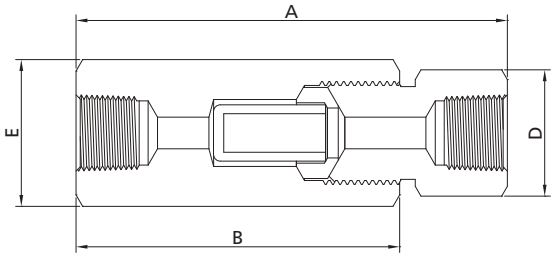

Ordering Number	Connection	Orifice in. (mm)	Nominal Pore Size (µm)	Effective Filter Element Area in.² (mm²)	Dimensions, in. (mm)				Working Pressure psig (bar)
					A	B	D (Hex)	E (Hex)	
10FCSS-FNS12-5	FNS12	0.52 (13.1)	5	2.65 (1709.7)	5.14 (130.6)	3.87 (98.4)	1.50 (38.1)	1.75 (44.5)	10,000 (690)
10FCSS-FNS12-35			35						
10FCSS-FNS12-65			65						
10FCSS-FNS16-5	FNS16	0.69 (17.5)	5	5.00 (3225.8)	6.39 (162.3)	4.87 (123.8)	1.75 (44.5)	1.88 (47.7)	10,000 (690)
10FCSS-FNS16-35			35						
10FCSS-FNS16-65			65						

Note: Dimensions are for reference only and are subject to change.

15FD Series: 15,000 psig (1034 bar)

Dual-Disc Line Filters

Features

- Working temperature ranges:
  Tubing connection: -60°F to 660°F (-50°C to 350°C)
  Pipe connection: -60°F to 400°F (-50°C to 204°C)
- Connection types and sizes:
  1/8", 1/4", 3/8" and 1/2" O.D. tubing
  1/8", 1/4", 3/8" and 1/2" Female NPT
- Dual-disc design allows the upstream filter element to trap the large particulate contaminants before they can reach and clog the smaller pore-size downstream element
- Downstream/upstream element nominal pore sizes: 5/10, 10/35 and 35/65 µm; other element combinations available on request
- Easy to replace filter elements
- Pressure differential not to exceed 1000 psig (69 bar) in a flowing condition

Standard Materials of Construction

Tubing Connection

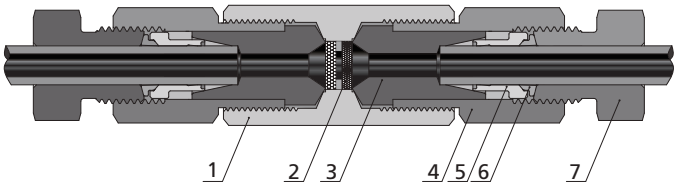

Item	Component	Material Grade
1	*Body*	*316 SS*
2	*Filter Element*	*Sintered 316 SS*
3	*Cover*	*316 SS*
4	Gland Nut	316 SS
5	*Front Ferrule*	*316 SS*
6	Rear Ferrule	316 SS
7	Nut	316 SS
	Lubricant	Molybdenum Disulfide

Pipe Connection

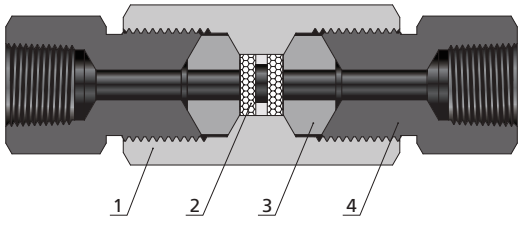

Item	Component	Material Grade
1	*Body*	*316 SS*
2	*Filter Element*	*Sintered 316 SS*
3	*Cover*	*316 SS*
4	*Gland Nut*	*316 SS*
	Lubricant	Molybdenum Disulfide

Wetted component listed in italics.

Ordering Information and Dimensions

Tubing Connection

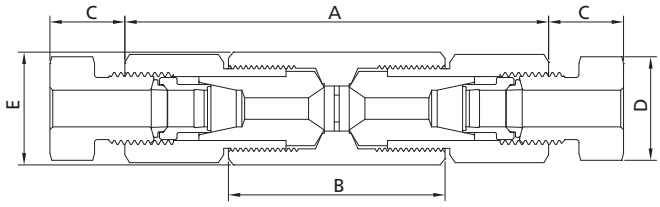

Pipe Connection

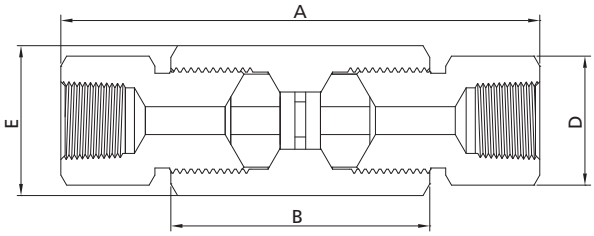

Ordering Number	Connection	Orifice in. (mm)	Nominal Pore Size (µm)	Effective Filter Element Area in.² (mm²)	Dimensions, in. (mm)					Working Pressure psig (bar)
					A	B	C	D (Hex)	E (Hex)	
15FDSS-DFF2-0510	DFF2	0.09 (2.4)	5/10	0.06 (38.7)	2.38 (60.5)	1.50 (38.1)	0.44 (11.2)	0.37 (9.5)	0.63 (15.9)	15,000 (1034)
15FDSS-DFF2-1035			10/35							
15FDSS-DFF2-3565			35/65							
15FDSS-DFF4-0510	DFF4	0.13 (3.2)	5/10	0.15 (96.8)	3.17 (80.5)	2.00 (50.8)	0.52 (13.3)	0.63 (15.9)	0.81 (20.6)	15,000 (1034)
15FDSS-DFF4-1035			10/35							
15FDSS-DFF4-3565			35/65							
15FDSS-DFF6-0510	DFF6	0.13 (3.2)	5/10	0.15 (96.8)	3.36 (85.4)	2.19 (55.6)	0.54 (13.6)	0.75 (19.1)	1.00 (25.4)	15,000 (1034)
15FDSS-DFF6-1035			10/35							
15FDSS-DFF6-3565			35/65							
15FDSS-DFF8-0510	DFF8	0.19 (4.8)	5/10	0.25 (161.3)	4.30 (109.1)	2.94 (74.6)	0.60 (15.3)	0.94 (23.8)	1.19 (30.2)	15,000 (1034)
15FDSS-DFF8-1035			10/35							
15FDSS-DFF8-3565			35/65							
15FDSS-FNS2-0510	FNS2	0.13 (3.2)	5/10	0.06 (38.7)	2.79 (70.8)	1.50 (38.1)	—	0.63 (15.9)	0.63 (15.9)	15,000 (1034)
15FDSS-FNS2-1035			10/35							
15FDSS-FNS2-3565			35/65							
15FDSS-FNS4-0510	FNS4	0.19 (4.8)	5/10	0.15 (96.8)	4.15 (105.5)	2.19 (55.6)	—	0.94 (23.8)	1.00 (25.4)	15,000 (1034)
15FDSS-FNS4-1035			10/35							
15FDSS-FNS4-3565			35/65							
15FDSS-FNS6-0510	FNS6	0.19 (4.8)	5/10	0.15 (96.8)	4.15 (105.5)	2.19 (55.6)	—	1.13 (28.6)	1.13 (28.6)	15,000 (1034)
15FDSS-FNS6-1035			10/35							
15FDSS-FNS6-3565			35/65							
15FDSS-FNS8-0510	FNS8	0.31 (7.9)	5/10	0.25 (161.3)	5.27 (133.8)	2.94 (74.6)	—	1.38 (35.0)	1.38 (35.0)	15,000 (1034)
15FDSS-FNS8-1035			10/35							
15FDSS-FNS8-3565			35/65							

Note: Dimensions are for reference only and are subject to change.

15FC Series: 15,000 psig (1034 bar)

Cup-Type Line Filters

Features

- Working temperature ranges:
  Tubing connection: -60°F to 660°F (-50°C to 350°C)
  Pipe connection: -60°F to 400°F (-50°C to 204°C)
- Connection types and sizes:
  1/8", 1/4", 3/8" and 1/2" O.D. tubing
  1/8", 1/4", 3/8" and 1/2" Female NPT
- Cup design to offer about six times the effective filter area as compared to disc-type units, and recommended in systems requiring both maximum filter surface area and high flow rates
- Nominal pore sizes for filter elements: 5, 35 and 65 µm
- Easy to replace filter elements
- Pressure differential not to exceed 1000 psig (69 bar) in a flowing condition

Standard Materials of Construction

Tubing Connection

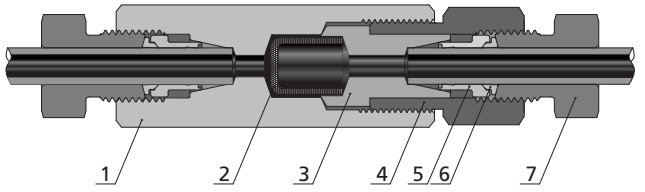

Item	Component	Material Grade
1	*Body*	*316 SS*
2	*Filter Element*	*Sintered 316 SS*
3	*Cover*	*316 SS*
4	Gland Nut	316 SS
5	*Front Ferrule*	*316 SS*
6	Rear Ferrule	316 SS
7	Nut	316 SS
	Lubricant	Molybdenum Disulfide

Pipe Connection

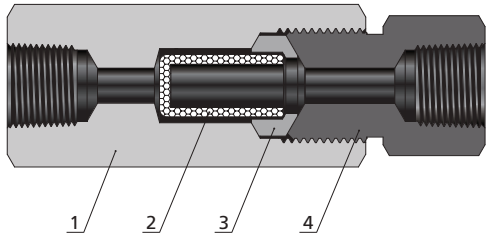

Item	Component	Material Grade
1	*Body*	*316 SS*
2	*Filter Element*	*Sintered 316 SS*
3	*Cover*	*316 SS*
4	*Gland Nut*	*316 SS*
	Lubricant	Molybdenum Disulfide

Wetted component listed in italics.

Ordering Information and Dimensions

Tubing Connection

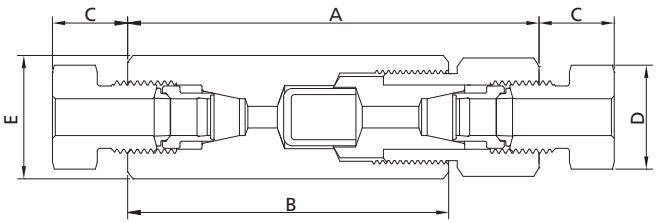

Pipe Connection

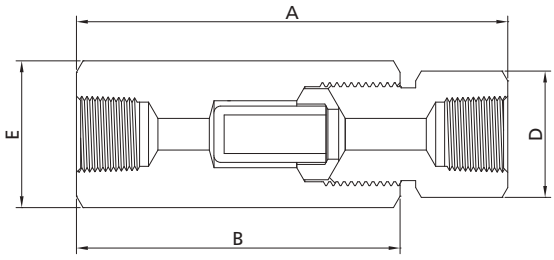

Ordering Number	Connection	Orifice in. (mm)	Nominal Pore Size (µm)	Effective Filter Element Area in.² (mm²)	Dimensions, in. (mm)					Working Pressure psig (bar)
					A	B	C	D (Hex)	E (Hex)	
15FCSS-DFF4-5	DFF4	0.19 (4.8)	5	0.81 (522.6)	3.34 (84.8)	2.72 (69.0)	0.52 (13.3)	0.63 (15.9)	0.81 (20.6)	15,000 (1034)
15FCSS-DFF4-35			35							
15FCSS-DFF4-65			65							
15FCSS-DFF6-5	DFF6	0.31 (7.9)	5	0.81 (522.6)	3.51 (89.2)	2.95 (75.0)	0.54 (13.6)	0.75 (19.1)	1.00 (25.4)	15,000 (1034)
15FCSS-DFF6-35			35							
15FCSS-DFF6-65			65							
15FCSS-DFF8-5	DFF8	0.44 (11.1)	5	1.53 (987.1)	4.30 (109.2)	3.62 (92.0)	0.60 (15.3)	0.94 (23.8)	1.38 (35.0)	15,000 (1034)
15FCSS-DFF8-35			35							
15FCSS-DFF8-65			65							
15FCSS-FNS2-5	FNS2	0.13 (3.2)	5	0.38 (245.0)	2.58 (65.6)	1.94 (49.2)	—	0.63 (15.9)	0.63 (15.9)	15,000 (1034)
15FCSS-FNS2-35			35							
15FCSS-FNS2-65			65							
15FCSS-FNS4-5	FNS4	0.31 (7.9)	5	0.81 (522.6)	3.66 (93.0)	2.69 (68.3)	—	0.94 (23.8)	1.00 (25.4)	15,000 (1034)
15FCSS-FNS4-35			35							
15FCSS-FNS4-65			65							
15FCSS-FNS6-5	FNS6	0.31 (7.9)	5	0.81 (522.6)	3.66 (93.0)	2.69 (68.3)	—	1.13 (28.6)	1.13 (28.6)	15,000 (1034)
15FCSS-FNS6-35			35							
15FCSS-FNS6-65			65							
15FCSS-FNS8-5	FNS8	0.44 (11.1)	5	1.53 (987.1)	4.55 (115.6)	3.37 (85.7)	—	1.38 (35.0)	1.38 (35.0)	15,000 (1034)
15FCSS-FNS8-35			35							
15FCSS-FNS8-65			65							

Note: Dimensions are for reference only and are subject to change.

FITOK

20FD Series: 20,000 psig (1379 bar)
Dual-Disc Line Filters

Features

- Working temperature range: -60°F to 660°F (-50°C to 350°C)
- Tubing size available in 9/16"
- Dual-disc design allows the upstream filter element to trap the large particulate contaminants before they can reach and clog the smaller pore-size downstream element
- Downstream/upstream element nominal pore size: 5/10, 10/35 and 35/65 µm; other element combinations available on request
- Easy to replace filter elements
- Pressure differential not to exceed 1000 psig (69 bar) in a flowing condition

Standard Materials of Construction

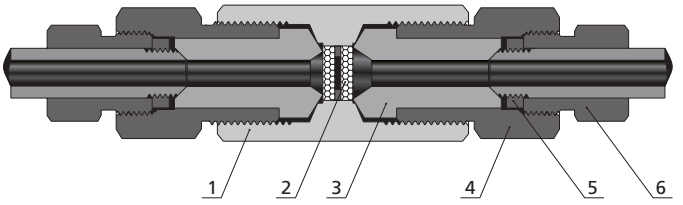

Item	Component	Material Grade
1	*Body*	*316 SS*
2	*Filter Element*	*Sintered 316 SS*
3	*Cover*	*316 SS*
4	Gland Nut	316 SS
5	Collar	316 SS
6	Gland	316 SS
	Lubricant	Molybdenum Disulfide

Wetted component listed in italics.

Ordering Information and Dimensions

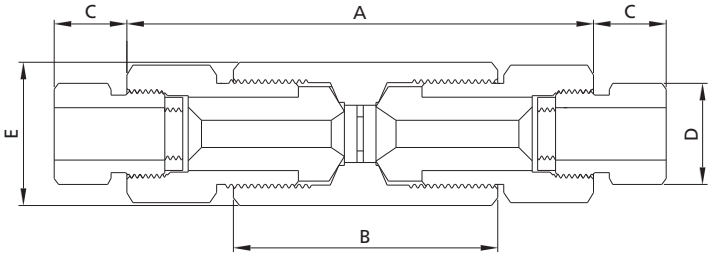

Ordering Number	Connection	Orifice in. (mm)	Nominal Pore Size (µm)	Effective Filter Element Area in.² (mm²)	Dimensions, in. (mm)					Working Pressure psig (bar)
					A	B	C	D (Hex)	E (Hex)	
20FDSS-MF9-0510	MF9	0.31 (7.9)	5/10	0.25 (161.3)	4.30 (109.2)	2.94 (74.6)	0.55 (14.0)	0.94 (23.8)	1.38 (35.0)	20,000 (1379)
20FDSS-MF9-1035			10/35							
20FDSS-MF9-3565			35/65							

Note: Dimensions are for reference only and are subject to change.

20FC Series: 20,000 psig (1379 bar)
Cup-Type Line Filters

Features

- Working temperature range: -60°F to 660°F (-50°C to 350°C)
- Tubing sizes available in 1/4", 3/8", 9/16", 3/4" and 1"
- Cup design to offer about six times the effective filter area as compared to disc-type units, and recommended in systems requiring both maximum filter surface area and high flow rates
- Nominal pore sizes for filter elements: 5, 35 and 65 µm
- Easy to replace filter elements
- Pressure differential not to exceed 1000 psig (69 bar) in a flowing condition

Standard Materials of Construction

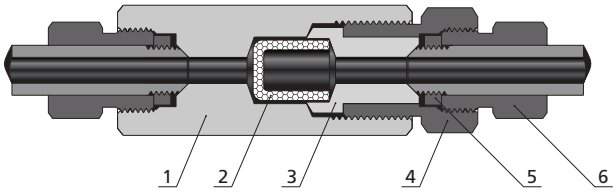

Item	Component	Material Grade
1	*Body*	*316 SS*
2	*Filter Element*	*Sintered 316 SS*
3	*Cover*	*316 SS*
4	Gland Nut	316 SS
5	Collar	316 SS
6	Gland	316 SS
	Lubricant	Molybdenum Disulfide

Wetted component listed in italics.

Ordering Information and Dimensions

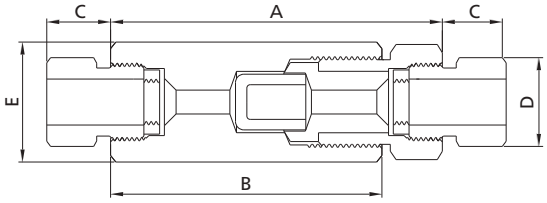

Ordering Number	Connection	Orifice in. (mm)	Nominal Pore Size (µm)	Effective Filter Element Area in.² (mm²)	Dimensions, in. (mm)					Working Pressure psig (bar)
					A	B	C	D (Hex)	E (Hex)	
20FCSS-MF4-5	MF4	0.13 (3.2)	5	0.81 (522.6)	2.94 (74.1)	2.50 (63.5)	0.38 (9.7)	0.50 (12.7)	0.81 (20.6)	20,000 (1379)
20FCSS-MF4-35			35							
20FCSS-MF4-65			65							
20FCSS-MF6-5	MF6	0.22 (5.5)	5	0.81 (522.6)	3.12 (79.3)	2.62 (66.6)	0.44 (11.2)	0.63 (15.9)	1.00 (25.4)	20,000 (1379)
20FCSS-MF6-35			35							
20FCSS-MF6-65			65							
20FCSS-MF9-5	MF9	0.36 (9.1)	5	1.53 (987.1)	4.18 (106.2)	3.50 (88.9)	0.55 (14.0)	0.94 (23.8)	1.38 (35.0)	20,000 (1379)
20FCSS-MF9-35			35							
20FCSS-MF9-65			65							
20FCSS-MF12-5	MF12	0.52 (13.1)	5	2.65 (1709.7)	5.50 (139.7)	4.75 (120.7)	0.60 (15.2)	1.19 (30.2)	1.75 (44.5)	20,000 (1379)
20FCSS-MF12-35			35							
20FCSS-MF12-65			65							
20FCSS-MF16-5	MF16	0.69 (17.5)	5	5.00 (3225.8)	6.62 (168.2)	5.75 (146.1)	0.74 (18.7)	1.38 (35.0)	2.12 (54.0)	20,000 (1379)
20FCSS-MF16-35			35							
20FCSS-MF16-65			65							

Note: Dimensions are for reference only and are subject to change.

FITOK

60FD Series: 60,000 psig (4137 bar)

Dual-Disc Line Filters

Features

- Working temperature range: -60°F to 660°F (-50°C to 350°C)
- Tubing sizes available in 1/4", 3/8" and 9/16"
- Dual-disc design allows the upstream filter element to trap the large particulate contaminants before they can reach and clog the smaller pore-size downstream element
- Downstream/upstream element nominal pore size: 5/10, 10/35 and 35/65 µm; other element combinations available on request
- Easy to replace filter elements
- Pressure differential not to exceed 1000 psig (69 bar) in a flowing condition

Standard Materials of Construction

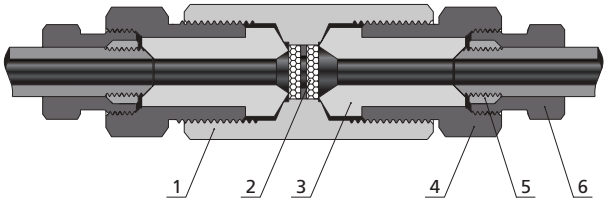

Item	Component	Material Grade
1	*Body*	*316 SS*
2	*Filter Element*	*Sintered 316 SS*
3	*Cover*	*316 SS*
4	Gland Nut	316 SS
5	Collar	316 SS
6	Gland	316 SS
	Lubricant	Molybdenum Disulfide

Wetted component listed in italics.

Ordering Information and Dimensions

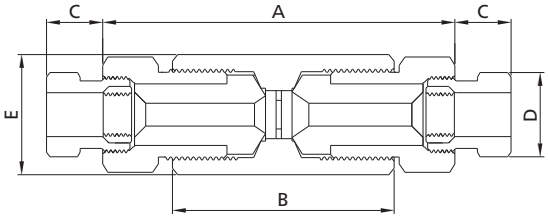

Ordering Number	Connection	Orifice in. (mm)	Nominal Pore Size (µm)	Effective Filter Element Area in.² (mm²)	Dimensions, in. (mm)					Working Pressure psig (bar)
					A	B	C	D (Hex)	E (Hex)	
60FDSS-HF4-0510	HF4	0.09 (2.4)	5/10	0.07 (45.2)	4.73 (120.1)	3.00 (76.2)	0.47 (11.9)	0.63 (15.9)	1.19 (30.2)	60,000 (4137)
60FDSS-HF4-1035			10/35							
60FDSS-HF4-3565			35/65							
60FDSS-HF6-0510	HF6	0.13 (3.2)	5/10	0.07 (45.2)	5.12 (130.2)	3.00 (76.2)	0.61 (15.8)	0.75 (19.1)	1.19 (30.2)	60,000 (4137)
60FDSS-HF6-1035			10/35							
60FDSS-HF6-3565			35/65							
60FDSS-HF9-0510	HF9	0.19 (4.8)	5/10	0.15 (96.8)	5.81 (147.6)	3.38 (85.9)	0.95 (24.1)	1.19 (30.2)	1.50 (38.1)	60,000 (4137)
60FDSS-HF9-1035			10/35							
60FDSS-HF9-3565			35/65							

Note: Dimensions are for reference only and are subject to change.

60FC Series: 60,000 psig (4137 bar)

Cup-Type Line Filters

Features

- Working temperature range: -60°F to 660°F (-50°C to 350°C)
- Tubing sizes available in 1/4", 3/8" and 9/16"
- Cup design to offer about six times the effective filter area as compared to disc-type units, and recommended in systems requiring both maximum filter surface area and high flow rates
- Nominal pore sizes for filter elements: 5, 35 and 65 µm
- Easy to replace filter elements
- Pressure differential not to exceed 1000 psig (69 bar) in a flowing condition

Standard Materials of Construction

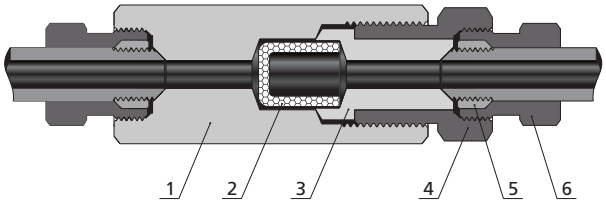

Item	Component	Material Grade
1	*Body*	*316 SS*
2	*Filter Element*	*Sintered 316 SS*
3	*Cover*	*316 SS*
4	Gland Nut	316 SS
5	Collar	316 SS
6	Gland	316 SS
	Lubricant	Molybdenum Disulfide

Wetted component listed in italics.

Ordering Information and Dimensions

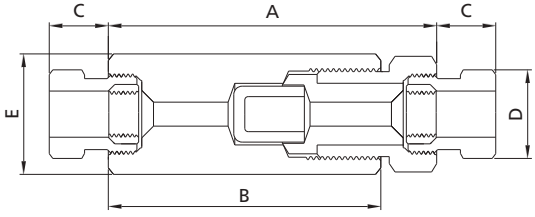

Ordering Number	Connection	Orifice in. (mm)	Nominal Pore Size (µm)	Effective Filter Element Area in.² (mm²)	Dimensions, in. (mm)					Working Pressure psig (bar)
					A	B	C	D (Hex)	E (Hex)	
60FCSS-HF4-5	HF4	0.09 (2.4)	5	1.29 (832.3)	4.19 (106.4)	3.38 (85.9)	0.47 (11.9)	0.63 (15.9)	1.38 (35.0)	60,000 (4137)
60FCSS-HF4-35			35							
60FCSS-HF4-65			65							
60FCSS-HF6-5	HF6	0.13 (3.2)	5	1.29 (832.3)	4.62 (117.4)	3.62 (91.9)	0.61 (15.6)	0.75 (19.1)	1.38 (35.0)	60,000 (4137)
60FCSS-HF6-35			35							
60FCSS-HF6-65			65							
60FCSS-HF9-5	HF9	0.19 (4.8)	5	1.29 (832.3)	5.25 (133.4)	4.06 (103.1)	0.95 (24.1)	1.19 (30.2)	1.50 (38.1)	60,000 (4137)
60FCSS-HF9-35			35							
60FCSS-HF9-65			65							

Note: Dimensions are for reference only and are subject to change.

Ordering Number Description

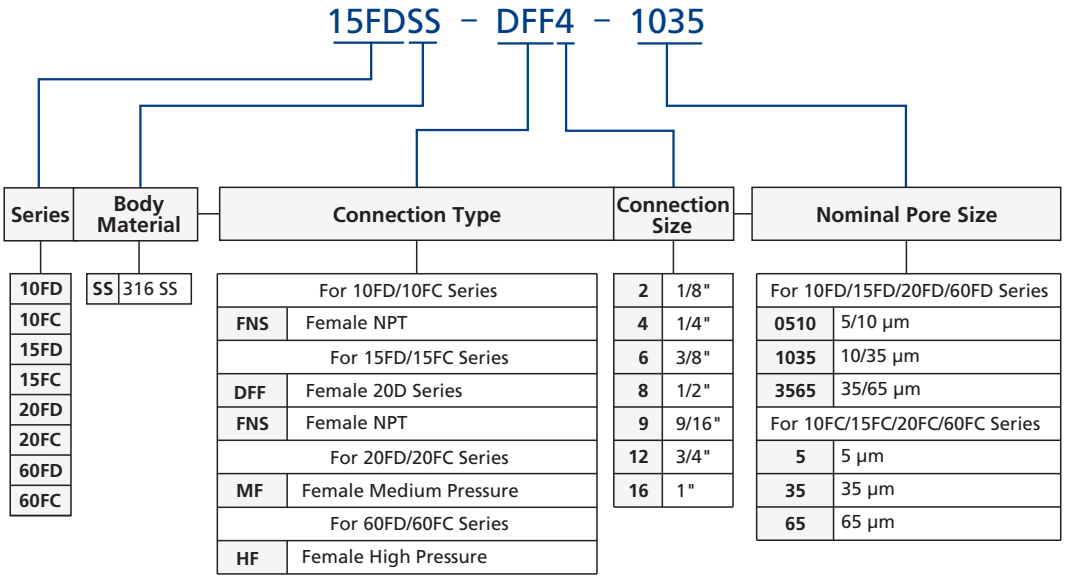

Notes: 1. For more details regarding 20D Series and Medium/High Pressure connections, please see **Connection Information** on A-02.
2. "Ordering Number Description" is a reference to understand the combination rules of FITOK product part number. Not all combinations are available.

Valves

Ball Valves and Pneumatic Ball Valves  E-02

Needle Valves and Pneumatic Needle Valves  E-11

Check Valves  E-51

Metering Valves  E-64

Relief Valves  E-69

Bleed Valves and Block & Bleed Valves  E-81

Ball Valves and Pneumatic Ball Valves

10B Series: 10,000 psig (690 bar)
15B Series: 15,000 psig (1034 bar)
20B Series: 20,000 psig (1379 bar)

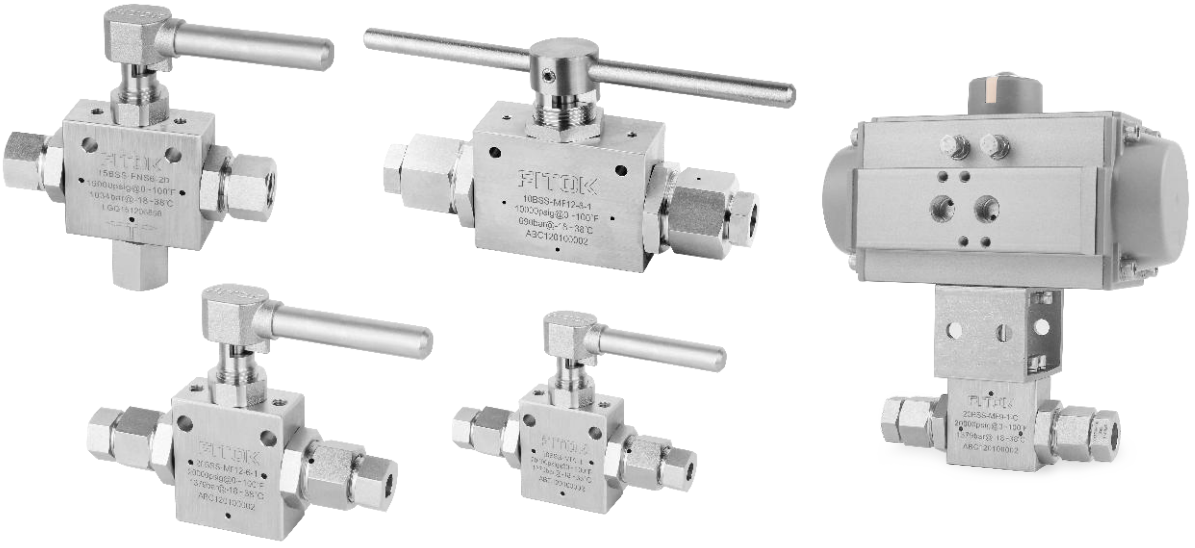

Contents

Features E-04

Working Pressure at Ambient Temperature E-04

Pressure vs. Temperature Curve E-04

Flow Configuration E-04

Standard Materials of Construction E-05

Dimensions E-07

Panel Mounting Dimensions E-07

Ordering Information and Dimensions E-08

Ordering Number Description E-10

Features

- Working pressure up to 20,000 psig (1379 bar)
- Fluorocarbon FKM O-ring for operation from 0°F to 400°F (-17.8°C to 204°C); other O-ring materials available
- PEEK seats offer excellent resistance to chemicals, heat and abrasion
- Trunnion mounted stem design
- Full-port flow path to minimize pressure drop
- 2-way and 3-way valve configurations optional, with bidirectional flow for 2-way valves
- Pneumatic actuator optional with air pressure from 80 psig to 116 psig (5.5 bar to 8 bar)

Working Pressure at Ambient Temperature

Flow Pattern	Orifice		Working Pressure① psig (bar)
	Designator	Dimensions, in. (mm)	
2-Way	4	0.25 (6.35)	20,000 (1379)
	6	0.375 (9.5)	20,000 (1379)
	8	0.5 (12.7)	15,000 (1034)
3-Way	4	0.19 (4.8)	20,000 (1379)
	6	0.33 (8.3)	15,000 (1034)
	8	0.5 (12.7)	10,000 (690)

① The working pressure of NPT connections 1/2" or under is 15,000 psig (1034 bar), while that of NPT connections over 1/2" is 10,000 psig (690 bar).

Pressure vs. Temperature Curve

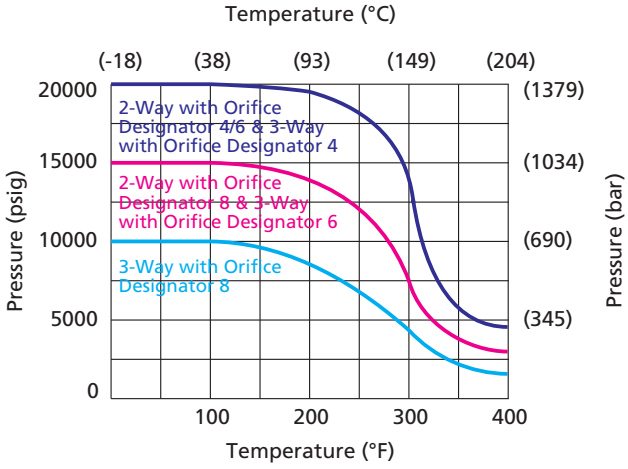

Flow Configuration

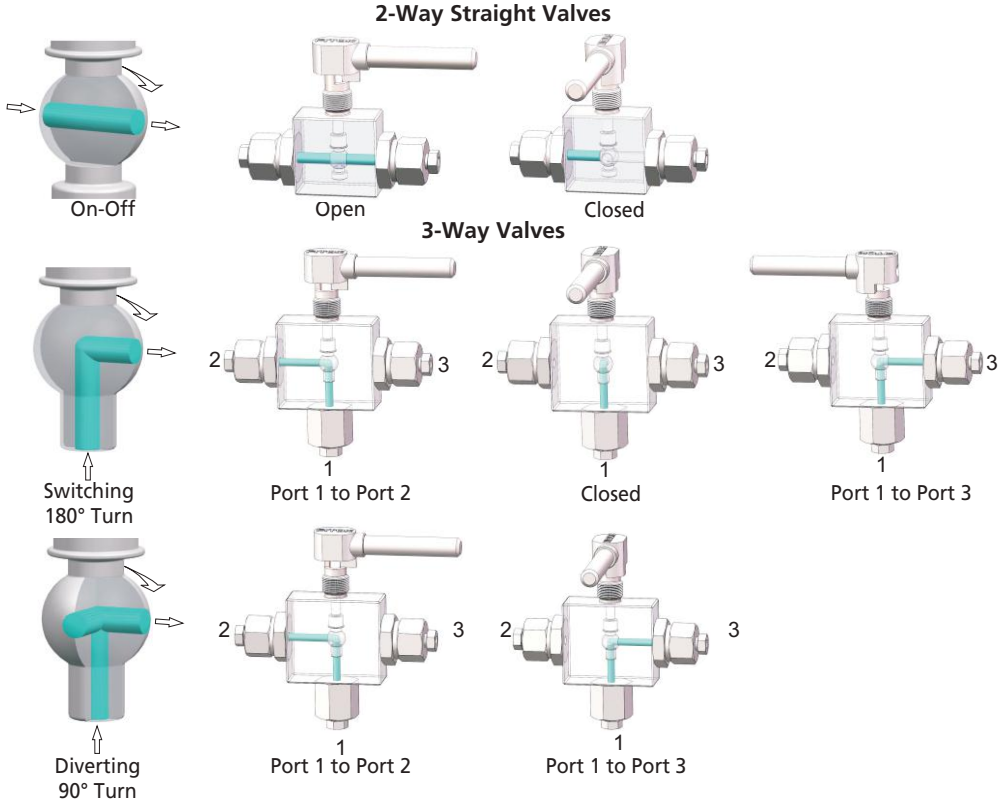

Note: The side connection is not allowed to work as inlet.

Standard Materials of Construction

2-Way Straight Valves

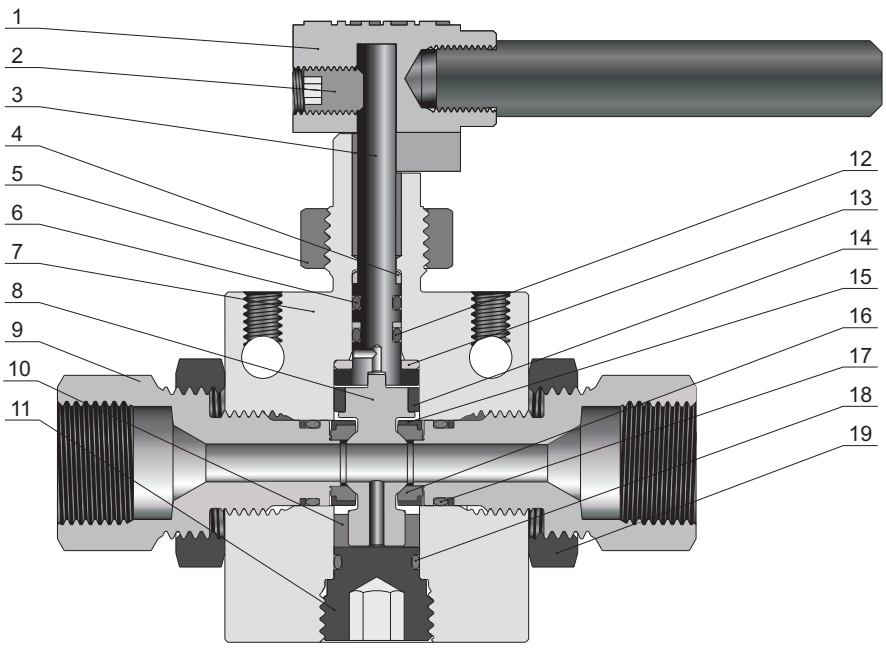

Item	Component	Material Grade
1	Handle	Stainless Steel
2	Set Screw	Stainless Steel
3	*Stem*	*316 SS*
4	Stem Backup	PEEK
5	Panel Nut	316 SS
6	Stem O-Ring	Fluorocarbon FKM
7	*Body*	*316 SS*
8	*Ball*	*316 SS*
9	*Seat Gland*	*316 SS*
10	*Ball Bearing*	*PEEK*
11	*Plug*	*316 SS*
12	*Stem O-Ring*	*Fluorocarbon FKM*
13	*Thrust Washer*	*PEEK*
14	*Ball Bearing*	*PEEK*
15	*Seat Retainer*	*316 SS*
16	*Seat*	*PEEK*
17	*Seat Gland O-Ring*	*Fluorocarbon FKM*
18	*Plug O-Ring*	*Fluorocarbon FKM*
19	Lock Nut	316 SS
	Lubricant	Molybdenum Disulfide/Fluorinated-Based

Wetted components listed in italics.

3-Way Valves

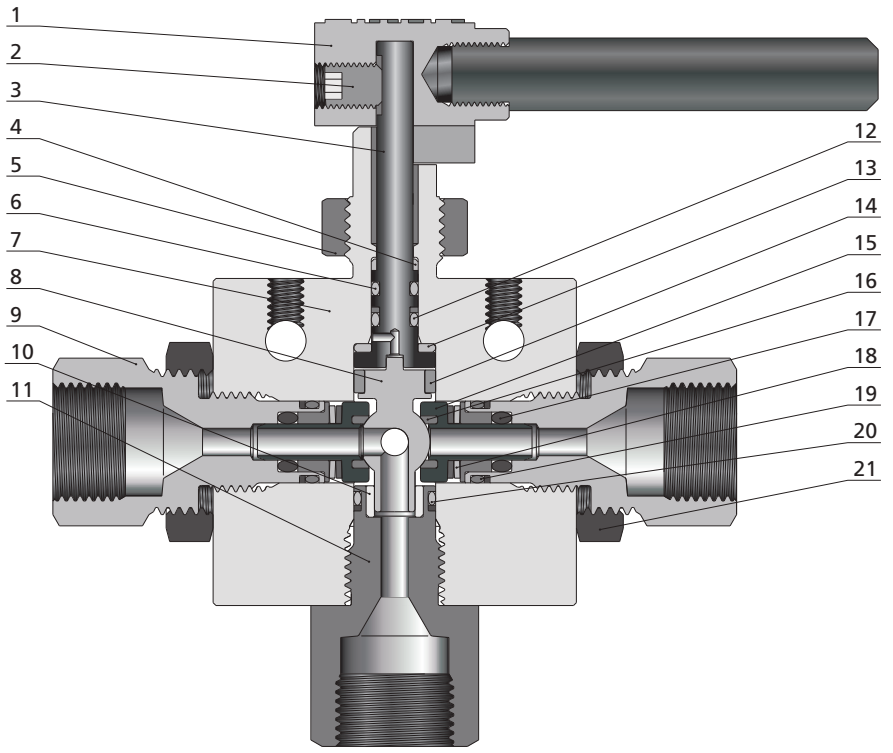

Item	Component	Material Grade
1	Handle	Stainless Steel
2	Set Screw	Stainless Steel
3	Stem	316 SS
4	Stem Backup	PEEK
5	Panel Nut	316 SS
6	Stem O-Ring	Fluorocarbon FKM
7	*Body*	*316 SS*
8	*Ball*	*316 SS*
9	*Seat Gland*	*316 SS*
10	*Ball Bearing*	*Copper Alloy*
11	*Bottom Gland*	*316 SS*
12	*Stem O-Ring*	*Fluorocarbon FKM*
13	*Thrust Washer*	*PEEK*
14	*Ball Bearing*	*PEEK*
15	*Seat Retainer*	*S17400*
16	*Seat*	*Carbon Filled PEEK*
17	*Seat Retainer O-Ring*	*Fluorocarbon FKM*
18	*Belleville Washer*	*S17700*
19	*Seat Gland O-Ring*	*Fluorocarbon FKM*
20	*Bottom Gland O-Ring*	*Fluorocarbon FKM*
21	Lock Nut	316 SS
	Lubricant	Molybdenum Disulfide/Fluorinated-Based

Wetted components listed in italics.

Dimensions

2-Way Straight Valves

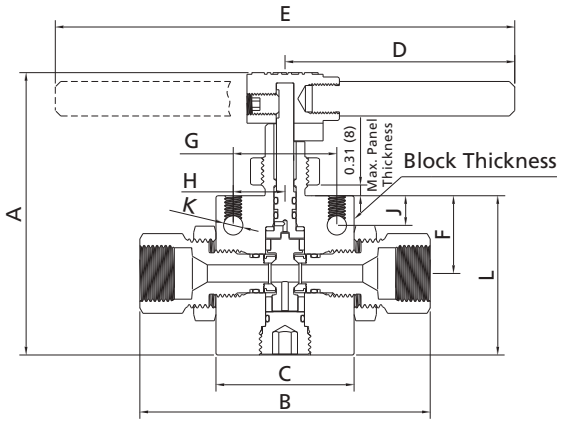

3-Way Valves

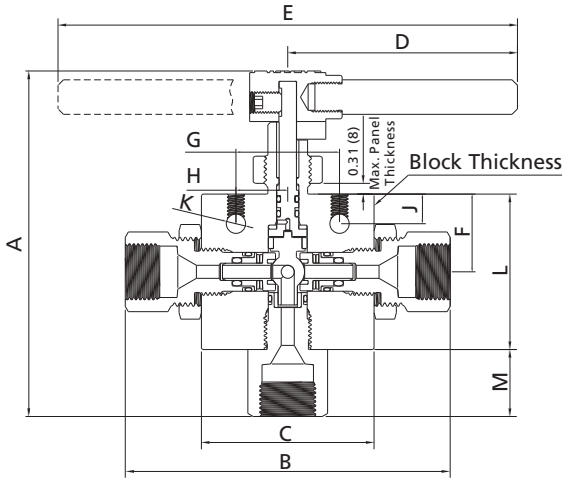

Flow Pattern	Orifice Designator	Dimensions, in. (mm)												
		A	B	C	D	E	F	G	H	J	K	L	M	Block Thickness
2-Way	4	4.09 (103.9)	4.19 (106.5)	2.00 (50.8)	3.33 (84.5)		1.13 (28.6)	1.50 (38.1)	0.75 (19.1)	0.43 (10.9)	0.28 (7.1)	2.31 (58.6)		1.00 (25.4)
	6	4.84 (121.0)	5.53 (140.3)	3.00 (76.2)	4.96 (126.0)		1.38 (34.9)	2.00 (50.8)	1.00 (25.4)	0.41 (10.3)	0.28 (7.1)	2.95 (74.9)		1.38 (34.9)
	8	5.39 (136.8)	7.73 (196.5)	4.12 (104.6)		10.25 (260.0)	1.66 (42.2)	3.00 (76.2)	1.50 (38.1)	0.50 (12.7)	0.28 (7.1)	3.52 (89.4)		1.75 (44.5)
3-Way	4	5.00 (127.0)	4.70 (119.5)	2.50 (63.5)	3.33 (84.5)		1.13 (28.6)	1.50 (38.1)	0.75 (19.1)	0.43 (10.9)	0.28 (7.1)	2.25 (57.2)	0.48 (12.3)	1.00 (25.4)
	6	5.88 (149.3)	5.53 (140.3)	3.00 (76.2)	4.96 (126.0)		1.38 (34.9)	2.00 (50.8)	1.00 (25.4)	0.41 (10.3)	0.28 (7.1)	2.87 (73.0)	1.89 (30.2)	1.38 (34.9)
	8	6.91 (175.6)	7.77 (197.4)	4.12 (104.6)		10.25 (260.0)	1.66 (42.2)	3.00 (76.2)	1.50 (38.1)	0.50 (12.7)	0.28 (7.1)	3.34 (84.9)	1.70 (43.2)	1.75 (44.5)

Note: All dimensions are for reference only and are subject to change.

Panel Mounting Dimensions

Flow Pattern	Orifice Designator	Dimensions, in. (mm)			
		A	B	C	D
2-Way	4	1.50 (38.1)	0.75 (19.1)	0.75 (19.1)	0.28 (7.1)
	6	2.00 (50.8)	1.00 (25.4)	1.13 (28.6)	0.28 (7.1)
	8	3.00 (76.2)	1.50 (38.1)	1.44 (36.5)	0.28 (7.1)
3-Way	4	1.50 (38.1)	0.75 (19.1)	0.75 (19.1)	0.28 (7.1)
	6	2.00 (50.8)	1.00 (25.4)	1.13 (28.6)	0.28 (7.1)
	8	3.00 (76.2)	1.50 (38.1)	1.44 (36.5)	0.28 (7.1)

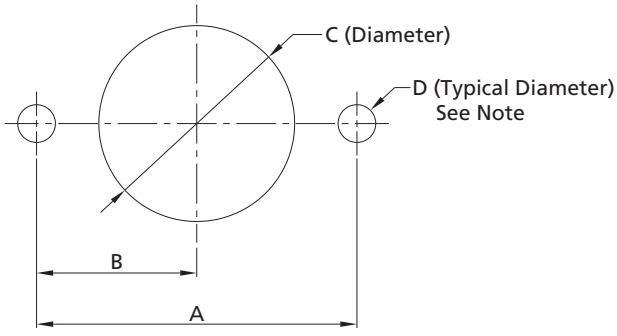

Notes: 1. Body mounting 1/4-20 thread.
2. All dimensions are for reference only and are subject to change.

Ordering Information and Dimensions

Flow Pattern	Orifice Designator	Connection	Orifice Size in. (mm)	Cv	Ordering Number	Working Pressure psig (bar)
2-Way	4	FNS2	0.25 (6.35)	1.51	15BSS-FNS2-4-1	15,000 (1034)
		FNS4	0.25 (6.35)	1.51	15BSS-FNS4-4-1	
		FNS6	0.25 (6.35)	1.51	15BSS-FNS6-4-1	
		FNS8	0.25 (6.35)	1.51	15BSS-FNS8-4-1	
		DFF2	0.094 (2.4)	0.26	15BSS-DFF2-4-1	
		DFF4	0.19 (4.8)	1.27	20BSS-DFF4-4-1	20,000 (1379)
		DFF6	0.25 (6.35)	1.51	20BSS-DFF6-4-1	
		DFF8	0.25 (6.35)	1.51	20BSS-DFF8-4-1	
		MF4	0.11 (2.8)	0.36	20BSS-MF4-4-1	
		MF6	0.2 (5.2)	1.23	20BSS-MF6-4-1	
		MF9	0.25 (6.35)	1.51	20BSS-MF9-4-1	
		HF4	0.094 (2.4)	0.26	20BSS-HF4-4-1	
		HF6	0.125 (3.2)	0.47	20BSS-HF6-4-1	
		HF9	0.19 (4.8)	1.05	20BSS-HF9-4-1	
	6	FNS4	0.375 (9.5)	3.51	15BSS-FNS4-6-1	15,000 (1034)
		FNS6	0.375 (9.5)	3.51	15BSS-FNS6-6-1	
		FNS8	0.375 (9.5)	3.51	15BSS-FNS8-6-1	
		DFF8	0.375 (9.5)	3.51	20BSS-DFF8-6-1	20,000 (1379)
		DFF9	0.375 (9.5)	3.51	20BSS-DFF9-6-1	
		MF6	0.2 (5.2)	1.23	20BSS-MF6-6-1	
		MF9	0.31 (7.9)	2.93	20BSS-MF9-6-1	
		MF12	0.375 (9.5)	3.51	20BSS-MF12-6-1	
	8	FNS12	0.5 (12.7)	10.2	10BSS-FNS12-8-1	10,000 (690)
		FNS16	0.5 (12.7)	10.2	10BSS-FNS16-8-1	
		DFF12	0.5 (12.7)	10.2	15BSS-DFF12-8-1	15,000 (1034)
		MF12	0.5 (12.7)	10.2	15BSS-MF12-8-1	
		MF16	0.5 (12.7)	10.2	15BSS-MF16-8-1	
3-Way	4	FNS2	0.19 (4.8)	0.5	15BSS-FNS2-4-2	15,000 (1034)
					15BSS-FNS2-4-2D	
		FNS4	0.19 (4.8)	0.5	15BSS-FNS4-4-2	
					15BSS-FNS4-4-2D	
		FNS6	0.19 (4.8)	0.5	15BSS-FNS6-4-2	
					15BSS-FNS6-4-2D	
		FNS8	0.19 (4.8)	0.5	15BSS-FNS8-4-2	
					15BSS-FNS8-4-2D	
		DFF2	0.094 (2.4)	0.13	15BSS-DFF2-4-2	
					15BSS-DFF2-4-2D	
		DFF4	0.19 (4.8)	0.5	20BSS-DFF4-4-2	20,000 (1379)
					20BSS-DFF4-4-2D	
		DFF6	0.19 (4.8)	0.5	20BSS-DFF6-4-2	
					20BSS-DFF6-4-2D	
		DFF8	0.19 (4.8)	0.5	20BSS-DFF8-4-2	
					20BSS-DFF8-4-2D	
		MF4	0.11 (2.8)	0.17	20BSS-MF4-4-2	
					20BSS-MF4-4-2D	
		MF6	0.19 (4.8)	0.5	20BSS-MF6-4-2	
					20BSS-MF6-4-2D	
		MF9	0.19 (4.8)	0.5	20BSS-MF9-4-2	
					20BSS-MF9-4-2D	

Ordering Information and Dimensions (continued)

Flow Pattern	Orifice Designator	Connection	Orifice Size in. (mm)	Cv	Ordering Number	Working Pressure psig (bar)
3-Way	4	HF4	0.094 (2.4)	0.13	20BSS-HF4-4-2	20,000 (1379)
					20BSS-HF4-4-2D	
		HF6	0.125 (3.2)	0.22	20BSS-HF6-4-2	
					20BSS-HF6-4-2D	
		HF9	0.19 (4.8)	0.5	20BSS-HF9-4-2	
					20BSS-HF9-4-2D	
	6	FNS4	0.33 (8.3)	2.1	15BSS-FNS4-6-2	15,000 (1034)
					15BSS-FNS4-6-2D	
		FNS6	0.33 (8.3)	2.1	15BSS-FNS6-6-2	
					15BSS-FNS6-6-2D	
		FNS8	0.33 (8.3)	2.1	15BSS-FNS8-6-2	
					15BSS-FNS8-6-2D	
		DFF8	0.33 (8.3)	2.1	15BSS-DFF8-6-2	
					15BSS-DFF8-6-2D	
		DFF9	0.33 (8.3)	2.1	15BSS-DFF9-6-2	
					15BSS-DFF9-6-2D	
		MF6	0.2 (5.2)	0.81	15BSS-MF6-6-2	
					15BSS-MF6-6-2D	
		MF9	0.31 (7.9)	1.9	15BSS-MF9-6-2	
					15BSS-MF9-6-2D	
		MF12	0.33 (8.3)	2.1	15BSS-MF12-6-2	
					15BSS-MF12-6-2D	
	8	FNS12	0.5 (12.7)	4.4	10BSS-FNS12-8-2	10,000 (690)
					10BSS-FNS12-8-2D	
		FNS16	0.5 (12.7)	4.4	10BSS-FNS16-8-2	
					10BSS-FNS16-8-2D	
		MF12	0.5 (12.7)	4.4	10BSS-MF12-8-2	
					10BSS-MF12-8-2D	
		MF16	0.5 (12.7)	4.4	10BSS-MF16-8-2	
					10BSS-MF16-8-2D	

Ordering Number Description

15BSS – MF6 – 6B– 2 – C – CE

Series	Body Material	Connection Type	Connection Size	Orifice Designator	O-Ring Material	Flow Pattern	Pneumatic Actuator	CE Certified
10B	SS 316 SS	DFF Female 20D Series	2 1/8"	For 2-Way	Fluorocarbon FKM	1 2-Way Straight Valves	None	None
15B		MF Female Medium Pressure	4 1/4"	4 0.25 in. (6.35 mm)	B NBR	2 3-Way Valves, 180° Turn	C 90° Normally Closed Pneumatic Actuator	CE CE Certified
20B		FNS Female NPT	6 3/8"	6 0.375 in. (9.5 mm)		2D 3-Way Valves, 90° Turn	O 90° Normally Open Pneumatic Actuator	
		HF Female High Pressure	8 1/2"	8 0.5 in. (12.7 mm)			D 90° Double Acting Pneumatic Actuator	
			9 9/16"	For 3-Way			DX 180° Double Acting Pneumatic Actuator	
			12 3/4"	4 0.19 in. (4.8 mm)				
			16 1"	6 0.33 in. (8.3 mm)				
				8 0.5 in. (12.7 mm)				

Designator	O-Ring Material	Working Temperature Range, °F (°C)
	Fluorocarbon FKM	0 to 400 (-17.8 to 204)
B	NBR	-10 to 250 (-23 to 121)

Notes: 1. For more details regarding 20D Series and Medium/High Pressure connections, please see **Connection Information** on A-02.
2. "Ordering Number Description" is a reference to understand the combination rules of FITOK product part number. Not all combinations are available.

Needle Valves and Pneumatic Needle Valves

10N Series: 10,000 psig (690 bar)
15N Series: 15,000 psig (1034 bar)
20N Series: 20,000 psig (1379 bar)
30N Series: 30,000 psig (2068 bar)
60N Series: 60,000 psig (4137 bar)



Contents

Mounting Instructions

E-13

Needle Valves

10N Series: 10,000 psig (690 bar) E-14

15N Series: 15,000 psig (1034 bar) E-20

20N Series: 20,000 psig (1379 bar) E-27

30N Series: 30,000 psig (2068 bar) E-32

60N Series: 60,000 psig (4137 bar) E-36

Pneumatic Needle Valves

Piston Style Air to Open (Normally Closed) E-40

Piston Style Air to Close (Normally Open) E-46

Ordering Number Description

E-50

Stem Types

E-50

Notes:

◎ Packing adjustment may be required during the service life of the valve

◎ For better quality maintenance, FITOK instrumentation needle valves should be kept in half open position in warehouse

Mounting Instructions

Bracket or panel mounting options are available, as illustrated below. For dimensions M, G, and G1, refer to the Ordering Information and Dimensions section.

Bracket Mounting

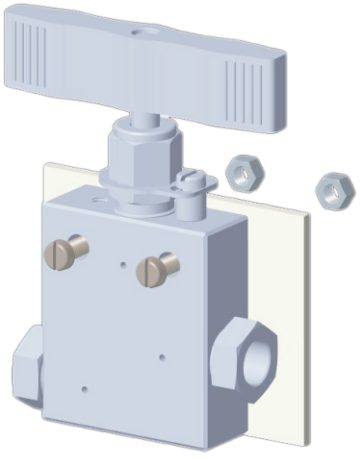

Bracket Mounting Schematic

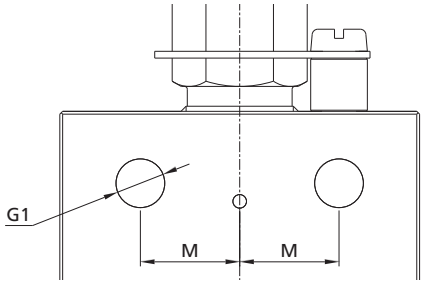

Panel Mounting

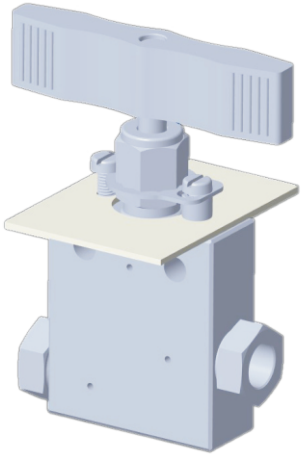

Panel Mounting Schematic

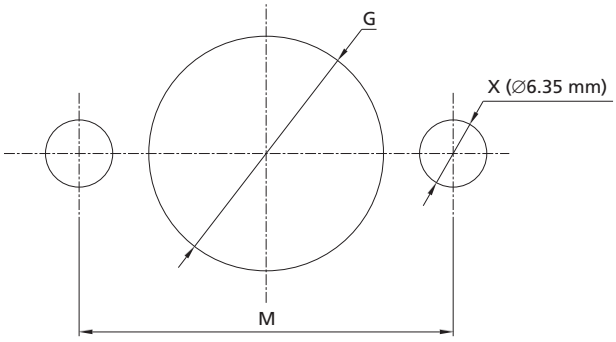

Needle Valves

10N Series: 10,000 psig (690 bar)

Features

- ◎ High tensile 316 stainless steel for the valve body and S17400 stainless steel for lower stem
- ◎ Metal-to-metal seating to achieve ideal shutoff, longer stem/seat service lifetime for abrasive flow, excellent corrosion resistance and greater durability for repeated on/off cycles
- ◎ Non-rotating stem and bar stock body design
- ◎ Easy to assemble and replace packing
- ◎ Reliable packing gland locking device
- ◎ Options for Vee or Regulating stem tips
- ◎ Five flow patterns available

Technical Data

Connection Size	Connection	Orifice in. (mm)	Cv	Working Pressure psig (bar)	Working Temperature Range
9/16" Female Medium Pressure	MF9	0.359 (9.12)	1.75	10,000 (690)	-100°F~1200°F (-73°C~649°C)
3/4" Female Medium Pressure	MF12	0.516 (13.10)	2.80	10,000 (690)	
1" Female Medium Pressure	MF16	0.688 (17.48)	5.20	10,000 (690)	
3/4" Female NPT	FNS12	0.437 (11.10)	2.50	10,000 (690)	-100°F~400°F (-73°C~204°C)
3/4" Female ISO Tapered Thread	FRT12				
1" Female NPT	FNS16	0.562 (14.27)	4.40	10,000 (690)	
1" Female ISO Tapered Thread	FRT16				

Notes: 1. Cv values shown are for 2-way straight valve pattern. For 2-way angle pattern, increase Cv value by about 50% (based on water).

2. Packing Options
PTFE is the standard packing material, RPTFE glass, graphite and extended stuffing box with graphite also available. Graphite packing not recommended for hydrogen or helium service.
PTFE: -100°F~450°F (-73°C~232°C)
RPTFE glass: -100°F~600°F (-73°C~316°C)
Graphite: 0°F~800°F (-17.8°C~427°C)
Extended stuffing box with graphite: 0°F~1200°F (-17.8°C~649°C)

Flow Data at 100°F (38°C)

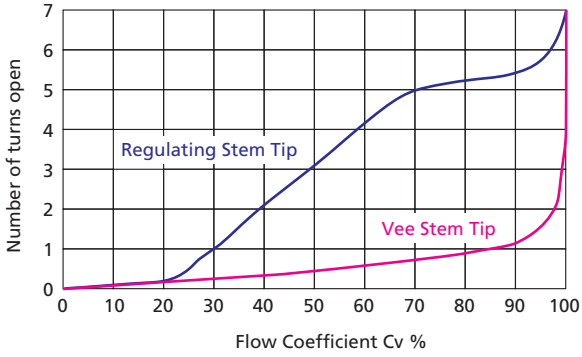

Pressure vs. Temperature Curve

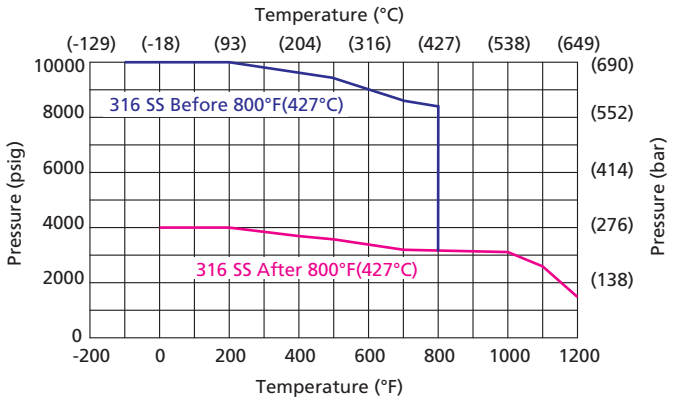

Note: When temperature exceeds 800°F (427°C), use the pink curve as its cold-worked rating for future operating of the components.

Standard Materials of Construction

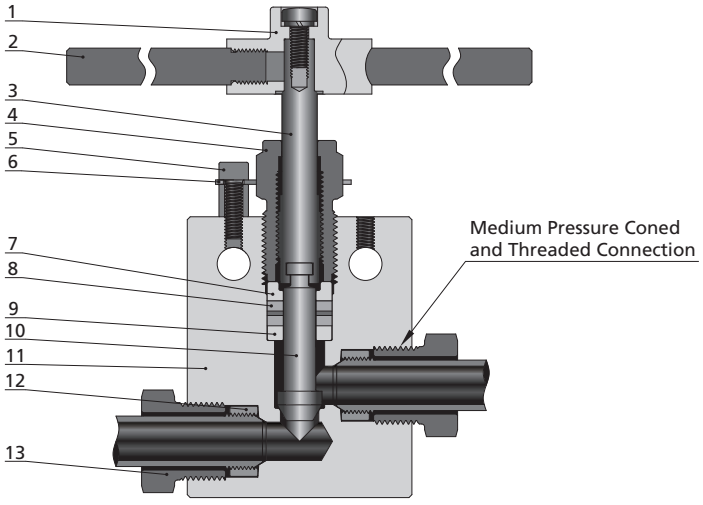

Item	Component	Material Grade
1	Handle Head	Stainless Steel
2	Handle	Stainless Steel
3	Upper Stem	316 SS
4	Packing Gland	C63000
5	Locking Screw	Stainless Steel
6	Locking Plate	304 SS
7	Packing Ring	C63000
8	*Packing*	*PTFE/RPTFE Glass/Graphite/Extended Stuffing Box with Graphite*
9	*Packing Washer*	*S17400*
10	*Lower Stem*	*S17400*
11	*Body*	*316 SS*
12	Collar	316 SS (For Tubing Connections)
13	Gland	316 SS (For Tubing Connections)
	Lubricant	Molybdenum Disulfide

Wetted component listed in italics.

FITOK

Ordering Information and Dimensions (Tubing Connection, 2-Way)

Straight

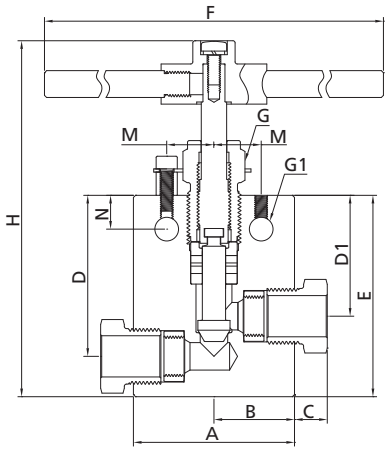

Angle

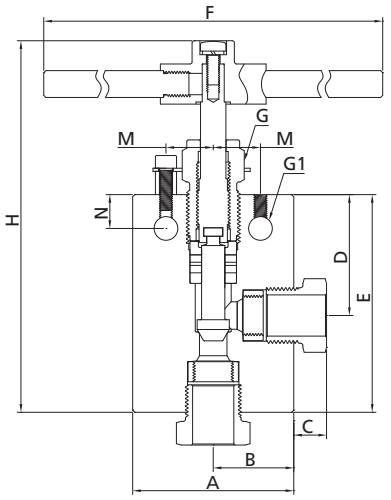

Angle (replaceable seat)

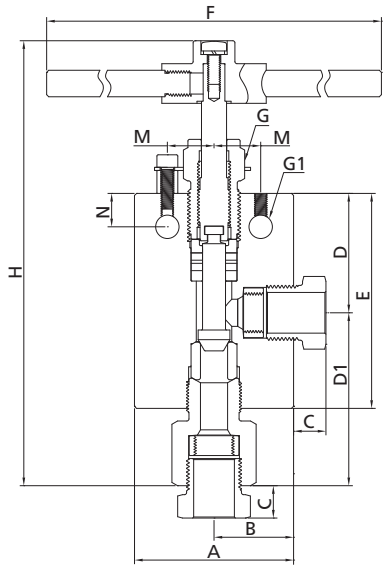

Straight

Ordering Number	Connection	Orifice in. (mm)	Dimensions, in. (mm)												
			A	B	C	D	D1	E	F	G	G1	H	M	N	Thickness
10NSS-MF9-1	MF9	0.359 (9.12)	2.50 (63.5)	1.25 (31.8)	0.55 (14.0)	2.38 (60.5)	1.75 (44.5)	2.88 (73.2)	4.00 (101.6)	1.00 (25.4)	0.34 (8.6)	6.20 (157.4)	0.69 (17.5)	0.50 (12.7)	1.00 (25.4)
10NSS-MF12-1	MF12	0.516 (13.11)	3.00 (76.2)	1.50 (38.1)	0.60 (15.2)	3.00 (76.2)	2.25 (57.2)	3.75 (95.3)	10.25 (260.4)	1.19 (30.2)	0.44 (11.2)	7.24 (183.8)	0.88 (22.4)	0.63 (16.0)	1.38 (35.1)
10NSS-MF16-1	MF16	0.688 (17.48)	4.12 (104.6)	2.06 (52.3)	0.74 (18.7)	3.75 (95.3)	2.81 (71.4)	4.63 (117.6)	10.25 (260.4)	1.62 (41.2)	0.56 (14.2)	9.33 (237.1)	1.25 (31.8)	1.13 (28.7)	1.75 (44.5)

Angle

Ordering Number	Connection	Orifice in. (mm)	Dimensions, in. (mm)												
			A	B	C	D	D1	E	F	G	G1	H	M	N	Thickness
10NSS-MF9-2	MF9	0.359 (9.12)	2.50 (63.5)	1.25 (31.8)	0.55 (14.0)	1.75 (44.5)		3.38 (85.9)	4.00 (101.6)	1.00 (25.4)	0.34 (8.6)	6.70 (170.3)	0.69 (17.5)	0.50 (12.7)	1.00 (25.4)
10NSS-MF12-2	MF12	0.516 (13.11)	3.00 (76.2)	1.50 (38.1)	0.60 (15.2)	2.25 (57.2)		4.25 (107.9)	10.25 (260.4)	1.19 (30.2)	0.44 (11.2)	7.73 (196.4)	0.88 (22.4)	0.63 (16.0)	1.38 (35.1)
10NSS-MF16-2	MF16	0.688 (17.48)	4.12 (104.6)	2.06 (52.3)	0.74 (18.7)	2.81 (71.4)		5.12 (130.1)	10.25 (260.4)	1.62 (41.2)	0.56 (14.2)	9.95 (252.6)	1.25 (31.8)	1.13 (28.7)	1.75 (44.5)

Angle (replaceable seat)

Ordering Number	Connection	Orifice in. (mm)	Dimensions, in. (mm)												
			A	B	C	D	D1	E	F	G	G1	H	M	N	Thickness
10NSS-MF9-3	MF9	0.359 (9.12)	2.50 (63.5)	1.25 (31.8)	0.55 (14.0)	1.75 (44.5)	2.50 (63.5)	3.38 (85.9)	4.00 (101.6)	1.00 (25.4)	0.34 (8.6)	7.57 (192.4)	0.69 (17.5)	0.50 (12.7)	1.00 (25.4)
10NSS-MF12-3	MF12	0.516 (13.11)	3.00 (76.2)	1.50 (38.1)	0.60 (15.2)	2.25 (57.2)	3.19 (81.1)	4.25 (107.9)	10.25 (260.4)	1.19 (30.2)	0.44 (11.2)	8.92 (226.8)	0.88 (22.4)	0.63 (16.0)	1.38 (35.1)
10NSS-MF16-3	MF16	0.688 (17.48)	4.12 (104.6)	2.06 (52.3)	0.74 (18.7)	2.81 (71.4)	4.11 (104.5)	5.25 (133.3)	10.25 (260.4)	1.62 (41.2)	0.56 (14.2)	11.62 (295.4)	1.25 (31.8)	1.13 (28.7)	1.75 (44.5)

Ordering Information and Dimensions (Tubing Connection, 3-Way)

2 on pressure

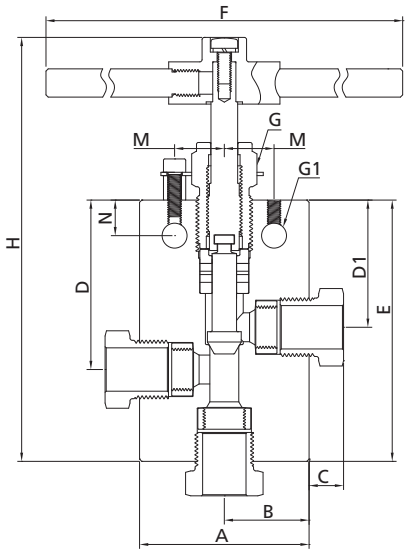

1 on pressure

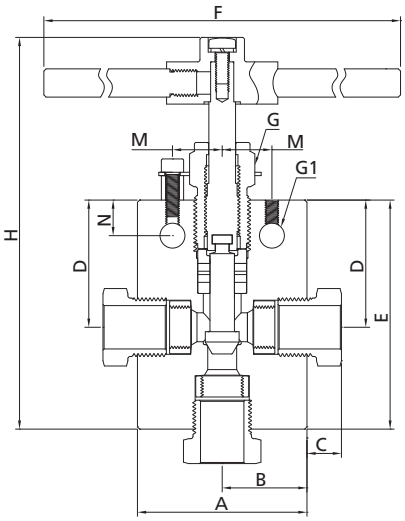

2 stem manifold

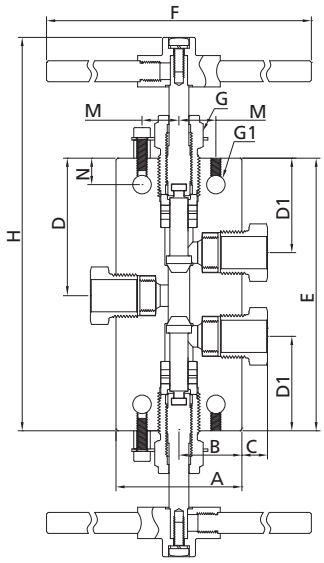

2 on pressure

Ordering Number	Connection	Orifice in. (mm)	Dimensions, in. (mm)												
			A	B	C	D	D1	E	F	G	G1	H	M	N	Thickness
10NSS-MF9-4	MF9	0.359 (9.12)	2.50 (63.5)	1.25 (31.8)	0.55 (14.0)	2.38 (60.5)	1.75 (44.5)	3.63 (92.1)	4.00 (101.6)	1.00 (25.4)	0.34 (8.6)	6.95 (176.5)	0.69 (17.5)	0.50 (12.7)	1.00 (25.4)
10NSS-MF12-4	MF12	0.516 (13.11)	3.00 (76.2)	1.50 (38.1)	0.60 (15.2)	3.00 (76.2)	2.25 (57.2)	4.63 (117.5)	10.25 (260.4)	1.19 (30.2)	0.44 (11.2)	8.11 (206.0)	0.88 (22.4)	0.63 (16.0)	1.38 (35.1)
10NSS-MF16-4	MF16	0.688 (17.48)	4.12 (104.6)	2.06 (52.3)	0.74 (18.7)	3.75 (95.3)	2.81 (71.4)	5.88 (149.4)	10.25 (260.4)	1.62 (41.2)	0.56 (14.2)	10.58 (268.7)	1.25 (31.8)	1.13 (28.7)	1.75 (44.5)

1 on pressure

Ordering Number	Connection	Orifice in. (mm)	Dimensions, in. (mm)												
			A	B	C	D	D1	E	F	G	G1	H	M	N	Thickness
10NSS-MF9-5	MF9	0.359 (9.12)	2.50 (63.5)	1.25 (31.8)	0.55 (14.0)	1.75 (44.5)		3.38 (85.9)	4.00 (101.6)	1.00 (25.4)	0.34 (8.6)	6.70 (170.3)	0.69 (17.5)	0.50 (12.7)	1.00 (25.4)
10NSS-MF12-5	MF12	0.516 (13.11)	3.00 (76.2)	1.50 (38.1)	0.60 (15.2)	2.25 (57.2)		4.25 (107.9)	10.25 (260.4)	1.19 (30.2)	0.44 (11.2)	7.73 (196.4)	0.88 (22.4)	0.63 (16.0)	1.38 (35.1)
10NSS-MF16-5	MF16	0.688 (17.48)	4.12 (104.6)	2.06 (52.3)	0.74 (18.7)	2.81 (71.4)		5.12 (130.1)	10.25 (260.4)	1.62 (41.2)	0.56 (14.2)	9.95 (252.6)	1.25 (31.8)	1.13 (28.7)	1.75 (44.5)

2 stem manifold

Ordering Number	Connection	Orifice in. (mm)	Dimensions, in. (mm)												
			A	B	C	D	D1	E	F	G	G1	H	M	N	Thickness
10NSS-MF9-6	MF9	0.359 (9.12)	2.50 (63.5)	1.25 (31.8)	0.55 (14.0)	2.56 (65.1)	1.75 (44.5)	5.13 (130.2)	4.00 (101.6)	1.00 (25.4)	0.34 (8.6)	8.45 (214.6)	0.69 (17.5)	0.50 (12.7)	1.00 (25.4)
10NSS-MF12-6	MF12	0.516 (13.11)	3.00 (76.2)	1.50 (38.1)	0.60 (15.2)	3.25 (82.6)	2.25 (57.2)	6.50 (165.1)	10.25 (260.4)	1.19 (30.2)	0.44 (11.2)	9.98 (253.5)	0.88 (22.4)	0.63 (16.0)	1.38 (35.1)
10NSS-MF16-6	MF16	0.688 (17.48)	4.12 (104.6)	2.06 (52.3)	0.74 (18.7)	3.75 (95.3)	2.81 (71.4)	7.50 (190.5)	10.25 (260.4)	1.62 (41.2)	0.56 (14.2)	12.20 (310.1)	1.25 (31.8)	1.13 (28.7)	1.75 (44.5)

Ordering Information and Dimensions (Pipe Connection, 2-Way)

Straight

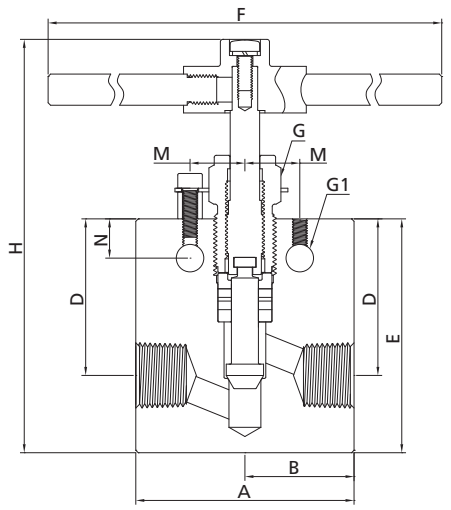

Angle

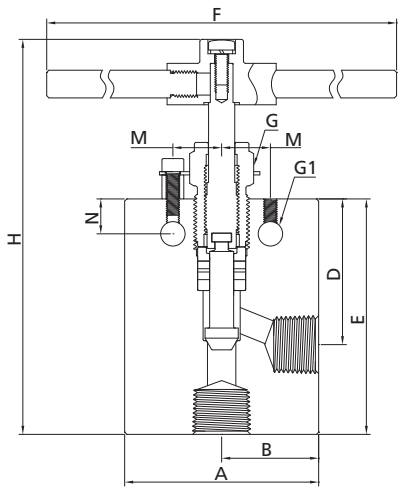

Straight

Ordering Number	Connection	Orifice in. (mm)	Dimensions, in. (mm)												
			A	B	C	D	D1	E	F	G	G1	H	M	N	Thickness
10NSS-FNS12-1	FNS12	0.437 (11.10)	3.50 (88.9)	1.75 (44.5)		2.63 (66.8)		3.75 (95.3)	10.25 (260.4)	1.19 (30.2)	0.44 (11.2)	7.42 (188.6)	0.88 (22.4)	0.63 (16.0)	1.75 (44.5)
10NSS-FRT12-1	FRT12														
10NSS-FNS16-1	FNS16	0.562 (14.27)	4.12 (104.6)	2.06 (52.3)		3.31 (84.1)		4.62 (117.4)	10.25 (260.4)	1.62 (41.2)	0.56 (14.2)	9.45 (240.1)	1.25 (31.8)	1.13 (28.7)	1.75 (44.5)
10NSS-FRT16-1	FRT16														

Angle

Ordering Number	Connection	Orifice in. (mm)	Dimensions, in. (mm)												
			A	B	C	D	D1	E	F	G	G1	H	M	N	Thickness
10NSS-FNS12-2	FNS12	0.437 (11.10)	3.50 (88.9)	1.75 (44.5)		2.63 (66.8)		4.25 (107.9)	10.25 (260.4)	1.19 (30.2)	0.44 (11.2)	7.92 (201.3)	0.88 (22.4)	0.63 (16.0)	1.75 (44.5)
10NSS-FRT12-2	FRT12														
10NSS-FNS16-2	FNS16	0.562 (14.27)	4.12 (104.6)	2.06 (52.3)		3.31 (84.1)		5.12 (130.1)	10.25 (260.4)	1.64 (41.2)	0.56 (14.2)	9.94 (252.5)	1.25 (31.8)	1.13 (28.7)	1.75 (44.5)
10NSS-FRT16-2	FRT16														

Ordering Information and Dimensions (Pipe Connection, 3-Way)

2 on pressure

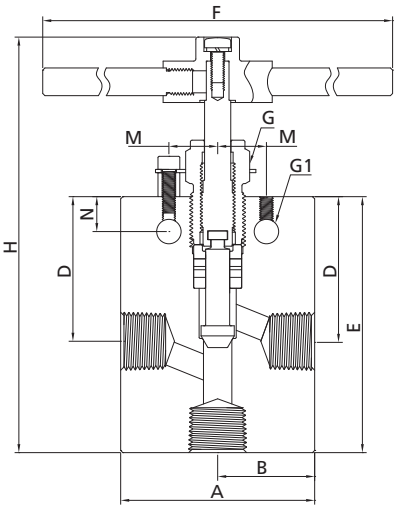

1 on pressure

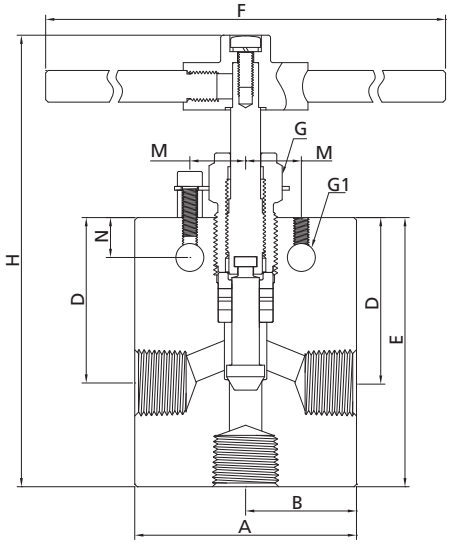

2 stem manifold

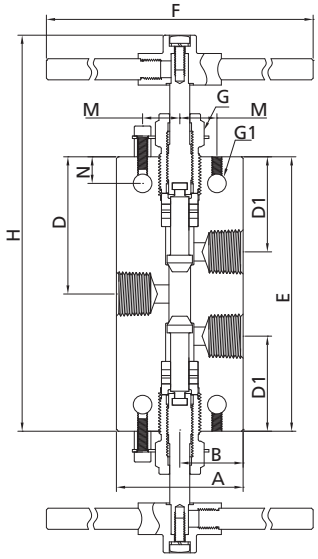

2 on pressure

Ordering Number	Connection	Orifice in. (mm)	Dimensions, in. (mm)												
			A	B	C	D	D1	E	F	G	G1	H	M	N	Thickness
10NSS-FNS12-4	FNS12	0.437 (11.10)	3.50 (88.9)	1.75 (44.5)		2.63 (66.8)		4.62 (117.4)	10.25 (260.4)	1.19 (30.2)	0.44 (11.2)	8.40 (213.4)	0.88 (22.4)	0.63 (16.0)	1.75 (44.5)
10NSS-FRT12-4	FRT12														
10NSS-FNS16-4	FNS16	0.562 (14.27)	4.12 (104.6)	2.06 (52.3)		3.31 (84.1)		5.88 (149.4)	10.25 (260.4)	1.64 (41.2)	0.56 (14.2)	10.70 (271.7)	1.25 (31.8)	1.13 (28.7)	1.75 (44.5)
10NSS-FRT16-4	FRT16														

1 on pressure

Ordering Number	Connection	Orifice in. (mm)	Dimensions, in. (mm)												
			A	B	C	D	D1	E	F	G	G1	H	M	N	Thickness
10NSS-FNS12-5	FNS12	0.437 (11.10)	3.50 (88.9)	1.75 (44.5)		2.63 (66.8)		4.25 (107.9)	10.25 (260.4)	1.19 (30.2)	0.44 (11.2)	7.92 (201.3)	0.88 (22.4)	0.63 (16.0)	1.75 (44.5)
10NSS-FRT12-5	FRT12														
10NSS-FNS16-5	FNS16	0.562 (14.27)	4.12 (104.6)	2.06 (52.3)		3.31 (84.1)		5.12 (130.1)	10.25 (260.4)	1.62 (41.2)	0.56 (14.2)	9.94 (252.5)	1.25 (31.8)	1.13 (28.7)	1.75 (44.5)
10NSS-FRT16-5	FRT16														

2 stem manifold

Ordering Number	Connection	Orifice in. (mm)	Dimensions, in. (mm)												
			A	B	C	D	D1	E	F	G	G1	H	M	N	Thickness
10NSS-FNS12-6	FNS12	0.437 (11.10)	3.50 (88.9)	1.75 (44.5)		3.25 (82.6)	2.25 (57.2)	6.50 (165.1)	10.25 (260.4)	1.19 (30.2)	0.44 (11.2)	10.28 (261.2)	0.88 (22.4)	0.63 (16.0)	1.75 (44.5)
10NSS-FRT12-6	FRT12														
10NSS-FNS16-6	FNS16	0.562 (14.27)	4.12 (104.6)	2.06 (52.3)		3.75 (95.3)	2.81 (71.42)	7.50 (190.5)	10.25 (260.4)	1.62 (41.2)	0.56 (14.2)	12.32 (313.0)	1.25 (31.8)	1.13 (28.7)	1.75 (44.5)
10NSS-FRT16-6	FRT16														

Notes: 1. G is the drill dimension of packing gland mounting hole.
2. G1 is the dimension of bracket mounting hole.
3. Panel mounting drill size: 0.25" all valves.
4. H is the dimension of stem in closed position.
5. All dimensions are for reference only and subject to change. For dimensions not shown above, please contact FITOK group or our authorized distributors.

15N Series: 15,000 psig (1034 bar)

Features

- ◎ High tensile 316 stainless steel for valve body and S17400 stainless steel for lower stem
- ◎ Metal-to-metal seating achieves ideal shutoff, longer stem/seat service lifetime for abrasive flow, excellent corrosion resistance and greater durability for repeated on/off cycles
- ◎ Non-rotating stem and bar stock body design
- ◎ Easy to assemble and replace packing
- ◎ Reliable locking for packing gland
- ◎ Options for Vee or Regulating stem tips
- ◎ Five flow patterns available

Technical Data

Connection Size	Connection	Orifice in. (mm)	Cv	Working Pressure psig (bar)	Working Temperature Range
1/8" Female 20D Series Tube Fitting	DFF2	0.094 (2.39)	0.12	15, 000 (1034)	-100°F~800°F (-73°C~427°C)
1/4" Female 20D Series Tube Fitting	DFF4	0.188 (4.77)	0.65	15, 000 (1034)	
3/8" Female 20D Series Tube Fitting	DFF6	0.250 (6.35)	0.95	15, 000 (1034)	
1/2" Female 20D Series Tube Fitting	DFF8	0.375 (9.53)	1.90	15, 000 (1034)	
1/8" Female NPT	FNS2	0.078 (1.98)	0.11	15, 000 (1034)	-100°F~400°F (-73°C~204°C)
1/8" Female ISO Tapered Thread	FRT2				
1/4" Female NPT	FNS4	0.203 (5.16)	0.63	15, 000 (1034)	
1/4" Female ISO Tapered Thread	FRT4				
3/8" Female NPT	FNS6	0.219 (5.56)	0.75	15, 000 (1034)	
3/8" Female ISO Tapered Thread	FRT6				
1/2" Female NPT	FNS8	0.312 (7.92)	1.30	15, 000 (1034)	
1/2" Female ISO Tapered Thread	FRT8				

Notes: 1. Cv values shown are for 2-way straight valve pattern. For 2-way angle pattern, increase Cv value by 50% (based on water).

2. Packing Options
   PTFE is the standard packing material, RPTFE glass and graphite also available. Graphite packing not recommended for hydrogen or helium service.
   PTFE: -100°F~450°F (-73°C~232°C)
   RPTFE glass: -100°F~600°F (-73°C~316°C)
   Graphite: 0°F~800°F (-17.8°C~427°C)

Flow Data at 100°F (38°C)

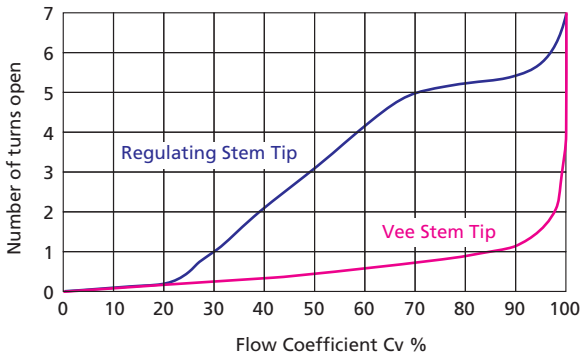

Pressure vs. Temperature Curve

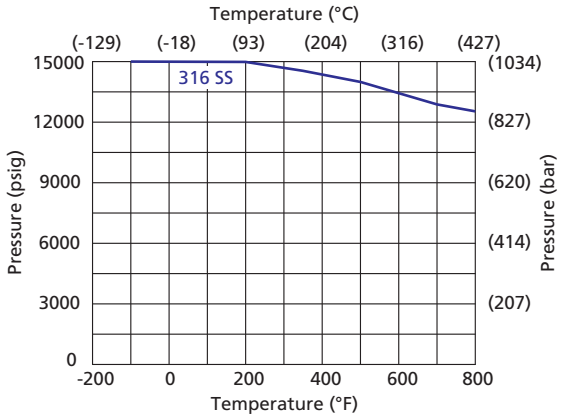

Standard Materials of Construction

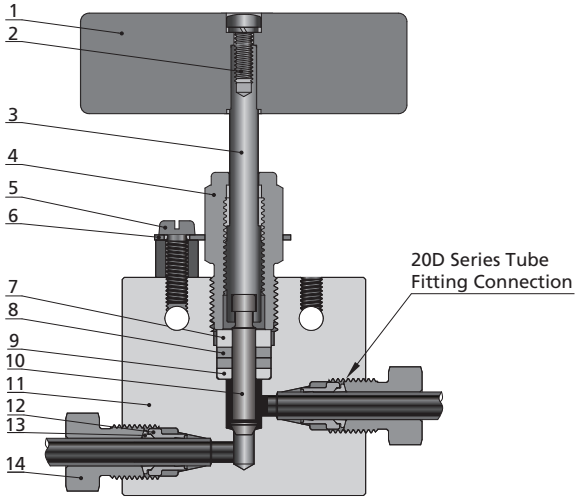

Item	Component	Material Grade
1	Handle	Stainless Steel
2	Handle Screw	Stainless Steel
3	Upper Stem	316 SS
4	Packing Gland	C63000
5	Locking Screw	Stainless Steel
6	Locking Plate	304 SS
7	Packing Ring	C63000
8	*Packing*	*PTFE/RPTFE/Graphite*
9	*Packing Washer*	*S17400*
10	*Lower Stem*	*S17400*
11	*Body*	*316 SS*
12	*Front Ferrule*	*316 SS (For Tubing Connections)*
13	Rear Ferrule	316 SS (For Tubing Connections)
14	Nut	316 SS (For Tubing Connections)
	Lubricant	Molybdenum Disulfide

Wetted component listed in italics.

FITOK

Ordering Information and Dimensions (Tubing Connection, 2-Way)

Straight

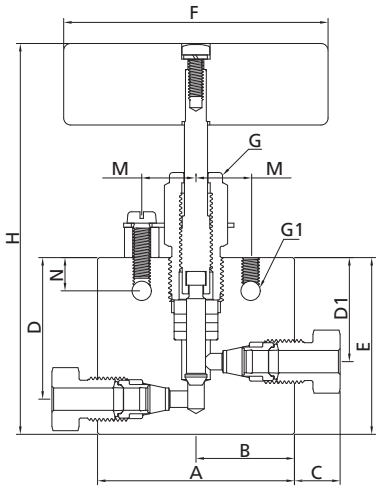

Angle

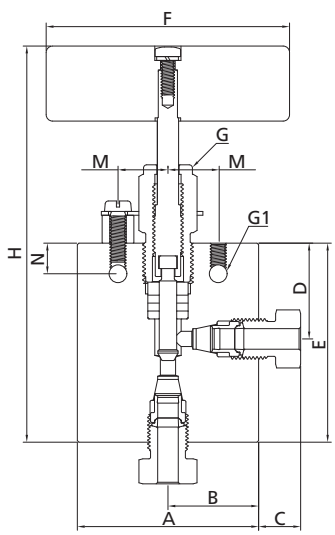

Angle (replaceable seat)

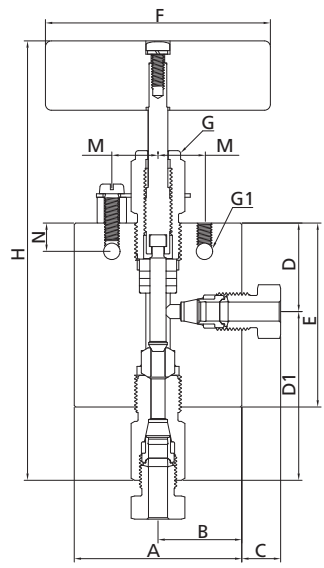

Straight

Ordering Number	Connection	Orifice in. (mm)	Dimensions, in. (mm)												
			A	B	C	D	D1	E	F	G	G1	H	M	N	Thickness
15NSS-DFF2-1	DFF2	0.094 (2.39)	1.81 (46.1)	0.91 (23.1)	0.44 (11.2)	1.06 (27.0)	0.81 (20.6)	1.38 (35.0)	1.75 (44.5)	0.62 (15.8)	0.17 (4.3)	3.13 (79.6)	0.56 (14.2)	0.31 (7.9)	0.62 (15.8)
15NSS-DFF4-1	DFF4	0.188 (4.77)	2.33 (59.2)	1.17 (29.6)	0.52 (13.3)	1.62 (41.2)	1.19 (30.2)	2.00 (50.8)	3.00 (76.2)	0.75 (19.1)	0.22 (5.6)	4.90 (124.5)	0.62 (15.8)	0.38 (9.7)	0.75 (19.1)
15NSS-DFF6-1	DFF6	0.250 (6.35)	2.27 (57.6)	1.13 (28.8)	0.54 (13.6)	1.62 (41.2)	1.19 (30.2)	2.00 (50.8)	3.00 (76.2)	0.75 (19.1)	0.22 (5.6)	4.97 (126.3)	0.62 (15.8)	0.38 (9.7)	0.75 (19.1)
15NSS-DFF8-1	DFF8	0.375 (9.53)	2.86 (72.7)	1.43 (36.4)	0.60 (15.3)	2.37 (60.3)	1.75 (44.5)	2.88 (73.2)	4.00 (101.6)	1.00 (25.4)	0.34 (8.6)	6.21 (157.7)	0.69 (17.5)	0.50 (12.7)	1.00 (25.4)

Angle

Ordering Number	Connection	Orifice in. (mm)	Dimensions, in. (mm)												
			A	B	C	D	D1	E	F	G	G1	H	M	N	Thickness
15NSS-DFF2-2	DFF2	0.094 (2.39)	1.81 (46.1)	0.91 (23.1)	0.44 (11.2)	0.81 (20.6)		1.72 (43.6)	1.75 (44.5)	0.62 (15.8)	0.17 (4.3)	3.47 (88.2)	0.56 (14.2)	0.31 (7.9)	0.62 (15.8)
15NSS-DFF4-2	DFF4	0.188 (4.77)	2.33 (59.2)	1.17 (29.6)	0.52 (13.3)	1.19 (30.2)		2.60 (66.0)	3.00 (76.2)	0.75 (19.1)	0.22 (5.6)	5.50 (139.7)	0.62 (15.8)	0.38 (9.7)	0.75 (19.1)
15NSS-DFF6-2	DFF6	0.250 (6.35)	2.27 (57.6)	1.13 (28.8)	0.54 (13.6)	1.19 (30.2)		2.56 (65.0)	3.00 (76.2)	0.75 (19.1)	0.22 (5.6)	5.53 (140.5)	0.62 (15.8)	0.38 (9.7)	0.75 (19.1)
15NSS-DFF8-2	DFF8	0.375 (9.53)	2.86 (72.7)	1.43 (36.4)	0.60 (15.3)	1.75 (44.5)		3.56 (90.5)	4.00 (101.6)	1.00 (25.4)	0.34 (8.6)	6.89 (175.0)	0.69 (17.5)	0.50 (12.7)	1.00 (25.4)

Angle (replaceable seat)

Ordering Number	Connection	Orifice in. (mm)	Dimensions, in. (mm)												
			A	B	C	D	D1	E	F	G	G1	H	M	N	Thickness
15NSS-DFF2-3	DFF2	0.094 (2.39)	1.81 (46.1)	0.91 (23.1)	0.44 (11.2)	0.81 (20.6)	1.44 (36.5)	1.56 (39.7)	1.75 (44.5)	0.62 (15.8)	0.17 (4.3)	4.00 (101.6)	0.56 (14.2)	0.31 (7.9)	0.62 (15.8)
15NSS-DFF4-3	DFF4	0.188 (4.77)	2.33 (59.2)	1.17 (29.6)	0.52 (13.3)	1.19 (30.2)	2.05 (52.0)	2.25 (57.2)	3.00 (76.2)	0.75 (19.1)	0.22 (5.6)	6.13 (155.8)	0.62 (15.8)	0.38 (9.7)	0.75 (19.1)
15NSS-DFF6-3	DFF6	0.250 (6.35)	2.27 (57.6)	1.13 (28.8)	0.54 (13.6)	1.19 (30.2)	2.32 (59.0)	2.25 (57.2)	3.00 (76.2)	0.75 (19.1)	0.22 (5.6)	6.48 (164.7)	0.62 (15.8)	0.38 (9.7)	0.75 (19.1)
15NSS-DFF8-3	DFF8	0.375 (9.53)	2.86 (72.7)	1.43 (36.4)	0.60 (15.3)	1.75 (44.5)	2.68 (68.1)	3.25 (82.6)	4.00 (101.6)	1.00 (25.4)	0.34 (8.6)	7.72 (196.1)	0.69 (17.5)	0.50 (12.7)	1.00 (25.4)

Ordering Information and Dimensions (Tubing Connection, 3-Way)

2 on pressure

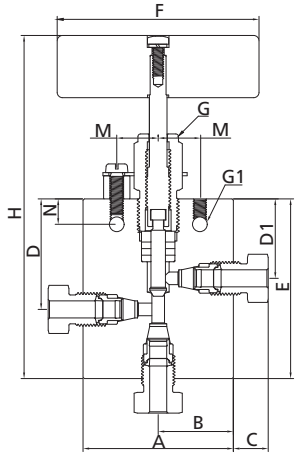

1 on pressure

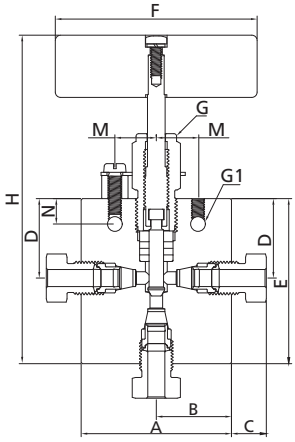

2 stem manifold

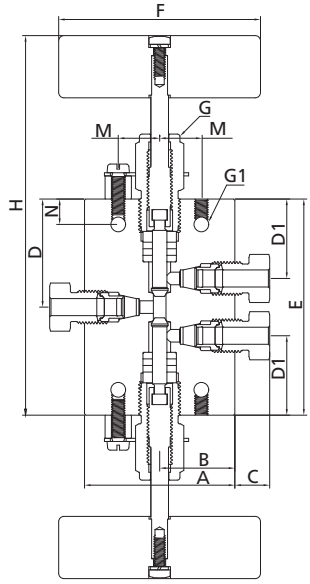

2 on pressure

Ordering Number	Connection	Orifice in. (mm)	Dimensions, in. (mm)												
			A	B	C	D	D1	E	F	G	G1	H	M	N	Thickness
15NSS-DFF2-4	DFF2	0.094 (2.39)	1.81 (46.1)	0.91 (23.1)	0.44 (11.2)	1.06 (27.0)	0.81 (20.6)	1.85 (46.9)	1.75 (44.5)	0.62 (15.8)	0.17 (4.3)	3.60 (91.5)	0.56 (14.2)	0.31 (7.9)	0.62 (15.8)
15NSS-DFF4-4	DFF4	0.188 (4.77)	2.33 (59.2)	1.17 (29.6)	0.52 (13.3)	1.62 (41.2)	1.19 (30.2)	2.79 (70.8)	3.00 (76.2)	0.75 (19.1)	0.22 (5.6)	5.56 (144.5)	0.62 (15.8)	0.38 (9.7)	0.75 (19.1)
15NSS-DFF6-4	DFF6	0.250 (6.35)	2.27 (57.6)	1.13 (28.8)	0.54 (13.6)	1.62 (41.2)	1.19 (30.2)	2.76 (70.0)	3.00 (76.2)	0.75 (19.1)	0.22 (5.6)	5.73 (145.5)	0.62 (15.8)	0.38 (9.7)	0.75 (19.1)
15NSS-DFF8-4	DFF8	0.375 (9.53)	2.86 (72.7)	1.43 (36.4)	0.60 (15.3)	2.37 (60.3)	1.75 (44.5)	3.80 (96.6)	4.00 (101.6)	1.00 (25.4)	0.34 (8.6)	7.14 (181.3)	0.69 (17.5)	0.50 (12.7)	1.00 (25.4)

1 on pressure

Ordering Number	Connection	Orifice in. (mm)	Dimensions, in. (mm)												
			A	B	C	D	D1	E	F	G	G1	H	M	N	Thickness
15NSS-DFF2-5	DFF2	0.094 (2.39)	1.81 (46.1)	0.91 (23.1)	0.44 (11.2)	0.81 (20.6)		1.72 (43.6)	1.75 (44.5)	0.62 (15.8)	0.17 (4.3)	3.47 (88.2)	0.56 (14.2)	0.31 (7.9)	0.62 (15.8)
15NSS-DFF4-5	DFF4	0.188 (4.77)	2.33 (59.2)	1.17 (29.6)	0.52 (13.3)	1.19 (30.2)		2.60 (66.0)	3.00 (76.2)	0.75 (19.1)	0.22 (5.6)	5.50 (139.7)	0.62 (15.8)	0.38 (9.7)	0.75 (19.1)
15NSS-DFF6-5	DFF6	0.250 (6.35)	2.27 (57.6)	1.13 (28.8)	0.54 (13.6)	1.19 (30.2)		2.56 (65.0)	3.00 (76.2)	0.75 (19.1)	0.22 (5.6)	5.53 (140.5)	0.62 (15.8)	0.38 (9.7)	0.75 (19.1)
15NSS-DFF8-5	DFF8	0.375 (9.53)	2.86 (72.7)	1.43 (36.4)	0.60 (15.3)	1.75 (44.5)		3.56 (90.5)	4.00 (101.6)	1.00 (25.4)	0.34 (8.6)	6.89 (175.0)	0.69 (17.5)	0.50 (12.7)	1.00 (25.4)

2 stem manifold

Ordering Number	Connection	Orifice in. (mm)	Dimensions, in. (mm)												
			A	B	C	D	D1	E	F	G	G1	H	M	N	Thickness
15NSS-DFF2-6	DFF2	0.094 (2.39)	1.81 (46.1)	0.91 (23.1)	0.44 (11.2)	1.13 (28.6)	0.81 (20.6)	2.25 (57.2)	1.75 (44.5)	0.62 (15.8)	0.17 (4.3)	4.00 (101.8)	0.56 (14.2)	0.31 (7.9)	0.62 (15.8)
15NSS-DFF4-6	DFF4	0.188 (4.77)	2.33 (59.2)	1.17 (29.6)	0.52 (13.3)	1.69 (42.9)	1.19 (30.2)	3.38 (85.8)	3.00 (76.2)	0.75 (19.1)	0.22 (5.6)	6.28 (159.6)	0.62 (15.8)	0.38 (9.7)	0.75 (19.1)
15NSS-DFF6-6	DFF6	0.250 (6.35)	2.27 (57.6)	1.13 (28.8)	0.54 (13.6)	1.69 (42.9)	1.19 (30.2)	3.38 (85.8)	3.00 (76.2)	0.75 (19.1)	0.22 (5.6)	6.35 (161.3)	0.62 (15.8)	0.38 (9.7)	0.75 (19.1)
15NSS-DFF8-6	DFF8	0.375 (9.53)	2.86 (72.7)	1.43 (36.4)	0.60 (15.3)	2.56 (65.1)	1.75 (44.5)	5.13 (130.2)	4.00 (101.6)	1.00 (25.4)	0.34 (8.6)	8.45 (214.7)	0.69 (17.5)	0.50 (12.7)	1.00 (25.4)

Ordering Information and Dimensions (Pipe Connection, 2-Way)

Straight

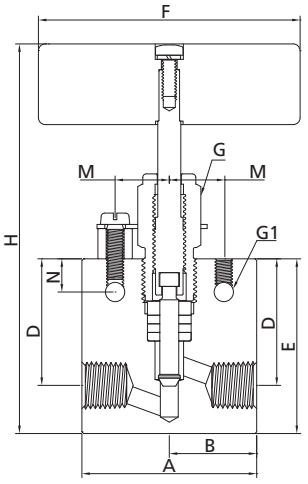

Angle

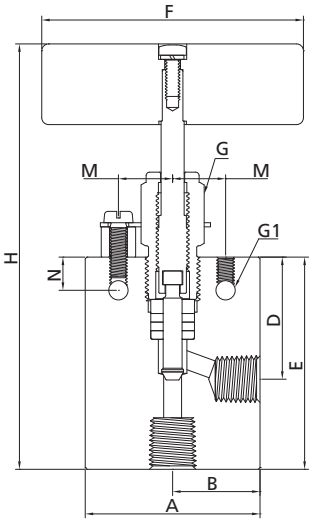

Straight

Ordering Number	Connection	Orifice in. (mm)	Dimensions, in. (mm)												
			A	B	C	D	D1	E	F	G	G1	H	M	N	Thickness
15NSS-FNS2-1	FNS2	0.078 (1.98)	1.50 (38.1)	0.75 (19.1)		0.82 (20.6)		1.25 (31.8)	1.75 (44.5)	0.62 (15.8)	0.17 (4.3)	3.00 (76.4)	0.56 (14.2)	0.31 (7.9)	0.63 (15.9)
15NSS-FRT2-1	FRT2														
15NSS-FNS4-1	FNS4	0.203 (5.2)	2.00 (50.8)	1.00 (25.4)		1.41 (35.8)		2.00 (50.8)	3.00 (76.2)	0.75 (19.1)	0.22 (5.6)	4.89 (124.1)	0.62 (15.8)	0.38 (9.7)	0.75 (19.1)
15NSS-FRT4-1	FRT4														
15NSS-FNS6-1	FNS6	0.219 (5.56)	2.50 (63.5)	1.25 (31.8)		1.41 (35.8)		2.00 (50.8)	3.00 (76.2)	0.75 (19.1)	0.22 (5.6)	4.82 (122.5)	0.62 (15.8)	0.38 (9.7)	1.00 (25.4)
15NSS-FRT6-1	FRT6														
15NSS-FNS8-1	FNS8	0.312 (7.92)	3.00 (76.2)	1.50 (38.1)		2.06 (52.3)		2.88 (73.2)	4.00 (101.6)	1.00 (25.4)	0.34 (8.6)	6.18 (157.2)	0.69 (17.5)	0.50 (12.7)	1.38 (35.1)
15NSS-FRT8-1	FRT8														

Angle

Ordering Number	Connection	Orifice in. (mm)	Dimensions, in. (mm)												
			A	B	C	D	D1	E	F	G	G1	H	M	N	Thickness
15NSS-FNS2-2	FNS2	0.078 (1.98)	1.50 (38.1)	0.75 (19.1)		0.81 (20.6)		1.38 (34.9)	1.75 (44.5)	0.62 (15.8)	0.17 (4.3)	3.13 (79.5)	0.56 (14.2)	0.31 (7.9)	0.63 (15.9)
15NSS-FRT2-2	FRT2														
15NSS-FNS4-2	FNS4	0.203 (5.2)	2.00 (50.8)	1.00 (25.4)		1.41 (35.8)		2.44 (62.0)	3.00 (76.2)	0.75 (19.1)	0.22 (5.6)	5.33 (135.4)	0.62 (15.8)	0.38 (9.7)	0.75 (19.1)
15NSS-FRT4-2	FRT4														
15NSS-FNS6-2	FNS6	0.219 (5.56)	2.50 (63.5)	1.25 (31.8)		1.41 (35.8)		2.44 (62.0)	3.00 (76.2)	0.75 (19.1)	0.22 (5.6)	5.34 (135.7)	0.62 (15.8)	0.38 (9.7)	1.00 (25.4)
15NSS-FRT6-2	FRT6														
15NSS-FNS8-2	FNS8	0.312 (7.92)	3.00 (76.2)	1.50 (38.1)		2.06 (52.3)		3.38 (85.9)	4.00 (101.6)	1.00 (25.4)	0.34 (8.6)	6.69 (169.9)	0.69 (17.5)	0.50 (12.7)	1.38 (35.1)
15NSS-FRT8-2	FRT8														

Ordering Information and Dimensions (Pipe Connection, 3-Way)

2 on pressure

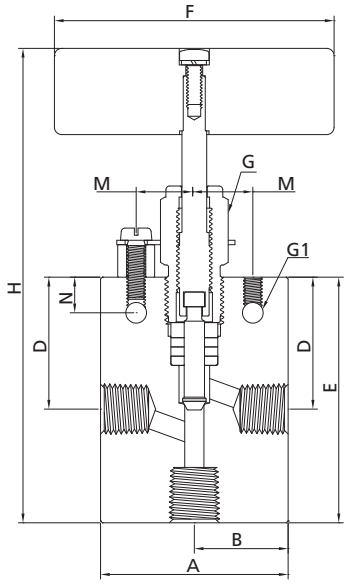

1 on pressure

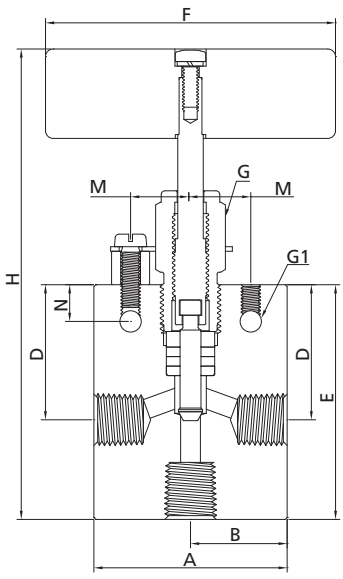

2 stem manifold

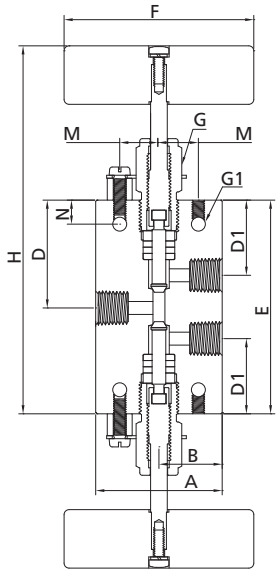

2 on pressure

Ordering Number	Connection	Orifice in. (mm)	Dimensions, in. (mm)												
			A	B	C	D	D1	E	F	G	G1	H	M	N	Thickness
15NSS-FNS2-4	FNS2	0.078 (1.98)	1.50 (38.1)	0.75 (19.1)		0.82 (20.6)		1.57 (40.0)	1.75 (44.5)	0.62 (15.8)	0.17 (4.3)	3.33 (84.6)	0.56 (14.2)	0.31 (7.9)	0.63 (15.9)
15NSS-FRT2-4	FRT2														
15NSS-FNS4-4	FNS4	0.203 (5.2)	2.00 (50.8)	1.00 (25.4)		1.41 (35.8)		2.62 (66.6)	3.00 (76.2)	0.75 (19.1)	0.22 (5.6)	5.51 (140.0)	0.62 (15.8)	0.38 (9.7)	0.75 (19.1)
15NSS-FRT4-4	FRT4														
15NSS-FNS6-4	FNS6	0.219 (5.56)	2.50 (63.5)	1.25 (31.8)		1.41 (35.8)		2.62 (66.6)	3.00 (76.2)	0.75 (19.1)	0.22 (5.6)	5.47 (138.9)	0.62 (15.8)	0.38 (9.7)	1.00 (25.4)
15NSS-FRT6-4	FRT6														
15NSS-FNS8-4	FNS8	0.312 (7.92)	3.00 (76.2)	1.50 (38.1)		2.06 (52.3)		3.62 (92.0)	4.00 (101.6)	1.00 (25.4)	0.34 (8.6)	6.94 (176.26)	0.69 (17.5)	0.50 (12.7)	1.38 (35.1)
15NSS-FRT8-4	FRT8														

1 on pressure

Ordering Number	Connection	Orifice in. (mm)	Dimensions, in. (mm)												
			A	B	C	D	D1	E	F	G	G1	H	M	N	Thickness
15NSS-FNS2-5	FNS2	0.078 (1.98)	1.50 (38.1)	0.75 (19.1)		0.82 (20.6)		1.38 (35.0)	1.75 (44.5)	0.62 (15.8)	0.17 (4.3)	3.13 (79.5)	0.56 (14.2)	0.31 (7.9)	0.63 (15.9)
15NSS-FRT2-5	FRT2														
15NSS-FNS4-5	FNS4	0.203 (5.2)	2.00 (50.8)	1.00 (25.4)		1.41 (35.8)		2.44 (62.0)	3.00 (76.2)	0.75 (19.1)	0.22 (5.6)	5.33 (135.4)	0.62 (15.8)	0.38 (9.7)	0.75 (19.1)
15NSS-FRT4-5	FRT4														
15NSS-FNS6-5	FNS6	0.219 (5.56)	2.50 (63.5)	1.25 (31.8)		1.41 (35.8)		2.44 (62.0)	3.00 (76.2)	0.75 (19.1)	0.22 (5.6)	5.34 (135.7)	0.62 (15.8)	0.38 (9.7)	1.00 (25.4)
15NSS-FRT6-5	FRT6														
15NSS-FNS8-5	FNS8	0.312 (7.92)	3.00 (76.2)	1.50 (38.1)		2.06 (52.3)		3.38 (85.9)	4.00 (101.6)	1.00 (25.4)	0.34 (8.6)	6.69 (169.9)	0.69 (17.5)	0.50 (12.7)	1.38 (35.1)
15NSS-FRT8-5	FRT8														

2 stem manifold

Ordering Number	Connection	Orifice in. (mm)	Dimensions, in. (mm)												
			A	B	C	D	D1	E	F	G	G1	H	M	N	Thickness
15NSS-FNS2-6	FNS2	0.078 (1.98)	1.50 (38.1)	0.75 (19.1)		1.00 (25.6)	0.68 (17.2)	2.02 (51.2)	1.75 (44.5)	0.62 (15.8)	0.17 (4.3)	3.77 (95.8)	0.56 (14.2)	0.31 (7.9)	0.63 (15.9)
15NSS-FRT2-6	FRT2														
15NSS-FNS4-6	FNS4	0.203 (5.2)	2.00 (50.8)	1.00 (25.4)		1.69 (42.9)	1.19 (30.2)	3.38 (85.9)	3.00 (76.2)	0.75 (19.1)	0.22 (5.6)	6.27 (159.2)	0.62 (15.8)	0.38 (9.7)	0.75 (19.1)
15NSS-FRT4-6	FRT4														
15NSS-FNS6-6	FNS6	0.219 (5.56)	2.50 (63.5)	1.25 (31.8)		1.69 (42.9)	1.19 (30.2)	3.38 (85.9)	3.00 (76.2)	0.75 (19.1)	0.22 (5.6)	6.22 (158.1)	0.62 (15.8)	0.38 (9.7)	1.00 (25.4)
15NSS-FRT6-6	FRT6														
15NSS-FNS8-6	FNS8	0.312 (7.92)	3.00 (76.2)	1.50 (38.1)		2.56 (65.1)	1.75 (44.5)	5.12 (130.1)	4.00 (101.6)	1.00 (25.4)	0.34 (8.6)	8.43 (214.2)	0.69 (17.5)	0.50 (12.7)	1.38 (35.1)
15NSS-FRT8-6	FRT8														

Notes: 1. G is the drill dimension of packing gland mounting hole.
2. G1 is the dimension of bracket mounting hole.
3. Panel mounting drill size: 0.25" all valves.
4. H is the dimension of stem in closed position.
5. All dimensions are for reference only and subject to change. For dimensions not shown above, please contact FITOK Group or our authorized distributors.

20N Series: 20,000 psig (1379 bar)

Features

- High tensile 316 stainless steel for valve body and S17400 stainless steel for lower stem
- Metal-to-metal seating achieves ideal shutoff, longer stem/seat service lifetime for abrasive flow, excellent corrosion resistance and greater durability for repeated on/off cycles
- Non-rotating stem and bar stock body design
- Easy to assemble and replace packing
- Reliable locking for packing gland
- Options for Vee or Regulating stem tips
- Five flow patterns available

Technical Data

Tube O.D. in.	Connection	Orifice in. (mm)	Cv	Working Pressure psig (bar)	Working Temperature Range
1/4	MF4	0.125 (3.18)	0.31	20,000 (1379)	-100°F~1200°F (-73°C~649°C)
3/8	MF6	0.204 (5.18)	0.68	20,000 (1379)	
9/16	MF9	0.312 (7.92)	1.30	20,000 (1379)	
3/4	MF12	0.438 (11.13)	2.50	20,000 (1379)	
1	MF16	0.562 (14.27)	4.40	20,000 (1379)	

Notes: 1. Cv values shown are for 2-way straight valve pattern. For 2-way angle pattern, increase Cv value by 50% (based on water).

2. Packing Options
   PTFE is the standard packing material, RPTFE glass, graphite and extended stuffing box with graphite also available.
   Graphite packing not recommended for hydrogen or helium service.
   PTFE: -100°F~450°F (-73°C~232°C)
   RPTFE glass: -100°F~600°F (-73°C~316°C)
   Graphite: 0°F~800°F (-17.8°C~427°C)
   Extended stuffing box with graphite: -100°F~1200°F (-73°C~649°C)

Wetted component listed in italics.

Flow Data at 100°F (38°C)

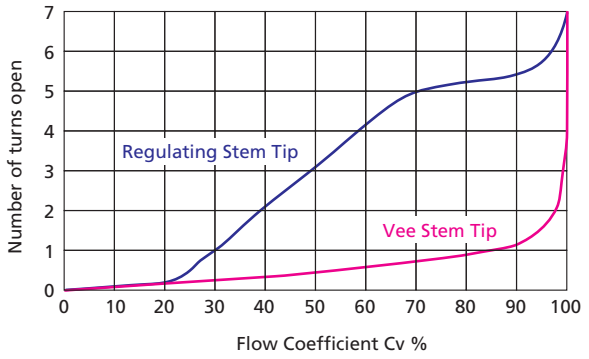

Pressure vs. Temperature Curve

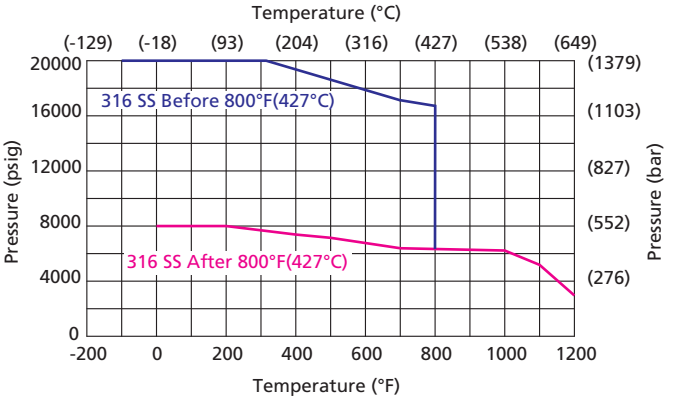

Note: When temperature exceeds 800°F (427°C), use the pink curve as its cold-worked rating for future operating of the components.

Standard Materials of Construction

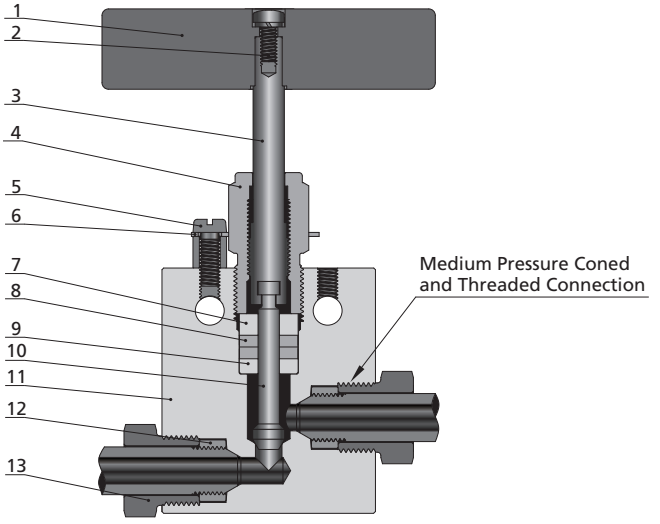

Item	Component	Material Grade
1	Handle	Stainless Steel
2	Handle Screw	Stainless Steel
3	Upper Stem	316 SS
4	Packing Gland	C63000
5	Locking Screw	Stainless Steel
6	Locking Plate	304 SS
7	Packing Ring	C63000
8	*Packing*	*PTFE/RPTFE Glass/Graphite/Extended Stuffing Box with Graphite*
9	*Packing Washer*	*S17400*
10	*Lower Stem*	*S17400*
11	*Body*	*316 SS*
12	Collar	316 SS (For Tubing Connections)
13	Gland	316 SS (For Tubing Connections)
	Lubricant	Molybdenum Disulfide

Ordering Information and Dimensions (Tubing Connection, 2-Way)

Straight

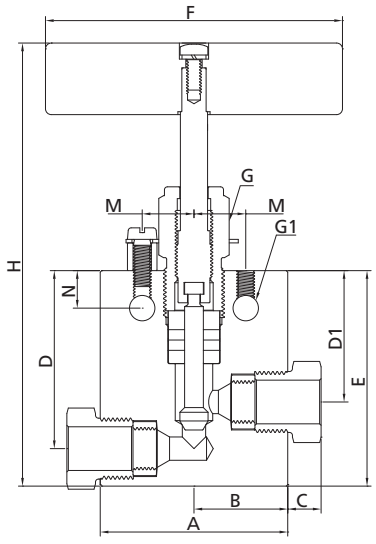

Angle

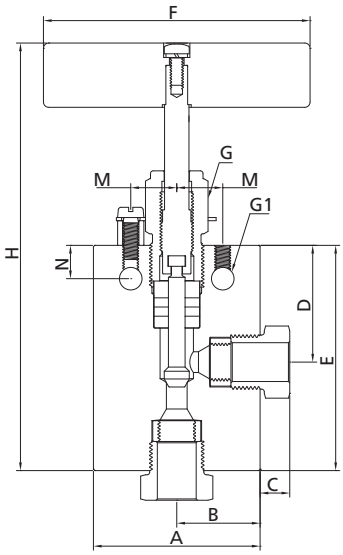

Angle (replaceable seat)

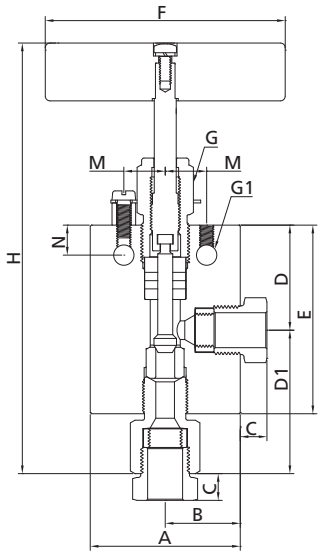

Straight

Ordering Number	Connection	Orifice in. (mm)	Dimensions, in. (mm)												
			A	B	C	D	D1	E	F	G	G1	H	M	N	Thickness
20NSS-MF4-1	MF4	0.125 (3.18)	2.00 (50.8)	1.00 (25.4)	0.38 (9.7)	1.62 (41.2)	1.19 (30.2)	2.00 (50.8)	3.00 (76.2)	0.75 (19.1)	0.22 (5.6)	4.85 (123.1)	0.62 (15.8)	0.38 (9.7)	0.75 (19.1)
20NSS-MF6-1	MF6	0.204 (5.18)	2.00 (50.8)	1.00 (25.4)	0.44 (11.2)	1.62 (41.2)	1.19 (30.2)	2.00 (50.8)	3.00 (76.2)	0.75 (19.1)	0.22 (5.6)	4.89 (124.2)	0.62 (15.8)	0.38 (9.7)	0.75 (19.1)
20NSS-MF9-1	MF9	0.312 (7.92)	2.50 (63.5)	1.25 (31.8)	0.55 (14.0)	2.37 (60.3)	1.75 (44.5)	2.88 (73.2)	4.00 (101.6)	1.00 (25.4)	0.34 (8.6)	6.18 (157.2)	0.69 (17.5)	0.50 (12.7)	1.00 (25.4)
20NSS-MF12-1	MF12	0.438 (11.13)	3.00 (76.2)	1.50 (38.1)	0.60 (15.2)	3.00 (76.2)	2.25 (57.2)	3.75 (95.3)	10.25 (260.4)	1.19 (30.2)	0.44 (11.2)	7.37 (187.2)	0.88 (22.4)	0.63 (16.0)	1.38 (35.1)
20NSS-MF16-1	MF16	0.562 (14.27)	4.12 (104.6)	2.06 (52.3)	0.74 (18.7)	3.75 (95.3)	2.81 (71.4)	4.63 (117.6)	10.25 (260.4)	1.62 (41.2)	0.56 (14.2)	9.45 (240.1)	1.25 (31.8)	1.13 (28.7)	1.75 (44.5)

Angle

Ordering Number	Connection	Orifice in. (mm)	Dimensions, in. (mm)												
			A	B	C	D	D1	E	F	G	G1	H	M	N	Thickness
20NSS-MF4-2	MF4	0.125 (3.18)	2.00 (50.8)	1.00 (25.4)	0.38 (9.7)	1.19 (30.2)		2.44 (61.9)	3.00 (76.2)	0.75 (19.1)	0.22 (5.6)	5.28 (134.2)	0.62 (15.8)	0.38 (9.7)	0.75 (19.1)
20NSS-MF6-2	MF6	0.204 (5.18)	2.00 (50.8)	1.00 (25.4)	0.44 (11.2)	1.19 (30.2)		2.44 (61.9)	3.00 (76.2)	0.75 (19.1)	0.22 (5.6)	5.33 (135.4)	0.62 (15.8)	0.38 (9.7)	0.75 (19.1)
20NSS-MF9-2	MF9	0.312 (7.92)	2.50 (63.5)	1.25 (31.8)	0.55 (14.0)	1.75 (44.5)		3.38 (85.9)	4.00 (101.6)	1.00 (25.4)	0.34 (8.6)	6.69 (170.0)	0.69 (17.5)	0.50 (12.7)	1.00 (25.4)
20NSS-MF12-2	MF12	0.438 (11.13)	3.00 (76.2)	1.50 (38.1)	0.60 (15.2)	2.25 (57.2)		4.25 (108.0)	10.25 (260.4)	1.19 (30.2)	0.44 (11.2)	7.87 (199.9)	0.88 (22.4)	0.63 (16.0)	1.38 (35.1)
20NSS-MF16-2	MF16	0.562 (14.27)	4.12 (104.6)	2.06 (52.3)	0.74 (18.7)	2.81 (71.4)		5.12 (130.1)	10.25 (260.4)	1.62 (41.2)	0.56 (14.2)	9.94 (252.6)	1.25 (31.8)	1.13 (28.7)	1.75 (44.5)

Angle (replaceable seat)

Ordering Number	Connection	Orifice in. (mm)	Dimensions, in. (mm)												
			A	B	C	D	D1	E	F	G	G1	H	M	N	Thickness
20NSS-MF4-3	MF4	0.125 (3.18)	2.00 (50.8)	1.00 (25.4)	0.38 (9.7)	1.19 (30.2)	2.13 (54.0)	2.25 (57.2)	3.00 (76.2)	0.75 (19.1)	0.22 (5.6)	6.10 (154.9)	0.62 (15.8)	0.38 (9.7)	0.75 (19.1)
20NSS-MF6-3	MF6	0.204 (5.18)	2.00 (50.8)	1.00 (25.4)	0.44 (11.2)	1.19 (30.2)	2.13 (54.0)	2.25 (57.2)	3.00 (76.2)	0.75 (19.1)	0.22 (5.6)	6.16 (156.5)	0.62 (15.8)	0.38 (9.7)	0.75 (19.1)
20NSS-MF9-3	MF9	0.312 (7.92)	2.50 (63.5)	1.25 (31.8)	0.55 (14.0)	1.75 (44.5)	2.50 (63.5)	3.13 (79.4)	4.00 (101.6)	1.00 (25.4)	0.34 (8.6)	7.58 (192.1)	0.69 (17.5)	0.50 (12.7)	1.00 (25.4)
20NSS-MF12-3	MF12	0.438 (11.13)	3.00 (76.2)	1.50 (38.1)	0.60 (15.2)	2.25 (57.2)	3.44 (87.4)	4.25 (108.0)	10.25 (260.4)	1.19 (30.2)	0.44 (11.2)	9.30 (236.3)	0.88 (22.4)	0.63 (16.0)	1.38 (35.1)
20NSS-MF16-3	MF16	0.562 (14.27)	4.12 (104.6)	2.06 (52.3)	0.74 (18.7)	2.81 (71.4)	4.22 (107.4)	5.25 (133.4)	10.25 (260.4)	1.62 (41.2)	0.56 (14.2)	11.86 (301.3)	1.25 (31.8)	1.13 (28.7)	1.75 (44.5)

Ordering Information and Dimensions (Tubing Connection, 3-Way)

2 on pressure

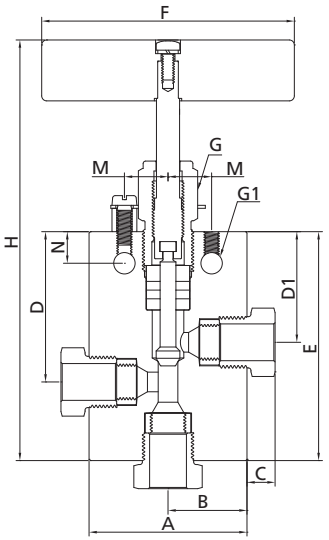

1 on pressure

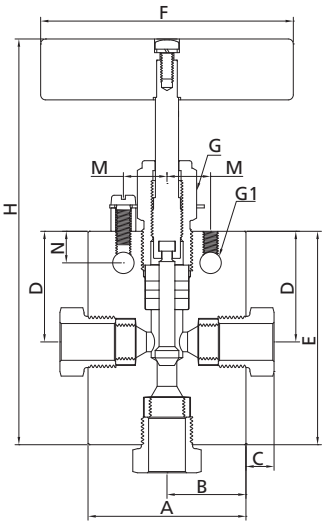

2 stem manifold

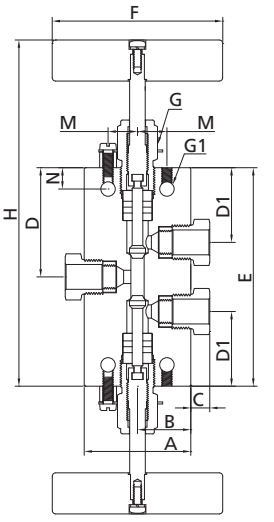

2 on pressure

Ordering Number	Connection	Orifice in. (mm)	Dimensions, in. (mm)												
			A	B	C	D	D1	E	F	G	G1	H	M	N	Thickness
20NSS-MF4-4	MF4	0.125 (3.18)	2.00 (50.8)	1.00 (25.4)	0.38 (9.7)	1.63 (41.3)	1.19 (30.2)	2.63 (66.7)	3.00 (76.2)	0.75 (19.1)	0.22 (5.6)	5.47 (139.0)	0.62 (15.8)	0.38 (9.7)	0.75 (19.1)
20NSS-MF6-4	MF6	0.204 (5.18)	2.00 (50.8)	1.00 (25.4)	0.44 (11.2)	1.63 (41.3)	1.19 (30.2)	2.63 (66.7)	3.00 (76.2)	0.75 (19.1)	0.22 (5.6)	5.52 (140.1)	0.62 (15.8)	0.38 (9.7)	0.75 (19.1)
20NSS-MF9-4	MF9	0.312 (7.92)	2.50 (63.5)	1.25 (31.8)	0.55 (14.0)	2.37 (60.3)	1.75 (44.5)	3.63 (92.1)	4.00 (101.6)	1.00 (25.4)	0.34 (8.6)	6.94 (176.3)	0.69 (17.5)	0.50 (12.7)	1.00 (25.4)
20NSS-MF12-4	MF12	0.438 (11.13)	3.00 (76.2)	1.50 (38.1)	0.60 (15.2)	3.00 (76.2)	2.25 (57.2)	4.63 (117.5)	10.25 (260.4)	1.19 (30.2)	0.44 (11.2)	8.24 (209.4)	0.88 (22.4)	0.63 (16.0)	1.38 (35.1)
20NSS-MF16-4	MF16	0.562 (14.27)	4.12 (104.6)	2.06 (52.3)	0.74 (18.7)	3.75 (95.3)	2.81 (71.4)	5.88 (149.4)	10.25 (260.4)	1.62 (41.2)	0.56 (14.2)	10.70 (271.9)	1.25 (31.8)	1.13 (28.7)	1.75 (44.5)

1 on pressure

Ordering Number	Connection	Orifice in. (mm)	Dimensions, in. (mm)												
			A	B	C	D	D1	E	F	G	G1	H	M	N	Thickness
20NSS-MF4-5	MF4	0.125 (3.18)	2.00 (50.8)	1.00 (25.4)	0.38 (9.7)	1.19 (30.2)		2.44 (61.9)	3.00 (76.2)	0.75 (19.1)	0.22 (5.6)	5.28 (134.2)	0.62 (15.8)	0.38 (9.7)	0.75 (19.1)
20NSS-MF6-5	MF6	0.204 (5.18)	2.00 (50.8)	1.00 (25.4)	0.44 (11.2)	1.19 (30.2)		2.44 (61.9)	3.00 (76.2)	0.75 (19.1)	0.22 (5.6)	5.33 (135.4)	0.62 (15.8)	0.38 (9.7)	0.75 (19.1)
20NSS-MF9-5	MF9	0.312 (7.92)	2.50 (63.5)	1.25 (31.8)	0.55 (14.0)	1.75 (44.5)		3.38 (85.9)	4.00 (101.6)	1.00 (25.4)	0.34 (8.6)	6.69 (170.0)	0.69 (17.5)	0.50 (12.7)	1.00 (25.4)
20NSS-MF12-5	MF12	0.438 (11.13)	3.00 (76.2)	1.50 (38.1)	0.60 (15.2)	2.25 (57.2)		4.25 (108.0)	10.25 (260.4)	1.19 (30.2)	0.44 (11.2)	7.87 (199.9)	0.88 (22.4)	0.63 (16.0)	1.38 (35.1)
20NSS-MF16-5	MF16	0.562 (14.27)	4.12 (104.6)	2.06 (52.3)	0.74 (18.7)	2.81 (71.4)		5.12 (130.1)	10.25 (260.4)	1.62 (41.2)	0.56 (14.2)	9.94 (252.6)	1.25 (31.8)	1.13 (28.7)	1.75 (44.5)

2 stem manifold

Ordering Number	Connection	Orifice in. (mm)	Dimensions, in. (mm)												
			A	B	C	D	D1	E	F	G	G1	H	M	N	Thickness
20NSS-MF4-6	MF4	0.125 (3.18)	2.00 (50.8)	1.00 (25.4)	0.38 (9.7)	1.69 (42.9)	1.19 (30.2)	3.38 (85.7)	3.00 (76.2)	0.75 (19.1)	0.22 (5.6)	6.23 (158.1)	0.62 (15.8)	0.38 (9.7)	0.75 (19.1)
20NSS-MF6-6	MF6	0.204 (5.18)	2.00 (50.8)	1.00 (25.4)	0.44 (11.2)	1.69 (42.9)	1.19 (30.2)	3.38 (85.7)	3.00 (76.2)	0.75 (19.1)	0.22 (5.6)	6.24 (158.6)	0.62 (15.8)	0.38 (9.7)	0.75 (19.1)
20NSS-MF9-6	MF9	0.312 (7.92)	2.50 (63.5)	1.25 (31.8)	0.55 (14.0)	2.56 (65.1)	1.75 (44.5)	5.13 (130.2)	4.00 (101.6)	1.00 (25.4)	0.34 (8.6)	8.44 (214.4)	0.69 (17.5)	0.50 (12.7)	1.00 (25.4)
20NSS-MF12-6	MF12	0.438 (11.13)	3.00 (76.2)	1.50 (38.1)	0.60 (15.2)	3.00 (76.2)	2.25 (57.2)	6.50 (165.1)	10.25 (260.4)	1.19 (30.2)	0.44 (11.2)	10.11 (257.0)	0.88 (22.4)	0.63 (16.0)	1.38 (35.1)
20NSS-MF16-6	MF16	0.562 (14.27)	4.12 (104.6)	2.06 (52.3)	0.74 (18.7)	3.75 (95.3)	2.81 (71.4)	7.50 (190.5)	10.25 (260.4)	1.62 (41.2)	0.56 (14.2)	12.32 (313.0)	1.25 (31.8)	1.13 (28.7)	1.75 (44.5)

Notes: 1. G is the drill dimension of packing gland mounting hole.
2. G1 is the dimension of bracket mounting hole.
3. Panel mounting drill size: 0.25" all valves.
4. H is the dimension of stem in closed position.
5. All dimensions are for reference only and subject to change. For dimensions not shown above, please contact FITOK Group or our authorized distributors.

30N Series: 30,000 psig (2068 bar)

Features

- High tensile 316 stainless steel for valve body and S17400 stainless steel for lower stem
- Metal-to-metal seating achieves ideal shutoff, longer stem/seat service lifetime for abrasive flow, excellent corrosion resistance and greater durability for repeated on/off cycles
- Non-rotating stem and bar stock body design
- Easy to assemble and replace packing
- Reliable packing gland locking device
- Options for Vee or Regulating stem tips
- Five flow patterns available

Technical Data

Tube O.D. in.	Connection	Orifice in. (mm)	Cv	Working Pressure psig (bar)	Working Temperature Range
1/4	HF4	0.094 (2.39)	0.12	30,000 (2068)	-100°F~600°F (-73°C~316°C)
3/8	HF6	0.125 (3.18)	0.23	30,000 (2068)	
9/16	HF9	0.125 (3.18)	0.33	30,000 (2068)	

Notes: 1. Cv values shown are for 2-way straight valve pattern. For 2-way angle pattern, increase Cv value by 50% (based on water).
2. Packing Options
PTFE is the standard packing material, RPTFE glass also available
PTFE: -100°F~450°F (-73°C~232°C)
RPTFE glass: -100°F~600°F(-73°C~316°C)

Flow Data at 100°F (38°C)

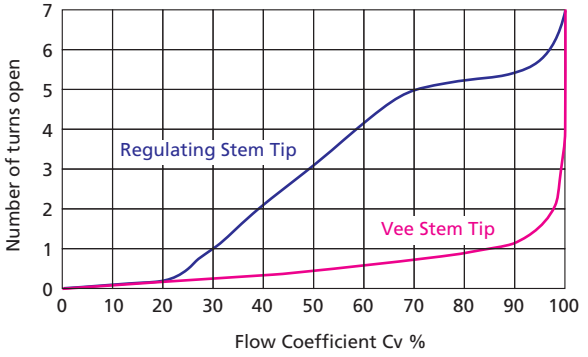

Pressure vs. Temperature Curve

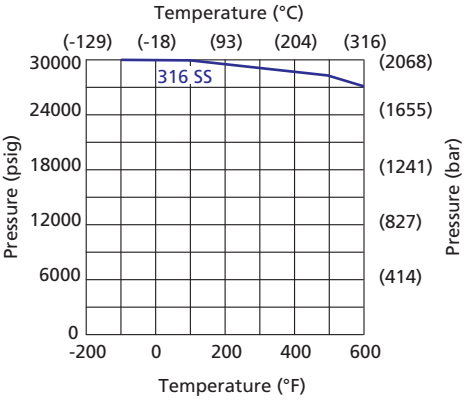

Standard Materials of Construction

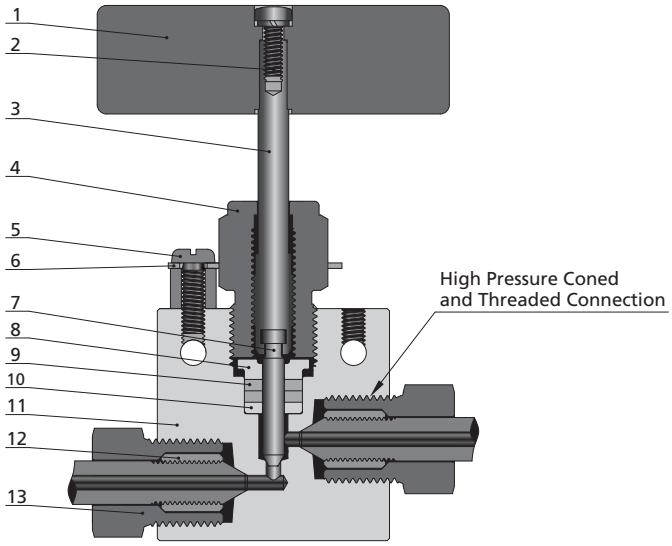

Item	Component	Material Grade
1	Handle	Stainless Steel
2	Handle Screw	Stainless Steel
3	Upper Stem	316 SS
4	Packing Gland	C63000
5	Locking Screw	Stainless Steel
6	Locking Plate	304 SS
7	*Lower Stem*	*S17400*
8	Packing Ring	C63000
9	*Packing*	*PTFE / RPTFE*
10	*Packing Washer*	*S17400*
11	*Body*	*316 SS*
12	Collar	316 SS
13	Gland	316 SS
	Lubricant	Molybdenum Disulfide

Wetted component listed in italics.

Ordering Information and Dimensions (Tubing Connection, 2-Way)

Straight

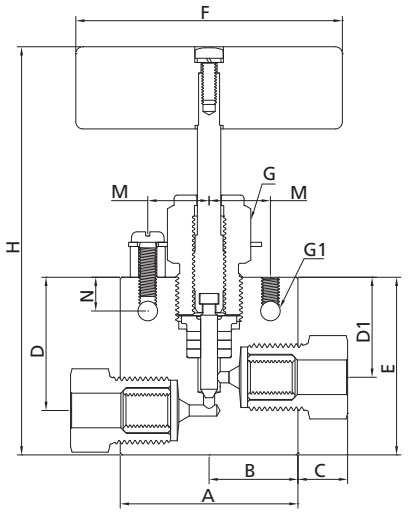

Angle

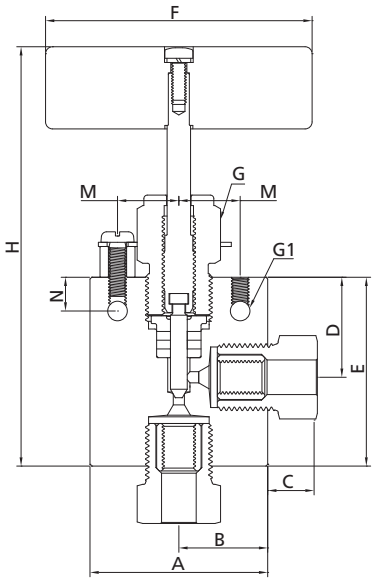

Angle (replaceable seat)

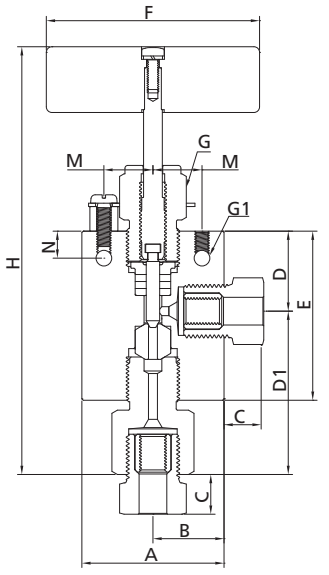

Straight

Ordering Number	Connection	Orifice in. (mm)	Dimensions, in. (mm)												
			A	B	C	D	D1	E	F	G	G1	H	M	N	Thickness
30NSS-HF4-1	HF4	0.094 (2.39)	2.00 (50.8)	1.00 (25.4)	0.47 (11.9)	1.50 (38.1)	1.12 (28.5)	2.00 (50.8)	3.00 (76.2)	1.00 (25.4)	0.22 (5.6)	4.69 (119.1)	0.69 (17.5)	0.38 (9.7)	1.00 (25.4)
30NSS-HF6-1	HF6	0.125 (3.18)	2.00 (50.8)	1.00 (25.4)	0.61 (15.6)	1.50 (38.1)	1.12 (28.5)	2.00 (50.8)	3.00 (76.2)	1.00 (25.4)	0.22 (5.6)	4.69 (119.1)	0.69 (17.5)	0.38 (9.7)	1.00 (25.4)
30NSS-HF9-1	HF9	0.125 (3.18)	2.62 (66.6)	1.31 (33.3)	0.95 (24.1)	1.56 (39.6)	1.12 (28.5)	2.44 (62.0)	3.00 (76.2)	1.00 (25.4)	0.28 (7.1)	5.13 (130.3)	0.69 (17.5)	0.38 (9.7)	1.50 (38.1)

Angle

Ordering Number	Connection	Orifice in. (mm)	Dimensions, in. (mm)												
			A	B	C	D	D1	E	F	G	G1	H	M	N	Thickness
30NSS-HF4-2	HF4	0.094 (2.39)	2.00 (50.8)	1.00 (25.4)	0.47 (11.9)	1.12 (28.5)		2.00 (50.8)	3.00 (76.2)	1.00 (25.4)	0.22 (5.6)	4.69 (119.1)	0.69 (17.5)	0.38 (9.7)	1.00 (25.4)
30NSS-HF6-2	HF6	0.125 (3.18)	2.00 (50.8)	1.00 (25.4)	0.61 (15.6)	1.12 (28.5)		2.25 (57.2)	3.00 (76.2)	1.00 (25.4)	0.22 (5.6)	4.95 (125.7)	0.69 (17.5)	0.38 (9.7)	1.00 (25.4)
30NSS-HF9-2	HF9	0.125 (3.18)	2.62 (66.6)	1.31 (33.3)	0.95 (24.1)	1.12 (28.5)		2.44 (62.0)	3.00 (76.2)	1.00 (25.4)	0.28 (7.1)	5.13 (130.3)	0.69 (17.5)	0.38 (9.7)	1.50 (38.1)

Angle (replaceable seat)

Ordering Number	Connection	Orifice in. (mm)	Dimensions, in. (mm)												
			A	B	C	D	D1	E	F	G	G1	H	M	N	Thickness
30NSS-HF4-3	HF4	0.094 (2.39)	2.00 (50.8)	1.00 (25.4)	0.47 (11.9)	1.12 (28.5)	2.06 (52.3)	2.38 (60.5)	3.00 (76.2)	1.00 (25.4)	0.22 (5.6)	5.88 (149.2)	0.69 (17.5)	0.38 (9.7)	1.00 (25.4)
30NSS-HF6-3	HF6	0.125 (3.18)	2.00 (50.8)	1.00 (25.4)	0.61 (15.6)	1.12 (28.5)	2.31 (58.67)	2.38 (60.5)	3.00 (76.2)	1.00 (25.4)	0.22 (5.6)	6.12 (155.4)	0.69 (17.5)	0.38 (9.7)	1.00 (25.4)
30NSS-HF9-3	HF9	0.125 (3.18)	2.62 (66.6)	1.31 (33.3)	0.95 (24.1)	1.12 (28.6)	2.57 (65.3)	2.46 (62.4)	3.00 (76.2)	1.00 (25.4)	0.28 (7.1)	6.39 (162.4)	0.69 (17.5)	0.38 (9.7)	1.50 (38.1)

Ordering Information and Dimensions (Tubing Connection, 3-Way)

2 on pressure

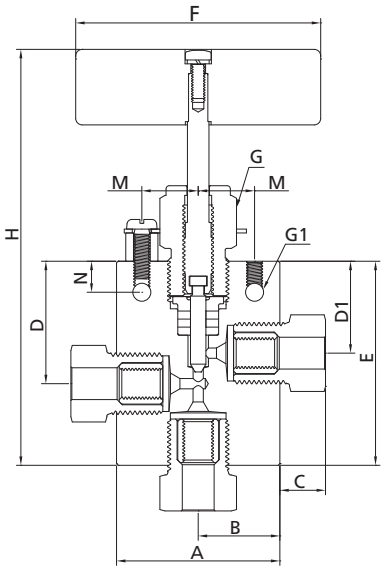

1 on pressure

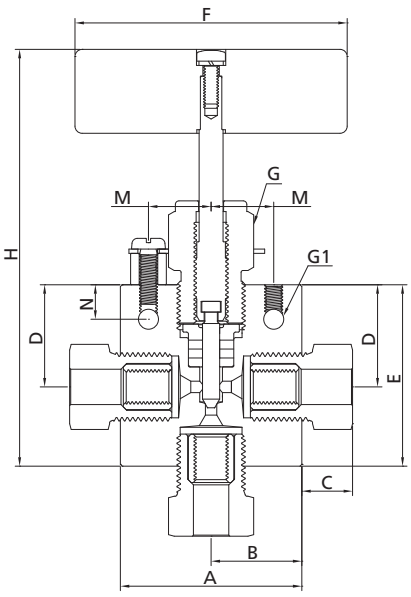

2 stem manifold

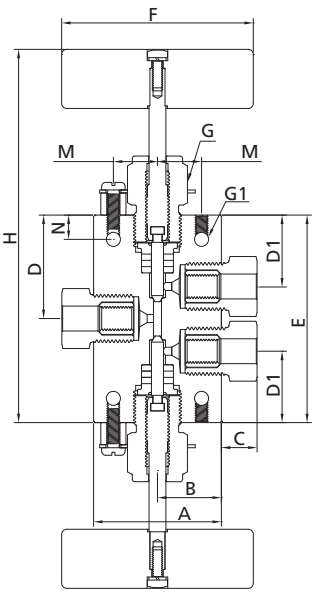

2 on pressure

Ordering Number	Connection	Orifice in. (mm)	Dimensions, in. (mm)												
			A	B	C	D	D1	E	F	G	G1	H	M	N	Thickness
30NSS-HF4-4	HF4	0.094 (2.39)	2.00 (50.8)	1.00 (25.4)	0.47 (11.9)	1.50 (38.1)	1.12 (28.5)	2.12 (53.9)	3.00 (76.2)	1.00 (25.4)	0.22 (5.6)	4.81 (122.1)	0.69 (17.5)	0.38 (9.7)	1.00 (25.4)
30NSS-HF6-4	HF6	0.125 (3.18)	2.00 (50.8)	1.00 (25.4)	0.61 (15.6)	1.50 (38.1)	1.12 (28.5)	2.50 (63.5)	3.00 (76.2)	1.00 (25.4)	0.22 (5.6)	5.19 (131.9)	0.69 (17.5)	0.38 (9.7)	1.00 (25.4)
30NSS-HF9-4	HF9	0.125 (3.18)	2.62 (66.6)	1.31 (33.3)	0.95 (24.1)	1.56 (39.6)	1.12 (28.5)	2.88 (73.2)	3.00 (76.2)	1.00 (25.4)	0.28 (7.1)	5.57 (141.5)	0.69 (17.5)	0.38 (9.7)	1.50 (38.1)

1 on pressure

Ordering Number	Connection	Orifice in. (mm)	Dimensions, in. (mm)												
			A	B	C	D	D1	E	F	G	G1	H	M	N	Thickness
30NSS-HF4-5	HF4	0.094 (2.39)	2.00 (50.8)	1.00 (25.4)	0.47 (11.9)	1.12 (28.5)		2.00 (50.8)	3.00 (76.2)	1.00 (25.4)	0.22 (5.6)	4.69 (119.1)	0.69 (17.5)	0.38 (9.7)	1.00 (25.4)
30NSS-HF6-5	HF6	0.125 (3.18)	2.00 (50.8)	1.00 (25.4)	0.61 (15.6)	1.12 (28.5)		2.25 (57.2)	3.00 (76.2)	1.00 (25.4)	0.22 (5.6)	4.95 (125.7)	0.69 (17.5)	0.38 (9.7)	1.00 (25.4)
30NSS-HF9-5	HF9	0.125 (3.18)	2.62 (66.6)	1.31 (33.3)	0.95 (24.1)	1.12 (28.5)		2.44 (62.0)	3.00 (76.2)	1.00 (25.4)	0.28 (7.1)	5.13 (130.3)	0.69 (17.5)	0.38 (9.7)	1.50 (38.1)

2 stem manifold

Ordering Number	Connection	Orifice in. (mm)	Dimensions, in. (mm)												
			A	B	C	D	D1	E	F	G	G1	H	M	N	Thickness
30NSS-HF4-6	HF4	0.094 (2.39)	2.00 (50.8)	1.00 (25.4)	0.47 (11.9)	1.53 (38.9)	1.12 (28.5)	3.06 (77.7)	3.00 (76.2)	1.00 (25.4)	0.22 (5.6)	5.75 (146.0)	0.69 (17.5)	0.38 (9.7)	1.00 (25.4)
30NSS-HF6-6	HF6	0.125 (3.18)	2.00 (50.8)	1.00 (25.4)	0.61 (15.6)	1.62 (41.2)	1.12 (28.5)	3.25 (82.6)	3.00 (76.2)	1.00 (25.4)	0.22 (5.6)	5.94 (150.9)	0.69 (17.5)	0.38 (9.7)	1.00 (25.4)
30NSS-HF9-6	HF9	0.125 (3.18)	2.62 (66.6)	1.31 (33.3)	0.95 (24.1)	1.88 (47.8)	1.12 (28.5)	3.75 (95.3)	3.00 (76.2)	1.00 (25.4)	0.28 (7.1)	6.44 (163.6)	0.69 (17.5)	0.38 (9.7)	1.50 (38.1)

Notes: 1. G is the drill dimension of packing gland mounting hole.
2. G1 is the dimension of bracket mounting hole.
3. Panel mounting drill size: 0.25" all valves.
4. H is the dimension of stem in closed position.
5. All dimensions are for reference only and subject to change. For dimensions not shown above, please contact FITOK Group or our authorized distributors.

60N Series: 60,000 psig (4137 bar)

Features

- High tensile 316 stainless steel for valve body and S17400 stainless steel for lower stem
- Metal-to-metal seating achieves ideal shutoff, longer stem/seat service lifetime for abrasive flow, excellent corrosion resistance and greater durability for repeated on/off cycles
- Non-rotating stem and bar stock body design
- Easy to assemble and replace packing
- Reliable packing gland locking device
- Options for Vee or Regulating stem tips
- Five flow patterns available

Technical Data

Tube O.D. in.	Connection	Orifice in. (mm)	Cv	Working Pressure psig (bar)	Working Temperature Range
1/4	HF4	0.063 (1.59)	0.08	60,000 (4137)	-100°F~600°F (-73°C~316°C)
3/8	HF6	0.063 (1.59)	0.09	60,000 (4137)	
9/16	HF9	0.078 (1.98)	0.14	60,000 (4137)	

Notes: 1. Cv values shown are for 2-way straight valve pattern. For 2-way angle pattern, increase Cv value by 50% (based on water).
2. Packing Options
Nylon is the standard packing material, RPTFE glass also available
Nylon: 40°F~230°F (4.4°C~110°C)
RPTFE glass: -100°F~600°F (-73°C~316°C)

Flow Data at 100°F (38°C)

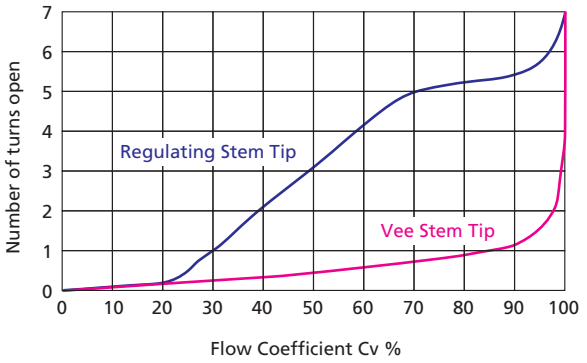

Pressure vs. Temperature Curve

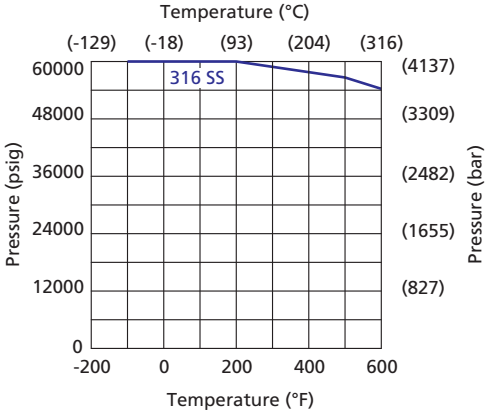

Standard Materials of Construction

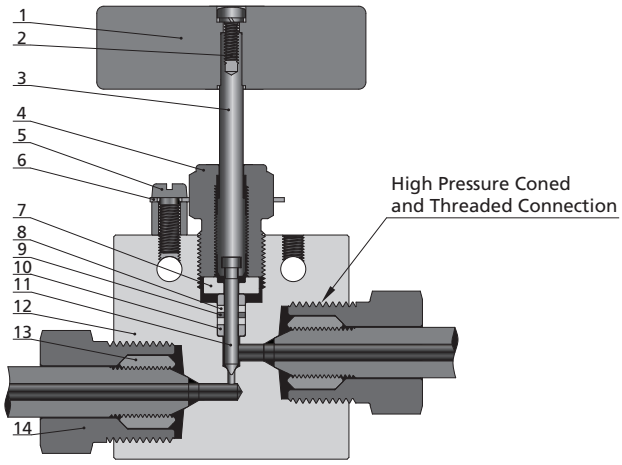

Item	Component	Material Grade
1	Handle	Stainless Steel
2	Handle Screw	Stainless Steel
3	Upper Stem	316 SS
4	Packing Gland	C63000
5	Locking Screw	Stainless Steel
6	Locking Plate	304 SS
7	Packing Ring	*S17400*
8	*Packing*	*Nylon/RPTFE*
9	*Retaining Ring*	*PEEK*
10	*Packing Washer*	*S17400*
11	*Lower Stem*	*S17400*
12	*Body*	*316 SS*
13	Collar	316 SS
14	Gland	316 SS
	Lubricant	Molybdenum Disulfide

Wetted component listed in italics.

Ordering Information and Dimensions (Tubing Connection, 2-Way)

Straight

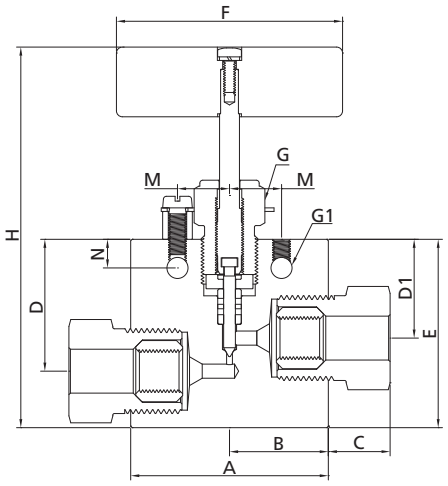

Angle

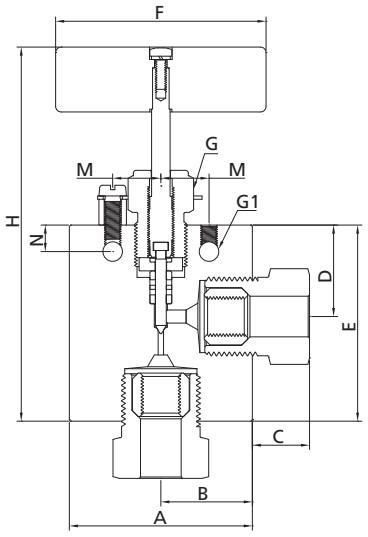

Angle (replaceable seat)

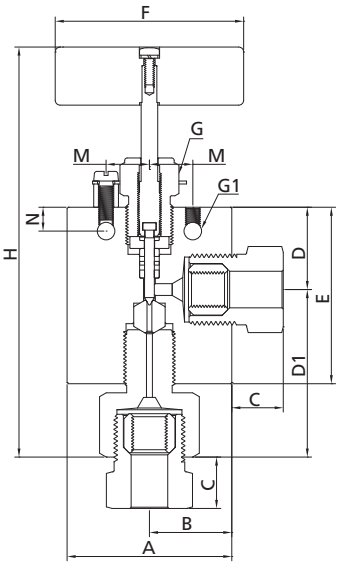

Straight

Ordering Number	Connection	Orifice in. (mm)	Dimensions, in. (mm)												
			A	B	C	D	D1	E	F	G	G1	H	M	N	Thickness
60NSS-HF4-1	HF4	0.063 (1.59)	2.00 (50.8)	1.00 (25.4)	0.47 (11.9)	1.69 (42.9)	1.31 (33.3)	2.13 (54.0)	3.00 (76.2)	1.00 (25.4)	0.22 (5.6)	4.77 (121.1)	0.69 (17.5)	0.38 (9.7)	1.00 (25.4)
60NSS-HF6-1	HF6	0.063 (1.59)	2.00 (50.8)	1.00 (25.4)	0.61 (15.6)	1.69 (42.9)	1.31 (33.3)	2.25 (57.2)	3.00 (76.2)	1.00 (25.4)	0.22 (5.6)	4.89 (124.3)	0.69 (17.5)	0.38 (9.7)	1.00 (25.4)
60NSS-HF9-1	HF9	0.078 (1.98)	2.62 (66.6)	1.31 (33.3)	0.95 (24.1)	1.75 (44.5)	1.31 (33.3)	2.50 (63.5)	3.00 (76.2)	1.00 (25.4)	0.28 (7.1)	5.14 (130.6)	0.69 (17.5)	0.38 (9.7)	1.50 (38.1)

Angle

Ordering Number	Connection	Orifice in. (mm)	Dimensions, in. (mm)												
			A	B	C	D	D1	E	F	G	G1	H	M	N	Thickness
60NSS-HF4-2	HF4	0.063 (1.59)	2.00 (50.8)	1.00 (25.4)	0.47 (11.9)	1.31 (33.3)		2.38 (60.5)	3.00 (76.2)	1.00 (25.4)	0.22 (5.6)	5.02 (127.5)	0.69 (17.5)	0.38 (9.7)	1.00 (25.4)
60NSS-HF6-2	HF6	0.063 (1.59)	2.00 (50.8)	1.00 (25.4)	0.61 (15.6)	1.31 (33.3)		2.62 (66.6)	3.00 (76.2)	1.00 (25.4)	0.22 (5.6)	5.26 (133.5)	0.69 (17.5)	0.38 (9.7)	1.00 (25.4)
60NSS-HF9-2	HF9	0.078 (1.98)	2.62 (66.6)	1.31 (33.3)	0.95 (24.1)	1.31 (33.3)		2.81 (71.4)	3.00 (76.2)	1.00 (25.4)	0.28 (7.1)	5.45 (138.5)	0.69 (17.5)	0.38 (9.7)	1.50 (38.1)

Angle (replaceable seat)

Ordering Number	Connection	Orifice in. (mm)	Dimensions, in. (mm)												
			A	B	C	D	D1	E	F	G	G1	H	M	N	Thickness
60NSS-HF4-3	HF4	0.063 (1.59)	2.00 (50.8)	1.00 (25.4)	0.47 (11.9)	1.31 (33.3)	2.12 (53.9)	2.62 (66.6)	3.00 (76.2)	1.00 (25.4)	0.22 (5.6)	6.07 (154.1)	0.69 (17.5)	0.38 (9.7)	1.00 (25.4)
60NSS-HF6-3	HF6	0.063 (1.59)	2.00 (50.8)	1.00 (25.4)	0.61 (15.6)	1.31 (33.3)	2.36 (59.9)	2.62 (66.6)	3.00 (76.2)	1.00 (25.4)	0.22 (5.6)	6.30 (160.1)	0.69 (17.5)	0.38 (9.7)	1.00 (25.4)
60NSS-HF9-3	HF9	0.078 (1.98)	2.62 (66.6)	1.31 (33.3)	0.95 (24.1)	1.31 (33.3)	2.68 (68.8)	2.62 (66.6)	3.00 (76.2)	1.00 (25.4)	0.28 (7.1)	6.65 (168.9)	0.69 (17.5)	0.38 (9.7)	1.50 (38.1)

Ordering Information and Dimensions (Tubing Connection, 3-Way)

2 on pressure

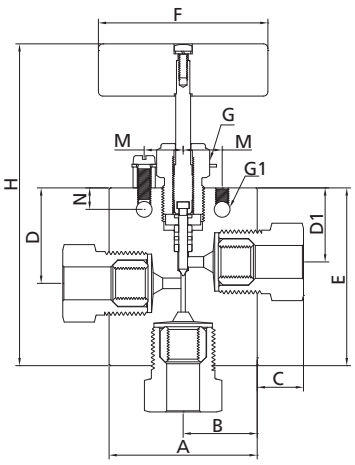

1 on pressure

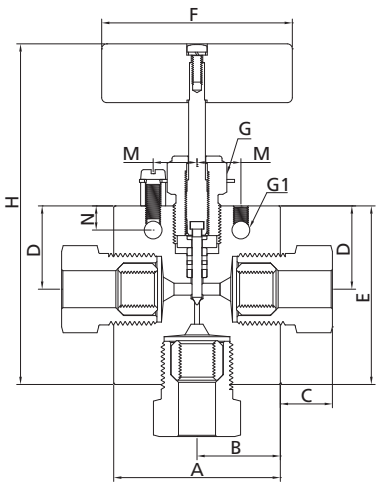

2 stem manifold

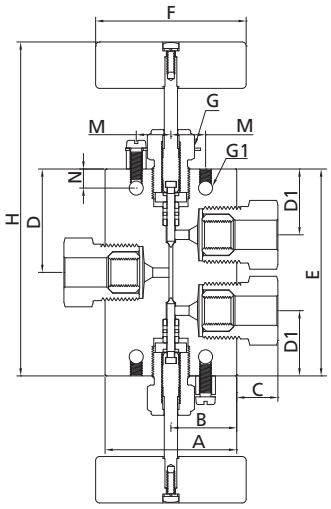

2 on pressure

Ordering Number	Connection	Orifice in. (mm)	Dimensions, in. (mm)												
			A	B	C	D	D1	E	F	G	G1	H	M	N	Thickness
60NSS-HF4-4	HF4	0.063 (1.59)	2.00 (50.8)	1.00 (25.4)	0.47 (11.9)	1.69 (42.9)	1.31 (33.3)	2.38 (60.5)	3.00 (76.2)	1.00 (25.4)	0.22 (5.6)	5.26 (133.6)	0.69 (17.5)	0.38 (9.7)	1.00 (25.4)
60NSS-HF6-4	HF6	0.063 (1.59)	2.00 (50.8)	1.00 (25.4)	0.61 (15.6)	1.69 (42.9)	1.31 (33.3)	2.75 (68.9)	3.00 (76.2)	1.00 (25.4)	0.22 (5.6)	5.34 (135.8)	0.69 (17.5)	0.38 (9.7)	1.00 (25.4)
60NSS-HF9-4	HF9	0.078 (1.98)	2.62 (66.6)	1.31 (33.3)	0.95 (24.1)	1.75 (44.5)	1.31 (33.3)	3.03 (77.0)	3.00 (76.2)	1.00 (25.4)	0.28 (7.1)	5.67 (143.9)	0.69 (17.5)	0.38 (9.7)	1.50 (38.1)

1 on pressure

Ordering Number	Connection	Orifice in. (mm)	Dimensions, in. (mm)												
			A	B	C	D	D1	E	F	G	G1	H	M	N	Thickness
60NSS-HF4-5	HF4	0.063 (1.59)	2.00 (50.8)	1.00 (25.4)	0.47 (11.9)	1.31 (33.3)		2.38 (60.5)	3.00 (76.2)	1.00 (25.4)	0.22 (5.6)	5.02 (127.5)	0.69 (17.5)	0.38 (9.7)	1.00 (25.4)
60NSS-HF6-5	HF6	0.063 (1.59)	2.00 (50.8)	1.00 (25.4)	0.61 (15.6)	1.31 (33.3)		2.62 (66.6)	3.00 (76.2)	1.00 (25.4)	0.22 (5.6)	5.26 (133.5)	0.69 (17.5)	0.38 (9.7)	1.00 (25.4)
60NSS-HF9-5	HF9	0.078 (1.98)	2.62 (66.6)	1.31 (33.3)	0.95 (24.1)	1.31 (33.3)		2.81 (71.4)	3.00 (76.2)	1.00 (25.4)	0.28 (7.1)	5.45 (138.5)	0.69 (17.5)	0.38 (9.7)	1.50 (38.1)

2 stem manifold

Ordering Number	Connection	Orifice in. (mm)	Dimensions, in. (mm)												
			A	B	C	D	D1	E	F	G	G1	H	M	N	Thickness
60NSS-HF4-6	HF4	0.063 (1.59)	2.00 (50.8)	1.00 (25.4)	0.47 (11.9)	1.72 (43.69)	1.31 (33.3)	3.44 (87.4)	3.00 (76.2)	1.00 (25.4)	0.22 (5.6)	6.08 (154.5)	0.69 (17.5)	0.38 (9.7)	1.00 (25.4)
60NSS-HF6-6	HF6	0.063 (1.59)	2.00 (50.8)	1.00 (25.4)	0.61 (15.6)	1.88 (47.8)	1.31 (33.3)	3.75 (95.3)	3.00 (76.2)	1.00 (25.4)	0.22 (5.6)	6.39 (162.3)	0.69 (17.5)	0.38 (9.7)	1.00 (25.4)
60NSS-HF9-6	HF9	0.078 (1.98)	2.62 (66.6)	1.31 (33.3)	0.95 (24.1)	2.06 (52.3)	1.31 (33.3)	4.12 (104.6)	3.00 (76.2)	1.00 (25.4)	0.28 (7.1)	6.76 (171.8)	0.69 (17.5)	0.38 (9.7)	1.50 (38.1)

Notes: 1. G is the drill dimension of packing gland mounting hole.
2. G1 is the dimension of bracket mounting hole.
3. Panel mounting drill size: 0.25" all valves.
4. H is the dimension of stem in closed position.
5. All dimensions are for reference only and subject to change. For dimensions not shown above, please contact FITOK Group or our authorized distributors.

Pneumatic Needle Valves

Piston Style Air to Open (Normally Closed)

Features

- ◎ Air-to-open with spring return
- ◎ Positive shut-off with metal-to-metal seating
- ◎ Easy stem replacement
- ◎ Standard stem position indicator
- ◎ High actuator cycle life
- ◎ Anodized aluminum actuator to provide good corrosion and wear resistance
- ◎ Tested to 100,000 cycles at 100 psig (6.9 bar) with no leakage, no signs of wear or fatigue

Technical Data

Maximum working pressure for air operator		100 psig (6.9 bar)
Air operator temperature range		-10°F~200°F (-23°C~93°C)
Air operator material	Cylinder, piston, cover plates, spring housing	Anodized Aluminum
	Yoke	Stainless Steel
	O-ring	NBR
Air inlet connection		1/8" or 3/8" Female NPT

Dimensions

Basic Ordering Number	Air Inlet Connection	Area of Piston sq.in. (sq. cm)	A in. (mm)	B in. (mm)
10NSS-MF9-X-C	1/8" NPT	51.20 (330.3)	16.24 (412.5)	6.54 (166.0)
10NSS-MF12-X-C		92.58 (597.3)	20.72 (526.3)	8.58 (218.0)
10NSS-MF16-X-C	3/8" NPT	112.55 (726.1)	24.12 (612.7)	9.57 (243.0)
10NSS-FNS12-X-C	1/8" NPT	92.58 (597.3)	20.72 (526.3)	8.58 (218.0)
10NSS-FRT12-X-C		92.58 (597.3)	20.72 (526.3)	8.58 (218.0)
10NSS-FNS16-X-C	3/8" NPT	112.55 (726.1)	24.12 (612.7)	9.57 (243.0)
10NSS-FRT16-X-C		112.55 (726.1)	24.12 (612.7)	9.57 (243.0)
15NSS-DFF2-X-C	1/8" NPT	7.79 (50.3)	8.56 (217.3)	3.62 (92.0)
15NSS-DFF4-X-C		19.95 (128.7)	13.08 (332.3)	5.75 (146.0)
15NSS-DFF6-X-C		19.95 (128.7)	13.08 (332.3)	5.75 (146.0)
15NSS-DFF8-X-C		51.20 (330.3)	16.24 (412.5)	6.54 (166.0)
15NSS-FNS2-X-C		7.79 (50.3)	8.56 (217.3)	3.62 (92.0)
15NSS-FRT2-X-C		7.79 (50.3)	8.56 (217.3)	3.62 (92.0)
15NSS-FNS4-X-C		19.95 (128.7)	13.08 (332.3)	5.75 (146.0)
15NSS-FRT4-X-C		19.95 (128.7)	13.08 (332.3)	5.75 (146.0)
15NSS-FNS6-X-C		19.95 (128.7)	13.08 (332.3)	5.75(146.0)
15NSS-FRT6-X-C		19.95 (128.7)	13.08 (332.3)	5.75 (146.0)
15NSS-FNS8-X-C		51.20 (330.3)	16.24 (412.5)	6.54 (166.0)
15NSS-FRT8-X-C		51.20 (330.3)	16.24 (412.5)	6.54 (166.0)
20NSS-MF4-X-C		19.95 (128.7)	13.08 (332.3)	5.75 (146.0)
20NSS-MF6-X-C		19.95 (128.7)	13.08 (332.3)	5.75 (146.0)
20NSS-MF9-X-C		51.20 (330.3)	16.24 (412.5)	6.54 (166.0)
20NSS-MF12-X-C		92.58 (597.3)	20.72 (526.3)	8.58 (218.0)
20NSS-MF16-X-C	3/8" NPT	112.55 (726.1)	24.12 (612.7)	9.57 (243.0)
30NSS-HF4-X-C	1/8" NPT	19.95 (128.7)	13.08 (332.3)	5.75 (146.0)
30NSS-HF6-X-C		19.95 (128.7)	13.08 (332.3)	5.75 (146.0)
30NSS-HF9-X-C		19.95 (128.7)	13.08 (332.3)	5.75 (146.0)
60NSS-HF4-X-C		19.95 (128.7)	13.08 (332.3)	5.75 (146.0)
60NSS-HF6-X-C		19.95 (128.7)	13.08 (332.3)	5.75 (146.0)
60NSS-HF9-X-C		19.95 (128.7)	13.08 (332.3)	5.75 (146.0)

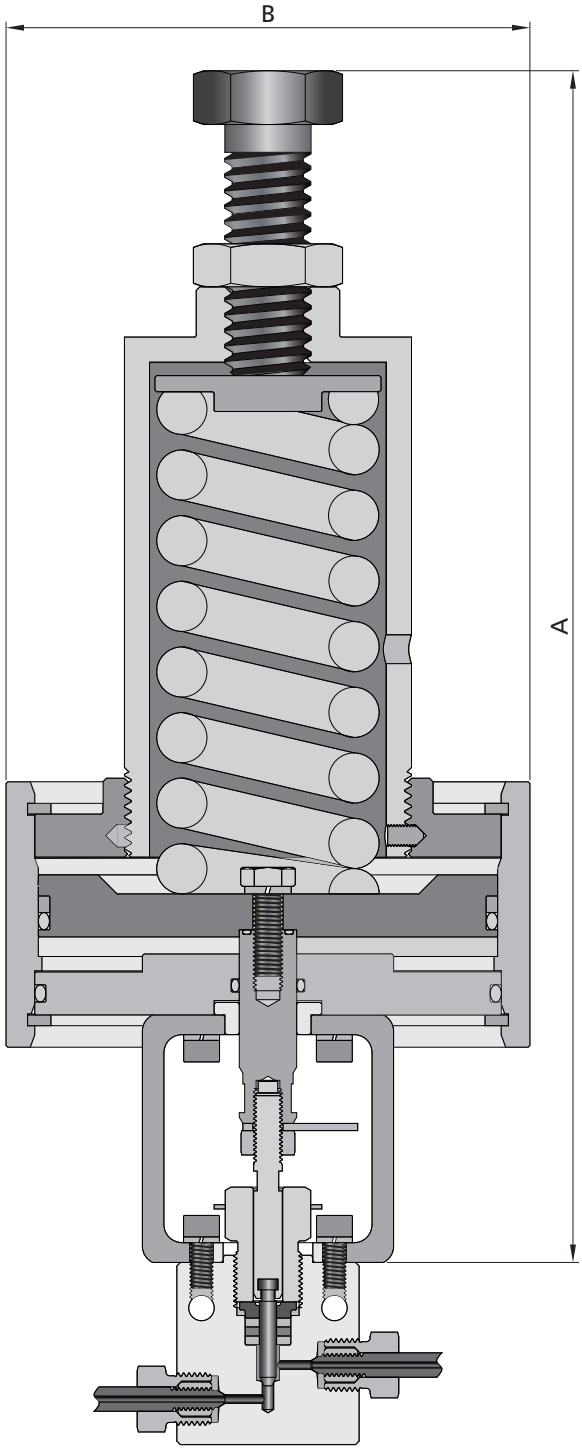

Notes: 1. -X: Designator of valve flow patterns. Valves are available in 5 different flow patterns (-1 to -6). For details, please refer to the FITOK Needle Valves catalog.
2. A is the dimension of stem in closed position.
3. All dimensions are for reference only and are subject to change. For dimensions not shown above, please contact FITOK Group or our authorized distributors.

Air Operator Technical Data

10N Series: 10,000 psig (690 bar)

Basic Ordering Number		System Pressure KSI (MPa)				Flow Coefficient (Cv)
		1-4 (6.9-27.6)	6 (41.4)	8 (55.2)	10 (69.0)	
10NSS-MF9-X-C	Air Pressure psig (bar)	40 (2.8)	50 (3.5)	60 (4.1)	65 (4.5)	1.75
	Spring Pre-Compression in. (mm)	0.17 (4.2)	0.25 (6.3)	0.33 (8.4)	0.41 (10.5)	
	Stem Travel in. (mm)	0.26 (6.5)	0.26 (6.5)	0.26 (6.5)	0.26 (6.5)	
10NSS-MF12-X-C	Air Pressure psig (bar)	45 (3.1)	50 (3.5)	60 (4.1)	70 (4.8)	2.80
	Spring Pre-Compression in. (mm)	0.23 (5.8)	0.34 (8.7)	0.46 (11.6)	0.57 (14.5)	
	Stem Travel in. (mm)	0.36 (9.2)	0.36 (9.2)	0.36 (9.2)	0.36 (9.2)	
10NSS-MF16-X-C	Air Pressure psig (bar)	50 (3.5)	60 (4.1)	70 (4.8)	80 (5.5)	5.20
	Spring Pre-Compression in. (mm)	0.29 (7.4)	0.44 (11.1)	0.58 (14.8)	0.73 (18.5)	
	Stem Travel in. (mm)	0.41 (10.3)	0.41 (10.3)	0.41 (10.3)	0.41 (10.3)	
10NSS-FNS12-X-C 10NSS-FRT12-X-C	Air Pressure psig (bar)	40 (2.8)	45 (3.1)	50 (3.5)	60 (4.1)	2.09
	Spring Pre-Compression in. (mm)	0.17 (4.4)	0.26 (6.5)	0.34 (8.7)	0.43 (10.9)	
	Stem Travel in. (mm)	0.36 (9.2)	0.36 (9.2)	0.36 (9.2)	0.36 (9.2)	
10NSS-FNS16-X-C 10NSS-FRT16-X-C	Air Pressure psig (bar)	45 (3.1)	50 (3.5)	60 (4.1)	65 (4.5)	4.40
	Spring Pre-Compression in. (mm)	0.20 (5.1)	0.30 (7.7)	0.41 (10.3)	0.51 (12.9)	
	Stem Travel in. (mm)	0.41 (10.3)	0.41 (10.3)	0.41 (10.3)	0.41 (10.3)	

Notes: 1. -X: Designator of valve flow patterns. Valves are available in 5 different flow patterns (-1 to -6). For details, please refer to the FITOK Needle Valves catalog.
2. Cv values shown are for 2-way straight valve pattern. For 2-way angle pattern, increase Cv value by 50% (based on water).
3. All dimensions are for reference only and are subject to change.

15N Series: 15,000 psig (1034 bar)

Basic Ordering Number		System Pressure KSI (MPa)						Flow Coefficient (Cv)
		1-6 (6.9-41.4)	8 (55.2)	10 (69.0)	12 (82.7)	14 (96.5)	15 (103.4)	
15NSS-DFF2-X-C	Air Pressure psig (bar)	60 (4.1)	65 (4.5)	75 (5.2)	80 (5.5)	90 (6.2)	95 (6.6)	0.10
	Spring Pre-Compression in. (mm)	0.10 (2.5)	0.13 (3.3)	0.16 (4.1)	0.19 (4.9)	0.22 (5.7)	0.24 (6.1)	
	Stem Travel in. (mm)	0.14 (3.5)	0.14 (3.5)	0.14 (3.5)	0.14 (3.5)	0.14 (3.5)	0.14 (3.5)	
15NSS-DFF4-X-C 15NSS-DFF6-X-C	Air Pressure psig (bar)	50 (3.5)	55 (3.8)	60 (4.1)	65 (4.5)	70 (4.8)	75 (5.2)	0.54 (15NSS-DFF4-X-C) 0.95 (15NSS-DFF6-X-C)
	Spring Pre-Compression in. (mm)	0.11 (2.9)	0.15 (3.8)	0.19 (4.8)	0.23 (5.8)	0.26 (6.7)	0.28 (7.2)	
	Stem Travel in. (mm)	0.19 (4.9)	0.19 (4.9)	0.19 (4.9)	0.19 (4.9)	0.19 (4.9)	0.19 (4.9)	
15NSS-DFF8-X-C	Air Pressure psig (bar)	50 (3.5)	60 (4.1)	70 (4.8)	75 (5.2)	85 (5.9)	90 (6.2)	1.90
	Spring Pre-Compression in. (mm)	0.27 (6.8)	0.36 (9.1)	0.45 (11.4)	0.54 (13.6)	0.63 (15.9)	0.67 (17.0)	
	Stem Travel in. (mm)	0.26 (6.5)	0.26 (6.5)	0.26 (6.5)	0.26 (6.5)	0.26 (6.5)	0.26 (6.5)	
15NSS-FNS2-X-C 15NSS-FRT2-X-C	Air Pressure psig (bar)	60 (4.1)	65 (4.5)	75 (5.2)	80 (5.5)	90 (6.2)	95 (6.6)	0.07
	Spring Pre-Compression in. (mm)	0.10 (2.5)	0.13 (3.3)	0.16 (4.1)	0.19 (4.9)	0.22 (5.7)	0.24 (6.1)	
	Stem Travel in. (mm)	0.14 (3.5)	0.14 (3.5)	0.14 (3.5)	0.14 (3.5)	0.14 (3.5)	0.14 (3.5)	
15NSS-FNS4-X-C 15NSS-FRT4-X-C	Air Pressure psig (bar)	50 (3.5)	55 (3.8)	60 (4.1)	65 (4.5)	70 (4.8)	75 (5.2)	0.47
	Spring Pre-Compression in. (mm)	0.11 (2.9)	0.15 (3.8)	0.19 (4.8)	0.23 (5.8)	0.26 (6.7)	0.28 (7.2)	
	Stem Travel in. (mm)	0.19 (4.9)	0.19 (4.9)	0.19 (4.9)	0.19 (4.9)	0.19 (4.9)	0.19 (4.9)	
15NSS-FNS6-X-C 15NSS-FRT6-X-C	Air Pressure psig (bar)	50 (3.5)	55 (3.8)	60 (4.1)	65 (4.5)	70 (4.8)	75 (5.2)	0.59
	Spring Pre-Compression in. (mm)	0.11 (2.9)	0.15 (3.8)	0.19 (4.8)	0.23 (5.8)	0.26 (6.7)	0.28 (7.2)	
	Stem Travel in. (mm)	0.19 (4.9)	0.19 (4.9)	0.19 (4.9)	0.19 (4.9)	0.19 (4.9)	0.19 (4.9)	
15NSS-FNS8-X-C 15NSS-FRT8-X-C	Air Pressure psig (bar)	45 (3.1)	50 (3.5)	60 (4.1)	65 (4.5)	70 (4.8)	75 (5.2)	1.04
	Spring Pre-Compression in. (mm)	0.20 (5.0)	0.26 (6.6)	0.33 (8.3)	0.39 (9.9)	0.46 (11.6)	0.49 (12.4)	
	Stem Travel in. (mm)	0.26 (6.5)	0.26 (6.5)	0.26 (6.5)	0.26 (6.5)	0.26 (6.5)	0.26 (6.5)	

Notes: 1. -X: Designator of valve flow patterns. Valves are available in 5 different flow patterns (-1 to -6). For details, please refer to the FITOK Needle Valves catalog.
2. Cv values shown are for 2-way straight valve pattern. For 2-way angle pattern, increase Cv value by 50% (based on water).
3. All dimensions are for reference only and are subject to change.

20N Series: 20,000 psig (1379 bar)

Basic Ordering Number		System Pressure KSI (MPa)									Flow Coefficient (Cv)
		1-4 (6.9-27.6)	6 (41.4)	8 (55.2)	10 (69.0)	12 (82.7)	14 (96.5)	16 (110.3)	18 (124.1)	20 (137.9)	
20NSS-MF4-X-C 20NSS-MF6-X-C	Air Pressure psig (bar)	40 (2.8)	50 (3.5)	55 (3.8)	60 (4.1)	65 (4.5)	70 (4.8)	75 (5.2)	80 (5.5)	90 (6.2)	0.29 (20NSS-MF4-X-C) 0.62 (20NSS-MF6-X-C)
	Spring Pre-Compression in. (mm)	0.07 (1.9)	0.11 (2.9)	0.15 (3.8)	0.19 (4.8)	0.23 (5.8)	0.26 (6.7)	0.30 (7.7)	0.34 (8.6)	0.38 (9.6)	
	Stem Travel in. (mm)	0.19 (4.9)	0.19 (4.9)	0.19 (4.9)	0.19 (4.9)	0.19 (4.9)	0.19 (4.9)	0.19 (4.9)	0.19 (4.9)	0.19 (4.9)	
20NSS-MF9-X-C	Air Pressure psig (bar)	40 (2.8)	45 (3.1)	50 (3.5)	60 (4.1)	65 (4.5)	70 (4.8)	75 (5.2)	80 (5.5)	90 (6.2)	1.30
	Spring Pre-Compression in. (mm)	0.13 (3.3)	0.20 (5.0)	0.26 (6.6)	0.33 (8.3)	0.39 (9.9)	0.46 (11.6)	0.52 (13.2)	0.59 (14.9)	0.65 (16.5)	
	Stem Travel in. (mm)	0.26 (6.5)	0.26 (6.5)	0.26 (6.5)	0.26 (6.5)	0.26 (6.5)	0.26 (6.5)	0.26 (6.5)	0.26 (6.5)	0.26 (6.5)	
20NSS-MF12-X-C	Air Pressure psig (bar)	40 (2.8)	45 (3.1)	50 (3.5)	60 (4.1)	65 (4.5)	70 (4.8)	75 (5.2)	85 (5.9)	90 (6.2)	2.41
	Spring Pre-Compression in. (mm)	0.17 (4.4)	0.26 (6.5)	0.34 (8.7)	0.43 (10.9)	0.52 (13.1)	0.60 (15.3)	0.69 (17.4)	0.77 (19.6)	0.86 (21.8)	
	Stem Travel in. (mm)	0.36 (9.2)	0.36 (9.2)	0.36 (9.2)	0.36 (9.2)	0.36 (9.2)	0.36 (9.2)	0.36 (9.2)	0.36 (9.2)	0.36 (9.2)	
20NSS-MF16-X-C	Air Pressure psig (bar)	45 (3.1)	50 (3.5)	60 (4.1)	65 (4.5)	70 (4.8)	80 (5.5)	85 (5.9)	95 (6.6)	100 (6.9)	4.40
	Spring Pre-Compression in. (mm)	0.20 (5.1)	0.30 (7.7)	0.41 (10.3)	0.51 (12.9)	0.61 (15.4)	0.71 (18.0)	0.81 (20.6)	0.91 (23.1)	1.01 (25.7)	
	Stem Travel in. (mm)	0.41 (10.3)	0.41 (10.3)	0.41 (10.3)	0.41 (10.3)	0.41 (10.3)	0.41 (10.3)	0.41 (10.3)	0.41 (10.3)	0.41 (10.3)	

Notes: 1. -X: Designator of valve flow patterns. Valves are available in 5 different flow patterns (-1 to -6). For details, please refer to the FITOK Needle Valves catalog.
2. Cv values shown are for 2-way straight valve pattern. For 2-way angle pattern, increase Cv value by 50% (based on water).
3. All dimensions are for reference only and are subject to change.

30N Series: 30,000 psig (2068 bar)

Basic Ordering Number		System Pressure KSI (MPa)											Flow Coefficient (Cv)
		1-10 (6.9-69.0)	12 (82.7)	14 (96.5)	16 (110.3)	18 (124.1)	20 (137.9)	22 (151.7)	24 (165.5)	26 (179.3)	28 (193.1)	30 (206.8)	
30NSS-HF4-X-C 30NSS-HF6-X-C 30NSS-HF9-X-C	Air Pressure psig (bar)	55 (3.8)	60 (4.1)	65 (4.5)	65 (4.5)	70 (4.8)	75 (5.2)	80 (5.5)	85 (5.9)	90 (6.2)	95 (6.6)	100 (6.9)	0.12 (30NSS-HF4-X-C) 0.22 (30NSS-HF6-X-C) 0.31 (30NSS-HF9-X-C)
	Spring Pre-Compression in. (mm)	0.14 (3.8)	0.18 (4.6)	0.21 (5.4)	0.24 (6.1)	0.27 (6.9)	0.30 (7.7)	0.33 (8.4)	0.36 (9.2)	0.39 (10)	0.42 (10.7)	0.45 (11.5)	
	Stem Travel in. (mm)	0.19 (4.9)	0.19 (4.9)	0.19 (4.9)	0.19 (4.9)	0.19 (4.9)	0.19 (4.9)	0.19 (4.9)	0.19 (4.9)	0.19 (4.9)	0.19 (4.9)	0.19 (4.9)	

Notes: 1. -X: Designator of valve flow patterns (-1 to -6). For details, please refer to the FITOK Needle Valves catalog.
2. Cv values shown are for 2-way straight valve pattern. For 2-way angle pattern, increase Cv value by 50% (based on water).
3. All dimensions are for reference only and are subject to change.

60N Series: 60,000 psig (4137 bar)

Basic Ordering Number		System Pressure KSI (MPa)										Flow Coefficient (Cv)
		1-15 (6.9-103.4)	20 (137.9)	25 (172.4)	30 (206.8)	35 (241.3)	40 (275.8)	45 (310.3)	50 (344.7)	55 (379.2)	60 (413.7)	
60NSS-HF4-X-C 60NSS-HF6-X-C 60NSS-HF9-X-C	Air Pressure psig (bar)	55 (3.8)	65 (4.5)	65 (4.5)	75 (5.2)	75 (5.2)	85 (5.9)	95 (6.6)	95 (6.6)	95 (6.6)	95 (6.6)	0.08 (60NSS-HF4-X-C)
	Spring Pre-Compression in. (mm)	0.12 (3.2)	0.19 (4.8)	0.19 (4.8)	0.25 (6.4)	0.25 (6.4)	0.31 (7.9)	0.38 (9.7)	0.38 (9.7)	0.44 (11.2)	0.50 (12.7)	0.09 (60NSS-HF6-X-C)
	Stem Travel in. (mm)	0.19 (4.9)	0.19 (4.9)	0.19 (4.9)	0.19 (4.9)	0.19 (4.9)	0.19 (4.9)	0.19 (4.9)	0.19 (4.9)	0.19 (4.9)	0.13 (3.2)	0.14 (60NSS-HF9-X-C)

Notes: 1. -X: Designator of valve flow patterns. Valves are available in 5 different flow patterns (-1 to -6). For details, please refer to the FITOK Needle Valves catalog.
2. Cv values shown are for 2-way straight valve pattern. For 2-way angle pattern, increase Cv value by 50% (based on water).
3. All dimensions are for reference only and are subject to change.

Piston Style Air to Close (Normally Open)

Features

- Air-to-close with spring return
- Positive shut-off with metal-to-metal seating
- Easy stem replacement
- Standard stem position indicator
- High actuator cycle life
- Anodized aluminum actuator to provide good corrosion and wear resistance
- Tested to 100,000 cycles at 100 psig (6.9 bar) with no leakage, no signs of wear or fatigue

Technical Data

Maximum working pressure for air operator		100 psig (6.9 bar)
Air operator temperature range		-10°F~200°F (-23°C~93°C)
Air operator material	Cylinder, piston, cover plates, spring housing	Anodized Aluminum
	Yoke	Stainless Steel
	O-ring	NBR
Air inlet connection		1/8" or 3/8" Female NPT

Dimensions

Basic Ordering Number	Air Inlet Connection	Area of Piston sq.in. (sq. cm)	A in. (mm)	B in. (mm)
10NSS-MF9-X-O	1/8" NPT	51.20 (330.3)	8.27 (210.0)	6.54 (166.0)
10NSS-MF12-X-O		92.58 (597.3)	10.55 (268.0)	8.58 (218.0)
10NSS-MF16-X-O	3/8" NPT	112.55 (726.1)	12.77 (324.4)	9.57 (243.0)
10NSS-FNS12-X-O	1/8" NPT	92.58 (597.3)	10.55 (268.0)	8.58 (218.0)
10NSS-FRT12-X-O		92.58 (597.3)	10.55 (268.0)	8.58 (218.0)
10NSS-FNS16-X-O	3/8" NPT	112.55 (726.1)	12.77 (324.4)	9.57 (243.0)
10NSS-FRT16-X-O		112.55 (726.1)	12.77 (324.4)	9.57 (243.0)
15NSS-DFF2-X-O	1/8" NPT	7.79 (50.3)	8.56 (217.3)	3.62 (92.0)
15NSS-DFF4-X-O		19.95 (128.7)	5.94 (151.0)	5.75 (146.0)
15NSS-DFF6-X-O		19.95 (128.7)	5.94 (151.0)	5.75 (146.0)
15NSS-DFF8-X-O		51.20 (330.3)	8.27 (210.0)	6.54 (166.0)
15NSS-FNS2-X-O		7.79 (50.3)	8.56 (217.3)	3.62 (92.0)
15NSS-FRT2-X-O		7.79 (50.3)	8.56 (217.3)	3.62 (92.0)
15NSS-FNS4-X-O		19.95 (128.7)	5.94 (151.0)	5.75 (146.0)
15NSS-FRT4-X-O		19.95 (128.7)	5.94 (151.0)	5.75 (146.0)
15NSS-FNS6-X-O		19.95 (128.7)	5.94 (151.0)	5.75 (146.0)
15NSS-FRT6-X-O		19.95 (128.7)	5.94 (151.0)	5.75 (146.0)
15NSS-FNS8-X-O		51.20 (330.3)	8.27 (210.0)	6.54 (166.0)
15NSS-FRT8-X-O		51.20 (330.3)	8.27 (210.0)	6.54 (166.0)
20NSS-MF4-X-O		19.95 (128.7)	5.94 (151.0)	5.75 (146.0)
20NSS-MF6-X-O		19.95 (128.7)	5.94 (151.0)	5.75 (146.0)
20NSS-MF9-X-O		51.20 (330.3)	8.27 (210.0)	6.54 (166.0)
20NSS-MF12-X-O		92.58 (597.3)	10.55 (268.0)	8.58 (218.0)
20NSS-MF16-X-O	3/8" NPT	112.55 (726.1)	12.77 (324.4)	9.57 (243.0)
30NSS-HF4-X-O	1/8" NPT	19.95 (128.7)	5.94 (151.0)	5.75 (146.0)
30NSS-HF6-X-O		19.95 (128.7)	5.94 (151.0)	5.75 (146.0)
30NSS-HF9-X-O		19.95 (128.7)	5.94 (151.0)	5.75 (146.0)
60NSS-HF4-X-O		19.95 (128.7)	5.94 (151.0)	5.75 (146.0)
60NSS-HF6-X-O		19.95 (128.7)	5.94 (151.0)	5.75 (146.0)
60NSS-HF9-X-O		19.95 (128.7)	5.94 (151.0)	5.75 (146.0)

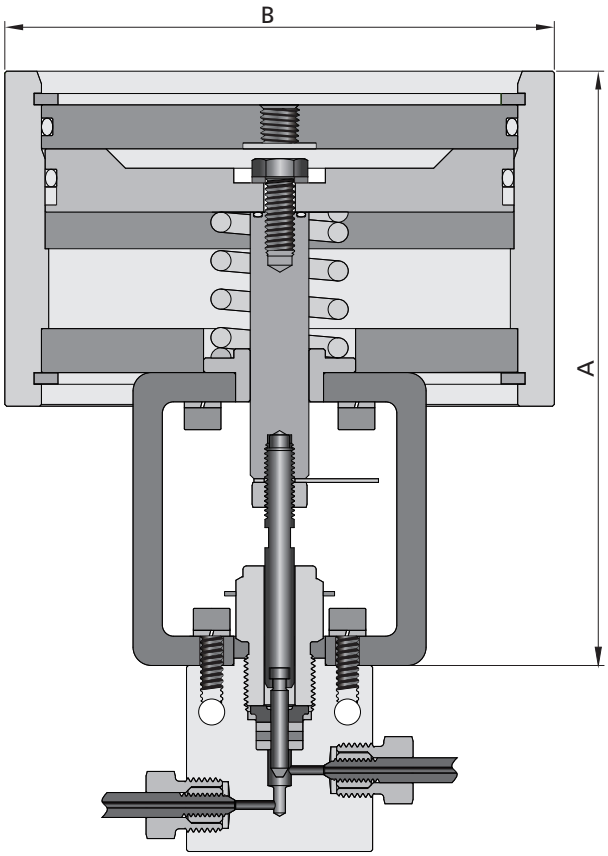

Notes: 1. -X: Designator of valve flow patterns. Valves are available in 5 different flow patterns (-1 to -6).
For details, please refer to the FITOK Needle Valves catalog.
2. All dimensions are for reference only and are subject to change.
For dimensions not shown above, please contact FITOK Group or our authorized distributors.

Air Operator Technical Data

10N Series: 10,000 psig (690 bar)

Basic Ordering Number		System Pressure KSI (MPa)				Stem Travel in. (mm)	Flow Coefficient (Cv)
		1-4 (6.9-27.6)	6 (41.4)	8 (55.2)	10 (69.0)		
10NSS-MF9-X-O	Air Pressure psig (bar)	25 (1.7)	35 (2.4)	40 (2.8)	50 (3.5)	0.24 (6.0)	1.75
10NSS-MF12-X-O	Air Pressure psig (bar)	25 (1.7)	35 (2.4)	45 (3.1)	50 (3.5)	0.35 (9.0)	2.80
10NSS-MF16-X-O	Air Pressure psig (bar)	30 (2.1)	40 (2.8)	50 (3.5)	60 (4.2)	0.39 (10.0)	5.20
10NSS-FNS12-X-O 10NSS-FRT12-X-O	Air Pressure psig (bar)	25 (1.7)	30 (2.1)	35 (2.4)	40 (2.8)	0.35 (9.0)	2.09
10NSS-FNS16-X-O 10NSS-FRT16-X-O	Air Pressure psig (bar)	25 (1.7)	30 (2.1)	40 (2.8)	45 (3.1)	0.39 (10.0)	3.40

Notes: 1. -X: Designator of valve flow patterns. Valves are available in 5 different flow patterns (-1 to -6). For details, please refer to the FITOK Needle Valves catalog.
2. Cv values shown are for 2-way straight valve pattern. For 2-way angle pattern, increase Cv value by 50% (based on water).
3. All dimensions are for reference only and are subject to change.

15N Series: 15,000 psig (1034 bar)

Basic Ordering Number		System Pressure KSI (MPa)							Stem Travel in. (mm)	Flow Coefficient (Cv)
		1-4 (6.9-27.6)	6 (41.4)	8 (55.2)	10 (69.0)	12 (82.7)	14 (96.5)	15 (103.4)		
15NSS-DFF2-X-O	Air Pressure psig (bar)	45 (3.1)	55 (3.8)	60 (4.2)	70 (4.8)	75 (5.2)	85 (5.9)	90 (6.2)	0.12 (3.0)	0.10
15NSS-DFF4-X-O	Air Pressure psig (bar)	30 (2.1)	35 (2.4)	40 (2.8)	50 (3.5)	55 (3.8)	60 (4.2)	60 (4.2)	0.19 (4.9)	0.54
15NSS-DFF6-X-O										0.95
15NSS-DFF8-X-O	Air Pressure psig (bar)	25 (1.7)	35 (2.4)	45 (3.1)	50 (3.5)	60 (4.2)	70 (4.8)	75 (5.2)	0.24 (6.0)	1.90
15NSS-FNS2-X-O 15NSS-FRT2-X-O	Air Pressure psig (bar)	65 (4.5)	75 (5.2)	80 (5.5)	90 (6.2)	95 (6.6)	100 (6.9)	100 (6.9)	0.12 (3.0)	0.07
15NSS-FNS4-X-O 15NSS-FRT4-X-O	Air Pressure psig (bar)	30 (2.1)	35 (2.4)	40 (2.8)	50 (3.5)	55 (3.8)	60 (4.2)	60 (4.2)	0.19 (4.9)	0.47
15NSS-FNS6-X-O 15NSS-FRT6-X-O	Air Pressure psig (bar)	30 (2.1)	35 (2.4)	40 (2.8)	50 (3.5)	55 (3.8)	60 (4.2)	60 (4.2)	0.19 (4.9)	0.59
15NSS-FNS8-X-O 15NSS-FRT8-X-O	Air Pressure psig (bar)	20 (1.4)	30 (2.1)	35 (2.4)	40 (2.8)	45 (3.1)	55 (3.8)	55 (3.8)	0.24 (6.0)	1.04

Notes: 1. -X: Designator of valve flow patterns. Valves are available in 5 different flow patterns (-1 to -6). For details, please refer to the FITOK Needle Valves catalog.
2. Cv values shown are for 2-way straight valve pattern. For 2-way angle pattern, increase Cv value by 50% (based on water).
3. All dimensions are for reference only and are subject to change.

20N Series: 20,000 psig (1379 bar)

Basic Ordering Number		System Pressure KSI (MPa)									Stem Travel in. (mm)	Flow Coefficient (Cv)
		1-4 (6.9-27.6)	6 (41.4)	8 (55.2)	10 (69.0)	12 (82.7)	14 (96.5)	16 (110.3)	18 (124.1)	20 (137.9)		
20NSS-MF4-X-O	Air Pressure psig (bar)	30 (2.1)	35 (2.4)	40 (2.8)	50 (3.5)	55 (3.8)	60 (4.2)	65 (4.5)	70 (4.8)	75 (5.2)	0.19 (4.9)	0.29
20NSS-MF6-X-O												0.62
20NSS-MF9-X-O	Air Pressure psig (bar)	20 (1.4)	30 (2.1)	35 (2.4)	40 (2.8)	45 (3.1)	55 (3.8)	60 (4.2)	65 (4.5)	70 (4.8)	0.24 (6.0)	1.30
20NSS-MF12-X-O	Air Pressure psig (bar)	25 (1.7)	30 (2.1)	35 (2.4)	40 (2.8)	45 (3.1)	55 (3.8)	60 (4.2)	65 (4.5)	70 (4.8)	0.35 (9.0)	2.41
20NSS-MF16-X-O	Air Pressure psig (bar)	25 (1.7)	30 (2.1)	40 (2.8)	45 (3.1)	55 (3.8)	60 (4.2)	65 (4.5)	75 (5.2)	80 (5.5)	0.39 (10.0)	3.40

Notes: 1. -X: Designator of valve flow patterns. Valves are available in 5 different flow patterns (-1 to -6). For details, please refer to the FITOK Needle Valves catalog.
2. Cv values shown are for 2-way straight valve pattern. For 2-way angle pattern, increase Cv value by 50% (based on water).
3. All dimensions are for reference only and are subject to change.

30N Series: 30,000 psig (2068 bar)

Basic Ordering Number		System Pressure KSI (MPa)									Stem Travel in. (mm)	Flow Coefficient (Cv)
		1-12 (6.9-82.7)	14 (96.5)	16 (110.3)	18 (124.1)	20 (137.9)	22 (151.7)	24 (165.7)	26 (179.3)	28 (193.1)	30 (206.8)	
30NSS-HF4-X-O	Air Pressure psig (bar)	45 (3.1)	50 (3.5)	55 (3.8)	60 (4.1)	65 (4.5)	70 (4.8)	75 (5.2)	80 (5.5)	85 (5.9)	85 (5.9)	0.12
30NSS-HF6-X-O												0.22
30NSS-HF9-X-O												0.31

Notes: 1. -X: Designator of valve flow patterns. Valves are available in 5 different flow patterns (-1 to -6). For details, please refer to the FITOK Needle Valves catalog.
2. Cv values shown are for 2-way straight valve pattern. For 2-way angle pattern, increase Cv value by 50% (based on water).
3. All dimensions are for reference only and are subject to change.

60N Series: 60,000 psig (4137 bar)

Basic Ordering Number		System Pressure KSI (MPa)									Stem Travel in. (mm)	Flow Coefficient (Cv)
		1-20 (6.9-137.9)	25 (172.4)	30 (206.8)	35 (241.3)	40 (275.8)	45 (310.3)	50 (344.7)	55 (379.2)	60 (413.7)		
60NSS-HF4-X-O	Air Pressure psig (bar)	35 (2.4)	40 (2.8)	50 (3.5)	55 (3.8)	65 (4.5)	70 (4.8)	75 (5.2)	85 (5.9)	90 (6.2)	0.19 (4.9)	0.08
60NSS-HF6-X-O												0.09
60NSS-HF9-X-O												0.14

Notes: 1. -X: Designator of valve flow patterns. Valves are available in 5 different flow patterns (-1 to -6). For details, please refer to the FITOK Needle Valves catalog.
2. Cv values shown are for 2-way straight valve pattern. For 2-way angle pattern, increase Cv value by 50% (based on water).
3. All dimensions are for reference only and are subject to change.

Ordering Number Description

15NSS - DFF4 - RTG2 - C - CE

Series	Body Material	Connection Type	Connection Size	Stem Tip	Packing	Flow Pattern	Pneumatic Actuator Type	CE Certified
10N	SS 316 SS	For 10N Series	2 1/8"	Vee	PTFE	1 Straight	None	None
15N		MF Female Medium Pressure	4 1/4"	R Regulating (for manual only)	Nylon (60N Only)	2 Angle	C Normally Closed Pneumatic Actuator	CE CE Certified
20N		FNS Female NPT	6 3/8"		TG RPTFE Glass	3 Angle (Replaceable Seat)	O Normally Open Pneumatic Actuator	
30N		FRT Female ISO Tapered Thread	8 1/2"		G Graphite (10N, 15N and 20N Series Only)	4 3-Way/2 on Pressure		
60N		For 15N Series	9 9/16"			5 3-Way/1 on Pressure		
		DFF Female 20D Series	12 3/4"		HT Extended Stuffing Box with Graphite (10N and 20N Only)	6 3-Way/2-Stem Manifold		
		FNS Female NPT	16 1"					
		FRT Female ISO Tapered Thread						
		For 20N Series						
		MF Female Medium Pressure						
		For 30N/60N Series						
		HF Female High Pressure						

Notes: 1. Pneumatic needle valves are on/off valves, and will not regulate flow. It is not recommended to order pneumatic valves with regulating stems.
2. For more details regarding 20D Series and Medium/High Pressure connections, please see **Connection Information** on A-02.
3. "Ordering Number Description" is a reference to understand the combination rules of FITOK product part number. Not all combinations are available.

Stem Types

Two types of stems are offered by FITOK: Vee and Regulating. Both Vee and Regulating stems are interchangeable on most valves and provide bubble-tight shut-off against liquids and gases.

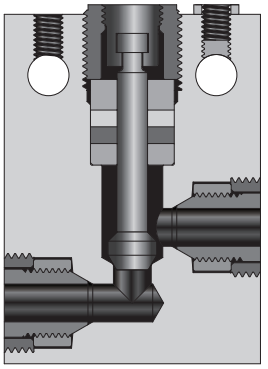

Vee Stem

The Vee stem is used for direct on-off, metal-to-metal shut-off with quick-opening flow characteristics.

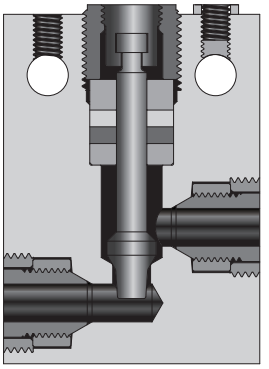

Regulating Stem

In some applications, more precise flow control is required than is possible with a Vee stem. For these cases, FITOK offers a non-rotating, two-piece regulating stem which can be used for both control and shut-off.

Check Valves

10C, 10CO Series: 10,000 psig (690 bar)
15C, 15CO Series: 15,000 psig (1034 bar)
20C, 20CO Series: 20,000 psig (1379 bar)
60C, 60CO Series: 60,000 psig (4137 bar)



Contents

10C Series

Pipe O-Ring Check Valves E-53

10CO Series

Pipe Ball Check Valves E-54

15C Series

O-Ring Check Valves E-55

Pipe O-Ring Check Valves E-56

15CO Series

Ball Check Valves E-57

Pipe Ball Check Valves E-58

20C Series

O-Ring Check Valves E-59

20CO Series

Ball Check Valves E-60

60C Series

O-Ring Check Valves E-61

60CO Series

Ball Check Valves E-62

Ordering Number Description

E-63

10C Series: 10,000 psig (690 bar)

Pipe O-Ring Check Valves

Features

- Cracking pressure: 14 psig~26 psig (0.97 bar~1.79 bar)
- Fluorocarbon FKM O-ring for operation from 0°F to 400°F (-17.8°C to 204°C); other materials of O-rings available
- Provide unidirectional flow and tight shut-off for liquids and gases with high reliability. When differential drops below cracking pressure, valve shuts off (not for use as relief valve)
- Resilient O-ring seat design ensures noise-free closing and reliable reverse flow prevention

Standard Materials of Construction

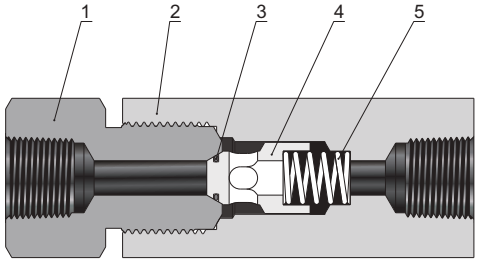

Item	Component	Material Grade
1	*Cover Gland*	*316 SS*
2	*Valve Body*	*316 SS*
3	*O-Ring*	*Fluorocarbon FKM*
4	*Poppet*	*316 SS*
5	*Spring*	*300 Series Stainless Steel*
	Lubricant	Molybdenum Disulfide/Fluorinated-Based

Wetted components listed in italics.

Ordering Information and Dimensions

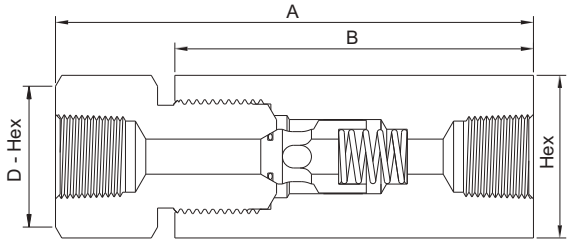

Ordering Number	Connection	Orifice in. (mm)	Cv	Dimensions, in. (mm)				Working Pressure psig (bar)
				A	B	D - Hex	Hex	
10CSS-FNS12	FNS12	0.52 (13.21)	4.70	6.11 (155.3)	4.75 (120.7)	1.5 (38.1)	1.75 (44.5)	10,000 (690)
10CSS-FNS16	FNS16	0.69 (17.53)	7.40	7.33 (186.2)	5.75 (146.1)	1.75 (44.5)	1.88 (47.8)	10,000 (690)

Notes: 1. For other pipe connections, please refer to 15C Series Pipe O-Ring Check Valves for details.
2. Dimensions are for reference only and are subject to change. For dimensions not shown above, please contact FITOK Group or our authorized distributors.

10CO Series: 10,000 psig (690 bar)

Pipe Ball Check Valves

Features

- Working temperature range: -110°F to 400°F (-79°C to 204°C)
- Prevent reverse flow where leak-tight shut-off is not mandatory (not for use as relief valve)
- An integral design of the ball and poppet to assure positive, in-line seating without "chatter". Poppet designed essentially for axial flow with minimum pressure drop
- Optional materials of cover gland and ball poppet for longer life

Standard Materials of Construction

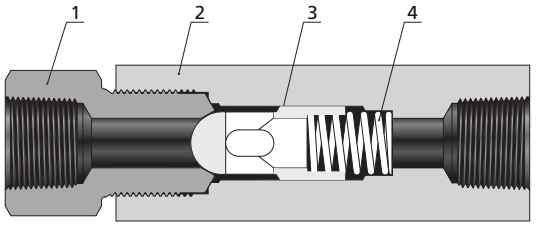

Item	Component	Material Grade
1	*Cover Gland*	*316 SS*
2	*Valve Body*	*316 SS*
3	*Ball Poppet*	*S17400 SS*
4	*Spring*	*300 Series Stainless Steel*
	Lubricant	Molybdenum Disulfide/Fluorinated-Based

Wetted components listed in italics.

Ordering Information and Dimensions

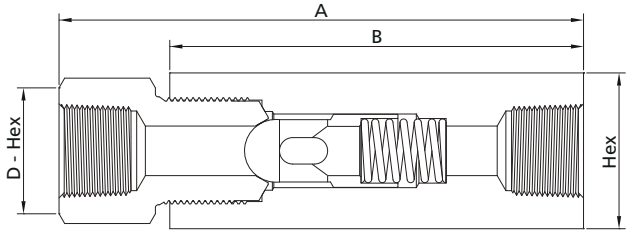

Ordering Number	Connection	Orifice in. (mm)	Cv	Dimensions, in. (mm)				Working Pressure psig (bar)
				A	B	D - Hex	Hex	
10COSS-FNS12	FNS12	0.52 (13.21)	4.70	6.11 (155.3)	4.75 (120.7)	1.5 (38.1)	1.75 (44.5)	10,000 (690)
10COSS-FNS16	FNS16	0.69 (17.53)	7.40	7.33 (186.2)	5.75 (146.1)	1.75 (44.5)	1.88 (47.8)	10,000 (690)

Notes: 1. For other pipe connections, please refer to 15CO Series Pipe Ball Check Valves for details.
2. Dimensions are for reference only and are subject to change. For dimensions not shown above, please contact FITOK Group or our authorized distributors.

15C Series: 15,000 psig (1034 bar)

O-Ring Check Valves

Features

- Cracking pressure: 14 psig~26 psig (0.97 bar~1.79 bar)
- Fluorocarbon FKM O-ring for operation from 0°F to 400°F (-17.8°C to 204°C); other materials of O-rings available
- Tubing sizes available in 1/4", 3/8" and 1/2"
- Provide unidirectional flow and tight shut-off for liquids and gases with high reliability. When differential drops below cracking pressure, valve shuts off (not for use as relief valve)
- Resilient O-ring seat design ensures noise-free closing and reliable reverse flow prevention

Standard Materials of Construction

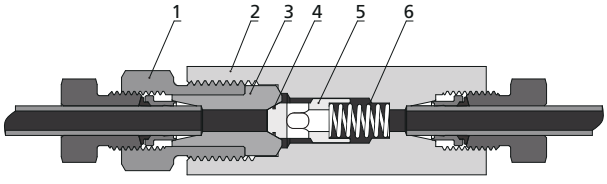

Item	Component	Material Grade
1	Cover Gland	316 SS
2	*Valve Body*	*316 SS*
3	*Cover*	*316SS*
4	*O-Ring*	*Fluorocarbon FKM*
5	*Poppet*	*316 SS*
6	*Spring*	*300 Series Stainless Steel*
	Lubricant	Molybdenum Disulfide/Fluorinated-Based

Wetted components listed in italics.

Ordering Information and Dimensions

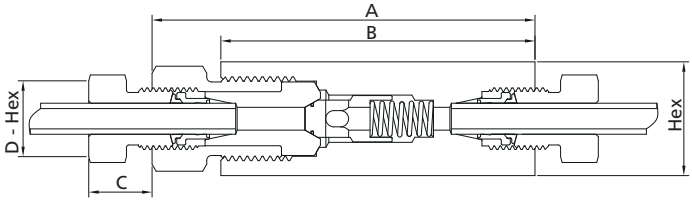

Ordering Number	Connection	Orifice in. (mm)	Cv	Dimensions, in. (mm)					Working Pressure psig (bar)
				A	B	C	D - Hex	Hex	
15CSS-DFF4	DFF4	0.188 (4.78)	0.63	3.35 (85)	2.72 (69.2)	0.52 (13.3)	0.63 (16.0)	0.81 (20.6)	15,000 (1034)
15CSS-DFF6	DFF6	0.250 (6.35)	1.70	3.72 (94.6)	3.13 (79.6)	0.53 (13.5)	0.75 (19.1)	1.00 (25.4)	15,000 (1034)
15CSS-DFF8	DFF8	0.36 (9.12)	2.30	4.41 (112.0)	3.68 (93.5)	0.60 (15.3)	0.93 (23.6)	1.38 (35.1)	15,000 (1034)

Note: Dimensions are for reference only and are subject to change. For dimensions not shown above, please contact FITOK Group or our authorized distributors.

Pipe O-Ring Check Valves

Features

◎ Cracking pressure: 14 psig~26 psig (0.97 bar~1.79 bar)
◎ Fluorocarbon FKM O-ring for operation from 0°F to 400°F (-17.8°C to 204°C); other materials of O-rings available
◎ Provide unidirectional flow and tight shut-off for liquids and gases with high reliability. When differential drops below cracking pressure, valve shuts off (not for use as relief valve)
◎ Resilient O-ring seat design ensures noise-free closing and reliable reverse flow prevention

Standard Materials of Construction

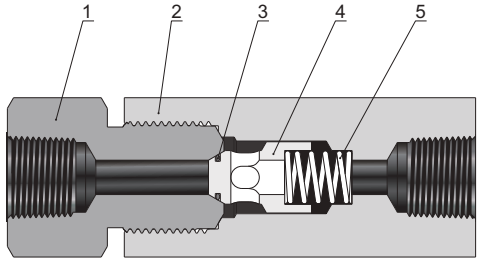

Item	Component	Material Grade
1	*Cover Gland*	*316 SS*
2	*Valve Body*	*316 SS*
3	*O-Ring*	*Fluorocarbon FKM*
4	*Poppet*	*316 SS*
5	*Spring*	*300 Series Stainless Steel*
	Lubricant	Molybdenum Disulfide/Fluorinated-Based

Wetted components listed in italics.

Ordering Information and Dimensions

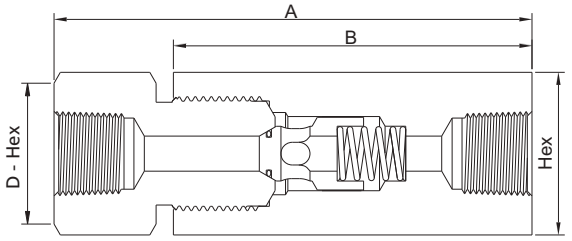

Ordering Number	Connection	Orifice in. (mm)	Cv	Dimensions, in. (mm)				Working Pressure psig (bar)
				A	B	D - Hex	Hex	
15CSS-FNS4	FNS4	0.12 (3.05)	0.28	3.30 (83.8)	2.38 (60.3)	0.94 (23.8)	0.94 (23.8)	15,000 (1034)
15CSS-FNS6	FNS6	0.22 (5.59)	0.84	3.95 (100.3)	2.88 (73.2)	1.13 (28.6)	1.13 (28.6)	15,000 (1034)
15CSS-FNS8	FNS8	0.36 (9.12)	2.30	5.07 (128.9)	3.88 (98.6)	1.38 (34.9)	1.38 (34.9)	15,000 (1034)

Note: Dimensions are for reference only and are subject to change. For dimensions not shown above, please contact FITOK Group or our authorized distributors.

15CO Series: 15,000 psig (1034 bar)

Ball Check Valves

Features

- Working temperature range: -110°F to 800°F (-79°C to 427°C)
- Tubing sizes available in 1/4", 3/8" and 1/2"
- Prevent reverse flow where leak-tight shut-off is not mandatory (not for use as relief valve)
- An integral design of the ball and poppet to assure positive, in-line seating without "chatter". Poppet designed essentially for axial flow with minimum pressure drop
- Optional materials of cover and ball poppet for longer life

Standard Materials of Construction

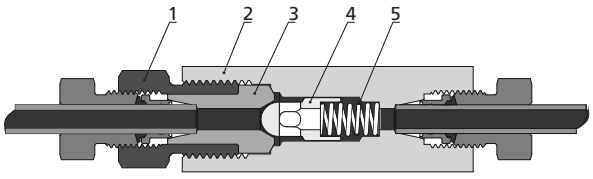

Item	Component	Material Grade
1	Cover Gland	316 SS
2	*Valve Body*	*316 SS*
3	*Cover*	*316 SS*
4	*Ball Poppet*	*S17400 SS*
5	*Spring*	*300 Series Stainless Steel*
	Lubricant	Molybdenum Disulfide/Fluorinated-Based

Wetted components listed in italics.

Ordering Information and Dimensions

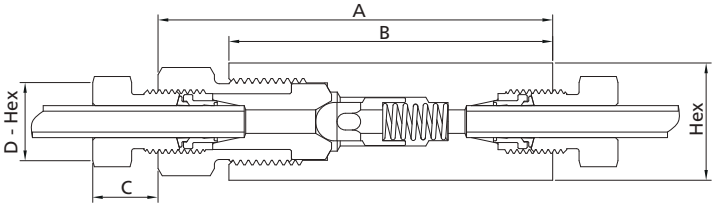

Ordering Number	Connection	Orifice in. (mm)	Cv	Dimensions, in. (mm)					Working Pressure psig (bar)
				A	B	C	D - Hex	Hex	
15COSS-DFF4	DFF4	0.188 (4.78)	0.63	3.35 (85)	2.72 (69.2)	0.52 (13.3)	0.63 (16.0)	0.81 (20.6)	15,000 (1034)
15COSS-DFF6	DFF6	0.250 (6.35)	1.70	3.72 (94.6)	3.13 (79.6)	0.53 (13.5)	0.75 (19.1)	1.00 (25.4)	15,000 (1034)
15COSS-DFF8	DFF8	0.36 (9.12)	2.30	4.41 (112.0)	3.68 (93.5)	0.60 (15.3)	0.93 (23.6)	1.38 (35.1)	15,000 (1034)

Note: Dimensions are for reference only and are subject to change. For dimensions not shown above, please contact FITOK Group or our authorized distributors.

Pipe Ball Check Valves

Features

◎ Working temperature range: -110°F to 400°F (-79°C to 204°C)
◎ Prevent reverse flow where leak-tight shut-off is not mandatory (not for use as relief valve)
◎ An integral design of the ball and poppet to assure positive, in-line seating without "chatter". Poppet is designed essentially for axial flow with minimum pressure drop
◎ Optional materials of cover gland and ball poppet for longer life

Standard Materials of Construction

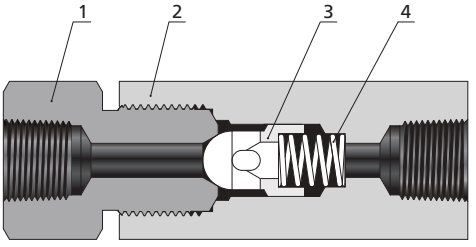

Item	Component	Material Grade
1	*Cover Gland*	*316 SS*
2	*Valve Body*	*316 SS*
3	*Ball Poppet*	*S17400 SS*
4	*Spring*	*300 Series Stainless Steel*
	Lubricant	Molybdenum Disulfide/Fluorinated-Based

Wetted components listed in italics.

Ordering Information and Dimensions

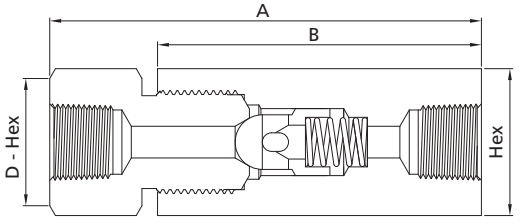

Ordering Number	Connection	Orifice in. (mm)	Cv	Dimensions, in. (mm)				Working Pressure psig (bar)
				A	B	D - Hex	Hex	
15COSS-FNS4	FNS4	0.12 (3.05)	0.28	3.30 (83.8)	2.38 (60.3)	0.94 (23.8)	0.94 (23.8)	15,000 (1034)
15COSS-FNS6	FNS6	0.22 (5.59)	0.84	3.95 (100.3)	2.88 (73.2)	1.13 (28.6)	1.13 (28.6)	15,000 (1034)
15COSS-FNS8	FNS8	0.36 (9.12)	2.30	5.07 (128.9)	3.88 (98.6)	1.38 (34.9)	1.38 (34.9)	15,000 (1034)

Note: Dimensions are for reference only and are subject to change. For dimensions not shown above, please contact FITOK Group or our authorized distributors.

20C Series: 20,000 psig (1379 bar)

O-Ring Check Valves

Features

- ◎ Cracking pressure: 14 psig~26 psig (0.97 bar~1.79 bar)
- ◎ Fluorocarbon FKM O-ring for operation from 0°F to 400°F (-17.8°C to 204°C); other materials of O-rings available
- ◎ Tubing sizes available from 1/4" to 1"
- ◎ Provide unidirectional flow and tight shut-off for liquids and gases with high reliability. When differential drops below cracking pressure, valve shuts off (not for use as relief valve)
- ◎ Resilient O-ring seat design ensures noise-free closing and reliable reverse flow prevention

Standard Materials of Construction

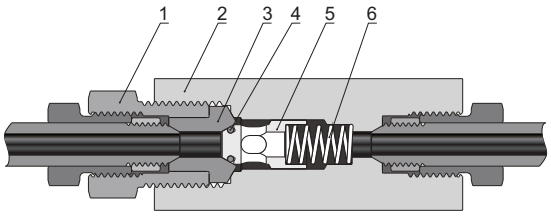

Item	Component	Material Grade
1	Cover Gland	316 SS
2	*Valve Body*	*316 SS*
3	*Cover*	*316 SS*
4	*O-Ring*	*Fluorocarbon FKM*
5	*Poppet*	*316 SS*
6	*Spring*	*300 Series Stainless Steel*
	Lubricant	Molybdenum Disulfide/Fluorinated-Based

Wetted components listed in italics.

Ordering Information and Dimensions

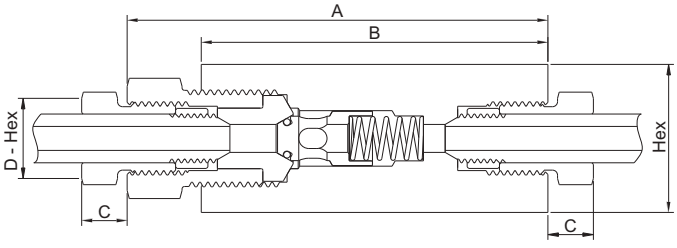

Ordering Number	Connection	Orifice in. (mm)	Cv	Dimensions, in. (mm)					Working Pressure psig (bar)
				A	B	C	D - Hex	Hex	
20CSS-MF4	MF4	0.125 (3.18)	0.28	2.94 (74.7)	2.50 (63.5)	0.38 (9.7)	0.50 (12.7)	0.81 (20.6)	20,000 (1379)
20CSS-MF6	MF6	0.218 (5.54)	0.84	3.12 (79.3)	2.62 (66.6)	0.44 (11.2)	0.62 (15.8)	1.00 (25.4)	20,000 (1379)
20CSS-MF9	MF9	0.359 (9.12)	2.30	4.18 (106.2)	3.50 (88.9)	0.55 (14.0)	0.94 (23.9)	1.38 (35.1)	20,000 (1379)
20CSS-MF12	MF12	0.516 (13.11)	4.70	5.50 (139.7)	4.75 (120.7)	0.60 (15.2)	1.19 (30.2)	1.75 (44.5)	20,000 (1379)
20CSS-MF16	MF16	0.688 (17.48)	7.40	6.91 (175.6)	5.75 (146.1)	0.74 (18.8)	1.38 (35.1)	2.12 (53.9)	20,000 (1379)

Note: Dimensions are for reference only and are subject to change. For dimensions not shown above, please contact FITOK Group or our authorized distributors.

20CO Series: 20,000 psig (1379 bar)

Ball Check Valves

Features

- Working temperature range: -110°F to 1200°F (-79°C to 649°C)
- Tubing sizes available from 1/4" to 1"
- Prevent reverse flow where leak-tight shut-off is not mandatory (not for use as relief valve)
- An integral design of the ball and poppet to assure positive, in-line seating without "chatter". Poppet is designed essentially for axial flow with minimum pressure drop
- Optional materials of cover and ball poppet for longer life

Standard Materials of Construction

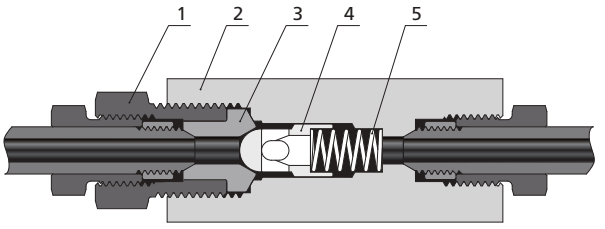

Item	Component	Material Grade
1	Cover Gland	316 SS
2	*Valve Body*	*316 SS*
3	*Cover*	*316 SS*
4	*Ball Poppet*	*S17400 SS*
5	*Spring*	*300 Series Stainless Steel*
	Lubricant	Molybdenum Disulfide/Fluorinated-Based

Wetted components listed in italics.

Ordering Information and Dimensions

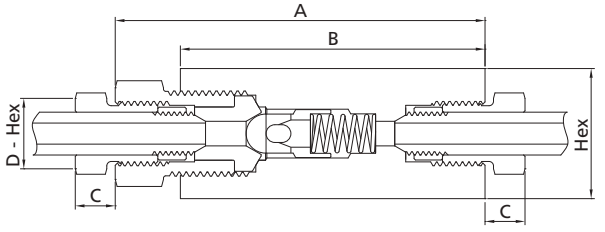

Ordering Number	Connection	Orifice in. (mm)	Cv	Dimensions, in. (mm)					Working Pressure psig (bar)
				A	B	C	D - Hex	Hex	
20COSS-MF4	MF4	0.125 (3.18)	0.28	2.94 (74.7)	2.50 (63.5)	0.38 (9.7)	0.50 (12.7)	0.81 (20.6)	20,000 (1379)
20COSS-MF6	MF6	0.218 (5.54)	0.84	3.12 (79.3)	2.62 (66.6)	0.44 (11.2)	0.62 (15.8)	1.00 (25.4)	20,000 (1379)
20COSS-MF9	MF9	0.359 (9.12)	2.30	4.18 (106.2)	3.50 (88.9)	0.55 (14.0)	0.94 (23.9)	1.38 (35.1)	20,000 (1379)
20COSS-MF12	MF12	0.516 (13.11)	4.70	5.50 (139.7)	4.75 (120.7)	0.60 (15.2)	1.19 (30.2)	1.75 (44.5)	20,000 (1379)
20COSS-MF16	MF16	0.688 (17.48)	7.40	6.91 (175.6)	5.75 (146.1)	0.74 (18.8)	1.38 (35.1)	2.12 (53.9)	20,000 (1379)

Note: Dimensions are for reference only and are subject to change. For dimensions not shown above, please contact FITOK Group or our authorized distributors.

60C Series: 60,000 psig (4137 bar)

O-Ring Check Valves

Features

- ◎ Cracking pressure: 14 psig~26 psig (0.97 bar~1.79 bar)
- ◎ Fluorocarbon FKM O-ring for operation from 0°F to 400°F (-17.8°C to 204°C); other materials of O-rings available
- ◎ Tubing sizes available from 1/4" to 9/16"
- ◎ Provide unidirectional flow and tight shut-off for liquids and gases with high reliability. When differential drops below cracking pressure, valve shuts off (not for use as relief valve)
- ◎ Resilient O-ring seat design ensures noise-free closing and reliable reverse flow prevention

Standard Materials of Construction

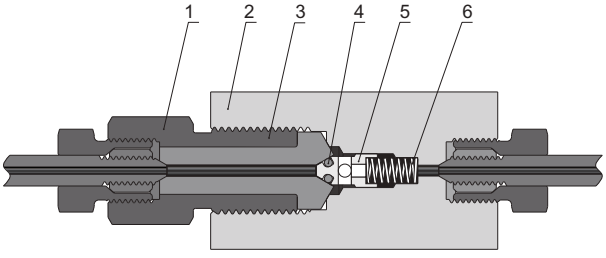

Item	Component	Material Grade
1	Cover Gland	316 SS
2	*Valve Body*	*316 SS*
3	*Cover*	*316 SS*
4	*O-Ring*	*Fluorocarbon FKM*
5	*Poppet*	*316 SS*
6	*Spring*	*300 Series Stainless Steel*
	Lubricant	Molybdenum Disulfide/Fluorinated-Based

Wetted components listed in italics.

Ordering Information and Dimensions

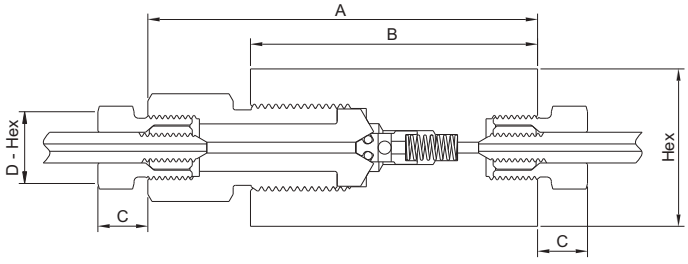

Ordering Number	Connection	Orifice in. (mm)	Cv	Dimensions, in. (mm)					Working Pressure psig (bar)
				A	B	C	D - Hex	Hex	
60CSS-HF4	HF4	0.094 (2.39)	0.15	3.38 (85.9)	2.50 (63.5)	0.47 (11.9)	0.63 (16.0)	1.18 (30.0)	60,000 (4137)
60CSS-HF6	HF6	0.125 (3.18)	0.28	3.86 (98.1)	2.80 (71.1)	0.61 (15.5)	0.81 (20.6)	1.18 (30.0)	60,000 (4137)
60CSS-HF9	HF9	0.187 (4.75)	0.63	4.62 (117.4)	3.38 (85.9)	0.95 (24.1)	1.12 (28.5)	1.50 (38.1)	60,000 (4137)

Note: Dimensions are for reference only and are subject to change. For dimensions not shown above, please contact FITOK Group or our authorized distributors.

60CO Series: 60,000 psig (4137 bar)

Ball Check Valves

Features

- Working temperature range: -110°F to 1200°F (-79°C to 649°C)
- Tubing sizes available from 1/4" to 9/16"
- Prevent reverse flow where leak-tight shut-off is not mandatory (not for use as relief valve)
- An integral design of the ball and poppet to assure positive, in-line seating without "chatter". Poppet is designed essentially for axial flow with minimum pressure drop
- Optional materials of cover and ball poppet for longer life

Standard Materials of Construction

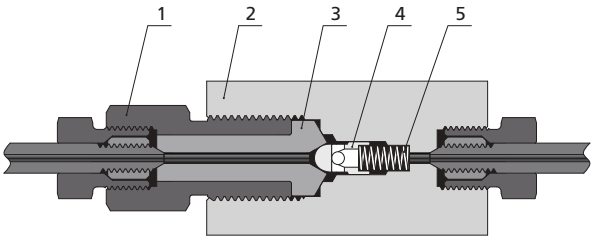

Item	Component	Material Grade
1	Cover Gland	316 SS
2	*Valve Body*	*316 SS*
3	*Cover*	*316 SS*
4	*Ball Poppet*	*S17400 SS*
5	*Spring*	*300 Series Stainless Steel*
	Lubricant	Molybdenum Disulfide/Fluorinated-Based

Wetted components listed in italics.

Ordering Information and Dimensions

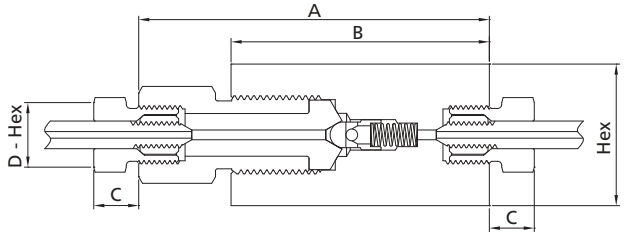

Ordering Number	Connection	Orifice in. (mm)	Cv	Dimensions, in. (mm)					Working Pressure psig (bar)
				A	B	C	D - Hex	Hex	
60COSS-HF4	HF4	0.094 (2.39)	0.15	3.38 (85.9)	2.50 (63.5)	0.47 (11.9)	0.63 (16.0)	1.18 (30.0)	60,000 (4137)
60COSS-HF6	HF6	0.125 (3.18)	0.28	3.86 (98.1)	2.80 (71.1)	0.61 (15.5)	0.81 (20.6)	1.18 (30.0)	60,000 (4137)
60COSS-HF9	HF9	0.187 (4.75)	0.63	4.62 (117.4)	3.38 (85.9)	0.95 (24.1)	1.19 (30.16)	1.50 (38.1)	60,000 (4137)

Note: Dimensions are for reference only and are subject to change. For dimensions not shown above, please contact FITOK Group or our authorized distributors.

Ordering Number Description

15CSS – DFF4 - B

Series	Body Material	Connection Type	Connection Size	O-Ring Material
10C	SS 316 SS	For 10C/10CO Series	4 1/4"	Fluorocarbon FKM
10CO		FNS Female NPT	6 3/8"	B NBR
15C		For 15C/15CO Series	8 1/2"	
15CO		DFF Female 20D Series	9 9/16"	
20C		FNS Female NPT	12 3/4"	
20CO		For 20C/20CO Series	16 1"	
60C		MF Female Medium Pressure		
60CO		For 60C/60CO Series		
		HF Female High Pressure		

Designator	O-Ring Material	Working Temperature Range, °F (°C)
	Fluorocarbon FKM	0 to 400 (-17.8 to 204)
B	NBR	-10 to 250 (-23 to 121)

Notes: 1. For more details regarding 20D Series and Medium/High Pressure connections, please see **Connection Information** on A-02.
2. "Ordering Number Description" is a reference to understand the combination rules of FITOK product part number. Not all combinations are available.

Metering Valves

15M Series: 15,000 psig (1034 bar)
30M Series: 30,000 psig (2068 bar)
60M Series: 60,000 psig (4137 bar)



Contents

Features E-66

Technical Data E-66

Flow Data at 100°F (38°C) E-66

Pressure vs. Temperature Curve E-66

Standard Materials of Construction E-67

Ordering Information and Dimensions E-68

Ordering Number Description E-68

Features

◎ Precisely tapered valve stem accurately controls flow for gases and liquids
◎ The design of Barrel and Thimble micrometer permits repeatable settings
Each division of barrel equals to 0.025"
Thimble is divided into 25 divisions, each division of thimble equals to 0.001" stem travel
One revolution equals to valve stem 0.025" travel
◎ Valve body made of high tensile 316 stainless steel for maximum wear and corrosion resistance
◎ Packing located under stem threads
◎ Reliable locking device for packing gland
◎ Not intended as shut-off valves. Install a correlated shutoff valve when shut-off is required
◎ Minimum flow rate set at"0" position, and operation below "0" position not allowed

Technical Data

Series	Tube O.D. in.	Connection	Orifice in. (mm)	Cv	Working Pressure psig (bar)
15M	1/8	DFF2	0.062 (1.57)	0.04	15,000 (1034)
15M	1/4	DFF4	0.062 (1.57)	0.04	15,000 (1034)
30M	1/4	HF4	0.062 (1.57)	0.04	30,000 (2068)
60M	1/4	HF4	0.062 (1.57)	0.04	60,000 (4137)
60M	3/8	HF6	0.062 (1.57)	0.04	60,000 (4137)

Packing Options:
Nylon is the standard packing material for 60M series, PTFE for other series. RPTFE is available for all series.
Nylon: 40°F~230°F (4.4°C~110°C).
PTFE: -100°F~450°F (-73°C~232°C).
RPTFE glass: -100°F~600°F (-73°C~316°C).
Graphite: 0°F~800°F (-17.8°C~427°C).

Flow Data at 100°F (38°C)

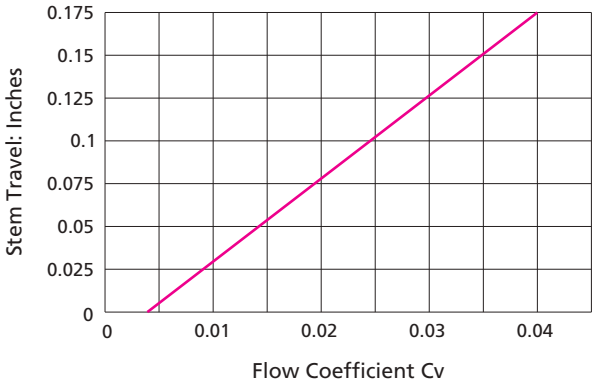

Pressure vs. Temperature Curve

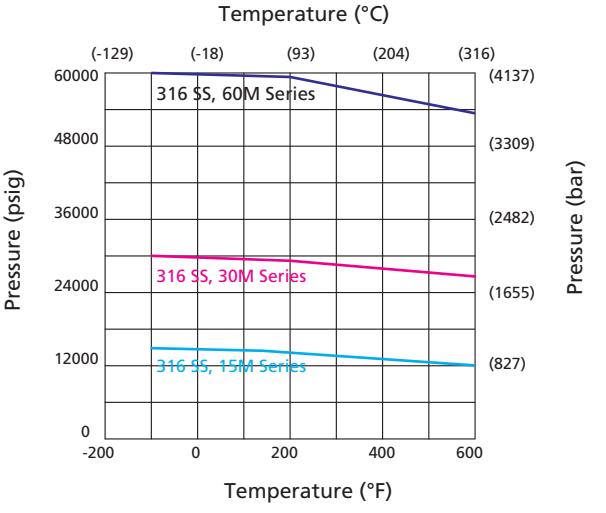

Standard Materials of Construction

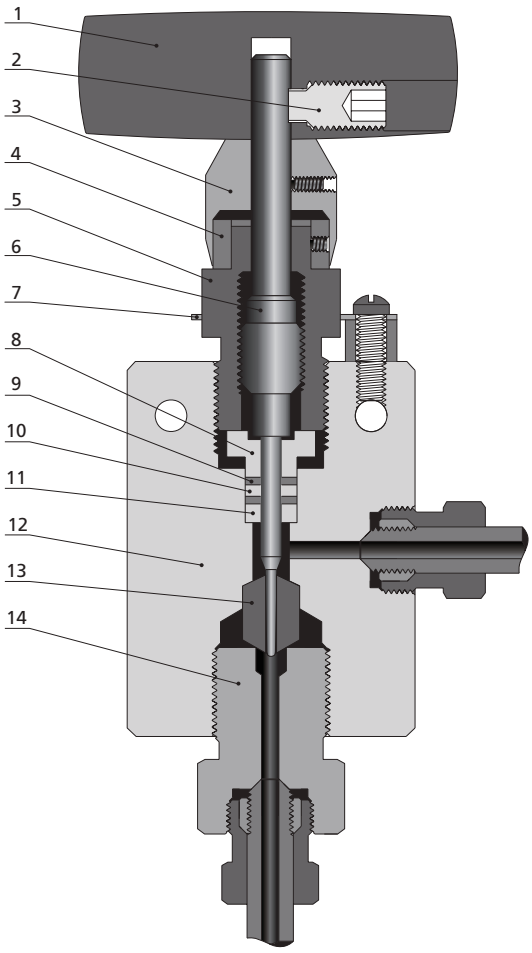

Item	Component	Material Grade
1	Handle	Stainless Steel
2	Handle Screw	Stainless Steel
3	Thimble	304 SS
4	Barrel	304 SS
5	Packing Gland	C63000
6	*Stem*	*316 (For 15M Series), S17400 (For 30M, 60M Series)*
7	Locking Plate	304 SS
8	Packing Ring	*316 (For 15M, 30M Series), S17400 (For 60M Series)*
9	*Packing*	*PTFE/RPTFE/Nylon/Graphite*
10	*Retaining Ring*	*PEEK (60M Series Only)*
11	*Packing Washer*	*316 (For 15M Series), S17400 (For 30M, 60M Series)*
12	*Body*	*316 SS*
13	*Seat*	*316 SS*
14	*Seat Gland*	*316 SS*
	Lubricant	Molybdenum Disulfide/Fluorinated-Based

Wetted components listed in italics.

Ordering Information and Dimensions

15M Series

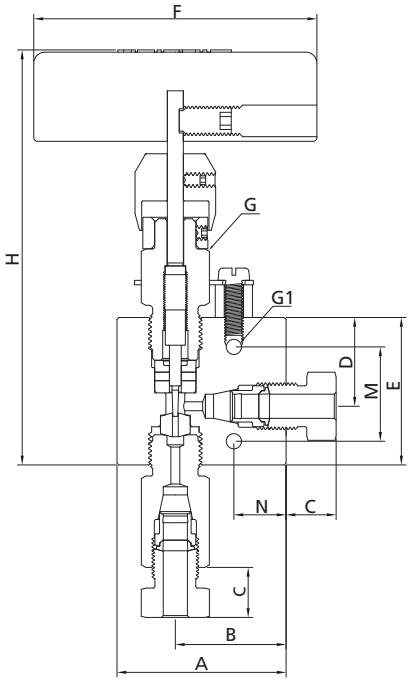

30M/60M Series

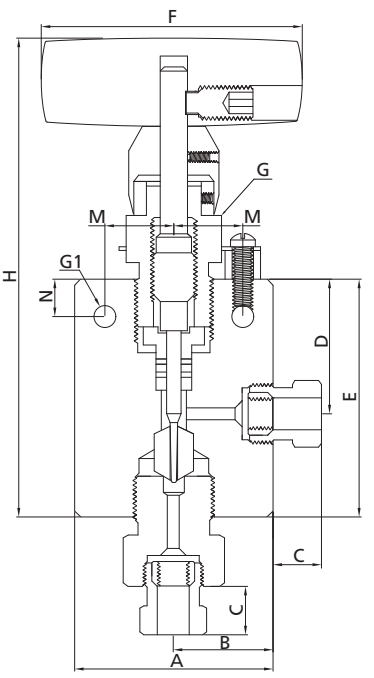

Ordering Number	Connection	Orifice in. (mm)	Dimensions, in. (mm)											
			A	B	C	D	E	F	G	G1	H	M	N	Thickness
15MSS-DFF2	DFF2	0.062 (1.57)	1.79 (45.5)	1.17 (29.8)	0.44 (11.2)	0.94 (23.8)	1.56 (39.6)	3.00 (76.2)	0.87 (22.1)	0.16 (4.1)	4.40 (111.7)	1.00 (25.4)	0.55 (14.1)	0.75 (19.1)
15MSS-DFF4	DFF4	0.062 (1.57)	1.79 (45.5)	1.17 (29.8)	0.53 (13.5)	0.94 (23.8)	1.56 (39.6)	3.00 (76.2)	0.87 (22.1)	0.16 (4.1)	4.40 (111.7)	1.00 (25.4)	0.55 (14.1)	0.75 (19.1)
30MSS-HF4	HF4	0.062 (1.57)	2.00 (50.8)	1.00 (25.4)	0.47 (11.9)	1.12 (28.5)	2.00 (50.8)	3.00 (76.2)	0.97 (24.6)	0.22 (5.6)	4.90 (124.5)	0.69 (17.3)	0.50 (12.7)	1.00 (25.4)
60MSS-HF4	HF4	0.062 (1.57)	2.00 (50.8)	1.00 (25.4)	0.47 (11.9)	1.31 (33.3)	2.63 (66.8)	3.00 (76.2)	0.97 (24.6)	0.22 (5.6)	5.54 (140.7)	0.69 (17.3)	0.50 (12.7)	1.00 (25.4)
60MSS-HF6	HF6	0.062 (1.57)	2.00 (50.8)	1.00 (25.4)	0.61 (15.6)	1.31 (33.3)	2.63 (66.8)	3.00 (76.2)	0.97 (24.6)	0.22 (5.6)	5.54 (140.7)	0.69 (17.3)	0.50 (12.7)	1.00 (25.4)

Notes: 1. G is the drill dimension of packing bolt mounting hole.
2. G1 is the dimension of bracket mounting hole.
3. Panel mounting drill size: 0.25" all valves.
4. H is the dimension when stem is in fully open position.
5. All dimensions are for reference only and are subject to change. For dimensions not shown above, please contact FITOK Group or our authorized distributors.

Ordering Number Description

30MSS – HF4 – TG

Series	Body Material	Connection	Packing Material
15M	SS 316 SS	DFF2 1/8" Female 20D Series	PTFE (15M and 30M Series Only), Nylon (60M Series Only)
30M		DFF4 1/4" Female 20D Series	TG RPTFE Glass
60M		HF4 1/4" Female High Pressure	G Graphite (15M Only)
		HF6 3/8" Female High Pressure	

Note: "Ordering Number Description" is a reference to understand the combination rules of FITOK product part number. Not all combinations are available.

Relief Valves

HSR Series: 20,000 psig (1379 bar)
HMR Series: 60,000 psig (4137 bar)
HAR Series: 20,000 psig (1379 bar)



Contents

HSR Series

20,000 psig (1379 bar) E-71

HMR Series

60,000 psig (4137 bar) E-74

HAR Series

20,000 psig (1379 bar) E-77

Ordering Number Description

E-80

HSR Series: 20,000 psig (1379 bar)

Features

- Set pressure: 1,500 to 20,000 psig (103 to 1379 bar)
- Working temperature range: 32°F to 400°F (0°C to 204°C)
- Liquid or gas service
- Soft seat design to provide bubble tight shut-off of gas
- Factory-set, test, locked, and tagged with the set pressure
- Lock wire the cap and body together to maintain relief setting
- Mountable in any direction

Ordering Information and Technical Data

Ordering Number	Inlet		Outlet Connection	Orifice in. (mm)	Cv	Minimum Set Pressure psig (bar)	Maximum Set Pressure psig (bar)	Maximum Back Pressure psig (bar)
	Tube O.D. in.	Connection						
HSRSS-MF9-FNS12-1	9/16	MF9	FNS12	0.312 (7.92)	1.2	1,500 (103)	5,000 (345)	500 (34.5)
HSRSS-MF9-FNS12-2	9/16	MF9	FNS12	0.25 (6.35)	0.8	5,000 (345)	10,000 (690)	500 (34.5)
HSRSS-MF9-FNS12-3	9/16	MF9	FNS12	0.156 (3.96)	0.3	10,000 (690)	20,000 (1379)	500 (34.5)

Notes: 1. Please specify the required set pressure when ordering.
2. Maximum system operating pressure should not exceed 90% of the set pressure.
3. For valves not actuated for a period of time, initial relief pressure may be higher than the set pressure.

Standard Materials of Construction

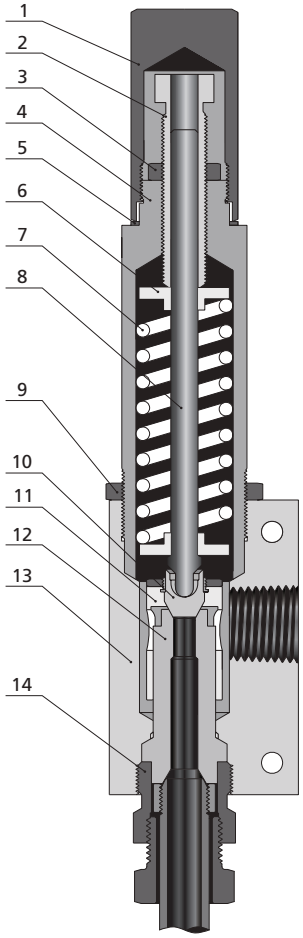

Item	Component	Material Grade
1	*Cap*	*316 SS*
2	*Adjusting Bolt*	*316 SS*
3	*Lock Nut*	*316 SS*
4	*Spring Cylinder*	*316 SS*
5	*Gasket*	*316L SS*
6	*Spring Washer*	*316 SS*
7	*Spring*	*S17700*
8	*Spindle*	*316 SS*
9	Lock Nut	316 SS
10	*Plug*	*PEEK*
11	*Plug Guide*	*316 SS*
12	*Seat*	*316 SS*
13	*Valve Body*	*316 SS*
14	Seat Gland	316 SS
	Lubricant	Molybdenum Disulfide/Fluorinated-Based

Wetted components listed in italics.

Dimensions

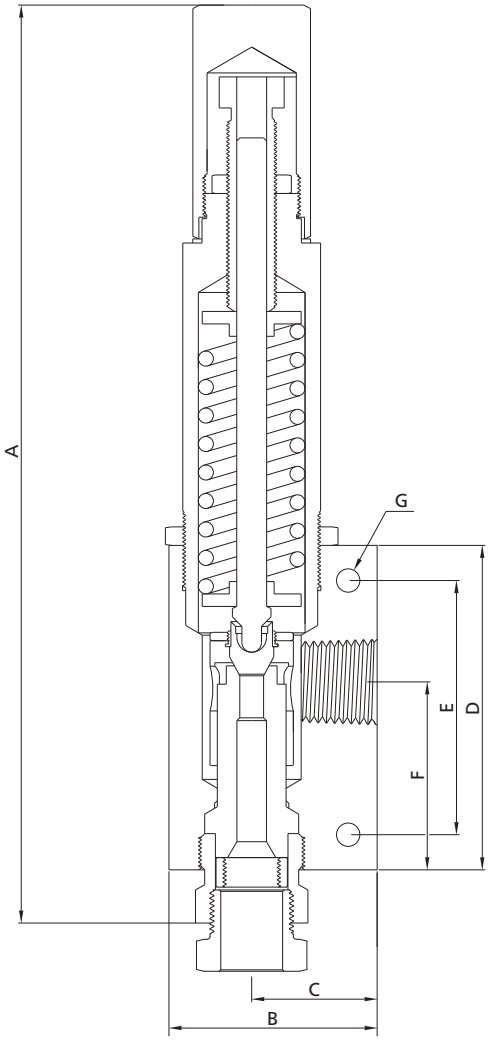

Dimensions, in.(mm)						
A	B	C	D	E	F	G
9.46 (240.4)	2.00 (50.8)	1.19 (30.2)	3.25 (82.6)	2.25 (57.1)	1.94 (49.3)	0.28 (7.2)

Notes: 1. G is the dimension of mounting holes.
2. All dimensions are for reference only and are subject to change. For dimensions not shown above, please contact FITOK Group or our authorized distributors.

HMR Series: 60,000 psig (4137 bar)

Features

- Set pressure: 3,000 to 60,000 psig (207 to 4137 bar)
- Working temperature range: -110°F to 400°F (-79°C to 204°C)
- Liquid or gas service
- Metal-to-metal seating to provide shut-off of liquids and gases under pressure to commercial tightness standards
- Factory-set, test, locked, and tagged with the set pressure
- Lock wire the cap and body together to maintain relief setting
- Mountable in any direction

Ordering Information and Technical Data

Ordering Number	Inlet		Outlet Connection	Orifice Size in. (mm)	Cv	Minimum Set Pressure psig (bar)	Maximum Set Pressure psig (bar)	Maximum Back Pressure psig (bar)
	Tube O.D. in.	Connection						
HMRSS-MF9-FNS12-1	9/16	MF9	FNS12	0.312 (7.92)	1.2	3,000 (207)	5,000 (345)	500 (34.5)
HMRSS-MF9-FNS12-2	9/16	MF9	FNS12	0.250 (6.35)	0.8	5,000 (345)	10,000 (690)	500 (34.5)
HMRSS-MF9-FNS12-3	9/16	MF9	FNS12	0.188 (4.78)	0.45	10,000 (690)	15,000 (1034)	500 (34.5)
HMRSS-MF9-FNS12-4	9/16	MF9	FNS12	0.156 (3.96)	0.3	15,000 (1034)	20,000 (1379)	500 (34.5)
HMRSS-HF6-FNS12-5	3/8	HF6	FNS12	0.125 (3.18)	0.2	20,000 (1379)	30,000 (2068)	500 (34.5)
HMRSS-HF6-FNS12-6	3/8	HF6	FNS12	0.093 (2.36)	0.1	25,000 (1724)	45,000 (3103)	500 (34.5)
HMRSS-HF6-FNS12-7	3/8	HF6	FNS12	0.078 (1.98)	0.07	30,000 (2068)	60,000 (4137)	500 (34.5)

Notes: 1. Please specify the required set pressure when ordering.
2. Maximum system operating pressure should not exceed 90% of the relief valve set pressure.
3. For valves not actuated for a period of time, initial relief pressure may be higher than the set pressure.

Standard Materials of Construction

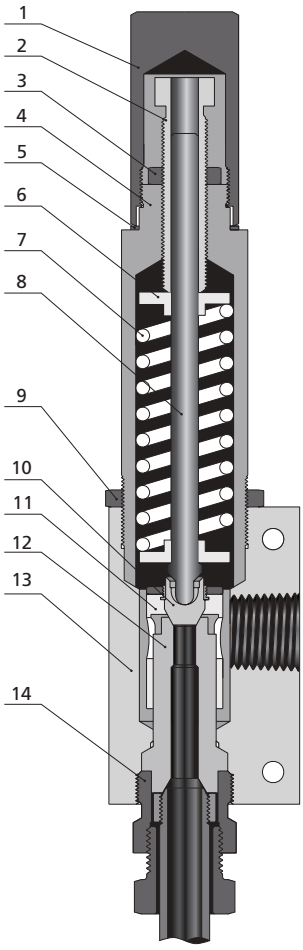

Item	Component	Material Grade
1	*Cap*	*316 SS*
2	*Adjusting Bolt*	*316 SS*
3	*Lock Nut*	*316 SS*
4	*Spring Cylinder*	*316 SS*
5	*Gasket*	*316L SS*
6	*Spring Washer*	*316 SS*
7	*Spring*	*S17700*
8	*Spindle*	*316 SS*
9	Lock Nut	316 SS
10	*Plug*	*S17400*
11	*Plug Guide*	*316 SS*
12	*Seat*	*S17400*
13	*Valve Body*	*316 SS*
14	Seat Gland	316 SS
	Lubricant	Molybdenum Disulfide/Fluorinated-Based

Wetted components listed in italics.

FITOK

Dimensions

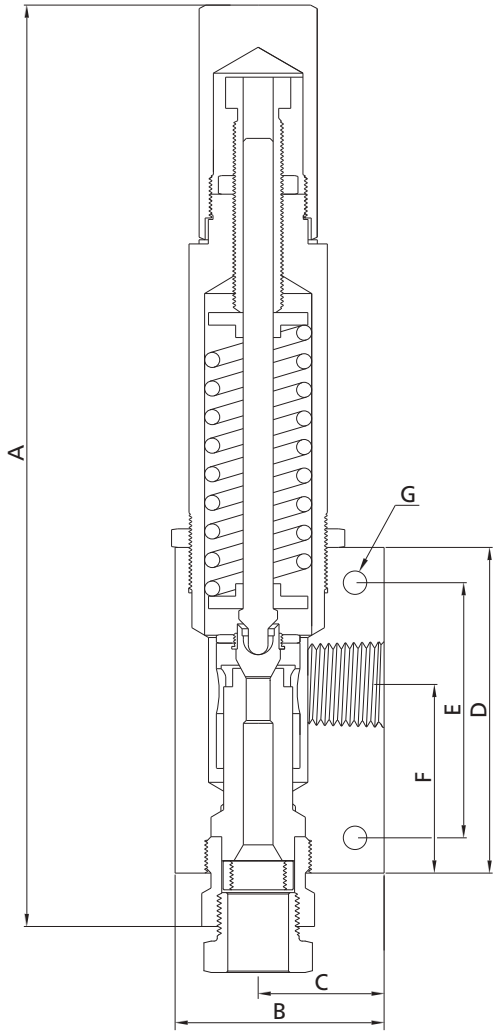

Dimensions, in.(mm)						
A	B	C	D	E	F	G
9.46 (240.4)	2.00 (50.8)	1.19 (30.2)	3.25 (82.6)	2.25 (57.1)	1.94 (49.3)	0.28 (7.2)

Notes: 1. G is the dimension of mounting holes.
2. All dimensions are for reference only and are subject to change. For dimensions not shown above, please contact FITOK Group or our authorized distributors.

HAR Series: 20,000 psig (1379 bar)

Features

- Set pressure: 3,000 to 20,000 psig (207 to 1379 bar)
- Working temperature range: 32°F to 400°F (0°C to 204°C)
- Field adjustable
- Liquid or gas service
- Soft seat design to provide bubble tight shut-off of gas
- Easily replaceable seat
- Mountable in any direction

Ordering Information and Technical Data

Ordering Number	Inlet		Outlet Connection	Orifice Size in. (mm)	Cv	Minimum Set Pressure psig (bar)	Maximum Set Pressure psig (bar)	Maximum Back Pressure psig (bar)
	Tube O.D. in.	Connection						
HARSS-MF9-FNS12-1	9/16	MF9	FNS12	0.197 (5.0)	0.5	3,000 (207)	10,000 (690)	500 (34.5)
HARSS-MF9-FNS12-2	9/16	MF9	FNS12	0.093 (2.36)	0.1	10,000 (690)	20,000 (1379)	500 (34.5)

Notes: 1. Maximum system operating pressure should not exceed 90% of the relief valve set pressure.
2. For valves not actuated for a period of time, initial relief pressure may be higher than the set pressure.

Standard Materials of Construction

Item	Component	Material Grade
1	Handle	Aluminum Alloy
2	Set Screw	316 SS
3	Lock Nut	316 SS
4	Bonnet	316 SS
5	Upper Stem	316 SS
6	Spring	S17700
7	Lock Nut	316 SS
8	Packing Gland	C63000
9	Washer	C63000
10	*Backing Ring*	*PEEK*
11	*Backing Ring*	*PTFE*
12	*O-Ring*	*Fluorocarbon FKM*
13	*Ring*	*PEEK*
14	*Lower Stem*	*316 SS*
15	*Plug*	*PEEK*
16	*Body*	*316 SS*
17	*Seat*	*316 SS*
	Lubricant	Molybdenum Disulfide/Fluorinated-Based

Wetted components listed in italics.

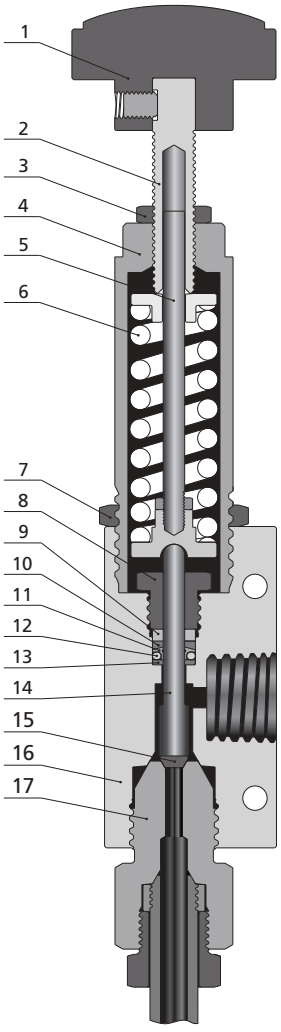

Dimensions

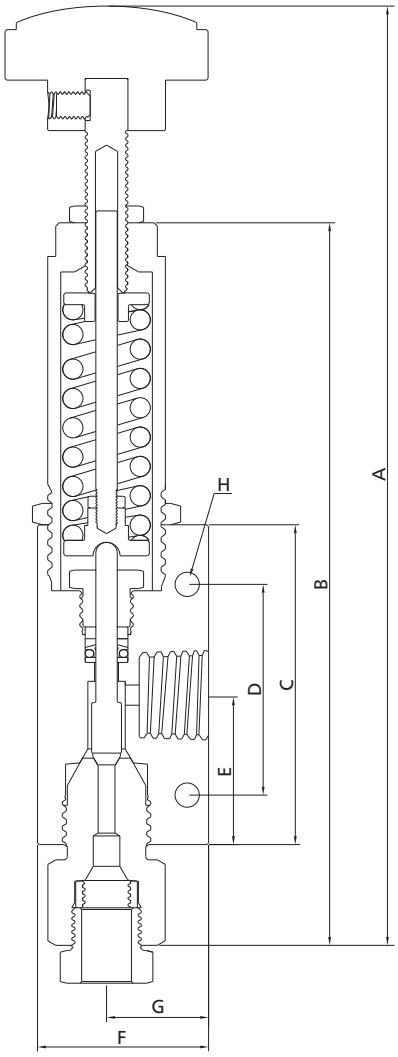

Dimensions, in.(mm)							
A	B	C	D	E	F	G	H
10.98 (278.8)	8.45 (214.6)	3.74 (95.0)	2.46 (62.6)	1.75 (44.4)	2.00 (50.8)	1.19 (30.3)	0.28 (7.2)

Notes: 1. H is the dimension of mounting holes.
2. All dimensions are for reference only and are subject to change. For dimensions not shown above, please contact the FITOK Group or our authorized distributors.

Ordering Number Description

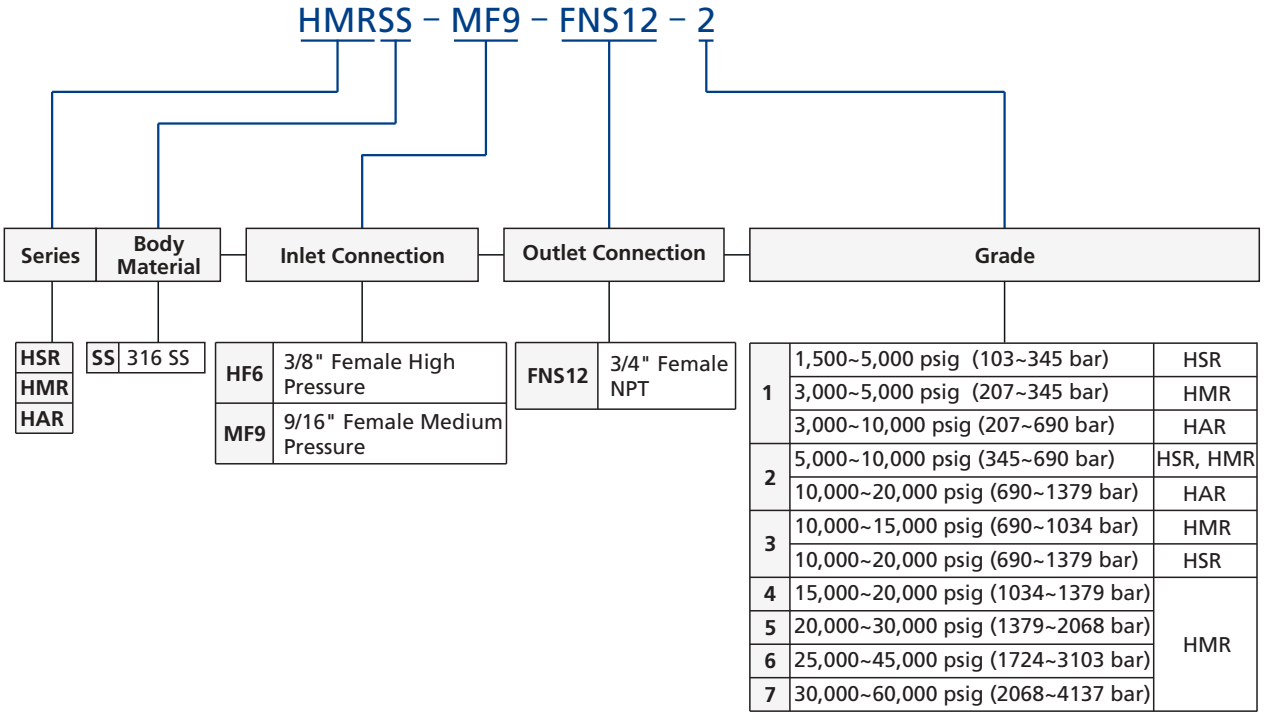

Notes: 1. For more details regarding Medium/High Pressure connections, please see **Connection Information** on A-02.
2. Valves are factory-set, test, locked, and tagged with the set pressure. Please specify the required set pressure when ordering.
3. "Ordering Number Description" is a reference to understand the combination rules of FITOK product part number. Not all combinations are available.

Bleed Valves and Block & Bleed Valves

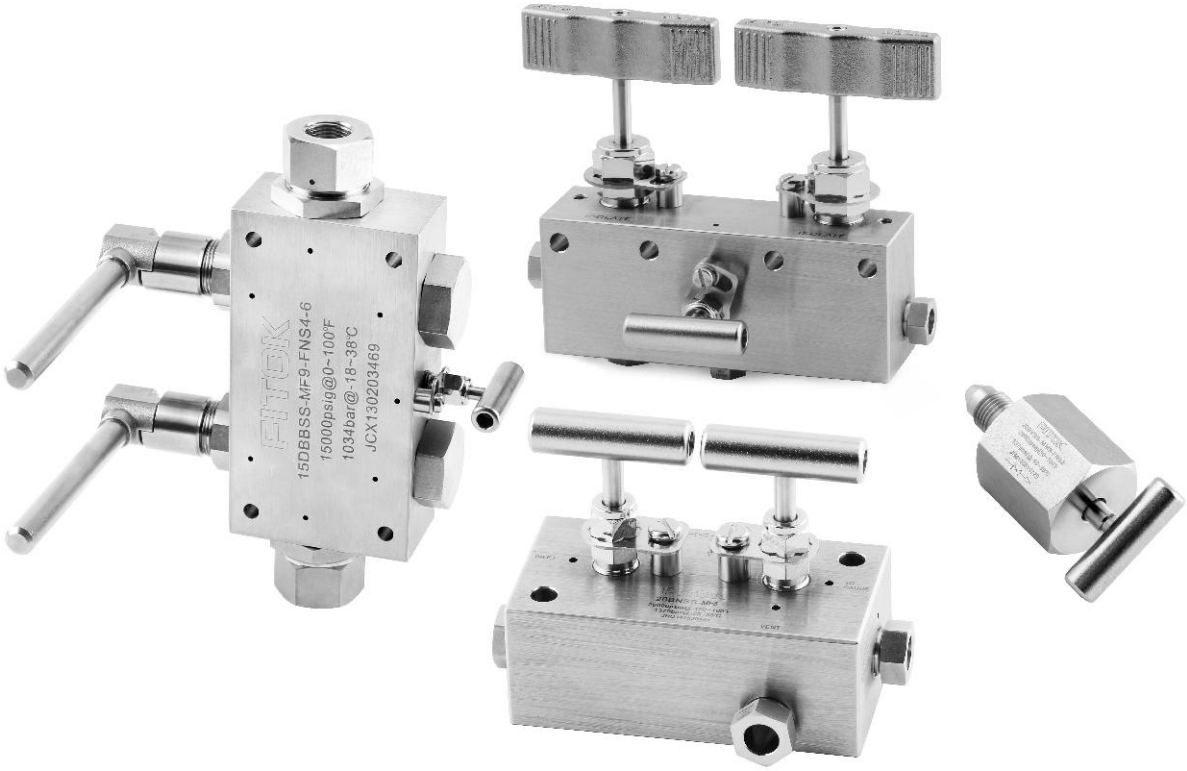

Contents

Bleed Valves

Working Pressure Up to 30,000 psig (2068 bar) E-83

Block & Bleed Needle Valves

Working Pressure Up to 20,000 psig (1379 bar) E-86

Double Block & Bleed Needle Valves

Working Pressure Up to 20,000 psig (1379 bar) E-90

Double Block & Bleed Ball Valves

Working Pressure Up to 15,000 psig (1034 bar) E-94

Bleed Valves

Working Pressure Up to 30,000 psig (2068 bar)

Features

- One piece hex construction compact design allows easy installation
- Fluorocarbon FKM O-ring for operation from 0°F to 400°F (-17.8°C to 204°C)
- 1/8" Female NPT outlet connection
- High tensile 316 stainless steel body material
- Easy to assemble and replace O-ring
- Positive locking screw design prevents accidental removal of the stem
- Tee handle for easy operation

Technical Data

Series	Inlet Connection	Orifice in. (mm)	Working Pressure psig (bar)
15BV	DFT6	0.094 (2.4)	15,000 (1034)
	DFT8	0.094 (2.4)	15,000 (1034)
	DFT9	0.094 (2.4)	15,000 (1034)
20BV	MM6	0.094 (2.4)	20,000 (1379)
	MM9	0.094 (2.4)	20,000 (1379)
	MCT6	0.094 (2.4)	20,000 (1379)
	MCT9	0.094 (2.4)	20,000 (1379)
30BV	HM6	0.094 (2.4)	30,000 (2068)
	HM9	0.094 (2.4)	30,000 (2068)
	HCT6	0.094 (2.4)	30,000 (2068)
	HCT9	0.094 (2.4)	30,000 (2068)

Notes: 1. Working pressure shown is in closed position.
2. Working pressure is 15,000 psig (1034 bar) bar in open position.
3. A variety of end connections available on request. For connections not shown above, please contact FITOK Group or our authorized distributors.

Standard Materials of Construction

Item	Component	Material Grade
1	Handle Screw	Stainless Steel
2	Handle	Stainless Steel
3	Locking Screw	Stainless Steel
4	*Body*	*316 SS*
5	*Stem*	*S17400*
6	O-*Ring*	*Fluorocarbon FKM*
	Lubricant	Molybdenum disulfide/Fluorinated-Based

Wetted components listed in italics.

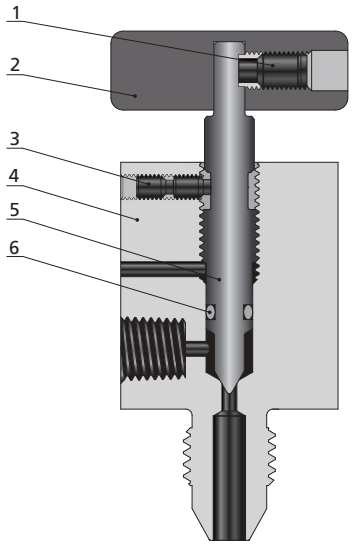

Ordering Information and Dimensions

Type 1

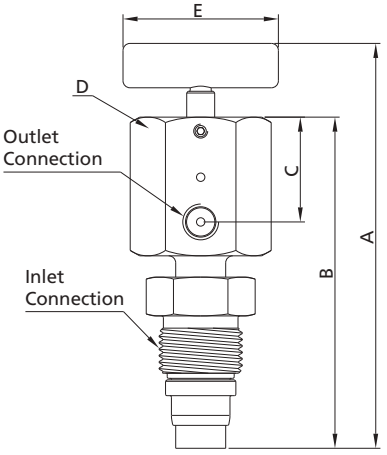

Type 2

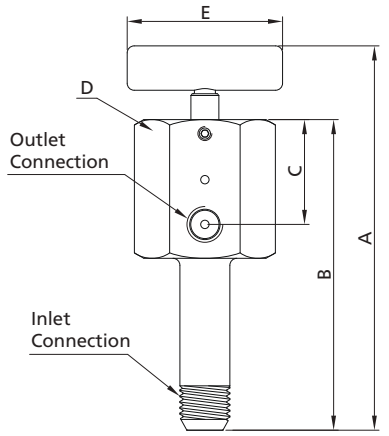

Type 3

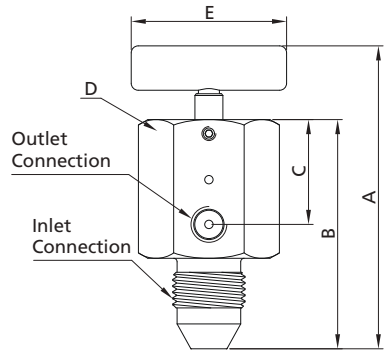

Type 1

Ordering Number	Inlet Connection	Outlet Connection	Orifice in. (mm)	Dimensions, in. (mm)				
				A	B	C	D	E
15BVSS-DFT6-FNS2	DFT6	FNS2	0.094 (2.4)	3.94 (100.1)	3.11 (78.9)	1.18 (30.0)	1.37 (34.9)	1.75 (44.5)
15BVSS-DFT8-FNS2	DFT8	FNS2	0.094 (2.4)	4.10 (104.1)	3.26 (82.9)	1.18 (30.0)	1.37 (34.9)	1.75 (44.5)
15BVSS-DFT9-FNS2	DFT9	FNS2	0.094 (2.4)	4.54 (115.4)	3.71 (94.2)	1.18 (30.0)	1.37 (34.9)	1.75 (44.5)

Type 2

Ordering Number	Inlet Connection	Outlet Connection	Orifice in. (mm)	Dimensions, in. (mm)				
				A	B	C	D	E
20BVSS-MCT6-FNS2	MCT6	FNS2	0.094 (2.4)	3.61 (91.7)	2.78 (70.5)	1.18 (30.0)	1.37 (34.9)	1.75 (44.5)
20BVSS-MCT9-FNS2	MCT9	FNS2	0.094 (2.4)	3.82 (97.0)	2.98 (75.8)	1.18 (30.0)	1.37 (34.9)	1.75 (44.5)
30BVSS-HCT6-FNS2	HCT6	FNS2	0.094 (2.4)	4.09 (103.9)	3.26 (82.7)	1.18 (30.0)	1.37 (34.9)	1.75 (44.5)
30BVSS-HCT9-FNS2	HCT9	FNS2	0.094 (2.4)	4.68 (118.9)	3.85 (97.7)	1.18 (30.0)	1.37 (34.9)	1.75 (44.5)

Type 3

Ordering Number	Inlet Connection	Outlet Connection	Orifice in. (mm)	Dimensions, in. (mm)				
				A	B	C	D	E
20BVSS-MM6-FNS2	MM6	FNS2	0.094 (2.4)	3.23 (82.0)	2.39 (60.8)	1.18 (30.0)	1.37 (34.9)	1.75 (44.5)
20BVSS-MM9-FNS2	MM9	FNS2	0.094 (2.4)	3.42 (86.8)	2.58 (65.6)	1.18 (30.0)	1.37 (34.9)	1.75 (44.5)
30BVSS-HM6-FNS2	HM6	FNS2	0.094 (2.4)	3.27 (83.1)	2.44 (61.9)	1.18 (30.0)	1.37 (34.9)	1.75 (44.5)
30BVSS-HM9-FNS2	HM9	FNS2	0.094 (2.4)	3.44 (87.4)	2.61 (66.2)	1.18 (30.0)	1.37 (34.9)	1.75 (44.5)

Notes: 1. D is the dimension of hex.
2. A is the dimension of stem in closed position.
3. All dimensions are for reference only and are subject to change. For dimensions not shown above, please contact FITOK Group or our authorized distributors.

Ordering Number Description

20BVSS – MCT9 – FNS2

Series	Body Material	Inlet Connection	Outlet Connection
15BV	SS 316 SS	DFT6 3/8" Tube Stub with Double Ferrules and Nut	FNS2 1/8" Female NPT
20BV		DFT8 1/2" Tube Stub with Double Ferrules and Nut	
30BV		DFT9 9/16" Tube Stub with Double Ferrules and Nut	
		MM6 3/8" Male Medium Pressure	
		MM9 9/16" Male Medium Pressure	
		MCT6 3/8" Medium Pressure Coned and Threaded Nipples	
		MCT9 9/16" Medium Pressure Coned and Threaded Nipples	
		HM6 3/8" Male High Pressure	
		HM9 9/16" Male High Pressure	
		HCT6 3/8" High Pressure Coned and Threaded Nipples	
		HCT9 9/16" High Pressure Coned and Threaded Nipples	

Notes: 1. For more details regarding Medium/High Pressure connections, please see **Connection Information** on A-02.
2. "Ordering Number Description" is a reference to understand the combination rules of FITOK product part number. Not all combinations are available.

Block & Bleed Needle Valves

Working Pressure Up to 20,000 psig (1379 bar)

Features

- ◎ Compact design offers advantages over configurations with multiple valves and fittings
- ◎ Minimal space needed for installation and operation
- ◎ Cost savings from fewer components required
- ◎ Reduced potential for leakage
- ◎ Metal-to-metal seating achieves ideal shutoff, longer stem/seat service lifetime for abrasive flow, excellent corrosion resistance and greater durability for repeated on/off cycles
- ◎ Non-rotating stem and bar stock body design
- ◎ Reliable packing gland locking device

Flow Data at 100°F (38°C)

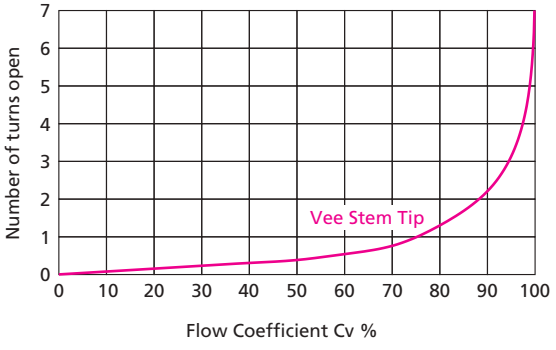

Pressure vs. Temperature Curve

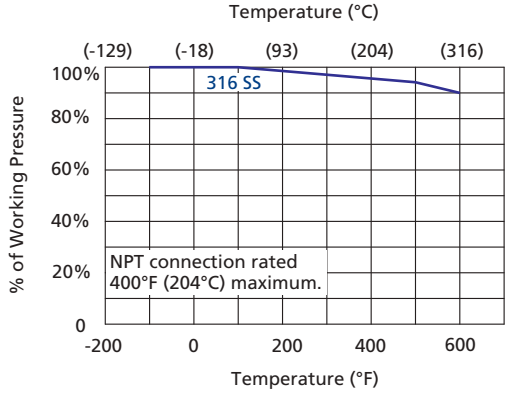

Technical Data

Series	Connection	Orifice in. (mm)	Cv	Working Pressure psig (bar)
15BN	FNS4	0.094 (2.4)	0.20	15,000 (1034)
	FNS6	0.094 (2.4)	0.20	15,000 (1034)
20BN	MF4	0.094 (2.4)	0.20	20,000 (1379)
	MF6	0.094 (2.4)	0.20	20,000 (1379)

Notes: 1. Packing Options
PTFE is the standard packing material, RPTFE glass also available.
PTFE: -100°F~450°F (-73°C~232°C).
RPTFE glass:-100°F~600°F (-73°C~316°C).
2. A variety of end connections are available on request . For connections not shown above, please contact FITOK Group or our authorized distributors.

Standard Materials of Construction

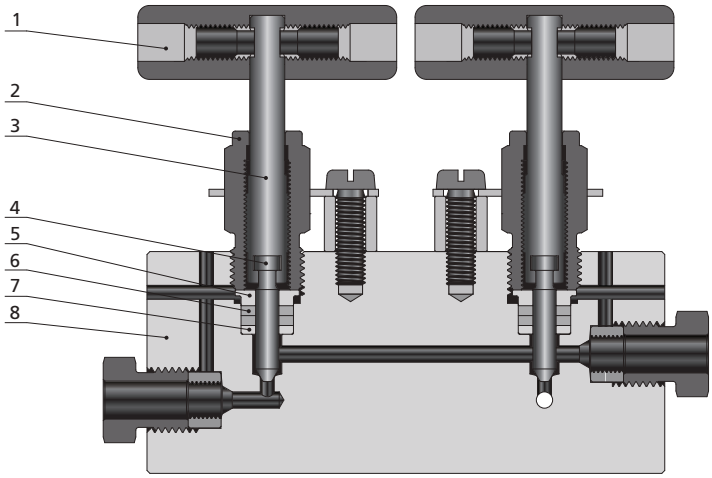

Item	Component	Material Grade
1	Handle	Stainless Steel
2	Packing Gland	C63000
3	Upper Stem	316 SS
4	*Lower Stem*	*S17400*
5	Packing Ring	C63000
6	*Packing*	*PTFE/RPTFE*
7	*Packing Washer*	*S17400*
8	*Body*	*316 SS*
	Lubricant	Molybdenum Disulfide

Wetted components listed in italics.

Ordering Information and Dimensions

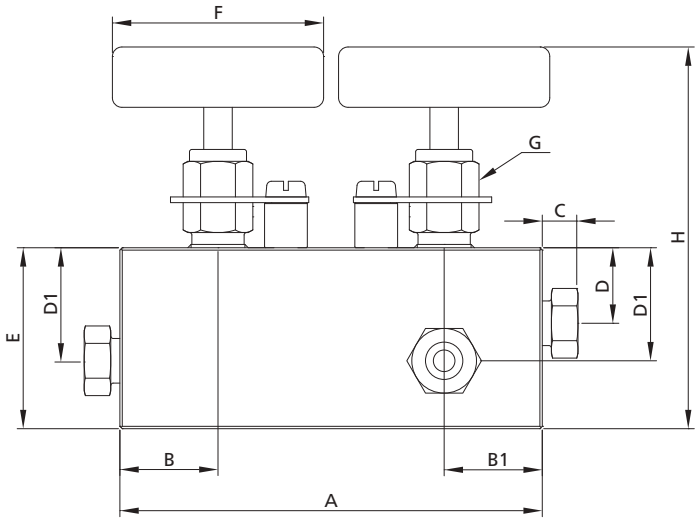

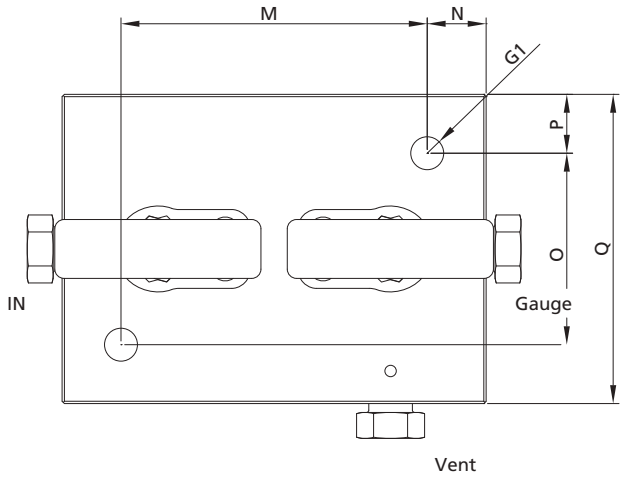

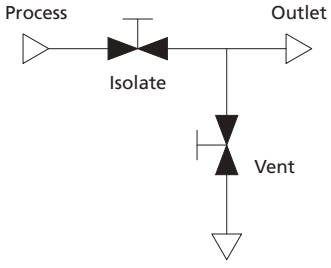

Dimensions

Ordering Number	Connection	Orifice in. (mm)	Dimensions, in. (mm)															
			A	B	B1	C	D	D1	E	F	G	G1	H	M	N	O	P	Q
15BNSS-FNS4	FNS4	0.094 (2.4)	3.78 (96.0)	0.90 (22.9)	1.00 (25.4)		0.81 (20.6)	1.08 (27.5)	1.50 (38.1)	1.75 (44.5)	0.63 (15.9)	0.28 (7.1)	3.26 (82.7)	3.03 (77.0)	0.37 (9.5)	1.25 (31.8)	0.37 (9.5)	2.00 (50.8)
15BNSS-FNS6	FNS6	0.094 (2.4)	3.88 (98.5)	1.00 (25.4)	1.00 (25.4)		0.81 (20.6)	1.08 (27.5)	1.58 (40.2)	1.75 (44.5)	0.63 (15.9)	0.28 (7.1)	3.34 (84.8)	3.13 (79.5)	0.37 (9.5)	1.25 (31.8)	0.37 (9.5)	2.00 (50.8)
20BNSS-MF4	MF4	0.094 (2.4)	3.5 (88.9)	0.81 (20.6)	0.81 (20.6)	0.38 (9.7)	0.81 (20.6)	1.08 (27.5)	1.50 (38.1)	1.75 (44.5)	0.63 (15.9)	0.28 (7.1)	3.26 (82.7)	2.74 (69.5)	0.37 (9.5)	1.25 (31.8)	0.37 (9.5)	2.00 (50.8)
20BNSS-MF6	MF6	0.094 (2.4)	3.88 (98.5)	1.00 (25.4)	1.00 (25.4)	0.44 (11.2)	0.81 (20.6)	1.08 (27.5)	1.50 (38.1)	1.75 (44.5)	0.63 (15.9)	0.28 (7.1)	3.26 (82.7)	3.13 (79.5)	0.37 (9.5)	1.25 (31.8)	0.37 (9.5)	2.00 (50.8)

Notes: 1. G is the drill dimension of packing gland mounting hole.
2. G1 is the panel mounting drill size.
3. H is the dimension of stem in closed position.
4. All dimensions are for reference only and are subject to change. For dimensions not shown above, please contact FITOK Group or our authorized distributors.

Ordering Number Description

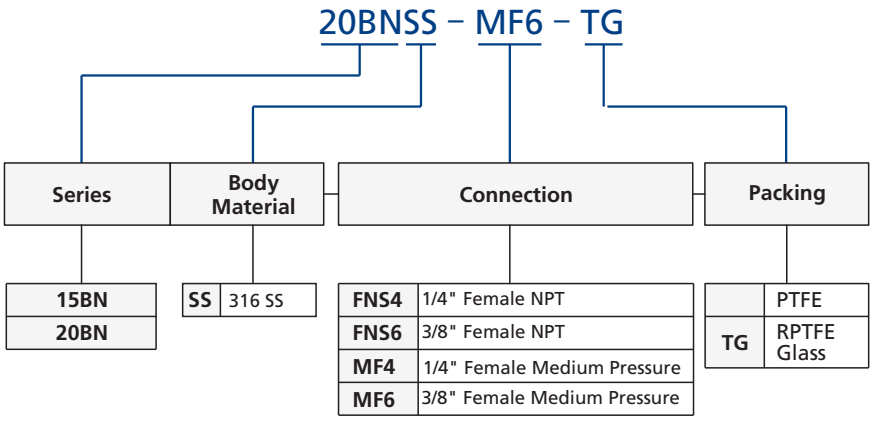

Notes: 1. For more details regarding Medium Pressure connections, please see **Connection Information** on A-02.
2. "Ordering Number Description" is a reference to understand the combination rules of FITOK product part number. Not all combinations are available.

Double Block & Bleed Needle Valves

Working Pressure Up to 20,000 psig (1379 bar)

Features

- ◎ Compact design provides large valve performance in a small package
- ◎ Reduced potential for leakage
- ◎ Metal-to-metal seating achieves ideal shutoff, longer stem/seat service lifetime for abrasive flow, excellent corrosion resistance and greater durability for repeated on/off cycles
- ◎ Non-rotating stem and bar stock body design
- ◎ Reliable packing gland locking device

Flow Data at 100°F (38°C)

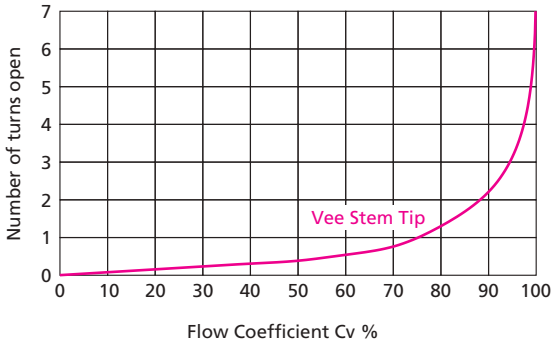

Pressure vs. Temperature Curve

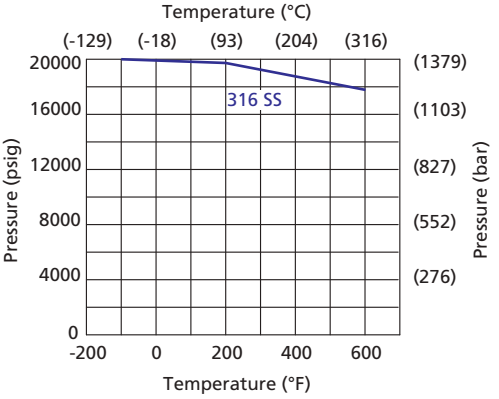

Technical Data

Series	Connection Type (Inlet and Outlet)	Vent Connection	Orifice in. (mm)	Cv	Working Pressure psig (bar)
20DBN	MF4	MF4	0.094 (2.4)	0.10	20,000 (1379)
	MF6	MF4	0.094 (2.4)	0.27	20,000 (1379)
	MF9	MF4	0.094 (2.4)	0.27	20,000 (1379)
	HF9	MF4	0.094 (2.4)	0.27	20,000 (1379)

Notes: 1. Packing Options
PTFE is the standard packing material, RPTFE glass also available.
PTFE: -100°F~450°F (-73°C~232°C).
RPTFE glass: -100°F~600°F (-73°C~316°C).
2. A variety of end connections are available on request. For connections not shown above, please contact FITOK Group or our authorized distributors.

Standard Materials of Construction

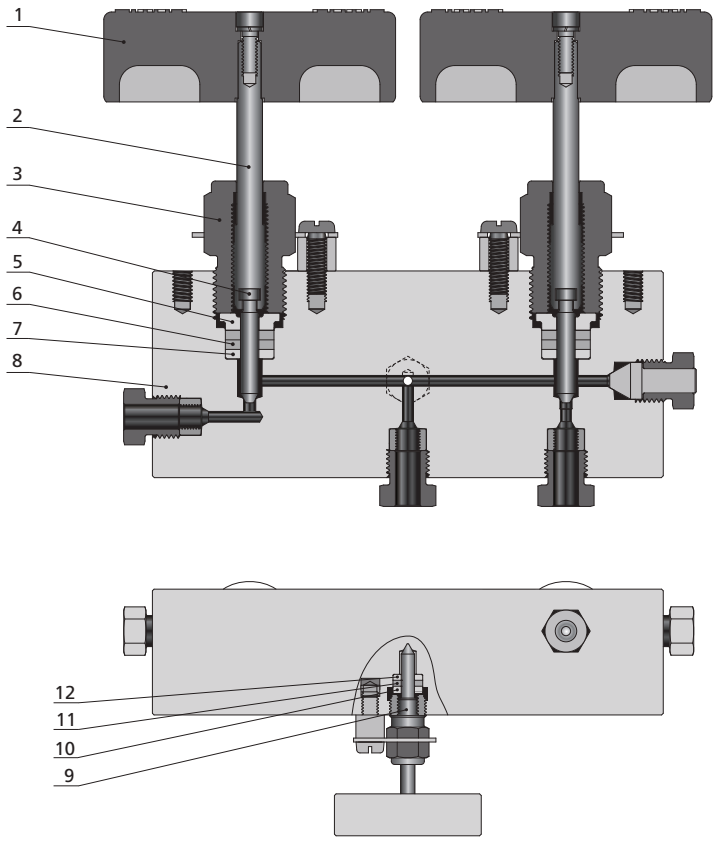

Bottom View

Item	Component	Material Grade
1	Handle	Stainless Steel
2	Upper Stem	316 SS
3	Packing Gland	C63000
4	*Lower Stem*	*S17400*
5	*Packing Ring*	*C63000*
6	*Packing*	*PTFE/RPTFE*
7	*Packing Washer*	*S17400*
8	*Body*	*316 SS*
9	*Vent Valve Stem*	*S17400*
10	Vent Valve Ring	C63000
11	*Vent Valve Packing*	*PTFE/RPTFE*
12	*Vent Valve Packing Washer*	*S17400*
	Lubricant	Molybdenum Disulfide

Wetted components listed in italics.

Ordering Information and Dimensions

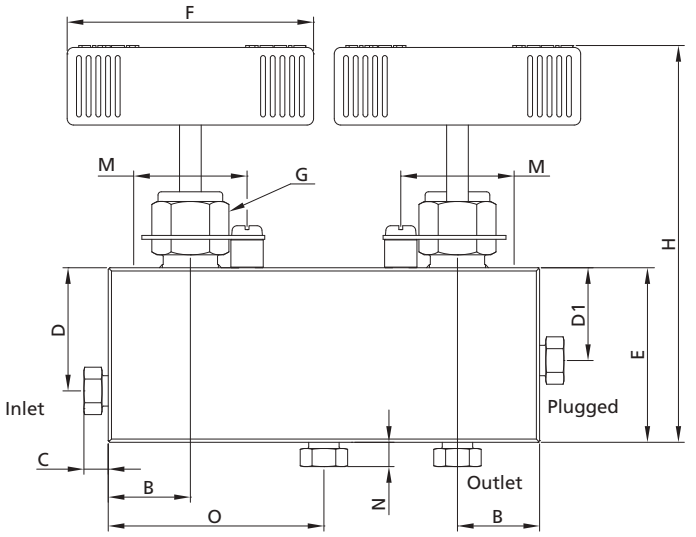

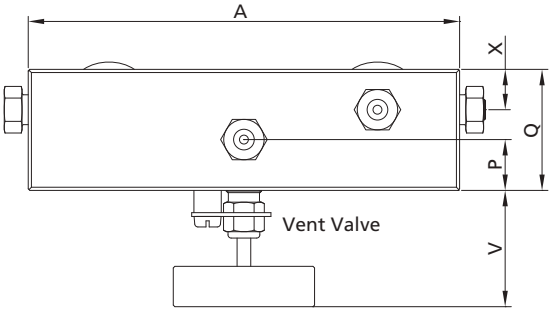

Bottom View

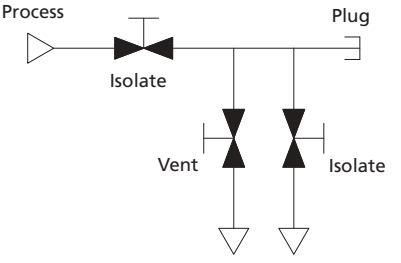

Dimensions

Ordering Number	Connection Type (Inlet and Outlet)	Orifice in. (mm)	Dimensions, in. (mm)															
			A	B	C	D	D1	E	F	G	H	M	N	O	P	Q	V	X
20DBNSS-MF4-MF4	MF4	0.094 (2.4)	5.25 (133.4)	1.00 (25.4)	0.38 (9.65)	1.50 (38.1)	1.13 (28.7)	2.13 (54.1)	3.00 (76.2)	1.00 (25.4)	4.82 (122.4)	1.38 (35.1)	0.50 (12.7)	2.62 (66.7)	0.63 (16.0)	1.50 (38.1)	1.47 (37.4)	0.50 (12.7)
20DBNSS-MF6-MF4	MF6	0.094 (2.4)	5.25 (133.4)	1.00 (25.4)	0.44 (11.2)	1.50 (38.1)	1.13 (28.7)	2.13 (54.1)	3.00 (76.2)	1.00 (25.4)	4.82 (122.4)	1.38 (35.1)	0.50 (12.7)	2.62 (66.7)	0.63 (16.0)	1.50 (38.1)	1.47 (37.4)	0.50 (12.7)
20DBNSS-MF9-MF4	MF9	0.094 (2.4)	5.88 (149.4)	1.31 (33.3)	0.55 (14.0)	1.50 (38.1)	1.13 (28.7)	3.00 (76.2)	3.00 (76.2)	1.00 (25.4)	5.69 (144.5)	1.38 (35.1)	0.50 (12.7)	2.94 (74.7)	0.63 (16.0)	1.75 (44.5)	1.47 (37.4)	0.75 (19.1)
20DBNSS-HF9-MF4	HF9	0.094 (2.4)	5.88 (149.4)	1.31 (33.3)	0.95 (24.1)	1.50 (38.1)	1.13 (28.7)	3.00 (76.2)	3.00 (76.2)	1.00 (25.4)	5.69 (144.5)	1.38 (35.1)	0.50 (12.7)	2.94 (74.7)	0.63 (16.0)	1.75 (44.5)	1.47 (37.4)	0.75 (19.1)

Notes: 1. Vent connection: 1/4" Female Medium Pressure.
2. G is the drill dimension of packing gland mounting hole.
3. G1 is the panel mounting drill size.
4. H is the dimension of stem in closed position.
5. All dimensions are for reference only and are subject to change. For dimensions not shown above, please contact FITOK Group or our authorized distributors.

Ordering Number Description

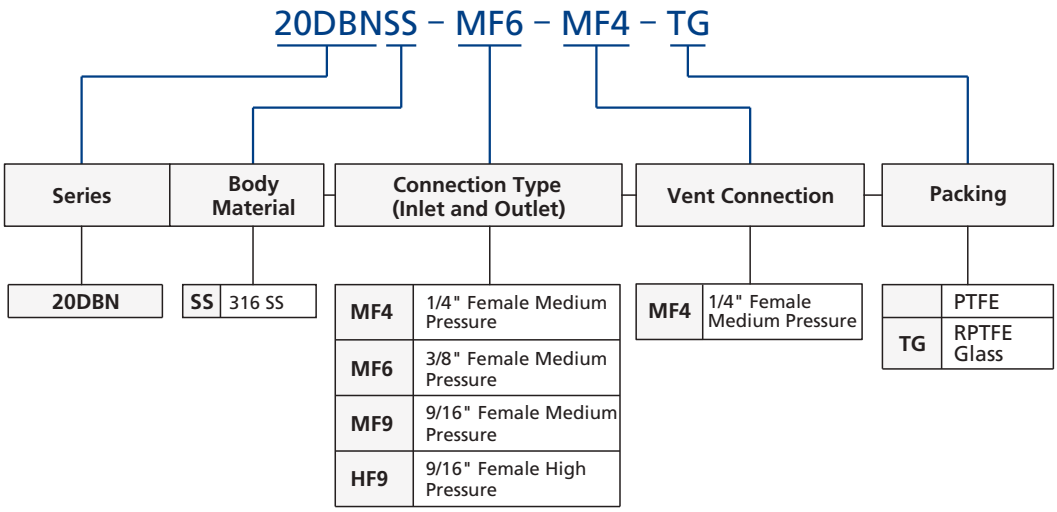

Notes: 1. For more details regarding Medium/High Pressure connections, please see **Connection Information** on A-02.
2. "Ordering Number Description" is a reference to understand the combination rules of FITOK product part number. Not all combinations are available.

Double Block & Bleed Ball Valves

Working Pressure Up to 15,000 psig (1034 bar)

Features

- Working temperature range from 0°F to 400°F (-17.8°C to 204°C) with fluorocarbon FKM O-rings; other O-ring materials available
- High tensile 316 stainless steel body material
- PEEK seats offer excellent resistance to chemicals, heat and abrasion
- Trunnion-style ball to prevent ball blowout
- Full-port flow path to minimize pressure drop
- Vee-stem vent valve
- Wide selection of tube and pipe end fittings available
- Quarter turn from open to closed with positive stop

Pressure vs. Temperature Curve

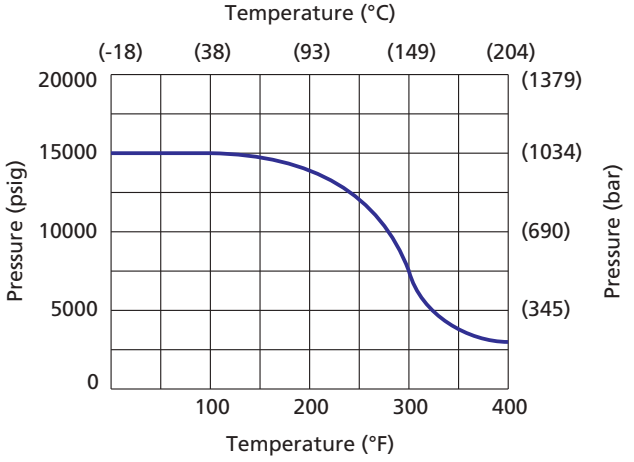

Standard Materials of Construction

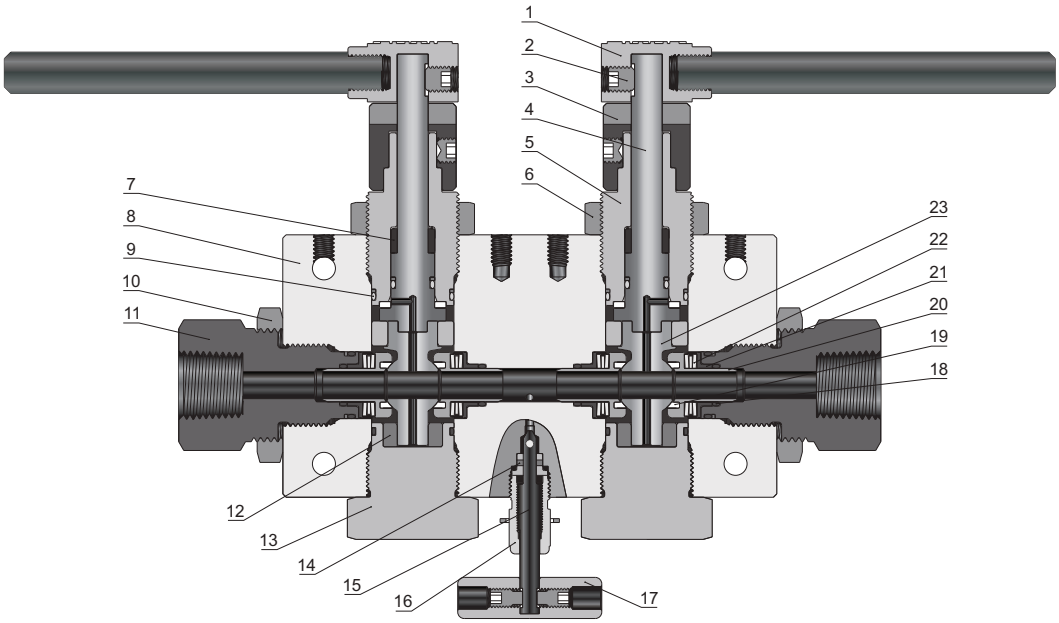

Item	Component	Material Grade
1	Handle	Stainless Steel
2	Set Screw	Stainless Steel
3	Stopping Device	316 SS
4	*Stem*	*316 SS*
5	*Packing Gland*	*316 SS*
6	Locking Piece	316 SS
7	*Stem Backup*	*PEEK*
8	*Valve Body*	*316 SS*
9	*O-Ring*	*Fluorocarbon FKM*
10	Lock Nut	316 SS
11	*Seat Gland*	*316 SS*
12	*Bearing*	*PEEK*
13	*Bottom Gland*	*316 SS*
14	*Vent Valve Packing*	*PTFE*
15	*Vent Valve Stem*	*S17400*
16	Vent Valve Packing Gland	C63000
17	Vent Valve Handle	Stainless Steel
18	*O-Ring*	*Fluorocarbon FKM*
19	*Seat*	*PEEK*
20	*Seat Retainer*	*S17400*
21	*Belleville Backup*	*S17400*
22	*Belleville Washers*	*S17700*
23	*Ball*	*316 SS*
	Lubricant	Molybdenum Disulfide/Fluorinated-Based

Wetted components listed in italics.

Dimensions

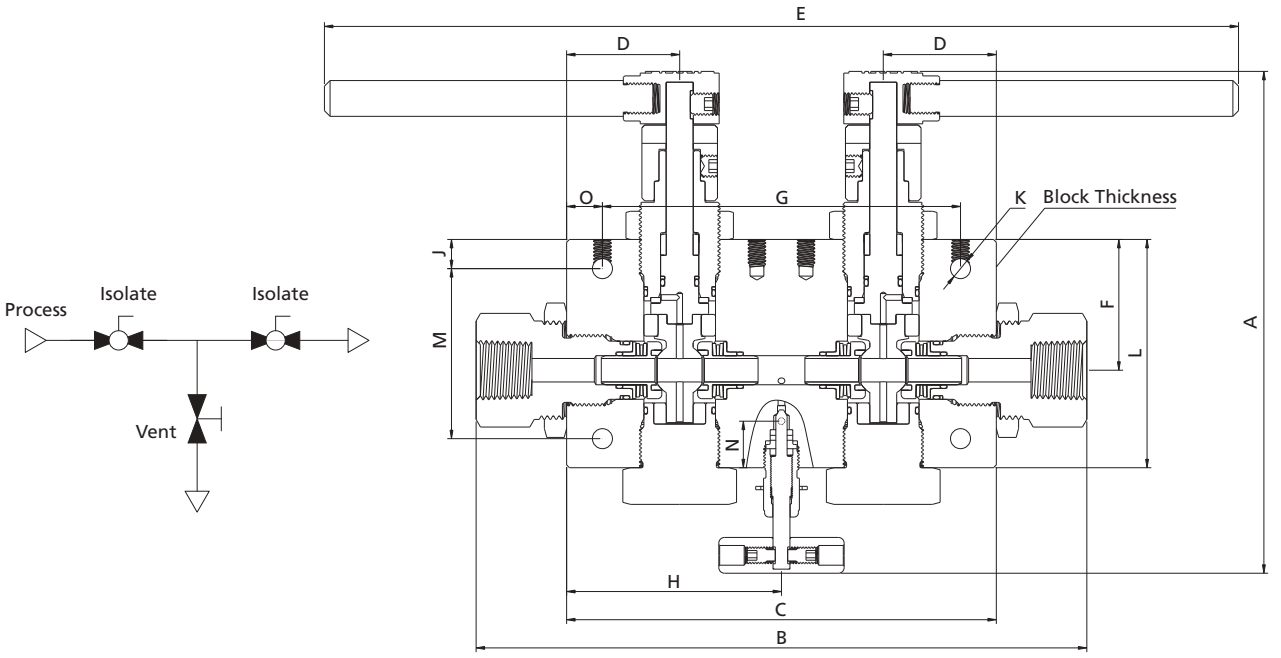

Dimensions, in. (mm)														
A	B	C	D	E	F	G	H	J	K	L	M	N①	O	Block Thickness
7.14 (181.4)	8.53 (216.6)	6 (152.4)	1.58 (40.1)	12.76 (324.2)	1.83 (46.4)	5 (127)	3 (76.2)	0.41 (10.3)	0.28 (7.1)	3.19 (81)	2.38 (60.4)	0.65 (16.5)	0.5 (12.7)	1.75 (44.45)

Notes: 1. *N: Vent connection on back side.*
2. All dimensions are for reference only and are subject to change.

Panel Mounting Dimensions

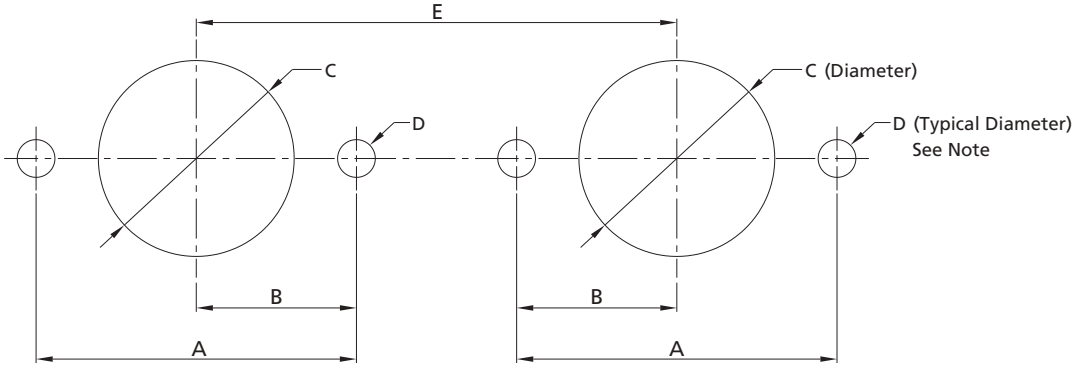

Dimensions, in. (mm)				
A	B	C	D	E
2.16 (54.8)	1.08 (27.4)	1.5 (38.1)	0.28 (7.1)	2.84 (72.2)

Notes: 1. Body mounting 1/4-20 thread.
2. All dimensions are for reference only and are subject to change.

Ordering Information and Dimensions

Series	Ordering Number	Connection Type (Inlet and Outlet)	Vent Connection	Orifice No.	Orifice Size in. (mm)	Cv	Working Pressure psig (bar)
15DBB	15DBBSS-DFF8-FNS4-6	DFF8	FNS4	6	0.33 (8.3)	2.3	15,000 (1034)
	15DBBSS-MF4-MF4-6	MF4	MF4		0.11 (2.8)	0.23	
	15DBBSS-MF6-MF4-6	MF6	MF4		0.20 (5.2)	0.9	
	15DBBSS-MF9-MF4-6	MF9	MF4		0.33 (8.3)	2.3	
	15DBBSS-MF9-FNS4-6	MF9	FNS4		0.33 (8.3)	2.3	
	15DBBSS-MF12-MF4-6	MF12	MF4		0.33 (8.3)	2.3	
	15DBBSS-MF16-FNS4-6	MF16	FNS4		0.33 (8.3)	2.3	
	15DBBSS-FNS4-FNS4-6	FNS4	FNS4		0.33 (8.3)	2.3	
	15DBBSS-FNS6-FNS4-6	FNS6	FNS4		0.33 (8.3)	2.3	
	15DBBSS-FNS8-FNS4-6	FNS8	FNS4		0.33 (8.3)	2.3	

Ordering Number Description

15DBBSS – MF9 – FNS4 – 6 – B

Series	Body Material	Connection Type (Inlet and Outlet)	Connection Size	Vent Connection Type	Connection Size	Orifice No.	O-Ring Material
15DBB	SS 316 SS	DFF Female 20D Series	4 1/4"	MF Female Medium Pressure	4 1/4"	6 3/8"	Fluorocarbon FKM
		MF Female Medium Pressure	6 3/8"	FNS Female NPT			B NBR
		FNS Female NPT	8 1/2"				
			9 9/16"				
			12 3/4"				
			16 1"				

Notes: 1. For more details regarding 20D Series and Medium Pressure connections, please see **Connection Information** on A-02.

2. "Ordering Number Description" is a reference to understand the combination rules of FITOK product part number. Not all combinations are available.

Designator	O-Ring Material	Working Temperature Range, °F (°C)
	Fluorocarbon FKM	0 to 400 (-17.8 to 204)
B	NBR	-10 to 250 (-23 to 121)

Sour Service Products



Sour Service Products

Fittings: 30,000 psig (2068 bar)
Tubing: 30,000 psig (2068 bar)
Needle Valves: 30,000 psig (2068 bar)
Bleed Valves: 20,000 psig (1379 bar)
Gauge Valves: 20,000 psig (1379 bar)
Check Valves: 30,000 psig (2068 bar)



Contents

20M Series Medium Pressure Fittings
F-05

60H Series High Pressure Fittings
F-06

PMH Series Pipe Fittings
F-07

AMH Series Adapter Fittings
F-08

T20M Series Tubing
F-10

T60H Series Tubing
F-12

Needle Valves
Working Pressure Up to 30,000 psig (2068 bar) F-14

Bleed Valves
Working Pressure Up to 20,000 psig (1379 bar) F-27

Gauge Valves
Working Pressure Up to 20,000 psig (1379 bar) F-30

Check Valves
Working Pressure Up to 30,000 psig (2068 bar) F-34

FITOK designs and manufactures medium & high pressure valves, fittings and tubing for use with sour oil and gas (H_2S). These components are referred to as FITOK type S components.

Sour Oil and Gas (H_2S) Service or Standard Service

FITOK standard grade products are offered for standard oil field service and type S components for challenging H_2S service. FITOK type S components provide optimum resistance to H_2S through the use of the specific materials and procedures.

Working Pressure

Type S components are rated for working pressure up to 30,000 psig (2068 bar) at 100°F (38°C).

NACE MR0175 Compliant Materials

Standard material for type S component is annealed 316 SS and all pressure-containing materials used comply with NACE MR0175.

20M Series Medium Pressure Fittings

Features

◎ Working pressure: 10,000 psig (690 bar)
◎ Coned-and-threaded connection
◎ Tube sizes available in 1/4", 3/8", 9/16", 3/4" and 1"
◎ Annealed 316 stainless steel as standard material, other materials available upon request
◎ Easy to disconnect and retighten
◎ Metal-to-metal seal to provide perfect leak-tight service for working conditions from critical vacuum to medium pressure
◎ Every fitting marked with size, material and trace ID

Construction

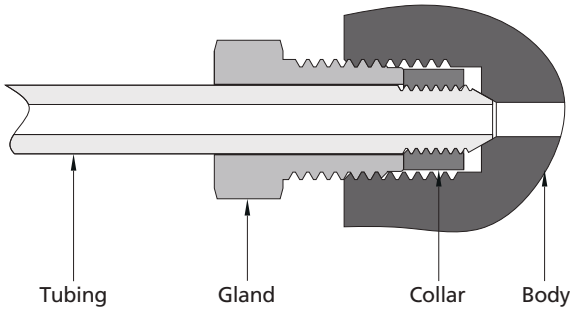

Ordering Information

The structure of FITOK's type S fittings are the same as standard medium pressure fittings. To get the complete ordering number of type S medium pressure fittings, add "-S" as a suffix to the ordering number of standard medium pressure fittings. If glands and collars are not needed, add "-SWO" as a suffix.
Examples:
1. 9/16" Union, the ordering number is SS-MU-MF9-**S.**
2. 3/8" Tee without glands and collars, the ordering number is SS-MT-MF6-**SWO.**

The sizes of type S fittings are the same as standard medium pressure fittings, please refer to ***20M Series Medium Pressure Fittings*** on A-19.

Installation Instructions

Please see A-112.

Connection Information

Please see A-03.

60H Series High Pressure Fittings

Features

- Working pressure: 30,000 psig (2068 bar)
- Working temperature range: -423°F to 1200°F (-252°C to 649°C)
- Coned-and-threaded connection
- Tube sizes available in 1/4", 3/8" and 9/16"
- Annealed 316 stainless steel as standard material, other materials available upon request
- Easy to disconnect and retighten
- Metal-to-metal seal to provide perfect leak-tight service from critical vacuum to high pressure
- Every fitting marked with size, material and trace ID

Construction

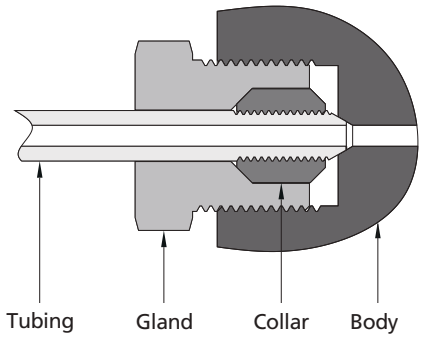

Ordering Information

The structure of FITOK's type S fittings are the same as standard high pressure fittings. To get the complete ordering number of type S high pressure fittings, add "-S" as a suffix to the ordering number of standard high pressure fittings. If glands and collars are not needed, add "-SWO" as a suffix.
Examples:
1. 9/16" Union, the ordering number is SS-HU-HF9-**S.**
2. 3/8" Tee without glands and collars, the ordering number is SS-HT-HF6-**SWO.**

The sizes of type S fittings are the same as standard high pressure fittings, please refer to ***60H Series High Pressure Fittings*** on A-28.

Installation Instructions

Please see A-112.

Connection Information

Please see A-04.

PMH Series Pipe Fittings

Features

◎ Annealed 316 stainless steel as standard material, other materials available upon request
◎ Radius junction design with elbows provides smooth flow path
◎ Every fitting marked with size, material and trace ID

Working Pressure

◎ Working pressures of pipe fittings are dependent on the end connection with the lowest working pressure
◎ Working pressures of the end connections are shown in the table below

End Connection	Working Pressure psig (bar)	End Connection	Working Pressure psig (bar)
NS2/FNS2	10,000 (690)	RT2/FRT2	10,000 (690)
NS4/FNS4	10,000 (690)	RT4/FRT4	10,000 (690)
NS6/FNS6	10,000 (690)	RT6/FRT6	10,000 (690)
NS8/FNS8	10,000 (690)	RT8/FRT8	10,000 (690)
NS12/FNS12	10,000 (690)	RT12/FRT12	10,000 (690)
NS16/FNS16	10,000 (690)	RT16/FRT16	10,000 (690)

Cautions

◎ Do not loosen or tighten fittings when the system is pressurized
◎ Always use proper thread sealants on tapered pipe threads

Ordering Information

The structure of FITOK type S pipe fittings are the same as standard pipe fittings. To get the complete ordering number of type S pipe fittings, add "-S" as a suffix to the ordering number of standard pipe fittings. Examples: 3/8" NPT Hex Nipple, the ordering number is: SS-HPN-NS6-**S.**

The sizes of type S pipe fittings are the same as standard pipe fittings, please refer to ***PMH Series Pipe Fittings*** on A-35.

AMH Series Adapter Fittings

Features

◎ Annealed 316 stainless steel as standard material, other materials available upon request
◎ Every fitting marked with size, material and trace ID

Working Pressure

◎ Working pressures of AMH series adapter fittings are dependent on the end connection with the lowest working pressure
◎ Working pressures of the end connections are shown in the table below

End Connection	Working Pressure psig (bar)	End Connection	Working Pressure psig (bar)	End Connection	Working Pressure psig (bar)
MM4/MCP4/MF4	10,000 (690)	MCT4	10,000 (690)	HM4/HCP4/HF4	30,000 (2068)
MM6/MCP6/MF6	10,000 (690)	MCT6	10,000 (690)	HM6/HCP6/HF6	30,000 (2068)
MM9/MCP9/MF9	10,000 (690)	MCT9	10,000 (690)	HM9/HCP9/HF9	30,000 (2068)
MM12/MCP12/MF12	10,000 (690)	MCT12	10,000 (690)	——	——
MM16/MCP16/MF16	10,000 (690)	MCT16	10,000 (690)	——	——

End Connection	Working Pressure psig (bar)	End Connection	Working Pressure psig (bar)	End Connection	Working Pressure psig (bar)	End Connection	Working Pressure psig (bar)
HCT4	30,000 (2068)	NS2/FNS2	10,000 (690)	JM4/JF4	10,000 (690)	TM9	30,000 (2068)
HCT6	30,000 (2068)	NS4/FNS4	10,000 (690)	JM6/JF6	10,000 (690)	TM12	20,000 (1379)
HCT9	30,000 (2068)	NS6/FNS6	10,000 (690)	JM8/JF8	10,000 (690)	TM14	30,000 (2068)
——	——	NS8/FNS8	10,000 (690)	JM10/JF10	10,000 (690)	TM16	20,000 (1379)
——	——	NS12/FNS12	10,000 (690)	JM12/JF12	10,000 (690)	TM21	10,000 (690)
——	——	NS16/FNS16	10,000 (690)	JM16/JF16	10,000 (690)	——	——

Cautions

◎ Do not loosen or tighten fittings when the system is pressurized
◎ Always use proper thread sealants on tapered pipe threads

Ordering Information

Except that DFT, DCP and DFF connections are not available, type S AMH series adapter fittings have the same connection types with standard AMH series adapter fittings. Add "-S" as a suffix to the ordering number of standard AMH series adapter fittings to get the complete ordering number of type S AMH series adapter fittings. For fittings with "MF" or "HF" connection, if glands and collars are not needed, add "-SWO" as a suffix.
Examples:

1. For adapter fittings with MM9 and NS8 connections, the ordering number is SS-MMA-MM9-NS8-**S**.
2. For adapter fittings with HF6 and MF4 connections, if glands and collars are not needed, the ordering number is SS-FFC-HF6-MF4-**SWO.**

The sizes of type S AMH series adapter fittings are the same as standard AMH series adapter fittings, please refer to ***AMH Series Adapter Fittings*** on A-66.

T20M Series Tubing

Features

- Working pressure: 10,000 psig (690 bar)
- Working temperature range: -423°F to 1200°F (-252°C to 649°C)
- Annealed 316/316L stainless steel as standard material, other materials available upon request
- Every tubing marked with material, size and heat number

Ordering Information

Tube O.D. in.	Tube I.D. in.	Material Grade	Basic Ordering Number	Max./Min. O.D. in. (mm)
1/4	0.109	Annealed 316/316L SS	SS-T20M-4-	0.248/0.243 (6.30/6.17)
3/8	0.203	Annealed 316/316L SS	SS-T20M-6-	0.370/0.365 (9.40/9.27)
9/16	0.312	Annealed 316/316L SS	SS-T20M-9-	0.557/0.552 (14.15/14.02)
3/4	0.438	Annealed 316/316L SS	SS-T20M-12-	0.745/0.740 (18.92/18.80)
1	0.562	Annealed 316/316L SS	SS-T20M-16-	0.995/0.990 (25.27/25.14)

To get the complete ordering number of type S tubing, add the length designator "-S" as a suffix to the basic ordering number.
Examples:
1. For 20 feet of 3/8" O.D. tubing, the complete ordering number is SS-T20M-6-**20F-S.**
2. For 6 meters of 3/4" O.D. tubing, the complete ordering number is SS-T20M-12-**6M-S.**

The tubing is available in random lengths but no more than 20 feet (6 meters).



Coned and Threaded Nipples

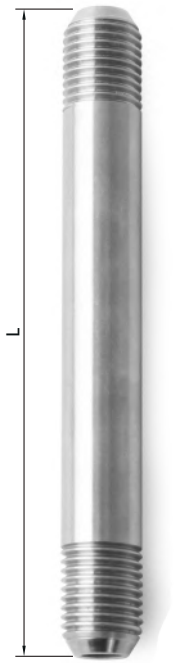

Tube O.D. in.	Tube I.D. in.	Ordering Number	L in. (mm)
1/4	0.109	SS-T20M-4CT-2.75N-S	2.75 (69.9)
1/4	0.109	SS-T20M-4CT-3N-S	3 (76.2)
1/4	0.109	SS-T20M-4CT-4N-S	4 (101.6)
1/4	0.109	SS-T20M-4CT-6N-S	6 (152.4)
1/4	0.109	SS-T20M-4CT-8N-S	8 (203.2)
1/4	0.109	SS-T20M-4CT-10N-S	10 (254.0)
1/4	0.109	SS-T20M-4CT-12N-S	12 (304.8)
3/8	0.203	SS-T20M-6CT-3N-S	3 (76.2)
3/8	0.203	SS-T20M-6CT-4N-S	4 (101.6)
3/8	0.203	SS-T20M-6CT-6N-S	6 (152.4)
3/8	0.203	SS-T20M-6CT-8N-S	8 (203.2)
3/8	0.203	SS-T20M-6CT-10N-S	10 (254.0)
3/8	0.203	SS-T20M-6CT-12N-S	12 (304.8)
9/16	0.312	SS-T20M-9CT-4N-S	4 (101.6)
9/16	0.312	SS-T20M-9CT-6N-S	6 (152.4)
9/16	0.312	SS-T20M-9CT-8N-S	8 (203.2)
9/16	0.312	SS-T20M-9CT-10N-S	10 (254.0)
9/16	0.312	SS-T20M-9CT-12N-S	12 (304.8)
3/4	0.438	SS-T20M-12CT-4N-S	4 (101.6)
3/4	0.438	SS-T20M-12CT-6N-S	6 (152.4)
3/4	0.438	SS-T20M-12CT-8N-S	8 (203.2)
3/4	0.438	SS-T20M-12CT-10N-S	10 (254.0)
3/4	0.438	SS-T20M-12CT-12N-S	12 (304.8)
1	0.562	SS-T20M-16CT-6N-S	6 (152.4)
1	0.562	SS-T20M-16CT-8N-S	8 (203.2)
1	0.562	SS-T20M-16CT-10N-S	10 (254.0)
1	0.562	SS-T20M-16CT-12N-S	12 (304.8)

Note: Do not recommend bending of tubing.

T60H Series Tubing

Features

- Working pressure: 30,000 psig (2068 bar)
- Working temperature range: -423°F to 1200°F (-252°C to 649°C)
- Annealed 316/316L stainless steel as standard material, other materials available upon request
- Every tubing marked with material, size and heat number

Ordering Information

Tube O.D. in.	Tube I.D. in.	Material Grade	Basic Ordering Number	Max./Min. O.D. in. (mm)
1/4	0.083	Annealed 316/316L SS	SS-T60H-4-	0.248/0.243 (6.30/6.17)
3/8	0.125	Annealed 316/316L SS	SS-T60H-6-	0.370/0.365 (9.40/9.27)
9/16	0.188	Annealed 316/316L SS	SS-T60H-9-	0.557/0.552 (14.15/14.02)

To get the complete ordering number of type S tubing, add the length designator "-S" as a suffix to the basic ordering number.
Examples:
1. For 20 feet of 1/4" O.D. tubing, the complete ordering number is SS-T60H-4-**20F-S.**
2. For 6 meters of 9/16" O.D. tubing, the complete ordering number is SS-T60H-9-**6M-S.**

The tubing is available in random lengths but no more than 20 feet (6 meters).



Coned and Threaded Nipples

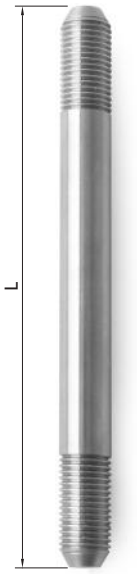

Tube O.D. in.	Tube I.D. in.	Ordering Number	L in. (mm)
1/4	0.083	SS-T60H-4CT-2.75N-S	2.75 (69.9)
1/4	0.083	SS-T60H-4CT-3N-S	3 (76.2)
1/4	0.083	SS-T60H-4CT-4N-S	4 (101.6)
1/4	0.083	SS-T60H-4CT-6N-S	6 (152.4)
1/4	0.083	SS-T60H-4CT-8N-S	8 (203.2)
1/4	0.083	SS-T60H-4CT-10N-S	10 (254.0)
1/4	0.083	SS-T60H-4CT-12N-S	12 (304.8)
3/8	0.125	SS-T60H-6CT-3N-S	3 (76.2)
3/8	0.125	SS-T60H-6CT-4N-S	4 (101.6)
3/8	0.125	SS-T60H-6CT-6N-S	6 (152.4)
3/8	0.125	SS-T60H-6CT-8N-S	8 (203.2)
3/8	0.125	SS-T60H-6CT-10N-S	10 (254.0)
3/8	0.125	SS-T60H-6CT-12N-S	12 (304.8)
9/16	0.188	SS-T60H-9CT-4N-S	4 (101.6)
9/16	0.188	SS-T60H-9CT-6N-S	6 (152.4)
9/16	0.188	SS-T60H-9CT-8N-S	8 (203.2)
9/16	0.188	SS-T60H-9CT-10N-S	10 (254.0)
9/16	0.188	SS-T60H-9CT-12N-S	12 (304.8)

Note: Do not recommend bending of tubing.

Needle Valves

Working Pressure Up to 30,000 psig (2068 bar)

Features

- Annealed 316 stainless steel for valve body and nickel-based alloy for lower stem
- Metal-to-metal seating achieves ideal shutoff, longer stem/seat service lifetime for abrasive flow, excellent corrosion resistance and greater durability for repeated on/off cycles
- Non-rotating stem and bar stock body design
- Easy to assemble and replace packing
- Reliable packing gland locking device
- Options for Vee or Regulating stem tips
- Five flow patterns available

Technical Data

15N Series

Connection Size	Connection	Orifice in. (mm)	Cv	Working Pressure psig (bar)	Working Temperature Range °F (°C)
1/8" Female NPT	FNS2	0.078 (1.98)	0.11	10,000 (690)	-100 to 400 (-73 to 204)
1/8" Female ISO Tapered Thread	FRT2				
1/4" Female NPT	FNS4	0.203 (5.16)	0.63	10,000 (690)	
1/4" Female ISO Tapered Thread	FRT4				
3/8" Female NPT	FNS6	0.219 (5.56)	0.75	10,000 (690)	
3/8" Female ISO Tapered Thread	FRT6				
1/2" Female NPT	FNS8	0.312 (7.92)	1.30	10,000 (690)	
1/2" Female ISO Tapered Thread	FRT8				

20N Series

Tube O.D. in.	Connection	Orifice in. (mm)	Cv	Working Pressure psig (bar)	Working Temperature Range °F (°C)
1/4	MF4	0.125 (3.18)	0.31	10,000 (690)	-100 to 600 (-73 to 316)
3/8	MF6	0.204 (5.18)	0.68	10,000 (690)	
9/16	MF9	0.312 (7.92)	1.30	10,000 (690)	
3/4	MF12	0.438 (11.13)	2.50	10,000 (690)	
1	MF16	0.562 (14.27)	4.40	10,000 (690)	

30N Series					
Tube O.D. in.	Connection	Orifice in. (mm)	Cv	Working Pressure psig (bar)	Working Temperature Range °F (°C)
1/4	HF4	0.094 (2.39)	0.12	20,000 (1379)	-100 to 600 (-73 to 316)
3/8	HF6	0.125 (3.18)	0.23	20,000 (1379)	
9/16	HF9	0.125 (3.18)	0.33	20,000 (1379)	

60N Series					
Tube O.D. in.	Connection	Orifice in. (mm)	Cv	Working Pressure psig (bar)	Working Temperature Range °F (°C)
1/4	HF4	0.063 (1.59)	0.08	30,000 (2068)	-100 to 600 (-73 to 316)
3/8	HF6	0.063 (1.59)	0.09	30,000 (2068)	
9/16	HF9	0.078 (1.98)	0.14	30,000 (2068)	

Notes: 1. Cv values shown are for 2-way straight valve pattern. For 2-way angle pattern, increase Cv value by 50% (based on water).
2. Packing Options
PTFE is the standard packing material for 15N, 20N and 30N series, RPTFE glass also available.
Packing material for 60N Series is RPTFE only.
PTFE: -100°F~450°F (-73°C~232°C)
RPTFE glass: -100°F~600°F (-73°C~316°C)

Flow Data at 100°F (38°C)

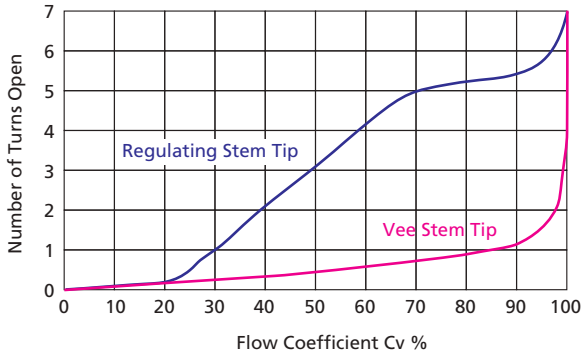

Pressure vs. Temperature Curve

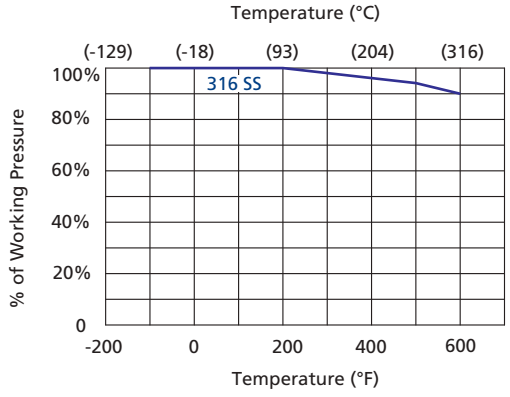

Standard Materials of Construction

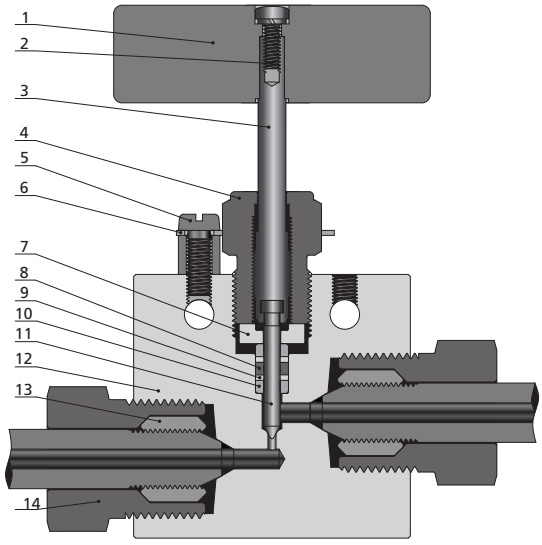

Item	Component	Material Grade
1	Handle	Stainless Steel
2	Handle Screw	Stainless Steel
3	Upper Stem	316 SS
4	Packing Gland	316 SS
5	Locking Screw	Stainless Steel
6	Locking Plate	304 SS
7	Packing Ring	316 SS (For 15N, 20N and 30N Series), S17400 (For 60N Series)
8	*Packing*	*PTFE/RPTFE*
9	*Retaining Ring*	*PEEK (For 60N Series Only)*
10	*Packing Washer*	*316 SS (For 15N, 20N and 30N Series), Nickel-based Alloy (For 60N Series)*
11	*Lower Stem*	*Nickel-Based Alloy*
12	*Body*	*Annealed 316 SS*
13	Collar	Annealed 316 SS (For Tube Connections)
14	Gland	Annealed 316 SS (For Tube Connections)
	Lubricant	Molybdenum Disulfide

Wetted components listed in italics.

Ordering Information and Dimensions (Pipe Connection)

Straight

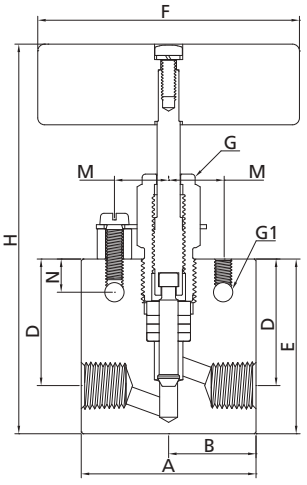

Angle

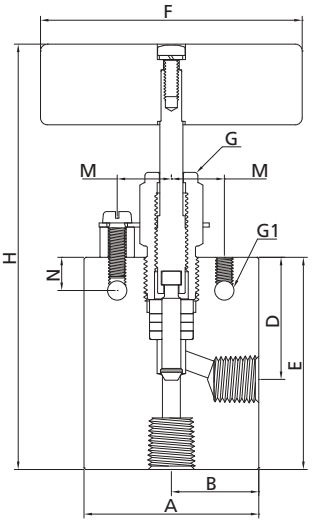

3-way/2 on pressure

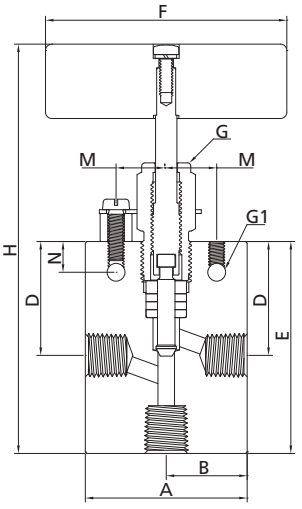

3-way/1 on pressure

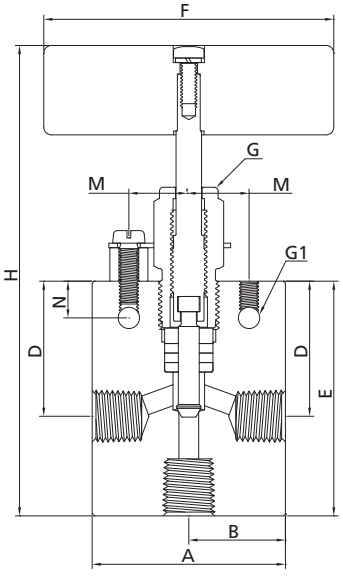

3-way/2 stem manifold

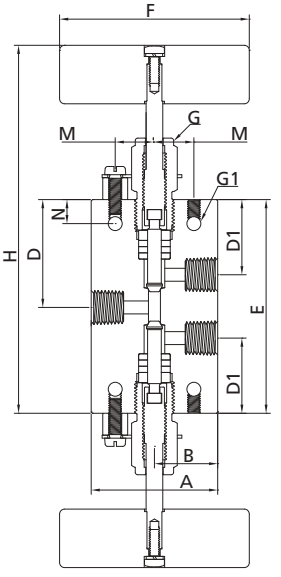

Ordering Information and Dimensions (Pipe Connection)

15N Series (Straight)

Ordering Number	Connection	Orifice in. (mm)	Dimensions, in. (mm)												
			A	B	C	D	D1	E	F	G	G1	H	M	N	Thickness
15NSS-FNS2-1-S	FNS2	0.078 (1.98)	1.50 (38.1)	0.75 (19.1)		0.81 (20.6)		1.25 (31.8)	1.75 (44.5)	0.62 (15.8)	0.17 (4.3)	3.00 (76.4)	0.56 (14.2)	0.31 (7.9)	0.63 (15.9)
15NSS-FRT2-1-S	FRT2														
15NSS-FNS4-1-S	FNS4	0.203 (5.2)	2.00 (50.8)	1.00 (25.4)		1.41 (35.8)		2.00 (50.8)	3.00 (76.2)	0.75 (19.1)	0.22 (5.6)	4.89 (124.1)	0.62 (15.8)	0.38 (9.7)	0.75 (19.1)
15NSS-FRT4-1-S	FRT4														
15NSS-FNS6-1-S	FNS6	0.219 (5.56)	2.50 (63.5)	1.25 (31.8)		1.41 (35.8)		2.00 (50.8)	3.00 (76.2)	0.75 (19.1)	0.22 (5.6)	4.85 (123.1)	0.62 (15.8)	0.38 (9.7)	1.00 (25.4)
15NSS-FRT6-1-S	FRT6														
15NSS-FNS8-1-S	FNS8	0.312 (7.92)	3.00 (76.2)	1.50 (38.1)		2.06 (52.3)		2.88 (73.2)	4.00 (101.6)	1.00 (25.4)	0.34 (8.6)	6.18 (157.2)	0.69 (17.5)	0.50 (12.7)	1.38 (35.1)
15NSS-FRT8-1-S	FRT8														

15N Series (Angle)

Ordering Number	Connection	Orifice in. (mm)	Dimensions, in. (mm)												
			A	B	C	D	D1	E	F	G	G1	H	M	N	Thickness
15NSS-FNS2-2-S	FNS2	0.078 (1.98)	1.50 (38.1)	0.75 (19.1)		0.81 (20.6)		1.38 (34.9)	1.75 (44.5)	0.62 (15.8)	0.17 (4.3)	3.13 (79.5)	0.56 (14.2)	0.31 (7.9)	0.63 (15.9)
15NSS-FRT2-2-S	FRT2														
15NSS-FNS4-2-S	FNS4	0.203 (5.2)	2.00 (50.8)	1.00 (25.4)		1.41 (35.8)		2.44 (62.0)	3.00 (76.2)	0.75 (19.1)	0.22 (5.6)	5.33 (135.4)	0.62 (15.8)	0.38 (9.7)	0.75 (19.1)
15NSS-FRT4-2-S	FRT4														
15NSS-FNS6-2-S	FNS6	0.219 (5.56)	2.50 (63.5)	1.25 (31.8)		1.41 (35.8)		2.44 (62.0)	3.00 (76.2)	0.75 (19.1)	0.22 (5.6)	5.34 (135.7)	0.62 (15.8)	0.38 (9.7)	1.00 (25.4)
15NSS-FRT6-2-S	FRT6														
15NSS-FNS8-2-S	FNS8	0.312 (7.92)	3.00 (76.2)	1.50 (38.1)		2.06 (52.3)		3.38 (85.9)	4.00 (101.6)	1.00 (25.4)	0.34 (8.6)	6.69 (169.9)	0.69 (17.5)	0.50 (12.7)	1.38 (35.1)
15NSS-FRT8-2-S	FRT8														

15N Series (3-way/2 on pressure)

Ordering Number	Connection	Orifice in. (mm)	Dimensions, in. (mm)												
			A	B	C	D	D1	E	F	G	G1	H	M	N	Thickness
15NSS-FNS2-4-S	FNS2	0.078 (1.98)	1.50 (38.1)	0.75 (19.1)		0.81 (20.6)		1.57 (40.0)	1.75 (44.5)	0.62 (15.8)	0.17 (4.3)	3.33 (84.6)	0.56 (14.2)	0.31 (7.9)	0.63 (15.9)
15NSS-FRT2-4-S	FRT2														
15NSS-FNS4-4-S	FNS4	0.203 (5.2)	2.00 (50.8)	1.00 (25.4)		1.41 (35.8)		2.62 (66.6)	3.00 (76.2)	0.75 (19.1)	0.22 (5.6)	5.51 (140.0)	0.62 (15.8)	0.38 (9.7)	0.75 (19.1)
15NSS-FRT4-4-S	FRT4														
15NSS-FNS6-4-S	FNS6	0.219 (5.56)	2.50 (63.5)	1.25 (31.8)		1.41 (35.8)		2.62 (66.6)	3.00 (76.2)	0.75 (19.1)	0.22 (5.6)	5.47 (138.9)	0.62 (15.8)	0.38 (9.7)	1.00 (25.4)
15NSS-FRT6-4-S	FRT6														
15NSS-FNS8-4-S	FNS8	0.312 (7.92)	3.00 (76.2)	1.50 (38.1)		2.06 (52.3)		3.62 (92.0)	4.00 (101.6)	1.00 (25.4)	0.34 (8.6)	6.94 (176.2)	0.69 (17.5)	0.50 (12.7)	1.38 (35.1)
15NSS-FRT8-4-S	FRT8														

Ordering Information and Dimensions (Pipe Connection)

15N Series (3-way/1 on pressure)

Ordering Number	Connection	Orifice in. (mm)	Dimensions, in. (mm)												
			A	B	C	D	D1	E	F	G	G1	H	M	N	Thickness
15NSS-FNS2-5-S	FNS2	0.078 (1.98)	1.50 (38.1)	0.75 (19.1)		0.81 (20.6)		1.38 (35.0)	1.75 (44.5)	0.62 (15.8)	0.17 (4.3)	3.13 (79.5)	0.56 (14.2)	0.31 (7.9)	0.63 (15.9)
15NSS-FRT2-5-S	FRT2														
15NSS-FNS4-5-S	FNS4	0.203 (5.2)	2.00 (50.8)	1.00 (25.4)		1.41 (35.8)		2.44 (62.0)	3.00 (76.2)	0.75 (19.1)	0.22 (5.6)	5.33 (135.4)	0.62 (15.8)	0.38 (9.7)	0.75 (19.1)
15NSS-FRT4-5-S	FRT4														
15NSS-FNS6-5-S	FNS6	0.219 (5.56)	2.50 (63.5)	1.25 (31.8)		1.41 (35.8)		2.44 (62.0)	3.00 (76.2)	0.75 (19.1)	0.22 (5.6)	5.34 (135.7)	0.62 (15.8)	0.38 (9.7)	1.00 (25.4)
15NSS-FRT6-5-S	FRT6														
15NSS-FNS8-5-S	FNS8	0.312 (7.92)	3.00 (76.2)	1.50 (38.1)		2.06 (52.3)		3.38 (85.9)	4.00 (101.6)	1.00 (25.4)	0.34 (8.6)	6.69 (169.9)	0.69 (17.5)	0.50 (12.7)	1.38 (35.1)
15NSS-FRT8-5-S	FRT8														

15N Series (3-way/2 stem manifold)

Ordering Number	Connection	Orifice in. (mm)	Dimensions, in. (mm)												
			A	B	C	D	D1	E	F	G	G1	H	M	N	Thickness
15NSS-FNS2-6-S	FNS2	0.078 (1.98)	1.50 (38.1)	0.75 (19.1)		1.00 (25.6)	0.68 (17.2)	2.02 (51.2)	1.75 (44.5)	0.62 (15.8)	0.17 (4.3)	3.77 (95.8)	0.56 (14.2)	0.31 (7.9)	0.63 (15.9)
15NSS-FRT2-6-S	FRT2														
15NSS-FNS4-6-S	FNS4	0.203 (5.2)	2.00 (50.8)	1.00 (25.4)		1.69 (42.9)	1.19 (30.2)	3.38 (85.9)	3.00 (76.2)	0.75 (19.1)	0.22 (5.6)	6.27 (159.2)	0.62 (15.8)	0.38 (9.7)	0.75 (19.1)
15NSS-FRT4-6-S	FRT4														
15NSS-FNS6-6-S	FNS6	0.219 (5.56)	2.50 (63.5)	1.25 (31.8)		1.69 (42.9)	1.19 (30.2)	3.38 (85.9)	3.00 (76.2)	0.75 (19.1)	0.22 (5.6)	6.22 (158.1)	0.62 (15.8)	0.38 (9.7)	1.00 (25.4)
15NSS-FRT6-6-S	FRT6														
15NSS-FNS8-6-S	FNS8	0.312 (7.92)	3.00 (76.2)	1.50 (38.1)		2.56 (65.1)	1.75 (44.5)	5.12 (130.1)	4.00 (101.6)	1.00 (25.4)	0.34 (8.6)	8.43 (214.2)	0.69 (17.5)	0.50 (12.7)	1.38 (35.1)
15NSS-FRT8-6-S	FRT8														

Notes: 1. G is the drill dimension of packing gland mounting hole.
2. G1 is the dimension of bracket mounting hole.
3. Panel mounting drill size: 0.25" all valves.
4. H is the dimension of stem in closed position.
5. All dimensions are for reference only and subject to change. For dimensions not shown above, please contact FITOK Group or our authorized distributors.

Ordering Information and Dimensions (Tubing Connection)

Straight

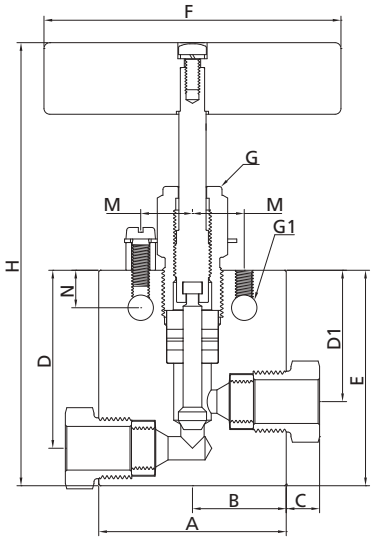

Angle

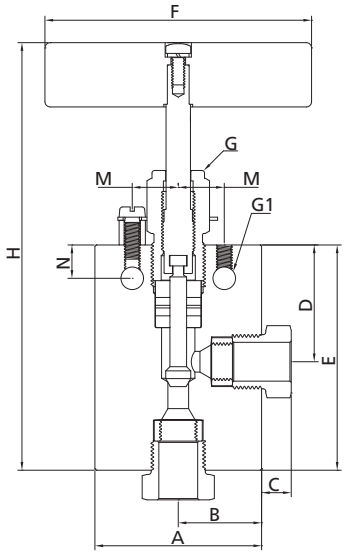

Angle (replaceable seat)

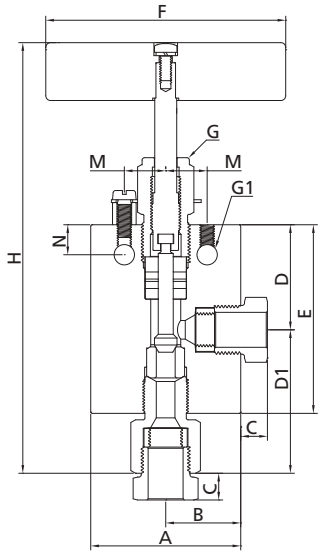

3-way/2 on pressure

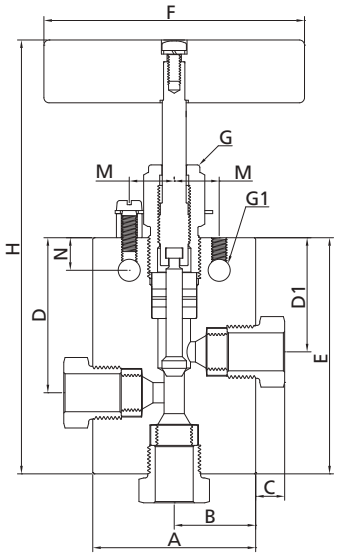

3-way/1 on pressure

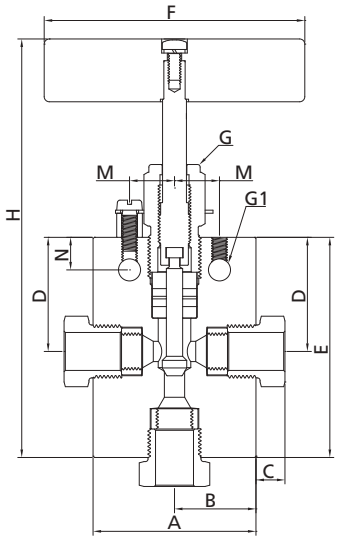

3-way/2 stem manifold

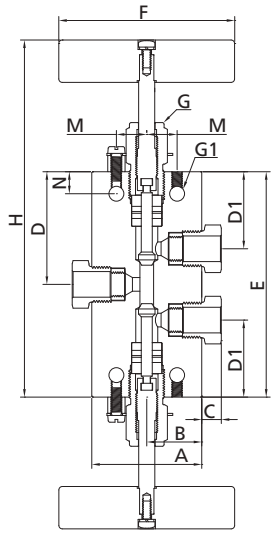

Ordering Information and Dimensions (Tubing Connection)

20N Series (Straight)

Ordering Number	Connection	Orifice in. (mm)	Dimensions, in. (mm)												
			A	B	C	D	D1	E	F	G	G1	H	M	N	Thickness
20NSS-MF4-1-S	MF4	0.125 (3.18)	2.00 (50.8)	1.00 (25.4)	0.38 (9.7)	1.62 (41.2)	1.19 (30.2)	2.00 (50.8)	3.00 (76.2)	0.75 (19.1)	0.22 (5.6)	4.85 (123.1)	0.62 (15.8)	0.38 (9.7)	0.75 (19.1)
20NSS-MF6-1-S	MF6	0.204 (5.18)	2.00 (50.8)	1.00 (25.4)	0.44 (11.2)	1.62 (41.2)	1.19 (30.2)	2.00 (50.8)	3.00 (76.2)	0.75 (19.1)	0.22 (5.6)	4.89 (124.2)	0.62 (15.8)	0.38 (9.7)	0.75 (19.1)
20NSS-MF9-1-S	MF9	0.312 (7.92)	2.50 (63.5)	1.25 (31.8)	0.55 (14.0)	2.37 (60.3)	1.75 (44.5)	2.88 (73.2)	4.00 (101.6)	1.00 (25.4)	0.34 (8.6)	6.18 (157.2)	0.69 (17.5)	0.50 (12.7)	1.00 (25.4)
20NSS-MF12-1-S	MF12	0.438 (11.13)	3.00 (76.2)	1.50 (38.1)	0.60 (15.2)	3.00 (76.2)	2.25 (57.2)	3.75 (95.3)	10.25 (260.4)	1.19 (30.2)	0.44 (11.2)	7.37 (187.2)	0.88 (22.4)	0.63 (16.0)	1.38 (35.1)
20NSS-MF16-1-S	MF16	0.562 (14.27)	4.12 (104.6)	2.06 (52.3)	0.74 (18.7)	3.75 (95.3)	2.81 (71.4)	4.63 (117.6)	10.25 (260.4)	1.62 (41.2)	0.56 (14.2)	9.45 (240.1)	1.25 (31.8)	1.13 (28.7)	1.75 (44.5)

20N Series (Angle)

Ordering Number	Connection	Orifice in. (mm)	Dimensions, in. (mm)												
			A	B	C	D	D1	E	F	G	G1	H	M	N	Thickness
20NSS-MF4-2-S	MF4	0.125 (3.18)	2.00 (50.8)	1.00 (25.4)	0.38 (9.7)	1.19 (30.2)		2.44 (61.9)	3.00 (76.2)	0.75 (19.1)	0.22 (5.6)	5.28 (134.2)	0.62 (15.8)	0.38 (9.7)	0.75 (19.1)
20NSS-MF6-2-S	MF6	0.204 (5.18)	2.00 (50.8)	1.00 (25.4)	0.44 (11.2)	1.19 (30.2)		2.44 (61.9)	3.00 (76.2)	0.75 (19.1)	0.22 (5.6)	5.33 (135.4)	0.62 (15.8)	0.38 (9.7)	0.75 (19.1)
20NSS-MF9-2-S	MF9	0.312 (7.92)	2.50 (63.5)	1.25 (31.8)	0.55 (14.0)	1.75 (44.5)		3.38 (85.9)	4.00 (101.6)	1.00 (25.4)	0.34 (8.6)	6.69 (170.0)	0.69 (17.5)	0.50 (12.7)	1.00 (25.4)
20NSS-MF12-2-S	MF12	0.438 (11.13)	3.00 (76.2)	1.50 (38.1)	0.60 (15.2)	2.25 (57.2)		4.25 (108.0)	10.25 (260.4)	1.19 (30.2)	0.44 (11.2)	7.87 (199.9)	0.88 (22.4)	0.63 (16.0)	1.38 (35.1)
20NSS-MF16-2-S	MF16	0.562 (14.27)	4.12 (104.6)	2.06 (52.3)	0.74 (18.7)	2.81 (71.4)		5.12 (130.1)	10.25 (260.4)	1.62 (41.2)	0.56 (14.2)	9.94 (252.6)	1.25 (31.8)	1.13 (28.7)	1.75 (44.5)

20N Series (Angle/replaceable seat)

Ordering Number	Connection	Orifice in. (mm)	Dimensions, in. (mm)												
			A	B	C	D	D1	E	F	G	G1	H	M	N	Thickness
20NSS-MF4-3-S	MF4	0.125 (3.18)	2.00 (50.8)	1.00 (25.4)	0.38 (9.7)	1.19 (30.2)	2.13 (54.0)	2.25 (57.2)	3.00 (76.2)	0.75 (19.1)	0.22 (5.6)	6.10 (154.9)	0.62 (15.8)	0.38 (9.7)	0.75 (19.1)
20NSS-MF6-3-S	MF6	0.204 (5.18)	2.00 (50.8)	1.00 (25.4)	0.44 (11.2)	1.19 (30.2)	2.13 (54.0)	2.25 (57.2)	3.00 (76.2)	0.75 (19.1)	0.22 (5.6)	6.16 (156.5)	0.62 (15.8)	0.38 (9.7)	0.75 (19.1)
20NSS-MF9-3-S	MF9	0.312 (7.92)	2.50 (63.5)	1.25 (31.8)	0.55 (14.0)	1.75 (44.5)	2.50 (63.5)	3.13 (79.4)	4.00 (101.6)	1.00 (25.4)	0.34 (8.6)	7.58 (192.1)	0.69 (17.5)	0.50 (12.7)	1.00 (25.4)
20NSS-MF12-3-S	MF12	0.438 (11.13)	3.00 (76.2)	1.50 (38.1)	0.60 (15.2)	2.25 (57.2)	3.44 (87.4)	4.25 (108.0)	10.25 (260.4)	1.19 (30.2)	0.44 (11.2)	9.30 (236.3)	0.88 (22.4)	0.63 (16.0)	1.38 (35.1)
20NSS-MF16-3-S	MF16	0.562 (14.27)	4.12 (104.6)	2.06 (52.3)	0.74 (18.7)	2.81 (71.4)	4.22 (107.4)	5.25 (133.4)	10.25 (260.4)	1.62 (41.2)	0.56 (14.2)	11.86 (301.3)	1.25 (31.8)	1.13 (28.7)	1.75 (44.5)

Ordering Information and Dimensions (Tubing Connection)

20N Series (3-way/2 on pressure)

Ordering Number	Connection	Orifice in. (mm)	Dimensions, in. (mm)												
			A	B	C	D	D1	E	F	G	G1	H	M	N	Thickness
20NSS-MF4-4-S	MF4	0.125 (3.18)	2.00 (50.8)	1.00 (25.4)	0.38 (9.7)	1.63 (41.3)	1.19 (30.2)	2.63 (66.7)	3.00 (76.2)	0.75 (19.1)	0.22 (5.6)	5.47 (139.0)	0.62 (15.8)	0.38 (9.7)	0.75 (19.1)
20NSS-MF6-4-S	MF6	0.204 (5.18)	2.00 (50.8)	1.00 (25.4)	0.44 (11.2)	1.63 (41.3)	1.19 (30.2)	2.63 (66.7)	3.00 (76.2)	0.75 (19.1)	0.22 (5.6)	5.52 (140.1)	0.62 (15.8)	0.38 (9.7)	0.75 (19.1)
20NSS-MF9-4-S	MF9	0.312 (7.92)	2.50 (63.5)	1.25 (31.8)	0.55 (14.0)	2.37 (60.3)	1.75 (44.5)	3.63 (92.1)	4.00 (101.6)	1.00 (25.4)	0.34 (8.6)	6.94 (176.3)	0.69 (17.5)	0.50 (12.7)	1.00 (25.4)
20NSS-MF12-4-S	MF12	0.438 (11.13)	3.00 (76.2)	1.50 (38.1)	0.60 (15.2)	3.00 (76.2)	2.25 (57.2)	4.63 (117.5)	10.25 (260.4)	1.19 (30.2)	0.44 (11.2)	8.24 (209.4)	0.88 (22.4)	0.63 (16.0)	1.38 (35.1)
20NSS-MF16-4-S	MF16	0.562 (14.27)	4.12 (104.6)	2.06 (52.3)	0.74 (18.7)	3.75 (95.3)	2.81 (71.4)	5.88 (149.4)	10.25 (260.4)	1.62 (41.2)	0.56 (14.2)	10.70 (271.9)	1.25 (31.8)	1.13 (28.7)	1.75 (44.5)

20N Series (3-way/1 on pressure)

Ordering Number	Connection	Orifice in. (mm)	Dimensions, in. (mm)												
			A	B	C	D	D1	E	F	G	G1	H	M	N	Thickness
20NSS-MF4-5-S	MF4	0.125 (3.18)	2.00 (50.8)	1.00 (25.4)	0.38 (9.7)	1.19 (30.2)		2.44 (61.9)	3.00 (76.2)	0.75 (19.1)	0.22 (5.6)	5.28 (134.2)	0.62 (15.8)	0.38 (9.7)	0.75 (19.1)
20NSS-MF6-5-S	MF6	0.204 (5.18)	2.00 (50.8)	1.00 (25.4)	0.44 (11.2)	1.19 (30.2)		2.44 (61.9)	3.00 (76.2)	0.75 (19.1)	0.22 (5.6)	5.33 (135.4)	0.62 (15.8)	0.38 (9.7)	0.75 (19.1)
20NSS-MF9-5-S	MF9	0.312 (7.92)	2.50 (63.5)	1.25 (31.8)	0.55 (14.0)	1.75 (44.5)		3.38 (85.9)	4.00 (101.6)	1.00 (25.4)	0.34 (8.6)	6.69 (170.0)	0.69 (17.5)	0.50 (12.7)	1.00 (25.4)
20NSS-MF12-5-S	MF12	0.438 (11.13)	3.00 (76.2)	1.50 (38.1)	0.60 (15.2)	2.25 (57.2)		4.25 (108.0)	10.25 (260.4)	1.19 (30.2)	0.44 (11.2)	7.87 (199.9)	0.88 (22.4)	0.63 (16.0)	1.38 (35.1)
20NSS-MF16-5-S	MF16	0.562 (14.27)	4.12 (104.6)	2.06 (52.3)	0.74 (18.7)	2.81 (71.4)		5.12 (130.1)	10.25 (260.4)	1.62 (41.2)	0.56 (14.2)	9.94 (252.6)	1.25 (31.8)	1.13 (28.7)	1.75 (44.5)

20N Series (3-way/2 stem manifold)

Ordering Number	Connection	Orifice in. (mm)	Dimensions, in. (mm)												
			A	B	C	D	D1	E	F	G	G1	H	M	N	Thickness
20NSS-MF4-6-S	MF4	0.125 (3.18)	2.00 (50.8)	1.00 (25.4)	0.38 (9.7)	1.69 (42.9)	1.19 (30.2)	3.38 (85.7)	3.00 (76.2)	0.75 (19.1)	0.22 (5.6)	6.23 (158.1)	0.62 (15.8)	0.38 (9.7)	0.75 (19.1)
20NSS-MF6-6-S	MF6	0.204 (5.18)	2.00 (50.8)	1.00 (25.4)	0.44 (11.2)	1.69 (42.9)	1.19 (30.2)	3.38 (85.7)	3.00 (76.2)	0.75 (19.1)	0.22 (5.6)	6.24 (158.6)	0.62 (15.8)	0.38 (9.7)	0.75 (19.1)
20NSS-MF9-6-S	MF9	0.312 (7.92)	2.50 (63.5)	1.25 (31.8)	0.55 (14.0)	2.56 (65.1)	1.75 (44.5)	5.13 (130.2)	4.00 (101.6)	1.00 (25.4)	0.34 (8.6)	8.44 (214.4)	0.69 (17.5)	0.50 (12.7)	1.00 (25.4)
20NSS-MF12-6-S	MF12	0.438 (11.13)	3.00 (76.2)	1.50 (38.1)	0.60 (15.2)	3.00 (76.2)	2.25 (57.2)	6.50 (165.1)	10.25 (260.4)	1.19 (30.2)	0.44 (11.2)	10.11 (257.0)	0.88 (22.4)	0.63 (16.0)	1.38 (35.1)
20NSS-MF16-6-S	MF16	0.562 (14.27)	4.12 (104.6)	2.06 (52.3)	0.74 (18.7)	3.75 (95.3)	2.81 (71.4)	7.50 (190.5)	10.25 (260.4)	1.62 (41.2)	0.56 (14.2)	12.32 (313.0)	1.25 (31.8)	1.13 (28.7)	1.75 (44.5)

Ordering Information and Dimensions (Tubing Connection)

30N Series (Straight)

Ordering Number	Connection	Orifice in. (mm)	Dimensions, in. (mm)												
			A	B	C	D	D1	E	F	G	G1	H	M	N	Thickness
30NSS-HF4-1-S	HF4	0.094 (2.39)	2.00 (50.8)	1.00 (25.4)	0.47 (11.9)	1.50 (38.1)	1.12 (28.5)	2.00 (50.8)	3.00 (76.2)	1.00 (25.4)	0.22 (5.6)	4.69 (119.1)	0.69 (17.5)	0.38 (9.7)	1.00 (25.4)
30NSS-HF6-1-S	HF6	0.125 (3.18)	2.00 (50.8)	1.00 (25.4)	0.61 (15.6)	1.50 (38.1)	1.12 (28.5)	2.00 (50.8)	3.00 (76.2)	1.00 (25.4)	0.22 (5.6)	4.69 (119.1)	0.69 (17.5)	0.38 (9.7)	1.00 (25.4)
30NSS-HF9-1-S	HF9	0.125 (3.18)	2.62 (66.6)	1.31 (33.3)	0.95 (24.1)	1.56 (39.6)	1.12 (28.5)	2.44 (62.0)	3.00 (76.2)	1.00 (25.4)	0.28 (7.1)	5.13 (130.3)	0.69 (17.5)	0.38 (9.7)	1.50 (38.1)

30N Series (Angle)

Ordering Number	Connection	Orifice in. (mm)	Dimensions, in. (mm)												
			A	B	C	D	D1	E	F	G	G1	H	M	N	Thickness
30NSS-HF4-2-S	HF4	0.094 (2.39)	2.00 (50.8)	1.00 (25.4)	0.47 (11.9)	1.12 (28.5)		2.00 (50.8)	3.00 (76.2)	1.00 (25.4)	0.22 (5.6)	4.69 (119.1)	0.69 (17.5)	0.38 (9.7)	1.00 (25.4)
30NSS-HF6-2-S	HF6	0.125 (3.18)	2.00 (50.8)	1.00 (25.4)	0.61 (15.6)	1.12 (28.5)		2.25 (57.2)	3.00 (76.2)	1.00 (25.4)	0.22 (5.6)	4.95 (125.7)	0.69 (17.5)	0.38 (9.7)	1.00 (25.4)
30NSS-HF9-2-S	HF9	0.125 (3.18)	2.62 (66.6)	1.31 (33.3)	0.95 (24.1)	1.12 (28.5)		2.44 (62.0)	3.00 (76.2)	1.00 (25.4)	0.28 (7.1)	5.13 (130.3)	0.69 (17.5)	0.38 (9.7)	1.50 (38.1)

30N Series (Angle/replaceable seat)

Ordering Number	Connection	Orifice in. (mm)	Dimensions, in. (mm)												
			A	B	C	D	D1	E	F	G	G1	H	M	N	Thickness
30NSS-HF4-3-S	HF4	0.094 (2.39)	2.00 (50.8)	1.00 (25.4)	0.47 (11.9)	1.12 (28.5)	2.06 (52.3)	2.38 (60.5)	3.00 (76.2)	1.00 (25.4)	0.22 (5.6)	5.88 (149.2)	0.69 (17.5)	0.38 (9.7)	1.00 (25.4)
30NSS-HF6-3-S	HF6	0.125 (3.18)	2.00 (50.8)	1.00 (25.4)	0.61 (15.6)	1.12 (28.5)	2.31 (58.67)	2.38 (60.5)	3.00 (76.2)	1.00 (25.4)	0.22 (5.6)	6.12 (155.4)	0.69 (17.5)	0.38 (9.7)	1.00 (25.4)
30NSS-HF9-3-S	HF9	0.125 (3.18)	2.62 (66.6)	1.31 (33.3)	0.95 (24.1)	1.12 (28.6)	2.57 (65.3)	2.46 (62.4)	3.00 (76.2)	1.00 (25.4)	0.28 (7.1)	6.39 (162.4)	0.69 (17.5)	0.38 (9.7)	1.50 (38.1)

30N Series (3-way/2 on pressure)

Ordering Number	Connection	Orifice in. (mm)	Dimensions, in. (mm)												
			A	B	C	D	D1	E	F	G	G1	H	M	N	Thickness
30NSS-HF4-4-S	HF4	0.094 (2.39)	2.00 (50.8)	1.00 (25.4)	0.47 (11.9)	1.50 (38.1)	1.12 (28.5)	2.12 (53.9)	3.00 (76.2)	1.00 (25.4)	0.22 (5.6)	4.81 (122.1)	0.69 (17.5)	0.38 (9.7)	1.00 (25.4)
30NSS-HF6-4-S	HF6	0.125 (3.18)	2.00 (50.8)	1.00 (25.4)	0.61 (15.6)	1.50 (38.1)	1.12 (28.5)	2.50 (63.5)	3.00 (76.2)	1.00 (25.4)	0.22 (5.6)	5.19 (131.9)	0.69 (17.5)	0.38 (9.7)	1.00 (25.4)
30NSS-HF9-4-S	HF9	0.125 (3.18)	2.62 (66.6)	1.31 (33.3)	0.95 (24.1)	1.56 (39.6)	1.12 (28.5)	2.88 (73.2)	3.00 (76.2)	1.00 (25.4)	0.28 (7.1)	5.57 (141.5)	0.69 (17.5)	0.38 (9.7)	1.50 (38.1)

Ordering Information and Dimensions (Tubing Connection)

30N Series (3-way/1 on pressure)

Ordering Number	Connection	Orifice in. (mm)	Dimensions, in. (mm)												
			A	B	C	D	D1	E	F	G	G1	H	M	N	Thickness
30NSS-HF4-5-S	HF4	0.094 (2.39)	2.00 (50.8)	1.00 (25.4)	0.47 (11.9)	1.12 (28.5)		2.00 (50.8)	3.00 (76.2)	1.00 (25.4)	0.22 (5.6)	4.69 (119.1)	0.69 (17.5)	0.38 (9.7)	1.00 (25.4)
30NSS-HF6-5-S	HF6	0.125 (3.18)	2.00 (50.8)	1.00 (25.4)	0.61 (15.6)	1.12 (28.5)		2.25 (57.2)	3.00 (76.2)	1.00 (25.4)	0.22 (5.6)	4.95 (125.7)	0.69 (17.5)	0.38 (9.7)	1.00 (25.4)
30NSS-HF9-5-S	HF9	0.125 (3.18)	2.62 (66.6)	1.31 (33.3)	0.95 (24.1)	1.12 (28.5)		2.44 (62.0)	3.00 (76.2)	1.00 (25.4)	0.28 (7.1)	5.13 (130.3)	0.69 (17.5)	0.38 (9.7)	1.50 (38.1)

30N Series (3-way/2 stem manifold)

Ordering Number	Connection	Orifice in. (mm)	Dimensions, in. (mm)												
			A	B	C	D	D1	E	F	G	G1	H	M	N	Thickness
30NSS-HF4-6-S	HF4	0.094 (2.39)	2.00 (50.8)	1.00 (25.4)	0.47 (11.9)	1.53 (38.9)	1.12 (28.5)	3.06 (77.7)	3.00 (76.2)	1.00 (25.4)	0.22 (5.6)	5.75 (146.0)	0.69 (17.5)	0.38 (9.7)	1.00 (25.4)
30NSS-HF6-6-S	HF6	0.125 (3.18)	2.00 (50.8)	1.00 (25.4)	0.61 (15.6)	1.62 (41.2)	1.12 (28.5)	3.25 (82.6)	3.00 (76.2)	1.00 (25.4)	0.22 (5.6)	5.94 (150.9)	0.69 (17.5)	0.38 (9.7)	1.00 (25.4)
30NSS-HF9-6-S	HF9	0.125 (3.18)	2.62 (66.6)	1.31 (33.3)	0.95 (24.1)	1.88 (47.8)	1.12 (28.5)	3.75 (95.3)	3.00 (76.2)	1.00 (25.4)	0.28 (7.1)	6.44 (163.6)	0.69 (17.5)	0.38 (9.7)	1.50 (38.1)

60N Series (Straight)

Ordering Number	Connection	Orifice in. (mm)	Dimensions, in. (mm)												
			A	B	C	D	D1	E	F	G	G1	H	M	N	Thickness
60NSS-HF4-TG1-S	HF4	0.063 (1.59)	2.00 (50.8)	1.00 (25.4)	0.47 (11.9)	1.69 (42.9)	1.31 (33.3)	2.13 (54.0)	3.00 (76.2)	1.00 (25.4)	0.22 (5.6)	4.77 (121.1)	0.69 (17.5)	0.38 (9.7)	1.00 (25.4)
60NSS-HF6-TG1-S	HF6	0.063 (1.59)	2.00 (50.8)	1.00 (25.4)	0.61 (15.6)	1.69 (42.9)	1.31 (33.3)	2.25 (57.2)	3.00 (76.2)	1.00 (25.4)	0.22 (5.6)	4.89 (124.3)	0.69 (17.5)	0.38 (9.7)	1.00 (25.4)
60NSS-HF9-TG1-S	HF9	0.078 (1.98)	2.62 (66.6)	1.31 (33.3)	0.95 (24.1)	1.75 (44.5)	1.31 (33.3)	2.50 (63.5)	3.00 (76.2)	1.00 (25.4)	0.28 (7.1)	5.14 (130.6)	0.69 (17.5)	0.38 (9.7)	1.50 (38.1)

60N Series (Angle)

Ordering Number	Connection	Orifice in. (mm)	Dimensions, in. (mm)												
			A	B	C	D	D1	E	F	G	G1	H	M	N	Thickness
60NSS-HF4-TG2-S	HF4	0.063 (1.59)	2.00 (50.8)	1.00 (25.4)	0.47 (11.9)	1.31 (33.3)		2.38 (60.5)	3.00 (76.2)	1.00 (25.4)	0.22 (5.6)	5.02 (127.5)	0.69 (17.5)	0.38 (9.7)	1.00 (25.4)
60NSS-HF6-TG2-S	HF6	0.063 (1.59)	2.00 (50.8)	1.00 (25.4)	0.61 (15.6)	1.31 (33.3)		2.62 (66.6)	3.00 (76.2)	1.00 (25.4)	0.22 (5.6)	5.26 (133.5)	0.69 (17.5)	0.38 (9.7)	1.00 (25.4)
60NSS-HF9-TG2-S	HF9	0.078 (1.98)	2.62 (66.6)	1.31 (33.3)	0.95 (24.1)	1.31 (33.3)		2.81 (71.4)	3.00 (76.2)	1.00 (25.4)	0.28 (7.1)	5.45 (138.5)	0.69 (17.5)	0.38 (9.7)	1.50 (38.1)

Ordering Information and Dimensions (Tubing Connection)

60N Series (Angle/replaceable seat)

Ordering Number	Connection	Orifice in. (mm)	Dimensions, in. (mm)												
			A	B	C	D	D1	E	F	G	G1	H	M	N	Thickness
60NSS-HF4-TG3-S	HF4	0.063 (1.59)	2.00 (50.8)	1.00 (25.4)	0.47 (11.9)	1.31 (33.3)	2.12 (53.9)	2.62 (66.6)	3.00 (76.2)	1.00 (25.4)	0.22 (5.6)	6.07 (154.1)	0.69 (17.5)	0.38 (9.7)	1.00 (25.4)
60NSS-HF6-TG3-S	HF6	0.063 (1.59)	2.00 (50.8)	1.00 (25.4)	0.61 (15.6)	1.31 (33.3)	2.36 (59.9)	2.62 (66.6)	3.00 (76.2)	1.00 (25.4)	0.22 (5.6)	6.30 (160.1)	0.69 (17.5)	0.38 (9.7)	1.00 (25.4)
60NSS-HF9-TG3-S	HF9	0.078 (1.98)	2.62 (66.6)	1.31 (33.3)	0.95 (24.1)	1.31 (33.3)	2.68 (68.8)	2.62 (66.6)	3.00 (76.2)	1.00 (25.4)	0.28 (7.1)	6.65 (168.9)	0.69 (17.5)	0.38 (9.7)	1.50 (38.1)

60N Series (3-way/2 on pressure)

Ordering Number	Connection	Orifice in. (mm)	Dimensions, in. (mm)												
			A	B	C	D	D1	E	F	G	G1	H	M	N	Thickness
60NSS-HF4-TG4-S	HF4	0.063 (1.59)	2.00 (50.8)	1.00 (25.4)	0.47 (11.9)	1.69 (42.9)	1.31 (33.3)	2.38 (60.5)	3.00 (76.2)	1.00 (25.4)	0.22 (5.6)	5.26 (133.6)	0.69 (17.5)	0.38 (9.7)	1.00 (25.4)
60NSS-HF6-TG4-S	HF6	0.063 (1.59)	2.00 (50.8)	1.00 (25.4)	0.61 (15.6)	1.69 (42.9)	1.31 (33.3)	2.75 (68.9)	3.00 (76.2)	1.00 (25.4)	0.22 (5.6)	5.34 (135.8)	0.69 (17.5)	0.38 (9.7)	1.00 (25.4)
60NSS-HF9-TG4-S	HF9	0.078 (1.98)	2.62 (66.6)	1.31 (33.3)	0.95 (24.1)	1.75 (44.5)	1.31 (33.3)	3.03 (77.0)	3.00 (76.2)	1.00 (25.4)	0.28 (7.1)	5.67 (143.9)	0.69 (17.5)	0.38 (9.7)	1.50 (38.1)

60N Series (3-way/1 on pressure)

Ordering Number	Connection	Orifice in. (mm)	Dimensions, in. (mm)												
			A	B	C	D	D1	E	F	G	G1	H	M	N	Thickness
60NSS-HF4-TG5-S	HF4	0.063 (1.59)	2.00 (50.8)	1.00 (25.4)	0.47 (11.9)	1.31 (33.3)		2.38 (60.5)	3.00 (76.2)	1.00 (25.4)	0.22 (5.6)	5.02 (127.5)	0.69 (17.5)	0.38 (9.7)	1.00 (25.4)
60NSS-HF6-TG5-S	HF6	0.063 (1.59)	2.00 (50.8)	1.00 (25.4)	0.61 (15.6)	1.31 (33.3)		2.62 (66.6)	3.00 (76.2)	1.00 (25.4)	0.22 (5.6)	5.26 (133.5)	0.69 (17.5)	0.38 (9.7)	1.00 (25.4)
60NSS-HF9-TG5-S	HF9	0.078 (1.98)	2.62 (66.6)	1.31 (33.3)	0.95 (24.1)	1.31 (33.3)		2.81 (71.4)	3.00 (76.2)	1.00 (25.4)	0.28 (7.1)	5.45 (138.5)	0.69 (17.5)	0.38 (9.7)	1.50 (38.1)

60N Series (3-way/2 stem manifold)

Ordering Number	Connection	Orifice in. (mm)	Dimensions, in. (mm)												
			A	B	C	D	D1	E	F	G	G1	H	M	N	Thickness
60NSS-HF4-TG6-S	HF4	0.063 (1.59)	2.00 (50.8)	1.00 (25.4)	0.47 (11.9)	1.72 (43.69)	1.31 (33.3)	3.44 (87.4)	3.00 (76.2)	1.00 (25.4)	0.22 (5.6)	6.08 (154.5)	0.69 (17.5)	0.38 (9.7)	1.00 (25.4)
60NSS-HF6-TG6-S	HF6	0.063 (1.59)	2.00 (50.8)	1.00 (25.4)	0.61 (15.6)	1.88 (47.8)	1.31 (33.3)	3.75 (95.3)	3.00 (76.2)	1.00 (25.4)	0.22 (5.6)	6.39 (162.3)	0.69 (17.5)	0.38 (9.7)	1.00 (25.4)
60NSS-HF9-TG6-S	HF9	0.078 (1.98)	2.62 (66.6)	1.31 (33.3)	0.95 (24.1)	2.06 (52.3)	1.31 (33.3)	4.12 (104.6)	3.00 (76.2)	1.00 (25.4)	0.28 (7.1)	6.76 (171.8)	0.69 (17.5)	0.38 (9.7)	1.50 (38.1)

Notes: 1. G is the drill dimension of packing gland mounting hole.
2. G1 is the dimension of bracket mounting hole.
3. Panel mounting drill size: 0.25" all valves.
4. H is the dimension of stem in closed position.
5. All dimensions are for reference only and subject to change. For dimensions not shown above, please contact FITOK Group or our authorized distributors.

Ordering Number Description

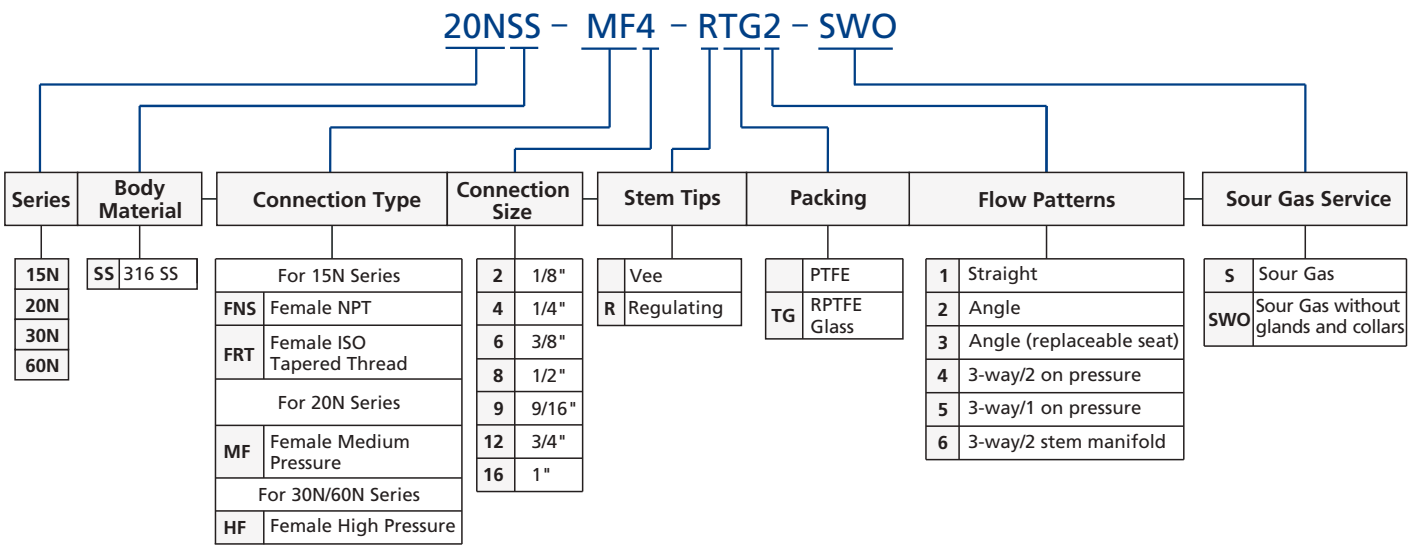

Notes: 1. For more details regarding Medium/High Pressure connections, please see **Connection Information** on A-02.
2. "Ordering Number Description" is a reference to understand the combination rules of FITOK product part number. Not all combinations are available.

Bleed Valves

Working Pressure Up to 20,000 psig (1379 bar)

Features

- One piece hex construction compact design allows easy installation
- Working temperature range: 0°F to 400°F (-17.8°C to 204°C)
- 1/8" Female NPT outlet connection
- Easy to assemble and replace O-ring
- Positive locking screw design prevents accidental removal of the stem
- Tee handle for easy operation

Technical Data

Series	Inlet Connection	Orifice in. (mm)	Working Pressure psig (bar)
20BV	MM6	0.094 (2.4)	10,000 (690)
	MM9	0.094 (2.4)	10,000 (690)
	MCT6	0.094 (2.4)	10,000 (690)
	MCT9	0.094 (2.4)	10,000 (690)
30BV	HM6	0.094 (2.4)	20,000 (1379)
	HM9	0.094 (2.4)	20,000 (1379)
	HCT6	0.094 (2.4)	20,000 (1379)
	HCT9	0.094 (2.4)	20,000 (1379)

Notes: 1. Working pressure shown is in closed position.
2. Working pressure is 10,000 psig (690 bar) in open position.
3. A variety of end connections available on request. For connections not shown above, please contact FITOK Group or our authorized distributors.

Standard Materials of Construction

Item	Component	Material Grade
1	Handle Screw	Stainless Steel
2	Handle	Stainless Steel
3	Locking Screw	Stainless Steel
4	*Body*	*Annealed 316 SS*
5	*Stem*	*Nickel-Based Alloy*
6	*O-Ring*	*FKM*
	Lubricant	Molybdenum Disulfide/Fluorinated-Based

Wetted components listed in italics.

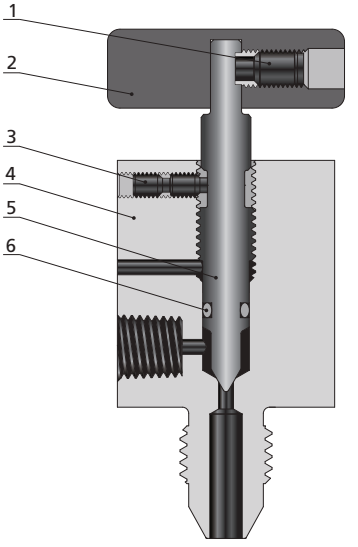

Ordering Information and Dimensions

Type 1

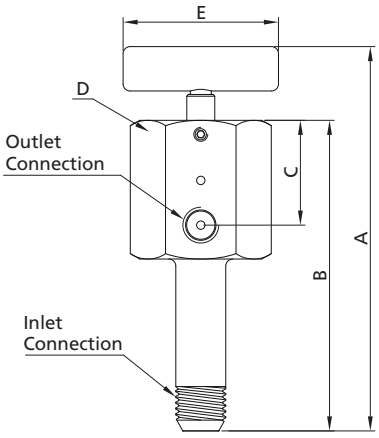

Type 2

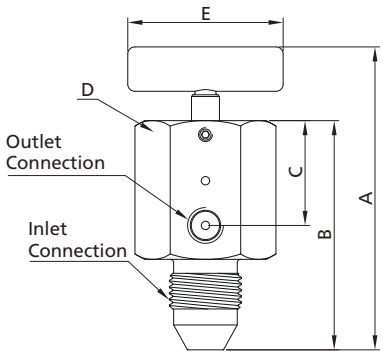

Type 1

Ordering Number	Inlet Connection	Outlet Connection	Orifice in. (mm)	Dimensions, in. (mm)				
				A	B	C	D	E
20BVSS-MCT6-FNS2-S	MCT6	FNS2	0.094 (2.4)	3.61 (91.7)	2.78 (70.5)	1.18 (30.0)	1.37 (34.9)	1.75 (44.5)
20BVSS-MCT9-FNS2-S	MCT9	FNS2	0.094 (2.4)	3.82 (97.0)	2.98 (75.8)	1.18 (30.0)	1.37 (34.9)	1.75 (44.5)
30BVSS-HCT6-FNS2-S	HCT6	FNS2	0.094 (2.4)	4.09 (103.9)	3.26 (82.7)	1.18 (30.0)	1.37 (34.9)	1.75 (44.5)
30BVSS-HCT9-FNS2-S	HCT9	FNS2	0.094 (2.4)	4.68 (118.9)	3.85 (97.7)	1.18 (30.0)	1.37 (34.9)	1.75 (44.5)

Type 2

Ordering Number	Inlet Connection	Outlet Connection	Orifice in. (mm)	Dimensions, in. (mm)				
				A	B	C	D	E
20BVSS-MM6-FNS2-S	MM6	FNS2	0.094 (2.4)	3.23 (82.0)	2.39 (60.8)	1.18 (30.0)	1.37 (34.9)	1.75 (44.5)
20BVSS-MM9-FNS2-S	MM9	FNS2	0.094 (2.4)	3.42 (86.8)	2.58 (65.6)	1.18 (30.0)	1.37 (34.9)	1.75 (44.5)
30BVSS-HM6-FNS2-S	HM6	FNS2	0.094 (2.4)	3.27 (83.1)	2.44 (61.9)	1.18 (30.0)	1.37 (34.9)	1.75 (44.5)
30BVSS-HM9-FNS2-S	HM9	FNS2	0.094 (2.4)	3.44 (87.4)	2.61 (66.2)	1.18 (30.0)	1.37 (34.9)	1.75 (44.5)

Notes: 1. D is the dimension of hex.
2. A is the dimension of stem in closed position.
3. All dimensions are for reference only and are subject to change. For dimensions not shown above, please contact FITOK Group or our authorized distributors.

Ordering Number Description

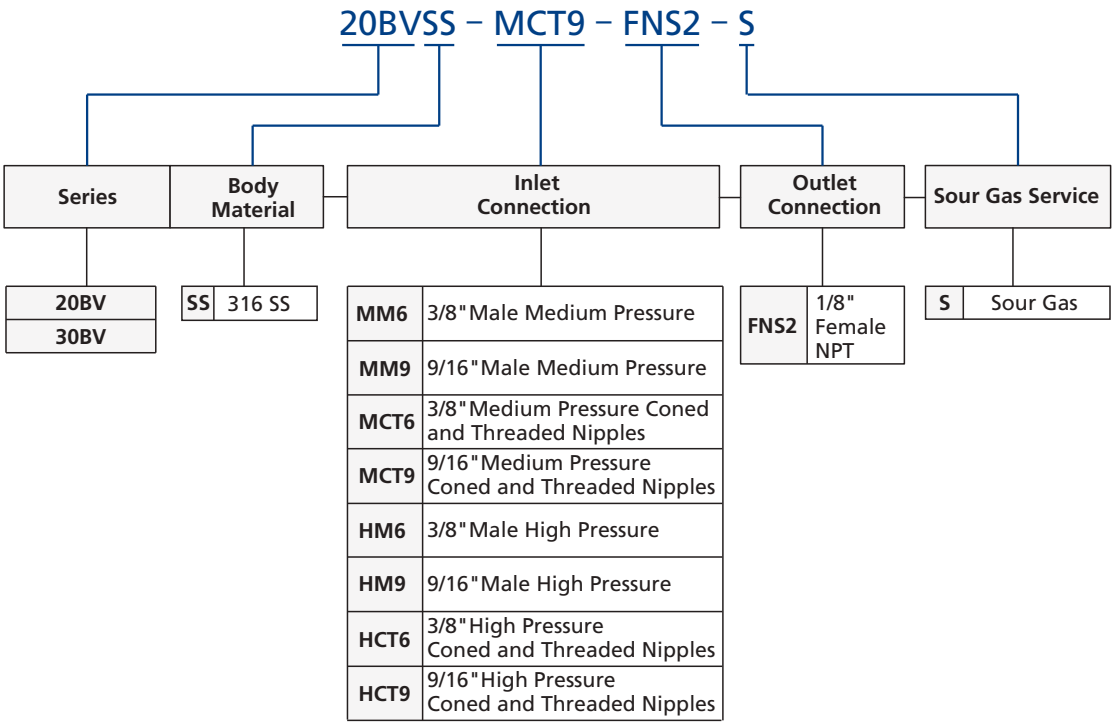

Notes: 1. For more details regarding Medium/High Pressure connections, please see **Connection Information** on A-02.
2. "Ordering Number Description" is a reference to understand the combination rules of FITOK product part number. Not all combinations are available.

Gauge Valves

Working Pressure Up to 20,000 psig (1379 bar)

Features

◎ One inlet, three outlet ports.
◎ Metal-to-metal seating achieves ideal shutoff, longer stem/seat service lifetime for abrasive flow, excellent corrosion resistance and greater durability for repeated on/off cycles
◎ Reliable packing gland locking device

Flow Data at 100°F (38°C)

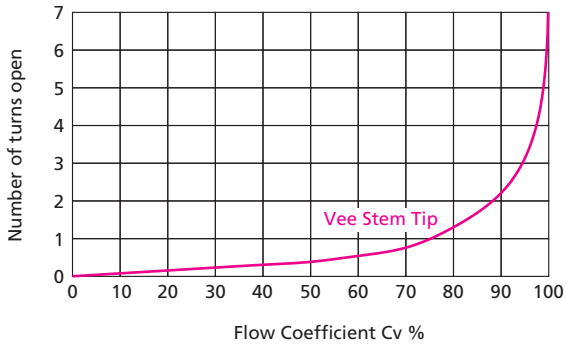

Pressure vs. Temperature Curve

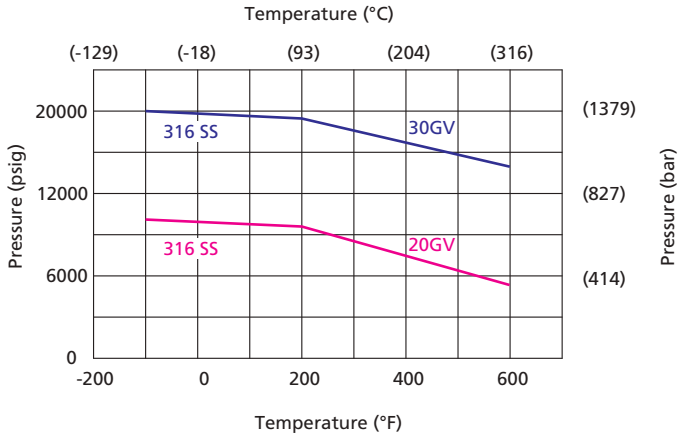

FITOK

Technical Data

Series	Connection	Orifice in. (mm)	Cv	Working Pressure psig (bar)
20GV	MF6	0.125 (3.18)	0.23	10,000 (690)
	MF9	0.125 (3.18)	0.23	10,000 (690)
30GV	HF6	0.125 (3.18)	0.33	20,000 (1379)
	HF9	0.125 (3.18)	0.33	20,000 (1379)

Notes: 1. Packing Options
PTFE is the standard packing material, RPTFE glass also available
PTFE: -100°F~450°F (-73°C~232°C).
RPTFE glass: -100°F~600°F (-73°C~316°C).
2. A variety of end connections are available upon request. For connections not shown above, please contact FITOK Group or our authorized distributors.

Standard Materials of Construction

Item	Component	Material Grade
1	Handle	Stainless Steel
2	Upper Stem	316 SS
3	Packing Gland	316 SS
4	*Lower Stem*	*Nickel-Based Alloy*
5	Packing Ring	316 SS
6	*Packing*	*PTFE/RPTFE*
7	*Packing Washer*	*316 SS*
8	*Body*	*Annealed 316 SS*
	Lubricant	Molybdenum Disulfide

Wetted components listed in italics.

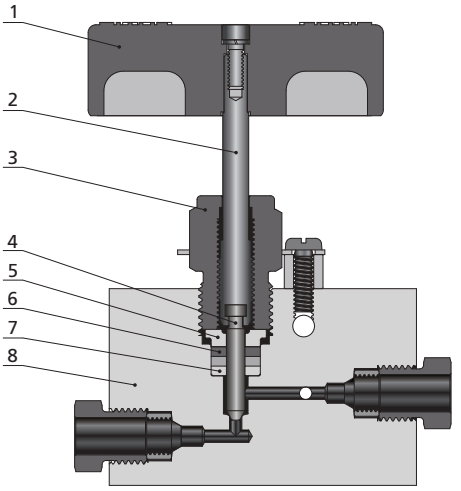

Ordering Information and Dimensions

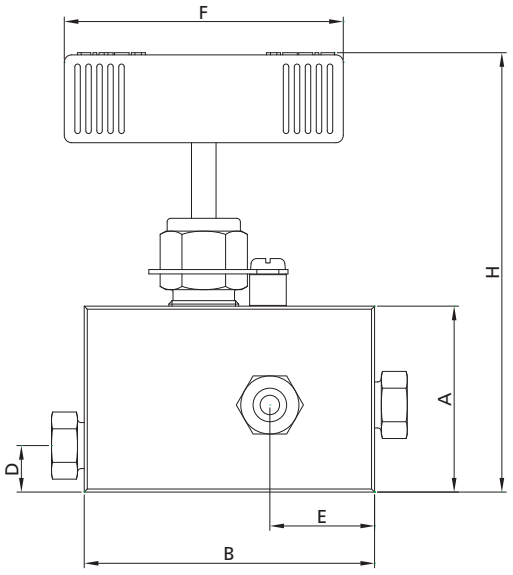

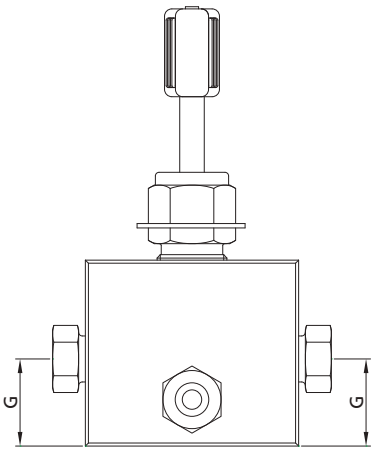

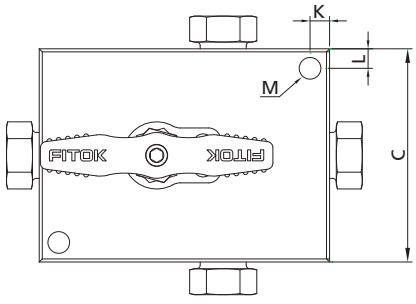

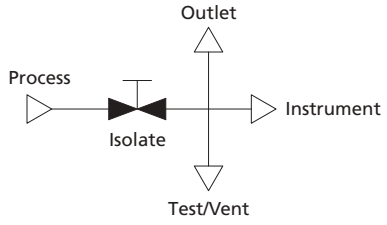

Ordering Number	Connection	Orifice in. (mm)	Dimensions, in. (mm)										
			A	B	C	D	E	F	G	H	K	L	M
20GVSS-MF6-S	MF6	0.125 (3.18)	2.00 (50.8)	3.12 (79.3)	2.00 (50.8)	0.50 (12.7)	1.13 (28.6)	3.00 (76.2)	0.94 (23.8)	4.68 (118.9)	0.38 (9.7)	0.25 (6.4)	0.28 (7.1)
20GVSS-MF9-S	MF9	0.125 (3.18)	2.00 (50.8)	3.88 (98.6)	2.75 (69.9)	0.66 (16.8)	1.38 (34.9)	3.00 (76.2)	0.94 (23.8)	4.68 (118.9)	0.38 (9.7)	0.38 (9.7)	0.28 (7.1)
30GVSS-HF6-S	HF6	0.125 (3.18)	2.00 (50.8)	3.12 (79.3)	2.00 (50.8)	0.50 (12.7)	1.13 (28.6)	3.00 (76.2)	0.94 (23.8)	4.68 (118.9)	0.38 (9.7)	0.38 (9.7)	0.28 (7.1)
30GVSS-HF9-S	HF9	0.125 (3.18)	2.00 (50.8)	3.88 (98.6)	2.75 (69.9)	0.66 (16.8)	1.38 (34.9)	3.00 (76.2)	0.94 (23.8)	4.68 (118.9)	0.38 (9.7)	0.38 (9.7)	0.28 (7.1)

Notes: 1. M is the panel mounting drill size.
2. H is the dimension of stem in closed position.
3. All dimensions are for reference only and are subject to change. For dimensions not shown above, please contact FITOK Group or our authorized distributors.

Ordering Number Description

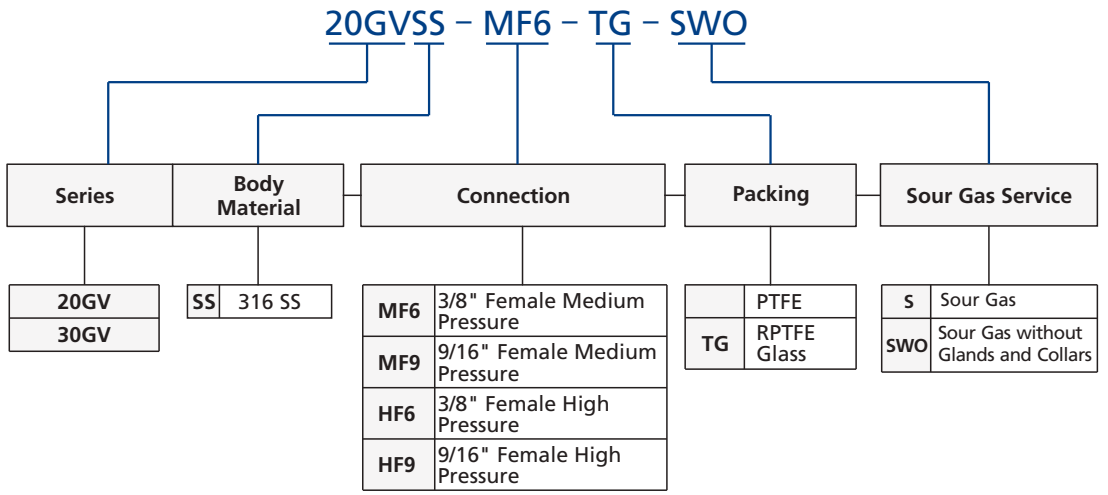

Notes: 1. For more details regarding Medium/High Pressure connections, please see **Connection Information** on A-02.
2. "Ordering Number Description" is a reference to understand the combination rules of FITOK product part number. Not all combinations are available.

Check Valves

Working Pressure Up to 30,000 psig (2068 bar)

Features

(Pipe) O-Ring Check Valves

◎ Provide unidirectional flow and tight shut-off for liquids and gases with high reliability (not for use as relief valve)
◎ Resilient O-ring seat design for noise-free closing and zero leakage
◎ Cracking pressure: 14 psig~26 psig (0.97 bar~1.79 bar)

(Pipe) Ball Check Valves

◎ Prevent reverse flow where leak-tight shut-off is not mandatory (not for use as relief valve)
◎ An integral design of the ball and poppet to assure positive, in-line seating without "chatter". Poppet designed essentially for axial flow with minimum pressure drop

Standard Materials of Construction

15C Series Pipe O-Ring Check Valves

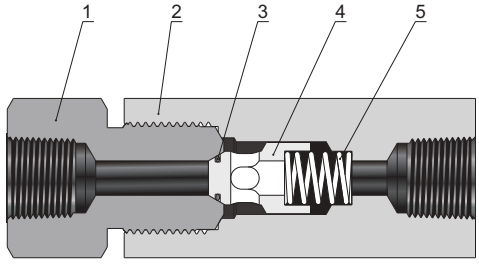

Item	Component	Material Grade
1	*Cover Gland*	*Annealed Stainless Steal*
2	*Valve Body*	*Annealed 316 SS*
3	*O-Ring*	*FKM*
4	*Poppet*	*Annealed 316 SS*
5	*Spring*	*Nickel-Based Alloy*
	Lubricant	Molybdenum Disulfide

15CO Series Pipe Ball Check Valves

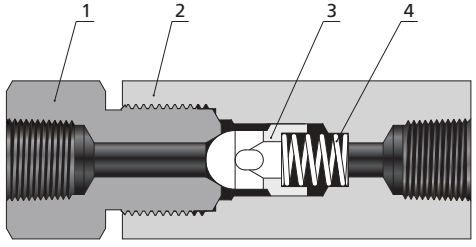

Item	Component	Material Grade
1	*Cover Gland*	*Annealed Stainless Steal*
2	*Valve Body*	*Annealed 316 SS*
3	*Ball Poppet*	*Nickel-Based Alloy*
4	*Spring*	
	Lubricant	Molybdenum Disulfide

20C Series O-Ring Check Valves

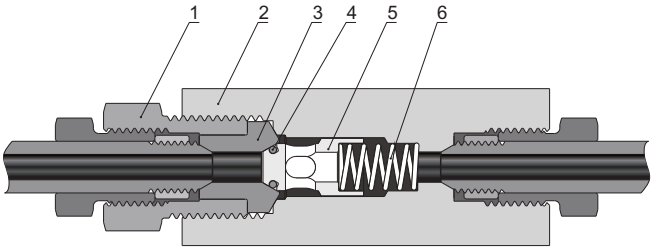

Item	Component	Material Grade
1	Cover Gland	Annealed Stainless Steal
2	*Valve Body*	*Annealed 316 SS*
3	*Cover*	*Annealed 316 SS*
4	*O-Ring*	*FKM*
5	*Poppet*	*Annealed 316 SS*
6	*Spring*	*Nickel-Based Alloy*
	Lubricant	Molybdenum Disulfide

20CO Series Ball Check Valves

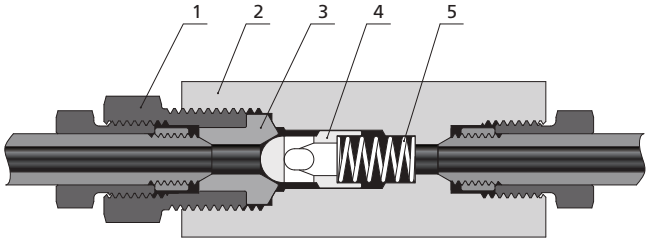

Item	Component	Material Grade
1	Cover Gland	Annealed Stainless Steal
2	*Valve Body*	*Annealed 316 SS*
3	*Cover*	
4	*Ball Poppet*	*Nickel-Based Alloy*
5	*Spring*	
	Lubricant	Molybdenum Disulfide

60C Series O-Ring Check Valves

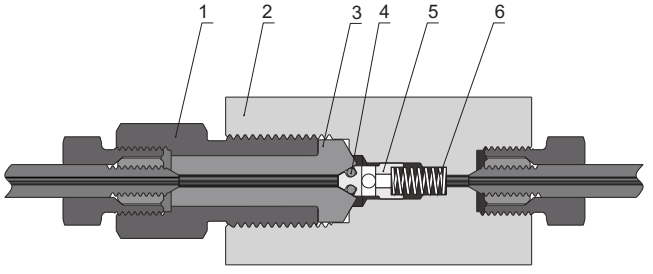

Item	Component	Material Grade
1	Cover Gland	Annealed Stainless Steal
2	*Valve Body*	*Annealed 316 SS*
3	*Cover*	*Annealed 316 SS*
4	*O-Ring*	*FKM*
5	*Poppet*	*Annealed 316 SS*
6	*Spring*	*Nickel-Based Alloy*
	Lubricant	Molybdenum Disulfide

60CO Series Ball Check Valves

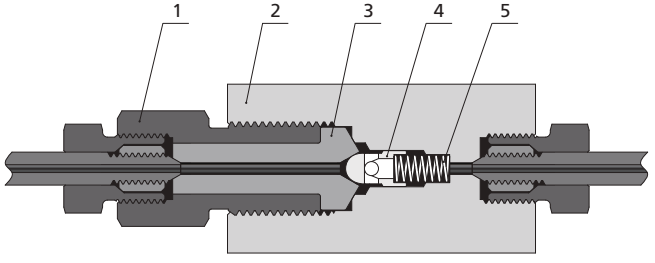

Item	Component	Material Grade
1	Cover Gland	Annealed Stainless Steal
2	*Valve Body*	*Annealed 316 SS*
3	*Cover*	
4	*Ball Poppet*	*Nickel-Based Alloy*
5	*Spring*	
	Lubricant	Molybdenum Disulfide

Wetted components listed in italics.

Ordering Information and Dimensions

15C Series Pipe O-ring Check Valves

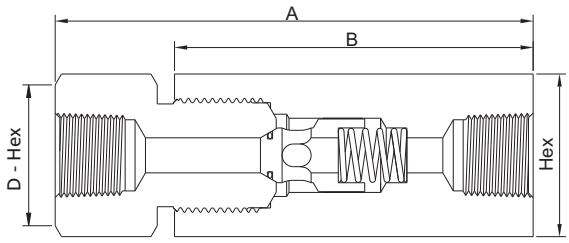

Ordering Number	Connection	Orifice in. (mm)	Cv	Dimensions, in. (mm)				Working Pressure psig (bar)	Working Temperature °F (°C)
				A	B	D - Hex	Hex		
15CSS-FNS4-S	FNS4	0.12 (3.05)	0.28	3.30 (83.8)	2.38 (60.3)	0.94 (23.8)	0.94 (23.8)	10,000 (690)	0 to 400 (-17.8 to 204)
15CSS-FNS6-S	FNS6	0.22 (5.59)	0.84	3.95 (100.33)	2.88 (73.2)	1.13 (28.6)	1.13 (28.6)		
15CSS-FNS8-S	FNS8	0.36 (9.12)	2.30	5.07 (128.8)	3.88 (98.6)	1.38 (34.9)	1.38 (34.9)		

15CO Series Pipe Ball Check Valves

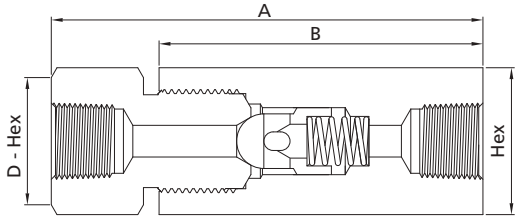

Ordering Number	Connection	Orifice in. (mm)	Cv	Dimensions, in. (mm)				Working Pressure psig (bar)	Working Temperature °F (°C)
				A	B	D - Hex	Hex		
15COSS-FNS4-S	FNS4	0.12 (3.05)	0.28	3.30 (83.8)	2.38 (60.3)	0.94 (23.8)	0.94 (23.8)	10,000 (690)	-110 to 400 (-79 to 204)
15COSS-FNS6-S	FNS6	0.22 (5.59)	0.84	3.95 (100.33)	2.88 (73.2)	1.13 (28.6)	1.13 (28.6)		
15COSS-FNS8-S	FNS8	0.36 (9.12)	2.30	5.07 (128.8)	3.88 (98.6)	1.38 (34.9)	1.38 (34.9)		

20C Series O-Ring Check Valves

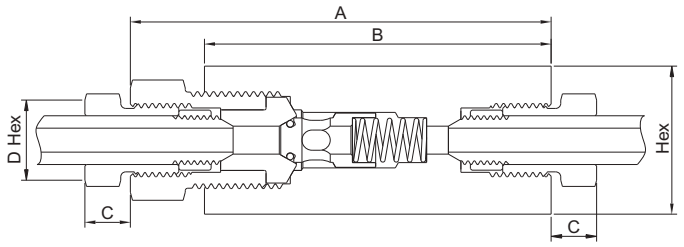

Ordering Number	Connection	Orifice in. (mm)	Cv	Dimensions, in. (mm)					Working Pressure psig (bar)	Working Temperature °F (°C)
				A	B	C	D - Hex	Hex		
20CSS-MF4-S	MF4	0.125 (3.18)	0.28	2.94 (74.7)	2.50 (63.5)	0.38 (9.65)	0.50 (12.7)	0.81 (20.6)	10,000 (690)	0 to 400 (-17.8 to 204)
20CSS-MF6-S	MF6	0.218 (5.54)	0.84	3.12 (79.3)	2.62 (66.6)	0.44 (11.2)	0.62 (15.8)	1.00 (25.4)		
20CSS-MF9-S	MF9	0.359 (9.12)	2.30	4.18 (106.2)	3.50 (88.9)	0.55 (14.0	0.94 (23.9)	1.38 (35.1)		
20CSS-MF12-S	MF12	0.516 (13.11)	4.70	5.50 (139.7)	4.75 (120.7)	0.60 (15.2)	1.19 (30.2)	1.75 (44.5)		
20CSS-MF16-S	MF16	0.688 (17.48)	7.40	6.91 (175.6)	5.75 (146.1)	0.74 (18.8)	1.38 (35.1)	2.12 (53.9)		

20CO Series Ball Check Valves

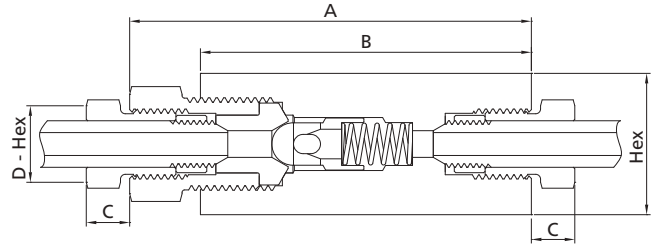

Ordering Number	Connection	Orifice in. (mm)	Cv	Dimensions, in. (mm)					Working Pressure psig (bar)	Working Temperature °F (°C)
				A	B	C	D - Hex	Hex		
20COSS-MF4-S	MF4	0.125 (3.18)	0.28	2.94 (74.7)	2.50 (63.5)	0.38 (9.65)	0.50 (12.7)	0.81 (20.6)	10,000 (690)	-110 to 1200 (-79 to 649)
20COSS-MF6-S	MF6	0.218 (5.54)	0.84	3.12 (79.3)	2.62 (66.6)	0.44 (11.2)	0.62 (15.8)	1.00 (25.4)		
20COSS-MF9-S	MF9	0.359 (9.12)	2.30	4.18 (106.2)	3.50 (88.9)	0.55 (14.0)	0.94 (23.9)	1.38 (35.1)		
20COSS-MF12-S	MF12	0.516 (13.11)	4.70	5.50 (139.7)	4.75 (120.7)	0.60 (15.2)	1.19 (30.2)	1.75 (44.5)		
20COSS-MF16-S	MF16	0.688 (17.48)	7.40	6.91 (175.6)	5.75 (146.1)	0.74 (18.8)	1.38 (35.1)	2.12 (53.9)		

60C Series O-Ring Check Valves

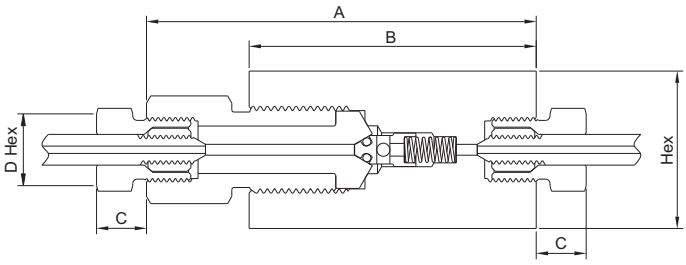

Ordering Number	Connection	Orifice in. (mm)	Cv	Dimensions, in. (mm)					Working Pressure psig (bar)	Working Temperature °F (°C)
				A	B	C	D - Hex	Hex		
60CSS-HF4-S	HF4	0.094 (2.39)	0.15	3.38 (85.9)	2.50 (63.5)	0.47 (11.9)	0.63 (16.0)	1.18 (30.0)	30,000 (2068)	0 to 400 (-17.8 to 204)
60CSS-HF6-S	HF6	0.125 (3.18)	0.28	3.86 (98.1)	2.80 (71.0)	0.61 (15.5)	0.81 (20.6)	1.18 (30.0)		
60CSS-HF9-S	HF9	0.187 (4.75)	0.63	4.62 (117.4)	3.38 (85.85)	0.95 (24.1)	1.12 (28.5)	1.50 (38.1)		

60CO Series Ball Check Valves

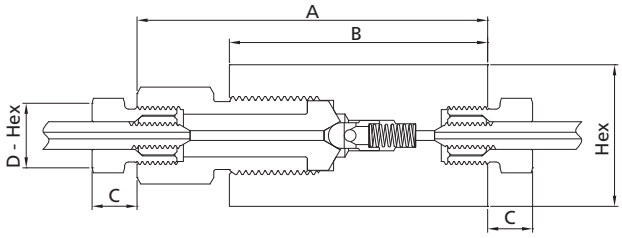

Ordering Number	Connection	Orifice in. (mm)	Cv	Dimensions, in. (mm)					Working Pressure psig (bar)	Working Temperature °F (°C)
				A	B	C	D - Hex	Hex		
60COSS-HF4-S	HF4	0.094 (2.39)	0.15	3.38 (85.9)	2.50 (63.5)	0.47 (11.9)	0.63 (16.0)	1.18 (30.0)	30,000 (2068)	-110 to 1200 (-79 to 649)
60COSS-HF6-S	HF6	0.125 (3.18)	0.28	3.86 (98.1)	2.80 (71.0)	0.61 (15.5)	0.81 (20.6)	1.18 (30.0)		
60COSS-HF9-S	HF9	0.187 (4.75)	0.63	4.62 (117.4)	3.38 (85.85)	0.95 (24.1)	1.12 (28.5)	1.50 (38.1)		

Note: All dimensions are for reference only and are subject to change. For dimensions not shown above, please contact FITOK Group or our authorized distributors.

Ordering Number Description

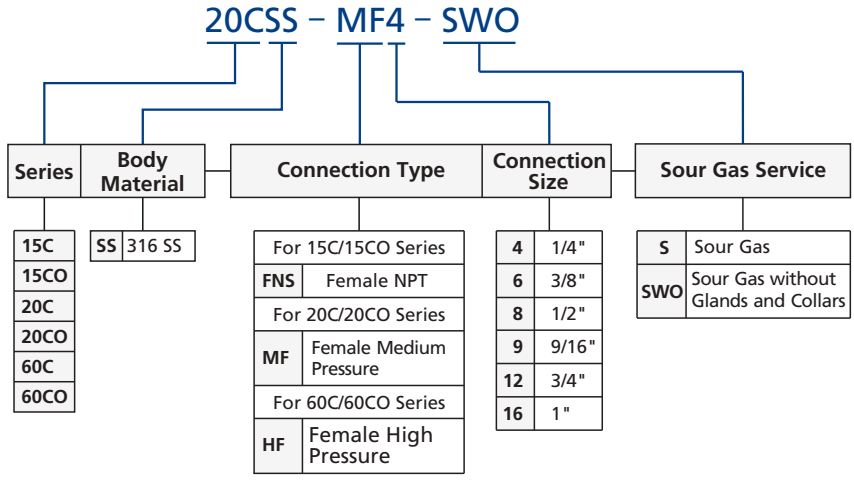

Notes: 1. For more details regarding Medium/High Pressure connections, please see **Connection Information** on A-02.
2. "Ordering Number Description" is a reference to understand the combination rules of FITOK product part number. Not all combinations are available.

Subsea Valves

Subsea Valves  G-02

Subsea Valves



Contents

Subsea Ball Valves G-04

Subsea Hydraulic Ball Valves G-12

Subsea Check Valves G-14

Subsea Needle Valves G-17

Subsea Hydraulic Needle Valves G-20

Subsea Hydraulic Directional Control Valves G-23

Subsea Ball Valves

2-Way Valves, 3-Way Valves

Features

- Working pressure up to 20,000 psig (1379 bar)
- Maximum external pressure: 6,000 psig (414 bar)
- NBR O-ring for operation from -10 to 250°F (-23 to 121°C); other O-ring materials available
- High tensile 316 stainless steel or S17400 stainless steel as standard material for valve body
- Paddle assembly optional
- PEEK seats offer excellent resistance against chemicals, heat and abrasion
- Full-port flow path to minimize pressure drop
- 2-way and 3-way valve configurations
- Bidirectional flow for 2-way valves
- Wide selection of tube and pipe end fittings available
- A variety of wetted materials optional
- Maximum water depth: 13,800 ft. (4200 m)



Pressure vs. Temperature Curve

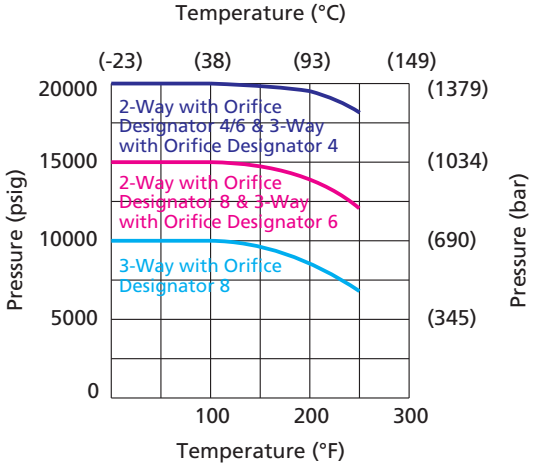

Note: The side connection is not allowed to work as inlet.

Standard Materials of Construction

2-Way Valves

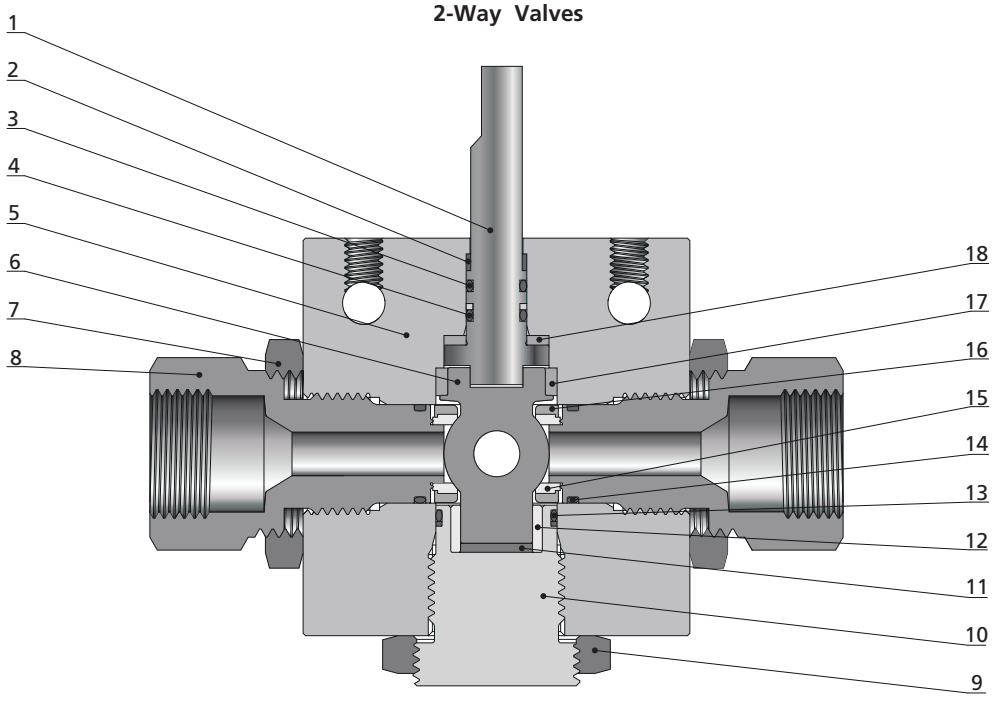

Item	Component	Material Grade
1	*Ball Stem*	*316SS*
2	Stem Backup	PEEK
3	O-Ring	NBR
4	*O-Ring*	*NBR*
5	*Body*	*316 SS / S17400 SS(For Orifice No. 16 Only)*
6	*Ball*	*316SS*
7	Lock Nut	316 SS
8	*Seat Gland*	*316 SS / S17400 SS(For Orifice No. 16 Only)*
9	Locking Piece	316SS
10	*Bottom Gland*	*316 SS / S17400 SS(For Orifice No. 16 Only)*
11	*Bottom Thrust Washer*	*PEEK*
12	*Bearing*	*PEEK*
13	*O-Ring*	*NBR*
14	*O-Ring*	*NBR*
15	*Seat*	*PEEK*
16	*Seat Retainer*	*316SS*
17	*Bearing*	*PEEK*
18	*Thrust Washer*	*PEEK*
	Lubricant	Molybdenum Disulfide/Fluorinated-Based

Wetted components listed in italics.

3-Way Valves

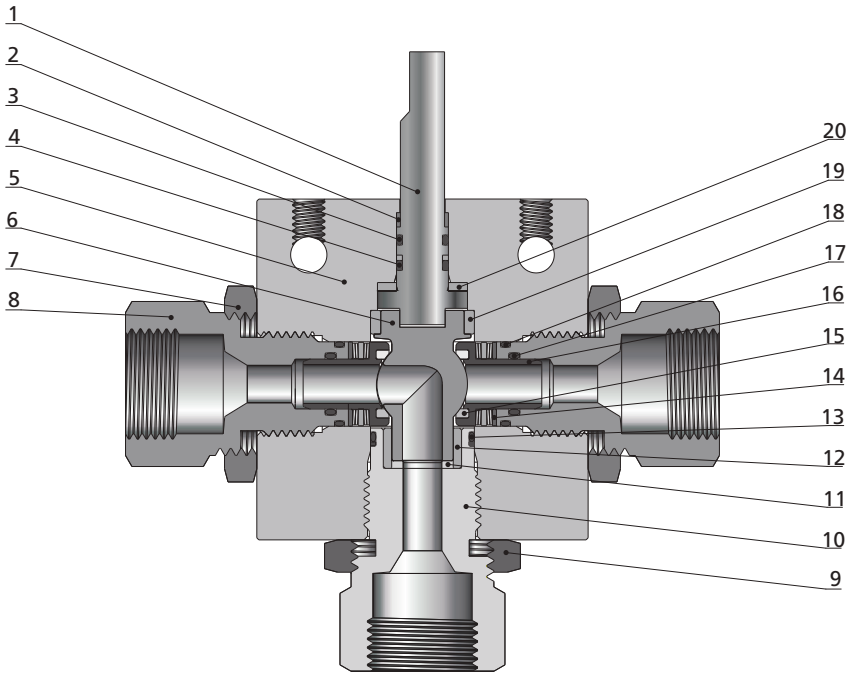

Item	Component	Material Grade
1	*Ball Stem*	*316 SS*
2	Stem Backup	PEEK
3	O-Ring	NBR
4	*O-Ring*	*NBR*
5	*Body*	*316 SS*
6	*Ball*	*316 SS*
7	Lock Nut	316 SS
8	*Seat Gland*	*316 SS*
9	Locking Piece	316SS
10	*Bottom Gland*	*316SS*
11	*Bottom Thrust Washer*	*PEEK*
12	*Bearing*	*PEEK*
13	*O-Ring*	*NBR*
14	*Belleville Washer*	*S17700*
15	*Seat*	*PEEK*
16	*Seat Retainer*	*S17700*
17	*O-Ring*	*NBR*
18	*O-Ring*	*NBR*
19	*Bearing*	*PEEK*
20	*Thrust Washer*	*PEEK*
	Lubricant	Molybdenum Disulfide/Fluorinated-Based

Wetted components listed in italics.

Dimensions

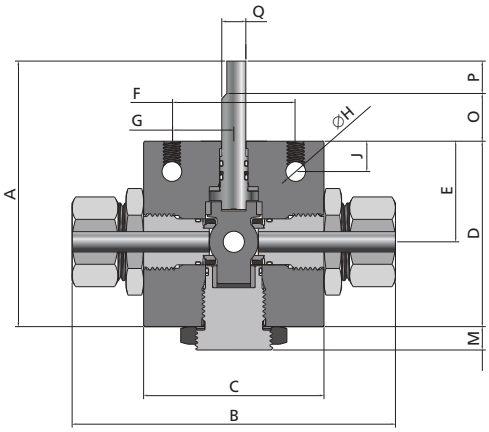

2-Way Valves

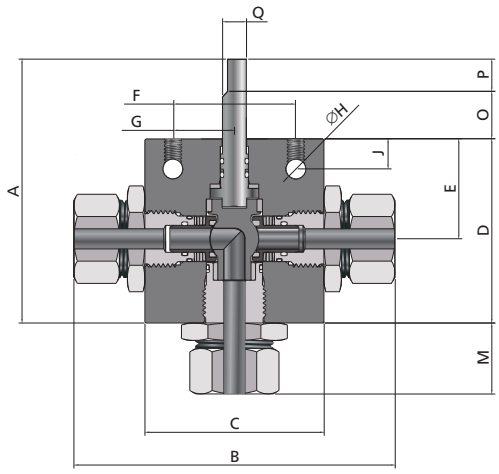

3-Way Valves

Flow Pattern	Orifice No.	Dimensions, in. (mm)										
		A	B	C	D	E	F	G	H	J	M	Block Thickness
2-Way	4	4.31 (109.3)	4.20 (106.8)	2 (50.8)	2.53 (64.2)	1.28 (32.5)	1.5 (38.1)	0.75 (19.05)	0.28 (7.1)	0.43 (10.9)	0.35 (8.8)	1 (25.4)
	6	5.94 (150.8)	5.53 (140.4)	3 (76.2)	3.43 (87.3)	1.78 (45.2)	2.5 (63.5)	1.25 (31.75)	0.31 (7.9)	0.41 (10.3)	0.35 (8.8)	1.38 (34.9)
	8	6.67 (169.5)	7.72 (196.2)	4.12 (104.6)	4.23 (107.5)	2.07 (52.4)	3 (76.2)	1.5 (38.1)	0.31 (7.9)	0.5 (12.7)	0.61 (15.5)	1.75 (44.5)
3-Way	4	4.34 (110.2)	4.70 (119.5)	2.5 (63.5)	2.56 (65)	1.34 (34)	2 (50.8)	1 (25.4)	0.28 (7.1)	0.41 (10.3)	1.1 (28)	1 (25.4)
	8	6.67 (169.5)	7.72 (196.2)	4.12 (104.6)	4.23 (107.5)	2.07 (52.4)	3 (76.2)	1.5 (38.1)	0.31 (7.9)	0.5 (12.7)	1.45 (36.8)	1.75 (44.5)

Flow Pattern	Orifice No.	Dimensions, in. (mm)			
		O	P	Q	R
2-Way	4	1.278 (32.5)	0.50 (12.7)	0.25 (6.35)	0.22 (5.48)
	6	1.24 (31.7)	1.25 (31.8)	0.44 (11.1)	0.38 (9.35)
	8	1.56 (39.7)	0.88 (22.2)	0.59 (14.9)	0.44 (11.13)
3-Way	4	1.28 (32.5)	0.5 (12.7)	0.25 (6.35)	0.22 (5.49)
	8	1.56 (39.7)	0.88 (22.2)	0.62 (15.9)	0.44 (11.13)

Ball Stem Connection

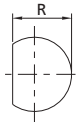

Orifice 4

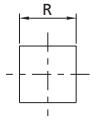

Orifice 6/8

All dimensions are for reference only and are subject to change.

Ball Valve Panel Mounting Dimensions

Flow Pattern	Orifice No.	Dimensions, in. (mm)			
		A	B	C	D
2-Way	4	1.5 (38.1)	0.75 (19.05)	0.31 (7.9)	0.28 (7.1)
3-Way	4	2 (50.8)	1 (25.4)	0.31 (7.9)	0.28 (7.1)

Flow Pattern	Orifice No.	Dimensions, in. (mm)				
		A	B	C	D	E
2-Way	6	2.5 (63.5)	1.25 (31.75)	0.5 (12.7)	0.33 (8.5)	0.88 (22.3)
	8	3 (76.2)	1.5 (38.1)	0.69 (17.5)	0.33 (8.5)	1 (25.4)
3-Way	8	3 (76.2)	1.5 (38.1)	0.69 (17.5)	0.33 (8.5)	1 (25.4)

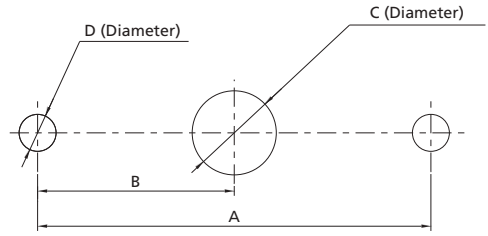

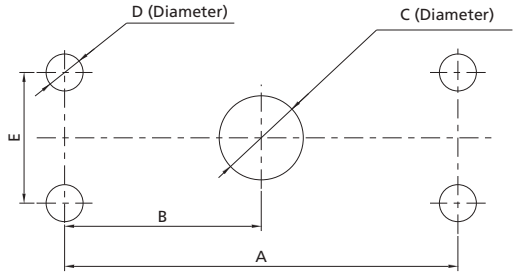

Flow Configuration

2-Way Valves

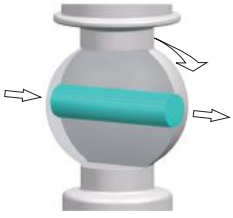

On-Off

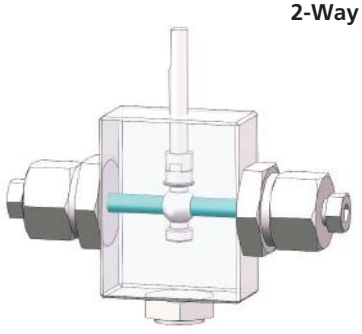

Open

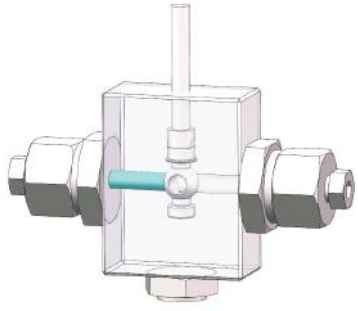

Closed

3-Way Valves

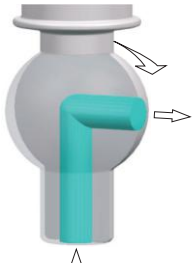

Switching 180° Turn

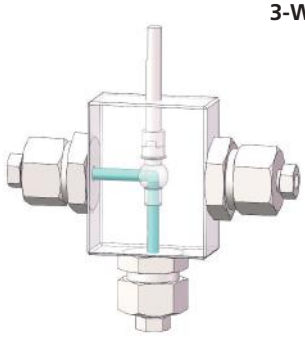

Left Open

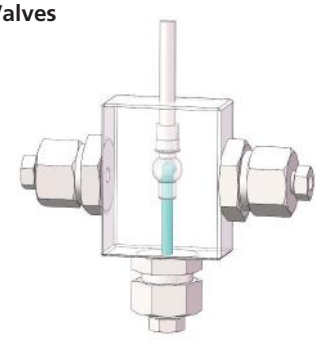

Closed

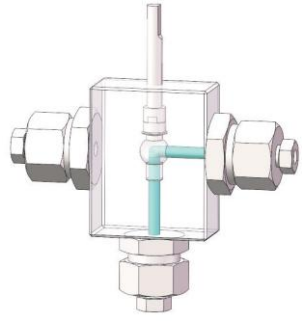

Right Open

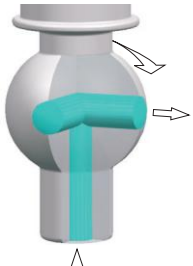

Diverting 90° Turn

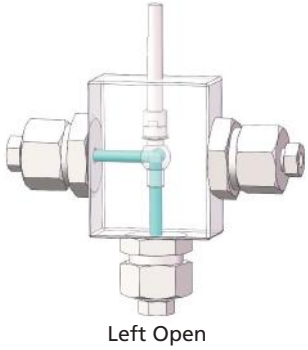

Left Open

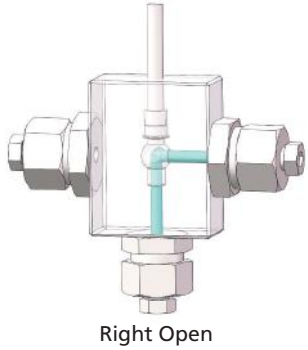

Right Open

Ordering Information and Dimensions

Flow Pattern	Orifice No.	Connection	Orifice Size in. (mm)	Cv	Ordering Number	Working Pressure psig (bar)
2-Way	4	FNS4	0.25 (6.35)	1.51	15SBSS-FNS4-4-1	15,000 (1034)
		FNS6			15SBSS-FNS6-4-1	
		FNS8			15SBSS-FNS8-4-1	
		DFF4	0.128 (3.25)	0.26	20SBSS-DFF4-4-1	20,000 (1379)
		DFF6	0.25 (6.35)	1.51	20SBSS-DFF6-4-1	
		MF4	0.109 (2.77)	0.36	20SBSS-MF4-4-1	
		MF6	0.203 (5.16)	1.23	20SBSS-MF6-4-1	
		MF9	0.25 (6.35)	1.51	20SBSS-MF9-4-1	
		HF4	0.094 (2.39)	0.26	20SBSS-HF4-4-1	
		HF6	0.125 (3.17)	0.47	20SBSS-HF6-4-1	
	6	FNS4	0.375 (9.52)	3.51	15SBSS-FNS4-6-1	15,000 (1034)
		FNS6			15SBSS-FNS6-6-1	
		FNS8			15SBSS-FNS8-6-1	
		MF6	0.203 (5.16)	1.23	20SBSS-MF6-6-1	20,000 (1379)
		MF9	0.312 (7.92)	2.93	20SBSS-MF9-6-1	
		MF12	0.375 (9.52)	3.51	20SBSS-MF12-6-1	
	8	FNS12	0.5 (12.7)	10.2	10SBSS-FNS12-8-1	10,000 (690)
		FNS16			10SBSS-FNS16-8-1	
		MF12			15SBSS-MF12-8-1	15,000 (1034)
		MF16			15SBSS-MF16-8-1	
3-Way	4	FNS4	0.188 (4.77)	0.5	15SBSS-FNS4-4-2	15,000 (1034)
					15SBSS-FNS4-4-2D	
		FNS6			15SBSS-FNS6-4-2	
					15SBSS-FNS6-4-2D	
		MF4	0.109 (2.77)	0.17	20SBSS-MF4-4-2	20,000 (1379)
					20SBSS-MF4-4-2D	
		MF6	0.188 (4.77)	0.5	20SBSS-MF6-4-2	
					20SBSS-MF6-4-2D	

FITOK

Ordering Information and Dimensions (continued)

Flow Pattern	Orifice No.	Connection	Orifice Size in. (mm)	Cv	Ordering Number	Working Pressure psig (bar)
3-Way	4	MF9	0.188 (4.77)	0.5	20SBSS-MF9-4-2	20,000 (1379)
					20SBSS-MF9-4-2D	
		HF4	0.094 (2.39)	0.13	20SBSS-HF4-4-2	
					20SBSS-HF4-4-2D	
		HF6	0.125 (3.17)	0.22	20SBSS-HF6-4-2	
					20SBSS-HF6-4-2D	
	8	MF12	0.5 (12.7)	10.2	10SBSS-MF12-8-2	10,000 (690)

Paddle Assembly Options

Paddle Assembly installed on the valve is suitable for ROV or diver operation to complete the opening and closing or reversing of underwater valves. PAD is made of stainless steel, which has good corrosion resistance in the submarine environment. The limit design is adopted in the structure to prevent the overtorque of ROV from affecting the normal use of the valve, meeting API 17H specification of ROV interface tooling.

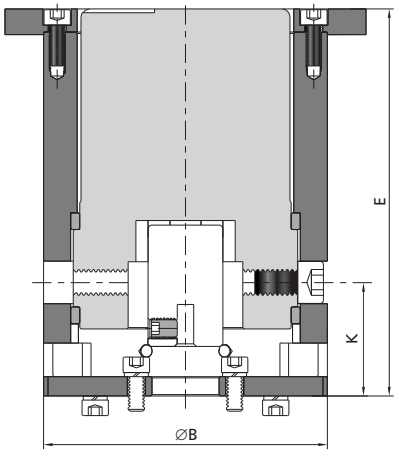

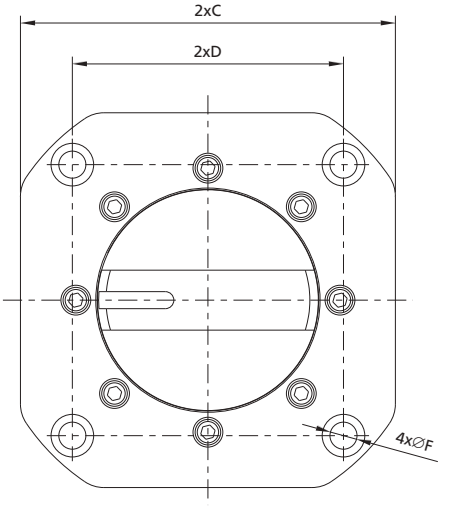

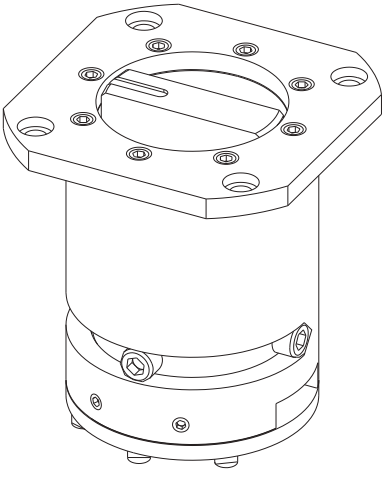

Bottom Mounting Hole

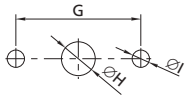

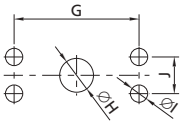

Stem Port

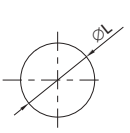

Orifice 4

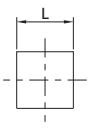

Orifice 6

Note: To order valves with paddle assembly, add "-PAD" to the valve ordering number. Example: 20SBSS-MF4-4-1-PAD.

Ordering Number	Flow Pattern	Orifice No.	Dimensions, in. (mm)											
			A	B	C	D	E	F	G	H	I	J	K	L
SS-PAD-4-1	2-Way	4	3.19 (81)	4.33 (110)	5.51 (140)	3.98 (101)	5.9 (150)	0.39 (10)	1.5 (38.1)	1.02 (26)	0.28 (7.1)	—	1.38 (35.1)	0.25 (6.35)
SS-PAD-6-1		6	3.19 (81)	4.33 (110)	5.51 (140)	3.98 (101)	5.9 (150)	0.39 (10)	2.5 (63.5)	1.44 (36.5)	0.33 (8.5)	0.88 (22.3)	2.5 (63.5)	0.38 (9.35)
SS-PAD-4-2	3-Way	4	3.19 (81)	4.33 (110)	5.51 (140)	3.98 (101)	5.9 (150)	0.39 (10)	2 (50.8)	1.44 (36.5)	0.28 (7.1)	—	1.38 (35.1)	0.25 (6.35)

Ordering Number Description

15SBSS - MF12 - 8VI - 1 - PAD

Series	Body Material	Connection	Orifice No.	O-Ring Material	Flow Pattern	Handle
10SB	4P S17400	For 10SB Series	For 2-Way	NBR	1 2-Way Straight Valves	None
15SB	SS 316SS	FNS12 3/4" Female NPT	4 1/4"	VI Fluorocarbon FKM	2 3-Way Valves, 180° Turn	PAD Paddle Assembly
20SB		FNS16 1" Female NPT	6 3/8"		2D 3-Way Valves, 90° Turn	
		MF12 3/4" Female Medium Pressure	8 1/2"			
		MF16 1" Female Medium Pressure	For 3-Way			
		For 15SB Series	4 3/16"			
		DFF4 1/4" Female 20D Series	6 3/8"			
		DFF6 3/8" Female 20D Series	8 1/2"			
		FNS4 1/4" Female NPT				
		FNS6 3/8" Female NPT				
		FNS8 1/2" Female NPT				
		MF12 3/4" Female Medium Pressure				
		For 20SB Series				
		MF4 1/4" Female Medium Pressure				
		MF6 3/8" Female Medium Pressure				
		MF9 9/16" Female Medium Pressure				
		MF12 3/4" Female Medium Pressure				
		HF4 1/4" Female High Pressure				
		HF6 3/8" Female High Pressure				

Designator	O-Ring Material	Working Temperature Range, °F(°C)
	NBR	-10 to 250 (-23 to 121)
VI	Fluorocarbon FKM	0 to 400 (-17.8 to 204)

Notes: 1. For more details regarding 20D Series and Medium/ High Pressure connections, please see **Connection Information** on A-02.
2. "Ordering Number Description" is a reference to understand the combination rules of FITOK product part number. Not all combinations are available.

Subsea Hydraulic Ball Valves

Features

- Working pressure up to 20,000 psig (1379 bar)
- Maximum external pressure: 6,000 psig (414 bar)
- Hydraulic supply pressure: 3,000 psig (207 bar)
- Working temperature: 0 to 200°F (-17.8 to 93°C)
- High tensile 316 stainless steel or S17400 stainless steel for valve body and S17400 for hydraulic actuator
- Fluorocarbon FKM O-ring and PEEK seal provide excellent resistance against chemicals, heat and abrasion
- Three types of hydraulic actuators (YC, YO, YXTD) available
- Maximum water depth: 13,800 ft. (4200 m)



Subsea Hydraulic Ball Valves (2-Way)

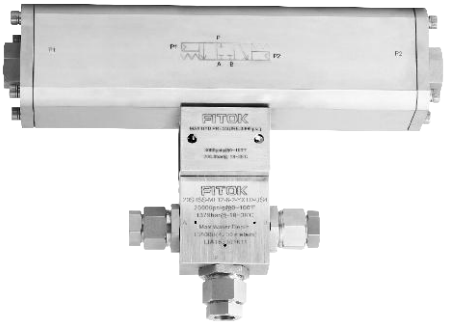

Subsea Hydraulic Ball Valves (3-Way)

Working Principle

2-way (90° on-off)

YC: Hydraulic to open, single acting with spring return (Normally Closed)

Hydraulic pressure applied to port P1 forces the piston to move towards right and compress the spring, causing a clockwise rotation by 90 degrees. The valve fully opens.

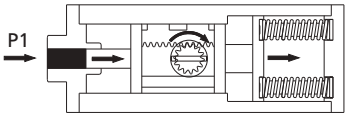

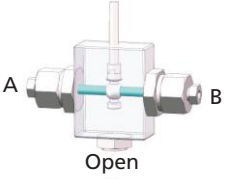

Following loss of hydraulic pressure on port P1, the compressed spring forces the piston to move towards left, causing a counterclockwise rotation by 90 degrees. The valve closes.

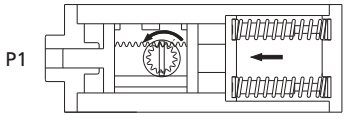

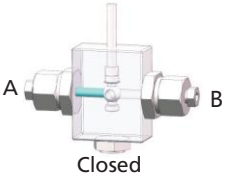

YO: Hydraulic to closed, single acting with spring return (Normally Open)

Hydraulic pressure applied to port P1 forces the piston to move towards right and compress the spring, causing a clockwise rotation by 90 degrees. The valve closes.

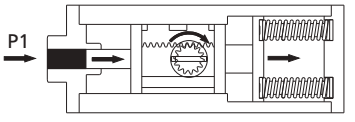

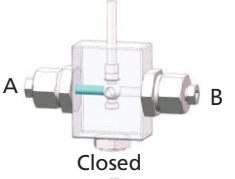

Following loss of hydraulic pressure on port P1, the compressed spring forces the piston to move towards left, causing a counterclockwise rotation by 90 degrees. The valve fully opens.

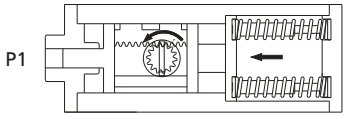

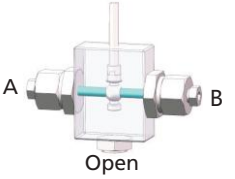

3-way (180° switching)

YXTD: 180° Normally Closed, double acting with spring return

Hydraulic pressure applied to port P1 forces the piston to move towards right and compress the spring, causing a clockwise rotation by 90 degrees. The flow is allowed from bottom inlet port P to outlet A.

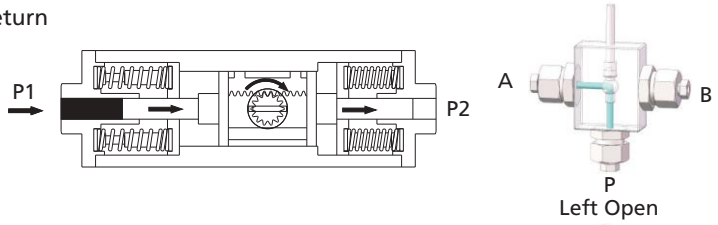

Following loss of hydraulic pressure on port P1, the compressed spring forces the piston to move towards left, causing a counterclockwise rotation by 90 degrees. The valve closes.

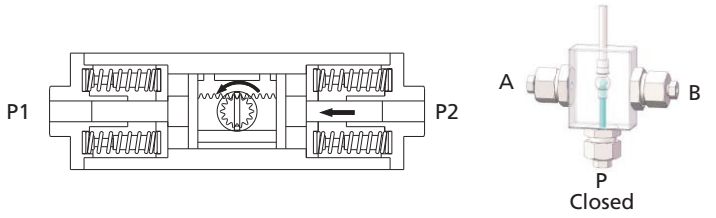

Hydraulic pressure applied to port P2 forces the piston to move towards left and compress the spring, causing a counterclockwise rotation by 90 degrees. The flow is allowed from bottom inlet port P to outlet B.

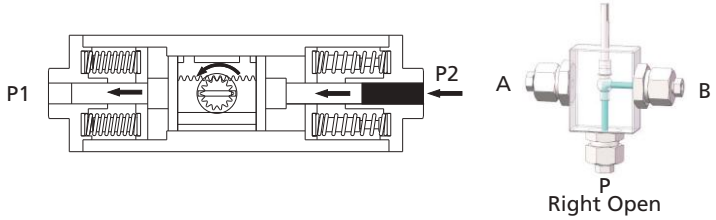

Ordering Number Description

15SBSS - MF6 - 6VI - 1 - YC - FNS4

Series

10SB	
15SB	
20SB	

Body Material

4P	S17400
SS	316SS

Connection

For 10SB Series	
FNS12	3/4" Female NPT
FNS16	1" Female NPT
MF12	3/4" Female Medium Pressure
MF16	1" Female Medium Pressure
For 15SB Series	
DFF4	1/4" Female 20D Series
DFF6	3/8" Female 20D Series
FNS4	1/4" Female NPT
FNS6	3/8" Female NPT
FNS8	1/2" Female NPT
For 20SB Series	
MF4	1/4" Female Medium Pressure
MF6	3/8" Female Medium Pressure
MF9	9/16" Female Medium Pressure
MF12	3/4" Female Medium Pressure
HF4	1/4" Female High Pressure
HF6	3/8" Female High Pressure

Orifice No.

For 2-Way	
4	1/4"
6	3/8"
For 3-Way	
4	3/16"
6	3/8"

O-Ring Material

	NBR
VI	Fluorocarbon FKM

Flow Pattern

1	2-Way Straight Valves
2	3-Way Valves, 180° Turn
2D	3-Way Valves, 90° Turn

Hydraulic Actuator

For 2-way, 3-way	
YC	90° Normally Closed Hydraulic Actuator
YO	90° Normally Open Hydraulic Actuator
YXTD	180° Spring Return Double Acting Hydraulic Actuator

Hydraulic Connection Type

FNS	Female NPT
US	Female SAE O-Ring

Hydraulic Connection Size

4	1/4"
7	7/16"-20
8	1/2"

Notes: 1. For more details regarding 20D Series and Medium/High Pressure connections, please see **Connection Information** on A-02.
2. "Ordering Number Description" is a reference to understand the combination rules of FITOK product part number. Not all combinations are available.

Subsea Check Valves

Features

- Working pressure up to 20,000 psig (1379 bar)
- Maximum external pressure: 6,000 psig (414 bar)
- Cracking pressure: 14 to 26 psig (0.97 to 1.79 bar)
- NBR O-ring for operation from -10 to 250°F (-23 to 121°C); other O-ring materials available
- High tensile 316 stainless steel for valve body
- NACE MR0175 optional
- Provides unidirectional flow and tight shut-off for liquids and gases with high reliability. When differential drops below cracking pressure, valve shuts off (not for use as relief valve)
- Soft seat seal ring style or metal-to-metal seat poppet style available
- Maximum water depth: 13,800 ft. (4200 m)



Standard Materials of Construction

SC Series

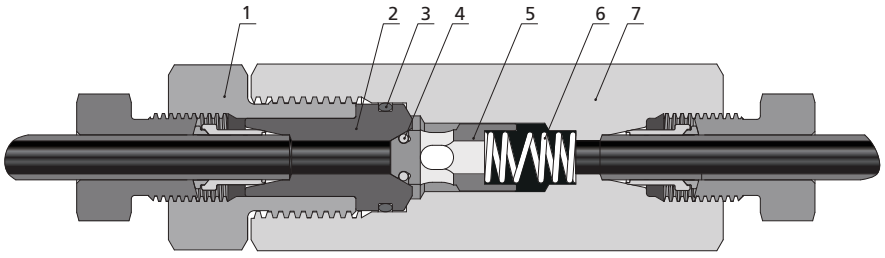

Item	Component	Material Grade
1	Cover Gland	316SS
2	*Cover*	*316SS*
3	Seal Ring	NBR
4	*Seal Ring*	*NBR*
5	*Ball Poppet*	*316SS*
6	*Spring*	*304SS*
7	*Valve Body*	*316SS*

SCO Series

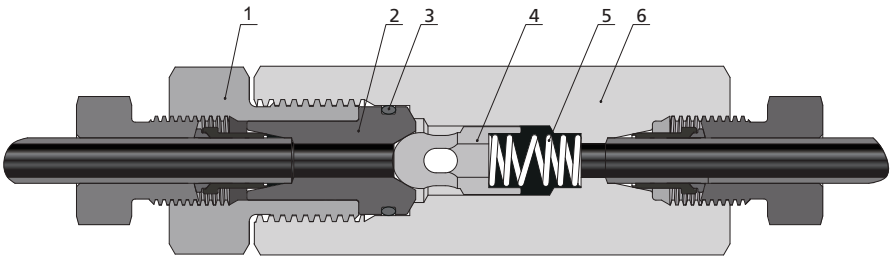

Item	Component	Material Grade
1	Cover Gland	316SS
2	*Cover*	*316SS*
3	Seal Ring	NBR
4	*Ball Poppet*	*S17400SS*
5	*Spring*	*304SS*
6	*Valve Body*	*316SS*

Wetted components listed in italics.

Ordering Information and Dimensions

FNS

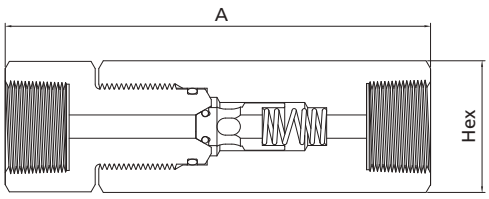

DFF/MF

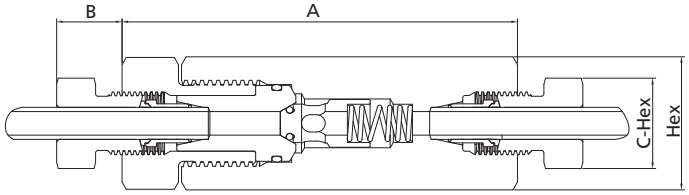

Ordering Number	Connection	Orifice Size in. (mm)	Cv	Dimensions, in. (mm)				Working Pressure psig (bar)
				A	B	C-Hex	Hex	
10SCSS-FNS12	FNS12	0.52 (13.21)	4.70	6.11 (155.19)	—	—	1.75 (44.45)	10,000 (690)
10SCSS-FNS16	FNS16	0.69 (17.53)	7.40	7.32 (185.93)	—	—	1.88 (47.75)	
10SCOSS-FNS12	FNS12	0.52 (13.21)	4.70	6.11 (155.19)	—	—	1.75 (44.45)	
10SCOSS-FNS16	FNS16	0.69 (17.53)	7.40	7.32 (185.93)	—	—	1.88 (47.75)	
15SCSS-DFF4	DFF4	0.188 (4.78)	0.63	3.43 (87.12)	0.52 (13.21)	0.63 (16.00)	0.81 (20.57)	15,000 (1034)
15SCSS-DFF6	DFF6	0.250 (6.35)	1.70	3.82 (97.03)	0.53 (13.46)	0.75 (19.05)	1.00 (25.40)	
15SCSS-DFF8	DFF8	0.36 (9.12)	2.30	4.55 (115.57)	0.60 (15.24)	0.93 (23.62)	1.38 (35.05)	
15SCOSS-DFF4	DFF4	0.188 (4.78)	0.63	3.43 (87.12)	0.53 (13.46)	0.63 (16.00)	0.81 (20.57)	
15SCOSS-DFF6	DFF6	0.250 (6.35)	1.70	3.82 (97.03)	0.53 (13.46)	0.75 (19.05)	1.00 (25.40)	
15SCOSS-DFF8	DFF8	0.36 (9.12)	2.30	4.55 (115.57)	0.60 (15.24)	0.93 (23.62)	1.38 (35.05)	
15SCSS-FNS4	FNS4	0.12 (3.05)	0.28	3.43 (87.12)	—	—	0.94 (23.81)	

Ordering Information and Dimensions (continued)

Ordering Number	Connection	Orifice Size in. (mm)	Cv	Dimensions, in. (mm)				Working Pressure psig (bar)
				A	B	C-Hex	Hex	
15SCSS-FNS6	FNS6	0.22 (5.59)	0.84	3.82 (97.03)	—	—	1.13 (28.58)	15,000 (1034)
15SCSS-FNS8	FNS8	0.36 (9.12)	2.30	4.55 (115.57)	—	—	1.38 (35.05)	
15SCOSS-FNS4	FNS4	0.12 (3.05)	0.28	3.43 (87.12)	—	—	0.94 (23.81)	
15SCOSS-FNS6	FNS6	0.22 (5.59)	0.84	3.82 (97.03)	—	—	1.13 (28.58)	
15SCOSS-FNS8	FNS8	0.36 (9.12)	2.30	4.55 (115.57)	—	—	1.38 (35.05)	
20SCSS-MF4	MF4	0.125 (3.18)	0.28	2.94 (74.68)	0.38 (9.65)	0.50 (12.70)	0.81 (20.57)	20,000 (1379)
20SCSS-MF6	MF6	0.218 (5.54)	0.84	3.34 (84.84)	0.44 (11.18)	0.62 (15.75)	1.00 (25.40)	
20SCSS-MF9	MF9	0.359 (9.12)	2.30	4.35 (110.49)	0.55 (13.97)	0.94 (23.81)	1.38 (35.05)	
20SCSS-MF12	MF12	0.516(13.11)	4.70	5.50 (139.70)	0.62 (15.75)	1.19 (30.23)	1.75 (44.45)	
20SCSS-MF16	MF16	0.688(17.48)	7.40	7.07 (179.59)	0.74 (18.80)	1.38 (35.05)	2.12 (53.85)	
20SCOSS-MF4	MF4	0.125 (3.18)	0.28	2.94 (74.68)	0.38 (9.65)	0.50 (12.70)	0.81 (20.57)	
20SCOSS-MF6	MF6	0.218 (5.54)	0.84	3.12 (79.25)	0.47 (11.94)	0.62 (15.75)	1.00 (25.40)	
20SCOSS-MF9	MF9	0.359 (9.12)	2.30	4.18 (106.17)	0.53 (13.46)	0.94 (23.81)	1.38 (35.05)	
20SCOSS-MF12	MF12	0.516 (13.11)	4.70	5.50 (139.70)	0.62 (15.75)	1.19 (30.23)	1.75 (44.45)	
20SCOSS-MF16	MF16	0.688 (17.48)	7.40	6.63 (168.40)	0.72 (18.29)	1.38 (35.05)	2.12 (53.85)	

Ordering Number Description

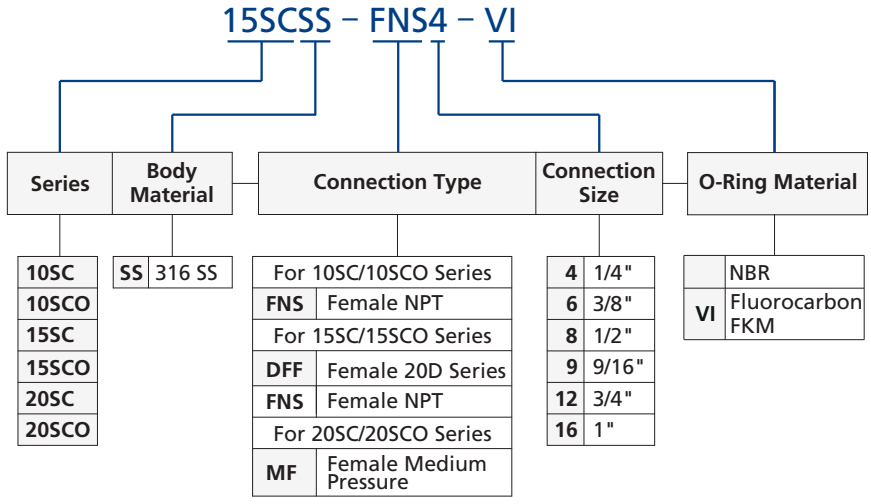

Notes: 1. For more details regarding 20D Series and Medium Pressure connections, please see **Connection Information** on A-02.
2. "Ordering Number Description" is a reference to understand the combination rules of FITOK product part number. Not all combinations are available.
3. Please contact FITOK Group or our authorized distributors for more information on wetted materials (Eg: 2507 SD), seal materials and operational designs to fulfill your application requirements.

Designator	O-Ring Material	Working Temperature Range, °F(°C)
	NBR	-10 to 250 (-23 to 121)
VI	Fluorocarbon FKM	0 to 400 (-17.8 to 204)

Subsea Needle Valves

Features

- Working pressure up to 20,000 psig (1379 bar)
- Maximum external pressure: 6,000 psig (414 bar)
- NBR O-ring for operation from -10 to 250°F (-23 to 121°C); other O-ring materials available
- High tensile 316 stainless steel for valve body
- Standard stem seal material: PTFE
- NACE MR0175 optional
- Using a two-part spindle assembly with a non-rising upper stem, it is of great advantage when being used with ROVs
- Non-rotating lower stem to ensure positive non-galling operation during shut-off
- Packing located under stem threads
- Metal-to-metal seating to ensure ideal shut-off, longer stem/seat service lifetime for abrasive flow, excellent corrosion resistance and greater durability for repeated on/off cycles
- Reliable packing gland locking device
- Wide selection of tube and pipe end fittings available
- 2-way straight and angle flow patterns available
- Orifice size: 0.203"
- Rated Cv: 0.75
- Maximum water depth: 13,800 ft. (4200 m)



Pressure vs. Temperature Curve

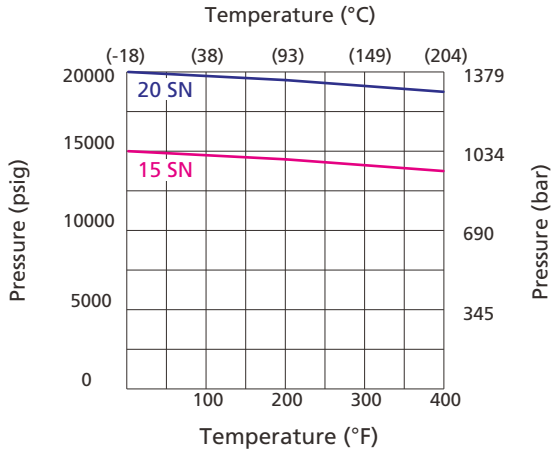

Standard Materials of Construction

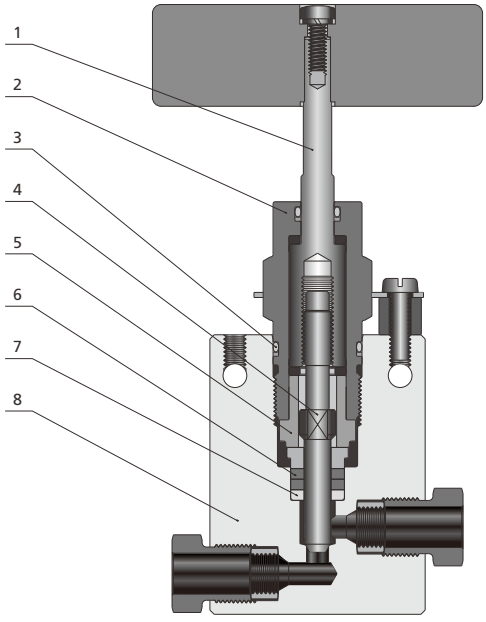

2-Way Straight

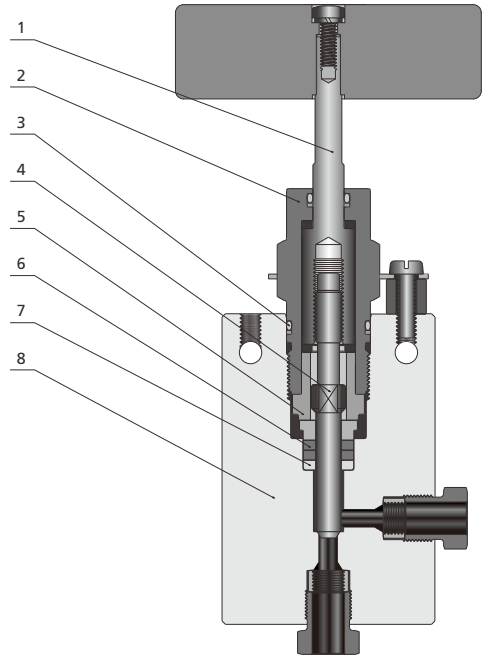

2-Way Angle

Item	Component	Material Grade
1	Upper Stem	316SS
2	Packing Gland	316SS
3	O-Ring	NBR
4	*Lower Stem*	*S17400*
5	Packing Ring	C63000
6	*Packing*	*PTFE*
7	*Packing Washer*	*S17400*
8	*Body*	*316 SS*
	Lubricant	Molybdenum Disulfide

Wetted components listed in italics.

Ordering Information and Dimensions

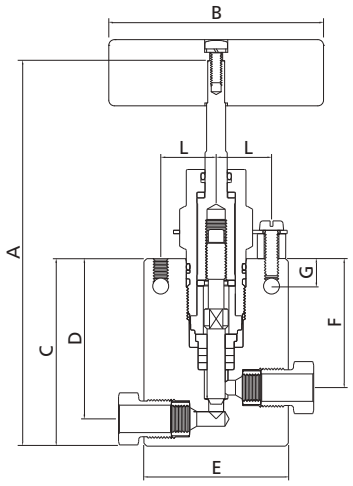

2-Way Straight

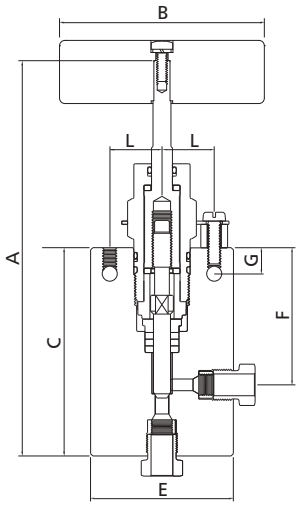

2-Way Angle

Ordering Number	Connection	Dimensions, in. (mm)								
		A	B	C	D	E	F	G	L	Block Thickness
20SNSS-MF6-1	MF6	5.35 (135.9)	3.00 (76.2)	2.60 (66.00)	2.22 (56.4)	2.00 (50.8)	1.79 (45.40)	0.38 (9.65)	0.77 (19.5)	1.00 (25.4)
20SNSS-MF9-1	MF9	5.75 (146.1)	3.00 (76.2)	3.00 (76.2)	2.40 (61.0)	2.50 (63.5)	2.00 (50.8)	0.38 (9.65)	0.77 (19.5)	1.50 (38.1)
20SNSS-MF12-1	MF12	5.90 (149.9)	3.00 (76.2)	3.15 (80.0)	2.43 (61.8)	3.00 (76.2)	2.00 (50.8)	0.38 (9.65)	0.77 (19.5)	1.50 (38.1)
20SNSS-MF6-2	MF6	5.78 (146.9)	3.00 (76.2)	3.03 (77.00)	—	2.00 (50.8)	1.78 (45.40)	0.38 (9.65)	0.77 (19.5)	1.00 (25.4)
20SNSS-MF9-2	MF9	6.25 (158.8)	3.00 (76.2)	3.50 (88.9)	—	2.50 (63.5)	2.00 (50.8)	0.38 (9.65)	0.77 (19.5)	1.50 (38.1)
20SNSS-MF12-2	MF12	6.50 (165.2)	3.00 (76.2)	3.75 (95.3)	—	3.00 (76.2)	2.00 (50.8)	0.38 (9.65)	0.77 (19.5)	1.50 (38.1)

Ordering Number Description

20SNSS – MF6 – R2 – VI

Series	Body Material	Connection	Stem Tip	Flow Pattern	O-Rng Material
15SN	SS 316 SS	For 15SN Series		1 Straight	NBR
20SN		DFF4 1/4" Female 20D Series	R Regulating	2 Angle	VI Fluorocarbon FKM
		DFF6 3/8" Female 20D Series			
		DFF8 1/2" Female 20D Series			
		FNS4 1/4" Female NPT			
		FNS6 3/8" Female NPT			
		FNS8 1/2" Female NPT			
		For 20SN Series			
		MF6 3/8" Female Medium Pressure			
		MF9 9/16" Female Medium Pressure			
		MF12 3/4" Female Medium Pressure			

Designator	O-Ring Material	Working Temperature Range, °F(°C)
	NBR	-10 to 250 (-23 to 121)
VI	Fluorocarbon FKM	0 to 400 (-17.8 to 204)

Notes: 1. For more details regarding 20D Series and Medium Pressure connections, please see **Connection Information** on A-02.
2. "Ordering Number Description" is a reference to understand the combination rules of FITOK product part number. Not all combinations are available.

Subsea Hydraulic Needle Valves

Features

- Working pressure up to 20,000 psig (1379 bar)
- Maximum external pressure: 6,000 psig (414 bar)
- Hydraulic supply pressure: 3,000 psig (207 bar)
- Working temperature: 0 to 175°F (-18 to 80°C)
- High tensile 316 stainless steel for valve body
- Standard stem seal material: PTFE
- NACE MR0175 optional
- Metal-to-metal seating to ensure ideal shut-off, longer stem/seat service lifetime for abrasive flow, excellent corrosion resistance and greater durability for repeated on/off cycles
- Reliable packing gland locking device
- Wide selection of tube and pipe end fittings available
- 2-way straight and angle flow patterns available
- Orifice: 0.203"
- Rated Cv: 0.75
- Maximum water depth: 13,800 ft. (4200 m)



Standard Materials of Construction

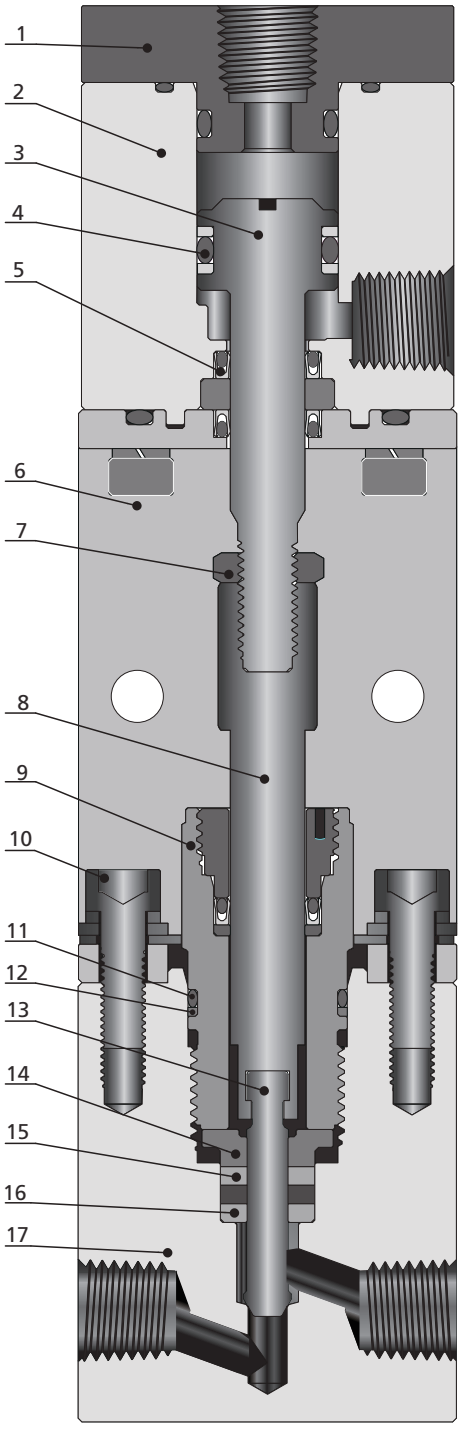

Item	Component	Material Grade
1	Gland	316 SS
2	Actuator Body	316 SS
3	Piston Rod	316 SS
4	O-Ring	Fluorocarbon FKM
5	Piston Seal	UHMWPE
6	Support Block	316 SS
7	Nut	Stainless Steel
8	Upper Stem	316 SS
9	Packing Gland	316 SS
10	Locking Screw	SS
11	O-Ring	NBR
12	O-Ring Retainer	PTFE
13	*Lower Stem*	*S17400*
14	Packing Ring	C63000
15	*Packing*	*PTFE*
16	*Packing Washer*	*S17400*
17	*Body*	*316 SS*

Wetted components listed in italics.

Ordering Number Description

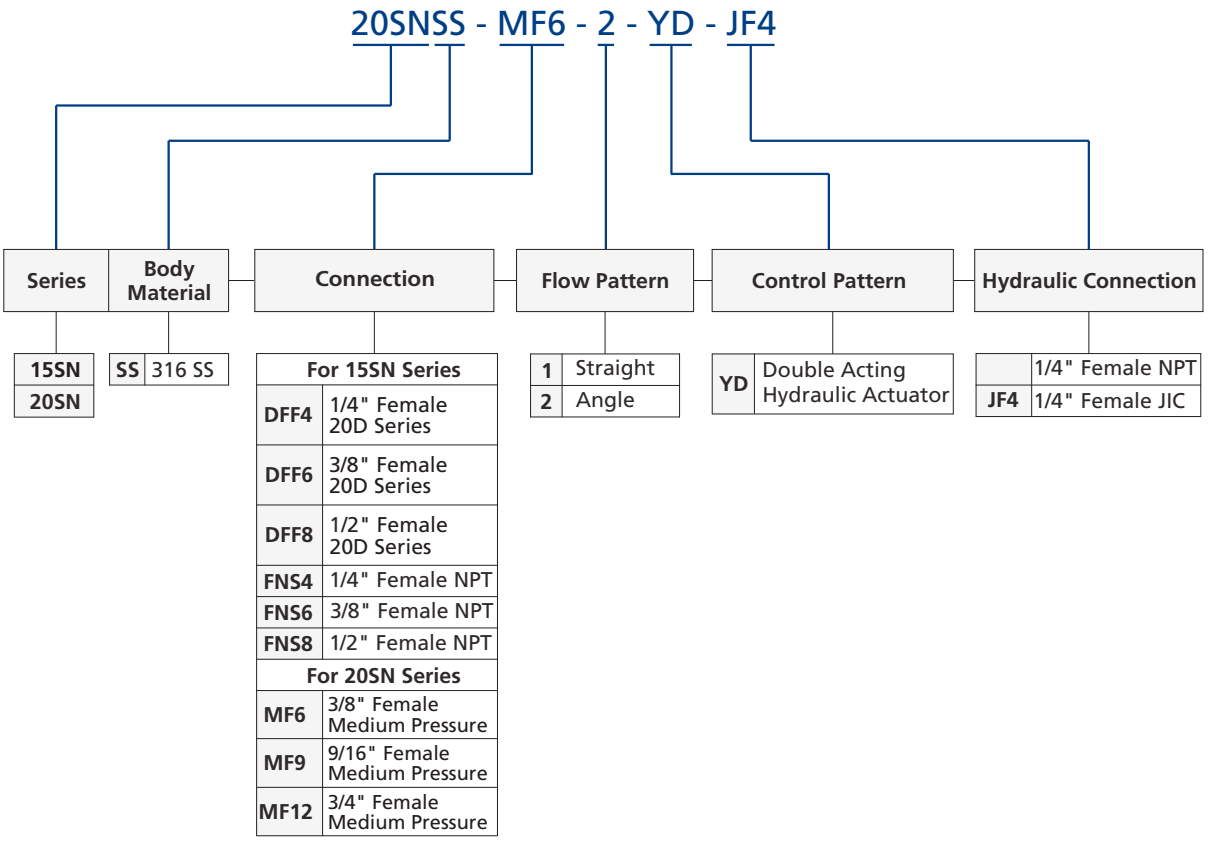

Notes: 1. For more details regarding 20D Series and Medium Pressure connections, please see **Connection Information** on A-02.
2. "Ordering Number Description" is a reference to understand the combination rules of FITOK product part number. Not all combinations are available.

Subsea Hydraulic Directional Control Valves

Features

- Working pressure up to 20,000 psig (1379 bar)
- Pilot working pressure: 3,000 psig (207 bar)
- Maximum external pressure: 6,000 psig (414 bar)
- NBR O-ring for operation from -10 to 250°F (-23 to 121°C); other O-ring materials available
- High tensile 316 stainless steel for valve body
- NBR O-rings seal provides excellent oil resistance
- Easy to connect, switch off and reverse between different flow channels
- Hydraulic remote control for easy operation
- Bolt connection for easy disassembly and maintenance
- Low impact performance to maximize cycle life
- Suitable for application with oil or water
- Orifice size: 0.25", 0.375"
- Maximum water depth: 13,800 ft. (4200 m)



Standard Materials of Construction

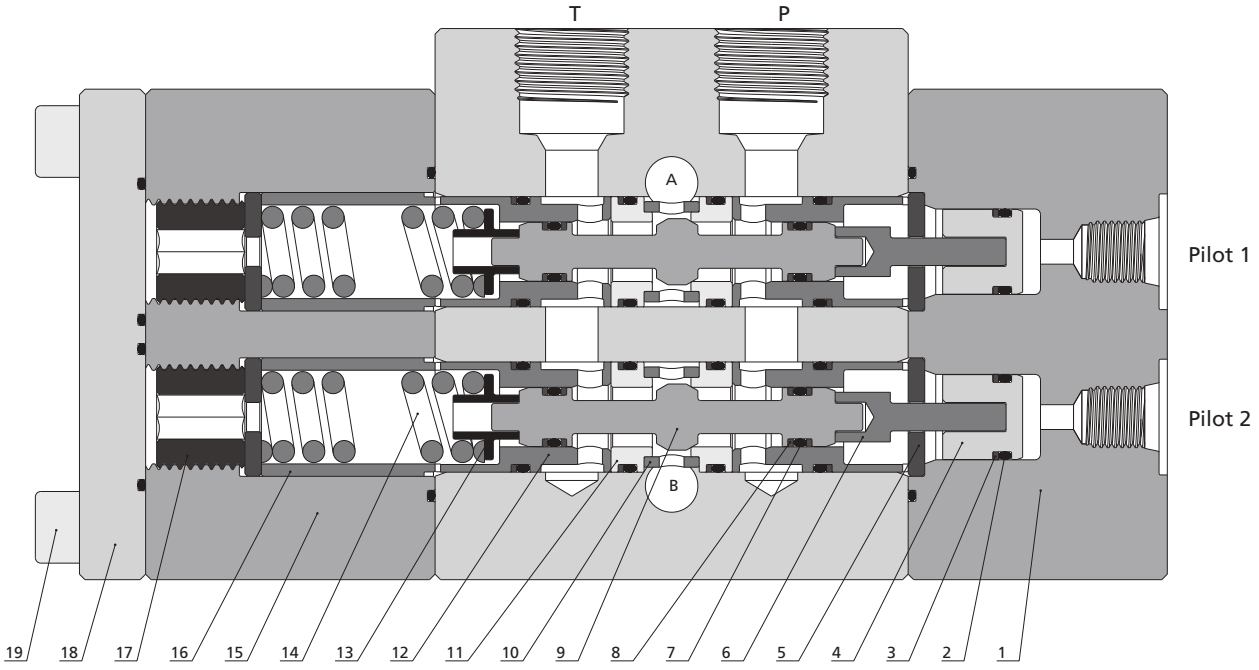

Circuit Symbol

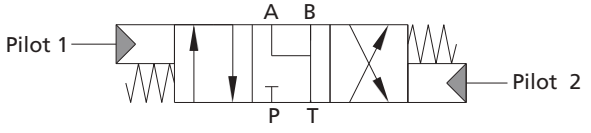

3-Position, 4-Way

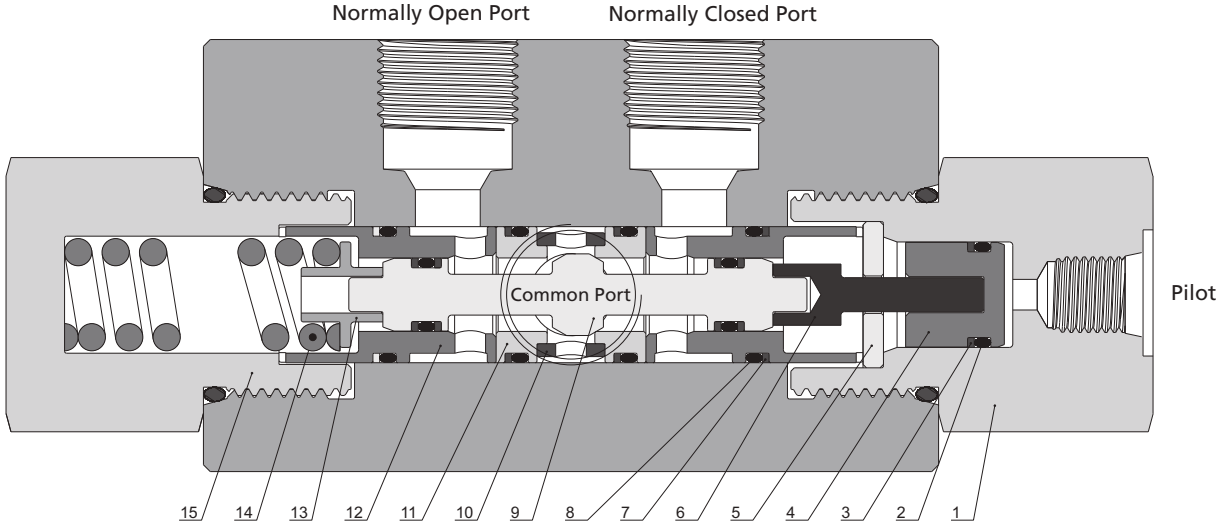

Circuit Symbol

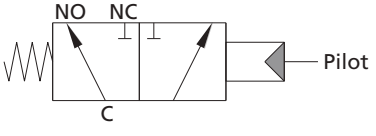

2-Position, 3-Way

Item	Component	Material Grade
1	Gland	F316
2	O-Ring	NBR
3	Retaining Ring	PTFE
4	Piston	316 SS
5	Gasket	316 SS
6	Connection Block	316 SS
7	*O-Ring*	*NBR*
8	*Retaining Ring*	*PEEK*
9	*Stem*	*S17400*
10	*Pad*	*S17400*
11	*Seat*	*316 SS*
12	*Bush*	*S17400*
13	Connection Block	316 SS
14	Spring	S17700
15	Gland	F316
16	Bush	S17400
17	Screw	316 SS
18	Gland	F316
19	Locking Screw	316 SS

Wetted components listed in italics.

Ordering Information and Dimensions

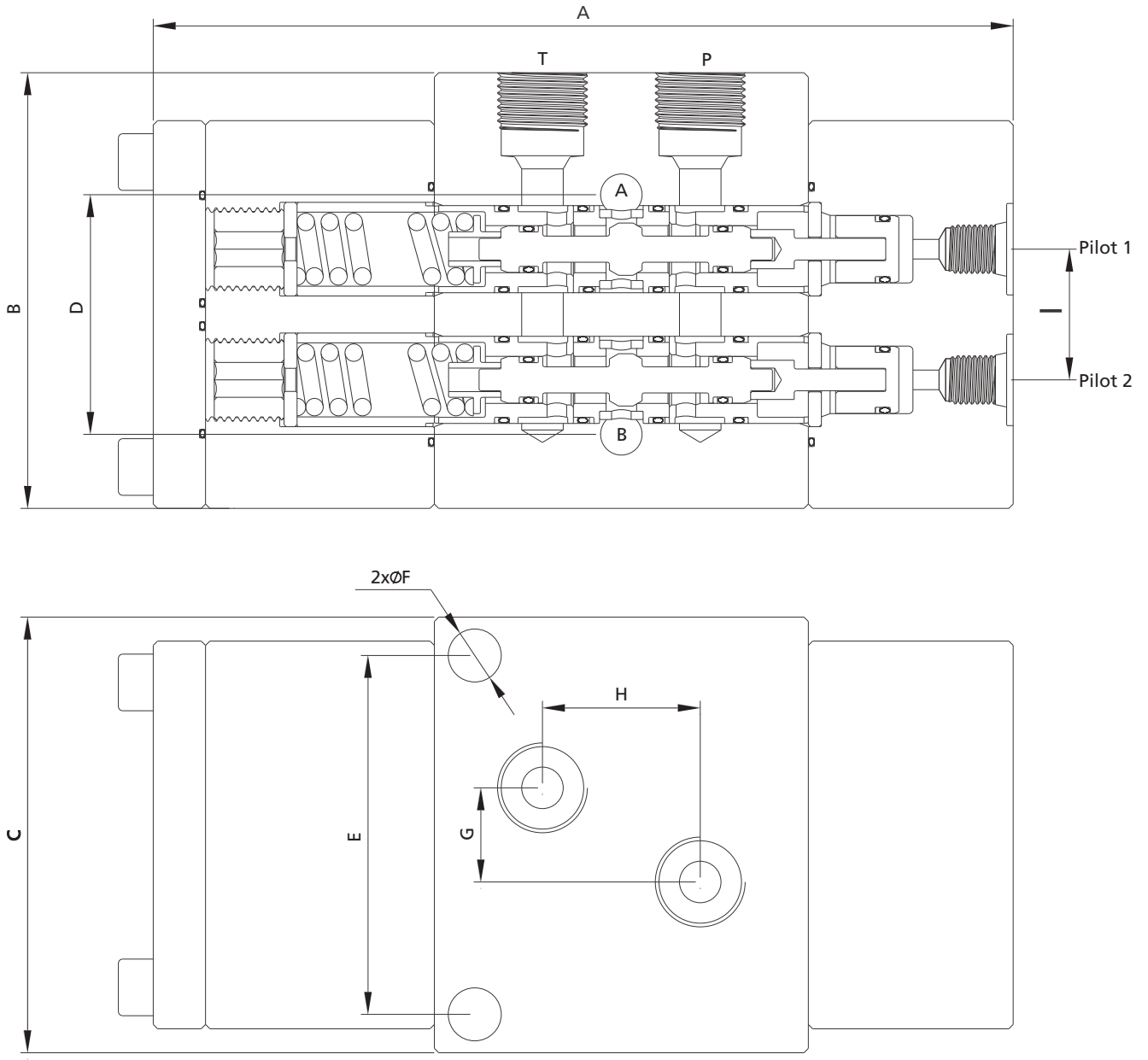

3-Position, 4-Way

Ordering Number	Dimensions, in. (mm)										Working Pressure psig (bar)
	A	B	C	D	E	F	G	H	I	Orifice	
15SDCSS-3P4W-MF9-US7	6.70 (170.3)	3.50 (88.9)	3.50 (88.9)	1.74 (44.2)	2.82 (71.1)	0.41 (10.5)	0.76 (19.4)	1.13 (28.6)	1.00 (25.4)	0.25 (6.35)	15,000 (1034)
15SDCSS-3P4W-MF9-6-US7	7.20 (183)	3.54 (90)	3.74 (95)	1.26 (32)	3.19 (81)	0.33 (8.5)	1.02 (26)	1.10 (28)	1.10 (28)	0.375 (9.53)	
20SDCSS-3P4W-MF9-6-US7	7.20 (183)	3.78 (96)	4.13 (105)	1.26 (32)	3.50 (89)	0.33 (8.5)	1.02 (26)	1.46 (37)	1.10 (28)	0.375 (9.53)	20,000 (1379)

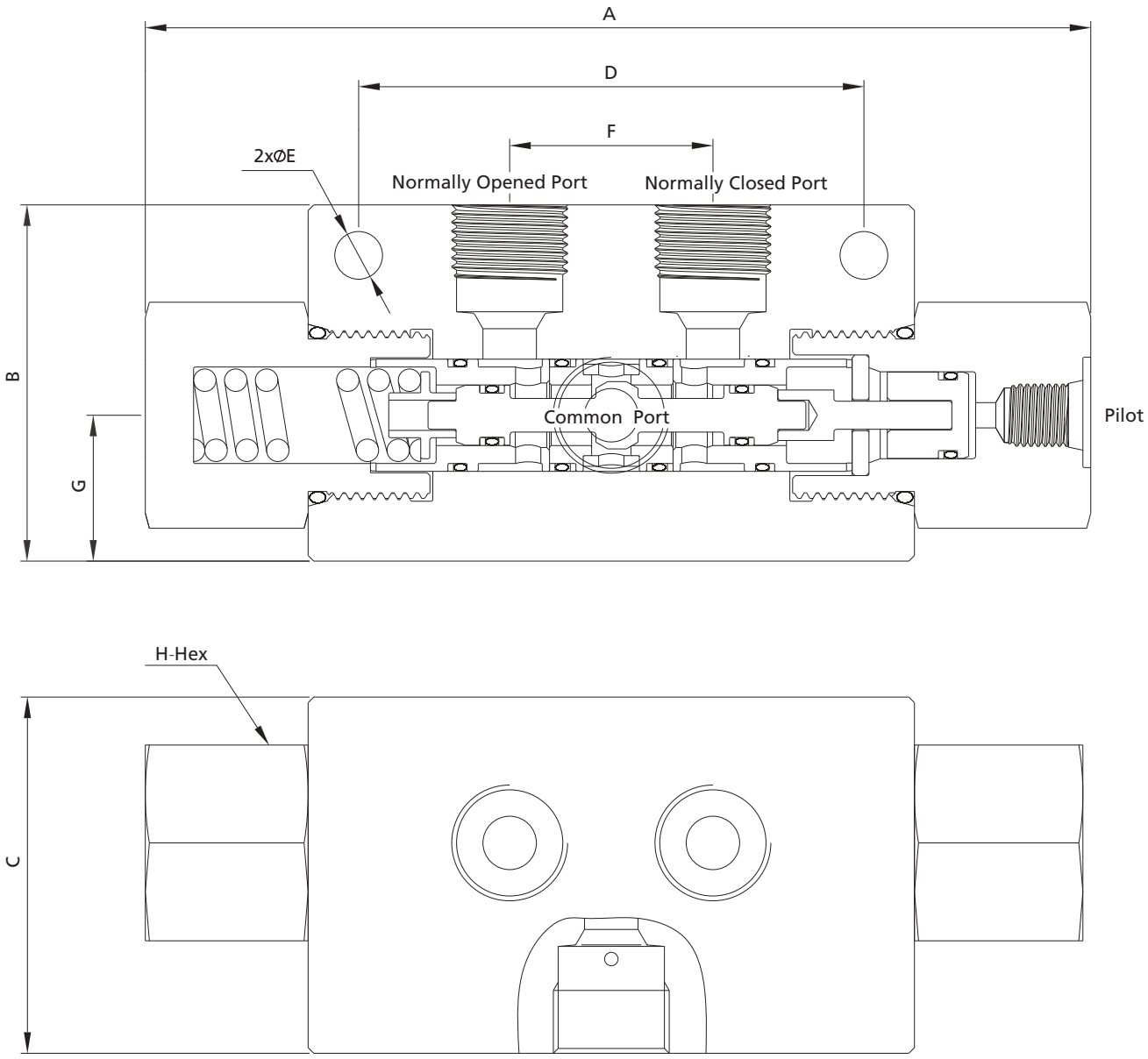

2-Position, 3-Way

Ordering Number	Dimensions, in. (mm)									Working Pressure psig (bar)
	A	B	C	D	E	F	G	H	Orifice	
15SDCSS-2P3W-MF9-US7	6.40 (162.5)	2.56 (65)	2.56 (65)	3.70 (94)	033 (8.5)	142 (36)	1.02 (26)	163 (41.28)	025 (6.35)	15,000 (1034)
15SDCSS-2P3W-MF9-6-US7	6.40 (162.5)	2.56 (65)	2.56 (65)	3.70 (94)	0.33 (8.5)	142 (36)	102 (26)	163 (41.28)	0375 (9.53)	

FITOK

Ordering Number Description

15SDCSS - 3P4W - MF9 - 6 -US7 - VI

Series	Body Material	Position Number	Way Number	Port Connection	Orifice No.	Pilot Connection	Thread Size	O-Ring Material
15SDC	SS 316	3P 3-Position	4W 4-Way	FNS4 1/4" Female NPT	1/4"	US Female SAE O-Ring	7 7/16-20	NBR
20SDC		2P 2-Position	3W 3-Way	FNS6 3/8" Female NPT	6 3/8"			VI Fluorocarbon FKM
				FNS8 1/2" Female NPT				
				MF6 3/8" Female Medium Pressure				
				MF9 9/16" Female Medium Pressure				
				MF12 3/4" Female Medium Pressure				

Designator	O-Ring Material	Working Temperature Range, °F(°C)
	NBR	-10 to 250 (-23 to 121)
VI	Fluorocarbon FKM	0 to 400 (-17.8 to 204)

Notes: 1. For more details regarding Medium Pressure connection, please see **Connection Information** on A-02.

2. "Ordering Number Description" is a reference to understand the combination rules of FITOK product part number. Not all combinations are available.

Part Number Crossover Charts

Part Number Crossover Charts



This Catalog supersedes all previous editions. Compared to the earlier versions, changes are mainly limited to series names and port designators. Except for the structural optimization of ball valves, there is no change in the design and function of other products. Due to these changes, product P/Ns are accordingly updated. Please refer to the crossover charts below in your product selection.

Part Number Crossover Charts

20D Series Tube Fittings

Formerly Used P/N	New P/N Adopted
SS-U-DHL2	SS-DU-DFF2
SS-U-DHL4	SS-DU-DFF4
SS-U-DHL6	SS-DU-DFF6
SS-U-DHL8	SS-DU-DFF8
SS-U-DHL9	SS-DU-DFF9
SS-U-DHL12	SS-DU-DFF12
SS-U-DHL4-DHL2	SS-DU-DFF4-DFF2
SS-U-DHL6-DHL2	SS-DU-DFF6-DFF2
SS-U-DHL6-DHL4	SS-DU-DFF6-DFF4
SS-U-DHL8-DHL4	SS-DU-DFF8-DFF4
SS-U-DHL8-DHL6	SS-DU-DFF8-DFF6
SS-U-DHL9-DHL8	SS-DU-DFF9-DFF8
SS-U-DHL12-DHL8	SS-DU-DFF12-DFF8
SS-BU-DHL2	SS-DBU-DFF2
SS-BU-DHL4	SS-DBU-DFF4
SS-BU-DHL6	SS-DBU-DFF6
SS-BU-DHL8	SS-DBU-DFF8
SS-BU-DHL9	SS-DBU-DFF9
SS-BU-DHL12	SS-DBU-DFF12
SS-CM-DHL2-NS2	SS-DCM-DFF2-NS2
SS-CM-DHL2-NS4	SS-DCM-DFF2-NS4
SS-CM-DHL2-NS6	SS-DCM-DFF2-NS6
SS-CM-DHL4-NS2	SS-DCM-DFF4-NS2
SS-CM-DHL4-NS4	SS-DCM-DFF4-NS4
SS-CM-DHL4-NS6	SS-DCM-DFF4-NS6
SS-CM-DHL4-NS8	SS-DCM-DFF4-NS8
SS-CM-DHL6-NS4	SS-DCM-DFF6-NS4
SS-CM-DHL6-NS6	SS-DCM-DFF6-NS6
SS-CM-DHL6-NS8	SS-DCM-DFF6-NS8
SS-CM-DHL8-NS4	SS-DCM-DFF8-NS4
SS-CM-DHL8-NS6	SS-DCM-DFF8-NS6
SS-CM-DHL8-NS8	SS-DCM-DFF8-NS8
SS-CM-DHL8-NS12	SS-DCM-DFF8-NS12
SS-CM-DHL9-NS4	SS-DCM-DFF9-NS4
SS-CM-DHL9-NS8	SS-DCM-DFF9-NS8
SS-CM-DHL12-NS8	SS-DCM-DFF12-NS8
SS-CM-DHL12-NS12	SS-DCM-DFF12-NS12
SS-CM-DHL12-NS16	SS-DCM-DFF12-NS16
SS-CM-DHL2-SH7	SS-DCM-DFF2-SH7
SS-CM-DHL2-SH9	SS-DCM-DFF2-SH9
SS-CM-DHL4-SH7	SS-DCM-DFF4-SH7
SS-CM-DHL4-SH9	SS-DCM-DFF4-SH9
SS-CM-DHL6-SH7	SS-DCM-DFF6-SH7
SS-CM-DHL6-SH9	SS-DCM-DFF6-SH9
SS-CM-DHL8-SH7	SS-DCM-DFF8-SH7
SS-CM-DHL8-SH9	SS-DCM-DFF8-SH9
SS-CF-DHL2-NS2	SS-DCF-DFF2-FNS2
SS-CF-DHL2-NS4	SS-DCF-DFF2-FNS4
SS-CF-DHL4-NS4	SS-DCF-DFF4-FNS4
SS-CF-DHL6-NS4	SS-DCF-DFF6-FNS4
SS-CF-DHL8-NS4	SS-DCF-DFF8-FNS4
SS-CF-DHL8-NS8	SS-DCF-DFF8-FNS8
SS-CF-DHL12-NS8	SS-DCF-DFF12-FNS8
SS-R-DHL4-DHM6	SS-DR-DFF4-DFT6
SS-R-DHL4-DHM8	SS-DR-DFF4-DFT8
SS-R-DHL6-DHM8	SS-DR-DFF6-DFT8
SS-R-DHL8-DHM6	SS-DR-DFF8-DFT6
SS-R-DHL8-DHM12	SS-DR-DFF8-DFT12
SS-R-DHL9-DHM12	SS-DR-DFF9-DFT12
SS-R-DHL12-DHM9	SS-DR-DFF12-DFT9
SS-P-DHL2	SS-DP-DFF2
SS-P-DHL4	SS-DP-DFF4
SS-P-DHL6	SS-DP-DFF6
SS-P-DHL8	SS-DP-DFF8
SS-P-DHL9	SS-DP-DFF9
SS-P-DHL12	SS-DP-DFF12
SS-AM-DHM4-NS4	SS-DAM-DFT4-NS4
SS-AM-DHM6-NS4	SS-DAM-DFT6-NS4
SS-AM-DHM6-NS8	SS-DAM-DFT6-NS8
SS-AM-DHM8-NS4	SS-DAM-DFT8-NS4
SS-AM-DHM8-NS8	SS-DAM-DFT8-NS8
SS-AM-DHM9-NS8	SS-DAM-DFT9-NS8
SS-AM-DHM12-NS12	SS-DAM-DFT12-NS12
SS-LU-DHL2	SS-DLU-DFF2

20D Series Tube Fittings

Formerly Used P/N	New P/N Adopted
SS-LU-DHL4	SS-DLU-DFF4
SS-LU-DHL6	SS-DLU-DFF6
SS-LU-DHL8	SS-DLU-DFF8
SS-LU-DHL9	SS-DLU-DFF9
SS-LU-DHL12	SS-DLU-DFF12
SS-LU-DHL4-DHL2	SS-DLU-DFF4-DFF2
SS-LU-DHL6-DHL2	SS-DLU-DFF6-DFF2
SS-LU-DHL6-DHL4	SS-DLU-DFF6-DFF4
SS-LU-DHL8-DHL4	SS-DLU-DFF8-DFF4
SS-LU-DHL8-DHL6	SS-DLU-DFF8-DFF6
SS-LU-DHL9-DHL8	SS-DLU-DFF9-DFF8
SS-LU-DHL12-DHL8	SS-DLU-DFF12-DFF8
SS-LM-DHL2-NS2	SS-DLM-DFF2-NS2
SS-LM-DHL2-NS4	SS-DLM-DFF2-NS4
SS-LM-DHL2-NS6	SS-DLM-DFF2-NS6
SS-LM-DHL4-NS4	SS-DLM-DFF4-NS4
SS-LM-DHL4-NS6	SS-DLM-DFF4-NS6
SS-LM-DHL4-NS8	SS-DLM-DFF4-NS8
SS-LM-DHL6-NS4	SS-DLM-DFF6-NS4
SS-LM-DHL6-NS6	SS-DLM-DFF6-NS6
SS-LM-DHL6-NS8	SS-DLM-DFF6-NS8
SS-LM-DHL8-NS4	SS-DLM-DFF8-NS4
SS-LM-DHL8-NS6	SS-DLM-DFF8-NS6
SS-LM-DHL8-NS8	SS-DLM-DFF8-NS8
SS-LM-DHL9-NS8	SS-DLM-DFF9-NS8
SS-LM-DHL12-NS8	SS-DLM-DFF12-NS8
SS-LM-DHL12-NS12	SS-DLM-DFF12-NS12
SS-TTT-DHL2	SS-DT-DFF2
SS-TTT-DHL4	SS-DT-DFF4
SS-TTT-DHL6	SS-DT-DFF6
SS-TTT-DHL8	SS-DT-DFF8
SS-TTT-DHL9	SS-DT-DFF9
SS-TTT-DHL12	SS-DT-DFF12
SS-TTM-DHL2-NS2	SS-DT-DFF2-DFF2-NS2
SS-TTM-DHL2-NS4	SS-DT-DFF2-DFF2-NS4
SS-TTM-DHL4-NS2	SS-DT-DFF4-DFF4-NS2
SS-TTM-DHL4-NS4	SS-DT-DFF4-DFF4-NS4
SS-TTM-DHL6-NS4	SS-DT-DFF6-DFF6-NS4
SS-TTM-DHL8-NS4	SS-DT-DFF8-DFF8-NS4
SS-TTM-DHL8-NS6	SS-DT-DFF8-DFF8-NS6
SS-TTM-DHL12-NS12	SS-DT-DFF12-DFF12-NS12
SS-C-DHL2	SS-DX-DFF2
SS-C-DHL4	SS-DX-DFF4
SS-C-DHL6	SS-DX-DFF6
SS-C-DHL9	SS-DX-DFF9
SS-C-DHL8	SS-DX-DFF8
SS-C-DHL12	SS-DX-DFF12
SS-N-DHL2	SS-N-DFF2
SS-N-DHL4	SS-N-DFF4
SS-N-DHL6	SS-N-DFF6
SS-N-DHL8	SS-N-DFF8
SS-N-DHL9	SS-N-DFF9
SS-N-DHL12	SS-N-DFF12
SS-FF-DHL2	SS-FF-DFF2
SS-FF-DHL4	SS-FF-DFF4
SS-FF-DHL6	SS-FF-DFF6
SS-FF-DHL8	SS-FF-DFF8
SS-FF-DHL9	SS-FF-DFF9
SS-FF-DHL12	SS-FF-DFF12
SS-RF-DHL2	SS-RF-DFF2
SS-RF-DHL4	SS-RF-DFF4
SS-RF-DHL6	SS-RF-DFF6
SS-RF-DHL8	SS-RF-DFF8
SS-RF-DHL9	SS-RF-DFF9
SS-RF-DHL12	SS-RF-DFF12
SS-TP-DHL2 SS-TP-DFF2	SS-DTP-DFF2
SS-TP-DHL4 SS-TP-DFF4	SS-DTP-DFF4
SS-TP-DHL6 SS-TP-DFF6	SS-DTP-DFF6
SS-TP-DHL8 SS-TP-DFF8	SS-DTP-DFF8
SS-TP-DHL9 SS-TP-DFF9	SS-DTP-DFF9

20D Series Tube Fittings

Formerly Used P/N	New P/N Adopted
SS-TP-DHL12 SS-TP-DFF12	SS-DTP-DFF12
SS-TC-DHL2	SS-DTC-DFF2
SS-TC-DHL4	SS-DTC-DFF4
SS-TC-DHL6	SS-DTC-DFF6
SS-TC-DHL8	SS-DTC-DFF8
SS-TC-DHL9	SS-DTC-DFF9
SS-TC-DHL12	SS-DTC-DFF12

20M Series Medium Pressure Fittings

Formerly Used P/N	New P/N Adopted
SS-G-2FH4	SS-MG-MF4
SS-G-2FH6	SS-MG-MF6
SS-G-2FH9	SS-MG-MF9
SS-G-2FH12	SS-MG-MF12
SS-G-2FH16	SS-MG-MF16
SS-CO-2FH4	SS-MCO-MF4
SS-CO-2FH6	SS-MCO-MF6
SS-CO-2FH9	SS-MCO-MF9
SS-CO-2FH12	SS-MCO-MF12
SS-CO-2FH16	SS-MCO-MF16
SS-TP-2FH4	SS-MTP-MF4
SS-TP-2FH6	SS-MTP-MF6
SS-TP-2FH9	SS-MTP-MF9
SS-TP-2FH12	SS-MTP-MF12
SS-TP-2FH16	SS-MTP-MF16
SS-TC-2FH4	SS-MTC-MF4
SS-TC-2FH6	SS-MTC-MF6
SS-TC-2FH9	SS-MTC-MF9
SS-TC-2FH12	SS-MTC-MF12
SS-TC-2FH16	SS-MTC-MF16
SS-U-2FH4	SS-MU-MF4
SS-U-2FH6	SS-MU-MF6
SS-U-2FH9	SS-MU-MF9
SS-U-2FH12	SS-MU-MF12
SS-U-2FH16	SS-MU-MF16
SS-U-2FH6-2FH4	SS-MU-MF6-MF4
SS-U-2FH9-2FH4	SS-MU-MF9-MF4
SS-U-2FH9-2FH6	SS-MU-MF9-MF6
SS-U-2FH12-2FH4	SS-MU-MF12-MF4
SS-U-2FH12-2FH6	SS-MU-MF12-MF6
SS-U-2FH12-2FH9	SS-MU-MF12-MF9
SS-U-2FH16-2FH4	SS-MU-MF16-MF4
SS-U-2FH16-2FH6	SS-MU-MF16-MF6
SS-U-2FH16-2FH9	SS-MU-MF16-MF9
SS-U-2FH16-2FH12	SS-MU-MF16-MF12
SS-SU-2FH4	SS-MSU-MF4
SS-SU-2FH6	SS-MSU-MF6
SS-SU-2FH9	SS-MSU-MF9
SS-SU-2FH12	SS-MSU-MF12
SS-SU-2FH16	SS-MSU-MF16
SS-BU-2FH4	SS-MBU-MF4
SS-BU-2FH6	SS-MBU-MF6
SS-BU-2FH9	SS-MBU-MF9
SS-BU-2FH12	SS-MBU-MF12
SS-BU-2FH16	SS-MBU-MF16
SS-LU-2FH4	SS-MLU-MF4
SS-LU-2FH6	SS-MLU-MF6
SS-LU-2FH9	SS-MLU-MF9
SS-LU-2FH12	SS-MLU-MF12
SS-LU-2FH16	SS-MLU-MF16
SS-TTT-2FH4	SS-MT-MF4
SS-TTT-2FH6	SS-MT-MF6
SS-TTT-2FH9	SS-MT-MF9
SS-TTT-2FH12	SS-MT-MF12
SS-TTT-2FH16	SS-MT-MF16
SS-C-2FH4	SS-MX-MF4
SS-C-2FH6	SS-MX-MF6
SS-C-2FH9	SS-MX-MF9
SS-C-2FH12	SS-MX-MF12

20M Series Medium Pressure Fittings

Formerly Used P/N	New P/N Adopted
SS-C-2FH16	SS-MX-MF16
SS-AVGA-2FH4	SS-MAV-MF4
SS-AVGA-2FH6	SS-MAV-MF6
SS-AVGA-2FH9	SS-MAV-MF9
SS-AVGA-2FH12	SS-MAV-MF12
SS-AVGA-2FH16	SS-MAV-MF16

60H Series High Pressure Fittings

Formerly Used P/N	New P/N Adopted
SS-G-6FH4	SS-HG-HF4
SS-G-6FH6	SS-HG-HF6
SS-G-6FH9	SS-HG-HF9
SS-CO-6FH4	SS-HCO-HF4
SS-CO-6FH6	SS-HCO-HF6
SS-CO-6FH9	SS-HCO-HF9
SS-TP-6FH4	SS-HTP-HF4
SS-TP-6FH6	SS-HTP-HF6
SS-TP-6FH9	SS-HTP-HF9
SS-TC-6FH4	SS-HTC-HF4
SS-TC-6FH6	SS-HTC-HF6
SS-TC-6FH9	SS-HTC-HF9
SS-U-6FH4 SS-HUN-HF4	SS-HU-HF4
SS-U-6FH6 SS-HUN-HF6	SS-HU-HF6
SS-U-6FH9 SS-HUN-HF9	SS-HU-HF9
SS-U-6FH6-6FH4 SS-HUN-HF6-HF4	SS-HU-HF6-HF4
SS-U-6FH9-6FH4 SS-HUN-HF9-HF4	SS-HU-HF9-HF4
SS-U-6FH9-6FH6 SS-HUN-HF9-HF6	SS-HU-HF9-HF6
SS-SU-6FH4	SS-HSU-HF4
SS-SU-6FH6	SS-HSU-HF6
SS-SU-6FH9	SS-HSU-HF9
SS-BU-6FH4	SS-HBU-HF4
SS-BU-6FH6	SS-HBU-HF6
SS-BU-6FH9	SS-HBU-HF9
SS-LU-6FH4	SS-HLU-HF4
SS-LU-6FH6	SS-HLU-HF6
SS-LU-6FH9	SS-HLU-HF9
SS-TTT-6FH4	SS-HT-HF4
SS-TTT-6FH6	SS-HT-HF6
SS-TTT-6FH9	SS-HT-HF9
SS-C-6FH4	SS-HX-HF4
SS-C-6FH6	SS-HX-HF6
SS-C-6FH9	SS-HX-HF9
SS-AVGA-6FH4	SS-HAV-HF4
SS-AVGA-6FH6	SS-HAV-HF6
SS-AVGA-6FH9	SS-HAV-HF9

PMH Series Pipe Fittings

Formerly Used P/N	New P/N Adopted
SS-HPP-AN4	SS-HPP-JM4
SS-HPP-AN6	SS-HPP-JM6
SS-HPP-AN8	SS-HPP-JM8
SS-HPP-AN10	SS-HPP-JM10
SS-HPP-AN12	SS-HPP-JM12
SS-HPP-AN16	SS-HPP-JM16
SS-HPP-HM9	SS-HPP-TM9
SS-HPP-HM12	SS-HPP-TM12
SS-HPP-HM14	SS-HPP-TM14
SS-HPP-HM16	SS-HPP-TM16
SS-HPP-HM21	SS-HPP-TM21
SS-HPHN-NS2	SS-HPN-NS2
SS-HPHN-NS4-NS2	SS-HPN-NS4-NS2
SS-HPHN-NS4	SS-HPN-NS4
SS-HPHN-NS6-NS2	SS-HPN-NS6-NS2
SS-HPHN-NS6-NS4	SS-HPN-NS6-NS4
SS-HPHN-NS6	SS-HPN-NS6
SS-HPHN-NS8-NS2	SS-HPN-NS8-NS2
SS-HPHN-NS8-NS4	SS-HPN-NS8-NS4
SS-HPHN-NS8-NS6	SS-HPN-NS8-NS6
SS-HPHN-NS8	SS-HPN-NS8
SS-HPHN-NS12-NS2	SS-HPN-NS12-NS2
SS-HPHN-NS12-NS4	SS-HPN-NS12-NS4
SS-HPHN-NS12-NS6	SS-HPN-NS12-NS6
SS-HPHN-NS12-NS8	SS-HPN-NS12-NS8
SS-HPHN-NS12	SS-HPN-NS12
SS-HPHN-NS16-NS2	SS-HPN-NS16-NS2
SS-HPHN-NS16-NS4	SS-HPN-NS16-NS4
SS-HPHN-NS16-NS6	SS-HPN-NS16-NS6
SS-HPHN-NS16-NS8	SS-HPN-NS16-NS8
SS-HPHN-NS16-NS12	SS-HPN-NS16-NS12
SS-HPHN-NS16	SS-HPN-NS16
SS-HPHN-NS2-RT2	SS-HPN-NS2-RT2
SS-HPHN-NS4-RT2	SS-HPN-NS4-RT2
SS-HPHN-NS4-RT4	SS-HPN-NS4-RT4
SS-HPHN-NS6-RT2	SS-HPN-NS6-RT2
SS-HPHN-NS6-RT4	SS-HPN-NS6-RT4
SS-HPHN-NS6-RT6	SS-HPN-NS6-RT6
SS-HPHN-NS8-RT2	SS-HPN-NS8-RT2
SS-HPHN-NS8-RT4	SS-HPN-NS8-RT4
SS-HPHN-NS8-RT6	SS-HPN-NS8-RT6
SS-HPHN-NS8-RT8	SS-HPN-NS8-RT8
SS-HPHN-NS12-RT2	SS-HPN-NS12-RT2
SS-HPHN-NS12-RT4	SS-HPN-NS12-RT4
SS-HPHN-NS12-RT6	SS-HPN-NS12-RT6
SS-HPHN-NS12-RT8	SS-HPN-NS12-RT8
SS-HPHN-NS12-RT12	SS-HPN-NS12-RT12
SS-HPHN-NS16-RT2	SS-HPN-NS16-RT2
SS-HPHN-NS16-RT4	SS-HPN-NS16-RT4
SS-HPHN-NS16-RT6	SS-HPN-NS16-RT6
SS-HPHN-NS16-RT8	SS-HPN-NS16-RT8
SS-HPHN-NS16-RT12	SS-HPN-NS16-RT12
SS-HPHN-NS16-RT16	SS-HPN-NS16-RT16
SS-HPHN-RT2	SS-HPN-RT2
SS-HPHN-RT4-RT2	SS-HPN-RT4-RT2
SS-HPHN-RT4	SS-HPN-RT4
SS-HPHN-RT6-RT2	SS-HPN-RT6-RT2
SS-HPHN-RT6-RT4	SS-HPN-RT6-RT4
SS-HPHN-RT6	SS-HPN-RT6
SS-HPHN-RT8-RT2	SS-HPN-RT8-RT2
SS-HPHN-RT8-RT4	SS-HPN-RT8-RT4
SS-HPHN-RT8-RT6	SS-HPN-RT8-RT6
SS-HPHN-RT8	SS-HPN-RT8
SS-HPHN-RT12-RT2	SS-HPN-RT12-RT2
SS-HPHN-RT12-RT4	SS-HPN-RT12-RT4
SS-HPHN-RT12-RT6	SS-HPN-RT12-RT6
SS-HPHN-RT12-RT8	SS-HPN-RT12-RT8
SS-HPHN-RT12	SS-HPN-RT12
SS-HPHN-RT16-RT2	SS-HPN-RT16-RT2
SS-HPHN-RT16-RT4	SS-HPN-RT16-RT4
SS-HPHN-RT16-RT6	SS-HPN-RT16-RT6
SS-HPHN-RT16-RT8	SS-HPN-RT16-RT8
SS-HPHN-RT16-RT12	SS-HPN-RT16-RT12
SS-HPHN-RT16	SS-HPN-RT16
SS-HPHN-NS2-AN4	SS-HPN-NS2-JM4
SS-HPHN-NS2-AN6	SS-HPN-NS2-JM6
SS-HPHN-NS4-AN4	SS-HPN-NS4-JM4
SS-HPHN-NS4-AN6	SS-HPN-NS4-JM6

PMH Series Pipe Fittings

Formerly Used P/N	New P/N Adopted
SS-HPHN-NS4-AN8	SS-HPN-NS4-JM8
SS-HPHN-NS6-AN4	SS-HPN-NS6-JM4
SS-HPHN-NS6-AN6	SS-HPN-NS6-JM6
SS-HPHN-NS6-AN8	SS-HPN-NS6-JM8
SS-HPHN-NS8-AN4	SS-HPN-NS8-JM4
SS-HPHN-NS8-AN6	SS-HPN-NS8-JM6
SS-HPHN-NS8-AN8	SS-HPN-NS8-JM8
SS-HPHN-NS8-AN10	SS-HPN-NS8-JM10
SS-HPHN-NS12-AN8	SS-HPN-NS12-JM8
SS-HPHN-NS12-AN10	SS-HPN-NS12-JM10
SS-HPHN-NS12-AN12	SS-HPN-NS12-JM12
SS-HPHN-NS12-AN16	SS-HPN-NS12-JM16
SS-HPHN-NS16-AN12	SS-HPN-NS16-JM12
SS-HPHN-NS16-AN16	SS-HPN-NS16-JM16
SS-HPHN-NS4-SH7	SS-HPN-NS4-SH7
SS-HPHN-NS6-SH7	SS-HPN-NS6-SH7
SS-HPHN-NS8-SH9	SS-HPN-NS8-SH9
SS-HPHN-NS12-SH9	SS-HPN-NS12-SH9
SS-HPHN-NS16-SH12	SS-HPN-NS16-SH12
SS-HPHN-NS4-SH9	SS-HPN-NS4-SH9
SS-HPHN-NS6-SH9	SS-HPN-NS6-SH9
SS-HPHN-NS6-SH12	SS-HPN-NS6-SH12
SS-HPHN-NS8-SH12	SS-HPN-NS8-SH12
SS-HPHN-NS12-SH12	SS-HPN-NS12-SH12
SS-HPHN-NS8-SH14	SS-HPN-NS8-SH14
SS-HPHN-NS12-SH14	SS-HPN-NS12-SH14
SS-HPHN-NS16-SH14	SS-HPN-NS16-SH14
SS-HPHN-NS2-HM9	SS-HPN-NS2-TM9
SS-HPHN-NS2-HM12	SS-HPN-NS2-TM12
SS-HPHN-NS4-HM9	SS-HPN-NS4-TM9
SS-HPHN-NS4-HM12	SS-HPN-NS4-TM12
SS-HPHN-NS4-HM14	SS-HPN-NS4-TM14
SS-HPHN-NS6-HM9	SS-HPN-NS6-TM9
SS-HPHN-NS6-HM12	SS-HPN-NS6-TM12
SS-HPHN-NS6-HM14	SS-HPN-NS6-TM14
SS-HPHN-NS8-HM9	SS-HPN-NS8-TM9
SS-HPHN-NS8-HM12	SS-HPN-NS8-TM12
SS-HPHN-NS8-HM14	SS-HPN-NS8-TM14
SS-HPHN-NS8-HM16	SS-HPN-NS8-TM16
SS-HPHN-NS12-HM9	SS-HPN-NS12-TM9
SS-HPHN-NS12-HM12	SS-HPN-NS12-TM12
SS-HPHN-NS12-HM14	SS-HPN-NS12-TM14
SS-HPHN-NS12-HM16	SS-HPN-NS12-TM16
SS-HPHN-NS16-HM16	SS-HPN-NS16-TM16
SS-HPHN-NS16-HM21	SS-HPN-NS16-TM21
SS-HPHN-HM9	SS-HPN-TM9
SS-HPHN-HM12-HM9	SS-HPN-TM12-TM9
SS-HPHN-HM12	SS-HPN-TM12
SS-HPHN-HM14-HM9	SS-HPN-TM14-TM9
SS-HPHN-HM14-HM12	SS-HPN-TM14-TM12
SS-HPHN-HM14	SS-HPN-TM14
SS-HPHN-HM16-HM9	SS-HPN-TM16-TM9
SS-HPHN-HM16-HM12	SS-HPN-TM16-TM12
SS-HPHN-HM16-HM14	SS-HPN-TM16-TM14
SS-HPHN-HM16	SS-HPN-TM16
SS-HPHN-HM21-HM16	SS-HPN-TM21-TM16
SS-HPHN-HM21	SS-HPN-TM21
SS-HPHN-AN4	SS-HPN-JM4
SS-HPHN-AN6	SS-HPN-JM6
SS-HPHN-AN8-AN6	SS-HPN-JM8-JM6
SS-HPHN-AN8	SS-HPN-JM8
SS-HPHN-AN6-AN4	SS-HPN-JM6-JM4
SS-HPHN-AN10-AN6	SS-HPN-JM10-JM6
SS-HPHN-AN10-AN8	SS-HPN-JM10-JM8
SS-HPHN-AN12-AN8	SS-HPN-JM12-JM8
SS-HPHN-AN12-AN10	SS-HPN-JM12-JM10
SS-HPHN-AN12	SS-HPN-JM12
SS-HPHN-AN10	SS-HPN-JM10
SS-HPHN-AN16	SS-HPN-JM16
SS-HPHN-AN16-AN10	SS-HPN-JM16-JM10
SS-HPHN-AN16-AN12	SS-HPN-JM16-JM12
SS-HPLN-NS2-1.5	SS-HPL-NS2-1.5
SS-HPLN-NS2-2	SS-HPL-NS2-2
SS-HPLN-NS2-2.5	SS-HPL-NS2-2.5
SS-HPLN-NS2-3	SS-HPL-NS2-3
SS-HPLN-NS4-2	SS-HPL-NS4-2
SS-HPLN-NS4-2.5	SS-HPL-NS4-2.5
SS-HPLN-NS4-3	SS-HPL-NS4-3

PMH Series Pipe Fittings

Formerly Used P/N	New P/N Adopted
SS-HPLN-NS8-4	SS-HPL-NS8-4
SS-HPLN-NS8-6	SS-HPL-NS8-6
SS-HPLN-NS12-3	SS-HPL-NS12-3
SS-HPLN-NS12-4	SS-HPL-NS12-4
SS-HPLN-NS12-6	SS-HPL-NS12-6
SS-HPLN-NS12-8	SS-HPL-NS12-8
SS-HPLN-NS16-3	SS-HPL-NS16-3
SS-HPLN-NS16-4	SS-HPL-NS16-4
SS-HPLN-NS16-6	SS-HPL-NS16-6
SS-HPLN-NS16-8	SS-HPL-NS16-8
SS-HPLN-RT2-1.5	SS-HPL-RT2-1.5
SS-HPLN-RT2-2	SS-HPL-RT2-2
SS-HPLN-RT2-2.5	SS-HPL-RT2-2.5
SS-HPLN-RT2-3	SS-HPL-RT2-3
SS-HPLN-RT4-2	SS-HPL-RT4-2
SS-HPLN-RT4-2.5	SS-HPL-RT4-2.5
SS-HPLN-RT4-3	SS-HPL-RT4-3
SS-HPLN-RT4-4	SS-HPL-RT4-4
SS-HPLN-RT6-2	SS-HPL-RT6-2
SS-HPLN-RT6-2.5	SS-HPL-RT6-2.5
SS-HPLN-RT6-3	SS-HPL-RT6-3
SS-HPLN-RT6-4	SS-HPL-RT6-4
SS-HPLN-RT8-3	SS-HPL-RT8-3
SS-HPLN-RT8-4	SS-HPL-RT8-4
SS-HPLN-RT8-6	SS-HPL-RT8-6
SS-HPLN-RT12-3	SS-HPL-RT12-3
SS-HPLN-RT12-4	SS-HPL-RT12-4
SS-HPLN-RT12-6	SS-HPL-RT12-6
SS-HPLN-RT12-8	SS-HPL-RT12-8
SS-HPLN-RT16-3	SS-HPL-RT16-3
SS-HPLN-RT16-4	SS-HPL-RT16-4
SS-HPLN-RT16-6	SS-HPL-RT16-6
SS-HPLN-RT16-8	SS-HPL-RT16-8
SS-HPC-AN4	SS-HPC-JF4
SS-HPC-AN6	SS-HPC-JF6
SS-HPC-AN8	SS-HPC-JF8
SS-HPC-AN10	SS-HPC-JF10
SS-HPC-AN12	SS-HPC-JF12
SS-HPC-AN16	SS-HPC-JF16
SS-HMC-AS4	SS-HMC-JF4
SS-HMC-AS6	SS-HMC-JF6
SS-HMC-AS8	SS-HMC-JF8
SS-HMC-AS10	SS-HMC-JF10
SS-HMC-AS12	SS-HMC-JF12
SS-HMC-AS16	SS-HMC-JF16
SS-HMC-HM9	SS-HMC-TM9
SS-HMC-HM12	SS-HMC-TM12
SS-HMC-HM14	SS-HMC-TM14
SS-HMC-HM16	SS-HMC-TM16
SS-HMC-HM21	SS-HMC-TM21
SS-HPCG-NS2	SS-HPG-FNS2
SS-HPCG-NS4-NS2	SS-HPG-FNS4-FNS2
SS-HPCG-NS4	SS-HPG-FNS4
SS-HPCG-NS6-NS2	SS-HPG-FNS6-FNS2
SS-HPCG-NS6-NS4	SS-HPG-FNS6-FNS4
SS-HPCG-NS6	SS-HPG-FNS6
SS-HPCG-NS8-NS2	SS-HPG-FNS8-FNS2
SS-HPCG-NS8-NS4	SS-HPG-FNS8-FNS4
SS-HPCG-NS8-NS6	SS-HPG-FNS8-FNS6
SS-HPCG-NS8	SS-HPG-FNS8
SS-HPCG-NS12-NS2	SS-HPG-FNS12-FNS2
SS-HPCG-NS12-NS4	SS-HPG-FNS12-FNS4
SS-HPCG-NS12-NS6	SS-HPG-FNS12-FNS6
SS-HPCG-NS12-NS8	SS-HPG-FNS12-FNS8
SS-HPCG-NS12	SS-HPG-FNS12
SS-HPCG-NS16-NS2	SS-HPG-FNS16-FNS2
SS-HPCG-NS16-NS4	SS-HPG-FNS16-FNS4
SS-HPCG-NS16-NS6	SS-HPG-FNS16-FNS6
SS-HPCG-NS16-NS8	SS-HPG-FNS16-FNS8
SS-HPCG-NS16-NS12	SS-HPG-FNS16-FNS12
SS-HPCG-NS16	SS-HPG-FNS16
SS-HPCG-NS2-RT2	SS-HPG-FNS2-FRT2
SS-HPCG-NS4-RT2	SS-HPG-FNS4-FRT2
SS-HPCG-NS4-RT4	SS-HPG-FNS4-FRT4
SS-HPCG-NS6-RT2	SS-HPG-FNS6-FRT2
SS-HPCG-NS6-RT4	SS-HPG-FNS6-FRT4
SS-HPCG-NS6-RT6	SS-HPG-FNS6-FRT6
SS-HPCG-NS8-RT2	SS-HPG-FNS8-FRT2

PMH Series Pipe Fittings

Formerly Used P/N	New P/N Adopted
SS-HPCG-NS8-RT4	SS-HPG-FNS8-FRT4
SS-HPCG-NS8-RT6	SS-HPG-FNS8-FRT6
SS-HPCG-NS8-RT8	SS-HPG-FNS8-FRT8
SS-HPCG-NS12-RT2	SS-HPG-FNS12-FRT2
SS-HPCG-NS12-RT4	SS-HPG-FNS12-FRT4
SS-HPCG-NS12-RT6	SS-HPG-FNS12-FRT6
SS-HPCG-NS12-RT8	SS-HPG-FNS12-FRT8
SS-HPCG-NS12-RT12	SS-HPG-FNS12-FRT12
SS-HPCG-NS16-RT2	SS-HPG-FNS16-FRT2
SS-HPCG-NS16-RT4	SS-HPG-FNS16-FRT4
SS-HPCG-NS16-RT6	SS-HPG-FNS16-FRT6
SS-HPCG-NS16-RT8	SS-HPG-FNS16-FRT8
SS-HPCG-NS16-RT12	SS-HPG-FNS16-FRT12
SS-HPCG-NS16-RT16	SS-HPG-FNS16-FRT16
SS-HPCG-RT2	SS-HPG-FRT2
SS-HPCG-RT4-RT2	SS-HPG-FRT4-FRT2
SS-HPCG-RT4	SS-HPG-FRT4
SS-HPCG-RT6-RT2	SS-HPG-FRT6-FRT2
SS-HPCG-RT6-RT4	SS-HPG-FRT6-FRT4
SS-HPCG-RT6	SS-HPG-FRT6
SS-HPCG-RT8-RT2	SS-HPG-FRT8-FRT2
SS-HPCG-RT8-RT4	SS-HPG-FRT8-FRT4
SS-HPCG-RT8-RT6	SS-HPG-FRT8-FRT6
SS-HPCG-RT8	SS-HPG-FRT8
SS-HPCG-RT12-RT2	SS-HPG-FRT12-FRT2
SS-HPCG-RT12-RT4	SS-HPG-FRT12-FRT4
SS-HPCG-RT12-RT6	SS-HPG-FRT12-FRT6
SS-HPCG-RT12-RT8	SS-HPG-FRT12-FRT8
SS-HPCG-RT12	SS-HPG-FRT12
SS-HPCG-RT16-RT2	SS-HPG-FRT16-FRT2
SS-HPCG-RT16-RT4	SS-HPG-FRT16-FRT4
SS-HPCG-RT16-RT6	SS-HPG-FRT16-FRT6
SS-HPCG-RT16-RT8	SS-HPG-FRT16-FRT8
SS-HPCG-RT16-RT12	SS-HPG-FRT16-FRT12
SS-HPCG-RT16	SS-HPG-FRT16
SS-HPCG-NS2-AN4	SS-HPG-FNS2-JF4
SS-HPCG-NS4-AN4	SS-HPG-FNS4-JF4
SS-HPCG-NS4-AN6	SS-HPG-FNS4-JF6
SS-HPCG-NS6-AN4	SS-HPG-FNS6-JF4
SS-HPCG-NS6-AN6	SS-HPG-FNS6-JF6
SS-HPCG-NS6-AN8	SS-HPG-FNS6-JF8
SS-HPCG-NS8-AN6	SS-HPG-FNS8-JF6
SS-HPCG-NS8-AN8	SS-HPG-FNS8-JF8
SS-HPCG-NS8-AN10	SS-HPG-FNS8-JF10
SS-HPCG-AN4	SS-HPG-JF4
SS-HPCG-AN6-AN4	SS-HPG-JF6-JF4
SS-HPCG-AN6	SS-HPG-JF6
SS-HPCG-AN8-AN6	SS-HPG-JF8-JF6
SS-HPCG-AN8	SS-HPG-JF8
SS-HPCG-AN10-AN8	SS-HPG-JF10-JF8
SS-HPCG-AN10	SS-HPG-JF10
SS-HPCG-AN12-AN10	SS-HPG-JF12-JF10
SS-HPCG-AN12	SS-HPG-JF12
SS-HPCG-AN16-AN12	SS-HPG-JF16-JF12
SS-HPCG-AN16	SS-HPG-JF16
SS-HPZC-NS2	SS-HPZ-FNS2
SS-HPZC-NS4	SS-HPZ-FNS4
SS-HPZC-NS6	SS-HPZ-FNS6
SS-HPZC-NS8	SS-HPZ-FNS8
SS-HPZC-NS12	SS-HPZ-FNS12
SS-HPA-NS2	SS-HPA-FNS2-NS2
SS-HPA-NS2-NS4	SS-HPA-FNS2-NS4
SS-HPA-NS2-NS6	SS-HPA-FNS2-NS6
SS-HPA-NS2-NS8	SS-HPA-FNS2-NS8
SS-HPA-NS2-NS12	SS-HPA-FNS2-NS12
SS-HPA-NS4-NS2	SS-HPA-FNS4-NS2
SS-HPA-NS4	SS-HPA-FNS4-NS4
SS-HPA-NS4-NS6	SS-HPA-FNS4-NS6
SS-HPA-NS4-NS8	SS-HPA-FNS4-NS8
SS-HPA-NS4-NS12	SS-HPA-FNS4-NS12
SS-HPA-NS4-NS16	SS-HPA-FNS4-NS16
SS-HPA-NS6-NS4	SS-HPA-FNS6-NS4
SS-HPA-NS6	SS-HPA-FNS6-NS6
SS-HPA-NS6-NS8	SS-HPA-FNS6-NS8
SS-HPA-NS6-NS12	SS-HPA-FNS6-NS12
SS-HPA-NS6-NS16	SS-HPA-FNS6-NS16
SS-HPA-NS8-NS4	SS-HPA-FNS8-NS4
SS-HPA-NS8-NS6	SS-HPA-FNS8-NS6

PMH Series Pipe Fittings

Formerly Used P/N	New P/N Adopted
SS-HPLN-NS4-4	SS-HPL-NS4-4
SS-HPLN-NS6-2	SS-HPL-NS6-2
SS-HPLN-NS6-2.5	SS-HPL-NS6-2.5
SS-HPLN-NS6-3	SS-HPL-NS6-3
SS-HPLN-NS6-4	SS-HPL-NS6-4
SS-HPLN-NS8-3	SS-HPL-NS8-3
SS-HPLN-NS8-4	SS-HPL-NS8-4
SS-HPLN-NS8-6	SS-HPL-NS8-6
SS-HPLN-NS12-3	SS-HPL-NS12-3
SS-HPLN-NS12-4	SS-HPL-NS12-4
SS-HPLN-NS12-6	SS-HPL-NS12-6
SS-HPLN-NS12-8	SS-HPL-NS12-8
SS-HPLN-NS16-3	SS-HPL-NS16-3
SS-HPLN-NS16-4	SS-HPL-NS16-4
SS-HPLN-NS16-6	SS-HPL-NS16-6
SS-HPLN-NS16-8	SS-HPL-NS16-8
SS-HPLN-RT2-1.5	SS-HPL-RT2-1.5
SS-HPLN-RT2-2	SS-HPL-RT2-2
SS-HPLN-RT2-2.5	SS-HPL-RT2-2.5
SS-HPLN-RT2-3	SS-HPL-RT2-3
SS-HPLN-RT4-2	SS-HPL-RT4-2
SS-HPLN-RT4-2.5	SS-HPL-RT4-2.5
SS-HPLN-RT4-3	SS-HPL-RT4-3
SS-HPLN-RT4-4	SS-HPL-RT4-4
SS-HPLN-RT6-2	SS-HPL-RT6-2
SS-HPLN-RT6-2.5	SS-HPL-RT6-2.5
SS-HPLN-RT6-3	SS-HPL-RT6-3
SS-HPLN-RT6-4	SS-HPL-RT6-4
SS-HPLN-RT8-3	SS-HPL-RT8-3
SS-HPLN-RT8-4	SS-HPL-RT8-4
SS-HPLN-RT8-6	SS-HPL-RT8-6
SS-HPLN-RT12-3	SS-HPL-RT12-3
SS-HPLN-RT12-4	SS-HPL-RT12-4
SS-HPLN-RT12-6	SS-HPL-RT12-6
SS-HPLN-RT12-8	SS-HPL-RT12-8
SS-HPLN-RT16-3	SS-HPL-RT16-3
SS-HPLN-RT16-4	SS-HPL-RT16-4
SS-HPLN-RT16-6	SS-HPL-RT16-6
SS-HPLN-RT16-8	SS-HPL-RT16-8
SS-HPC-AN4	SS-HPC-JF4
SS-HPC-AN6	SS-HPC-JF6
SS-HPC-AN8	SS-HPC-JF8
SS-HPC-AN10	SS-HPC-JF10
SS-HPC-AN12	SS-HPC-JF12
SS-HPC-AN16	SS-HPC-JF16
SS-HMC-AS4	SS-HMC-JF4
SS-HMC-AS6	SS-HMC-JF6
SS-HMC-AS8	SS-HMC-JF8
SS-HMC-AS10	SS-HMC-JF10
SS-HMC-AS12	SS-HMC-JF12
SS-HMC-AS16	SS-HMC-JF16
SS-HMC-HM9	SS-HMC-TM9
SS-HMC-HM12	SS-HMC-TM12
SS-HMC-HM14	SS-HMC-TM14
SS-HMC-HM16	SS-HMC-TM16
SS-HMC-HM21	SS-HMC-TM21
SS-HPCG-NS2	SS-HPG-FNS2
SS-HPCG-NS4-NS2	SS-HPG-FNS4-FNS2
SS-HPCG-NS4	SS-HPG-FNS4
SS-HPCG-NS6-NS2	SS-HPG-FNS6-FNS2
SS-HPCG-NS6-NS4	SS-HPG-FNS6-FNS4
SS-HPCG-NS6	SS-HPG-FNS6
SS-HPCG-NS8-NS2	SS-HPG-FNS8-FNS2
SS-HPCG-NS8-NS4	SS-HPG-FNS8-FNS4
SS-HPCG-NS8-NS6	SS-HPG-FNS8-FNS6
SS-HPCG-NS8	SS-HPG-FNS8
SS-HPCG-NS12-NS2	SS-HPG-FNS12-FNS2
SS-HPCG-NS12-NS4	SS-HPG-FNS12-FNS4
SS-HPCG-NS12-NS6	SS-HPG-FNS12-FNS6
SS-HPCG-NS12-NS8	SS-HPG-FNS12-FNS8
SS-HPCG-NS12	SS-HPG-FNS12
SS-HPCG-NS16-NS2	SS-HPG-FNS16-FNS2
SS-HPCG-NS16-NS4	SS-HPG-FNS16-FNS4
SS-HPCG-NS16-NS6	SS-HPG-FNS16-FNS6
SS-HPCG-NS16-NS8	SS-HPG-FNS16-FNS8
SS-HPCG-NS16-NS12	SS-HPG-FNS16-FNS12
SS-HPCG-NS16	SS-HPG-FNS16
SS-HPCG-NS2-RT2	SS-HPG-FNS2-FRT2

PMH Series Pipe Fittings

Formerly Used P/N	New P/N Adopted
SS-HPCG-NS4-RT2	SS-HPG-FNS4-FRT2
SS-HPCG-NS4-RT4	SS-HPG-FNS4-FRT4
SS-HPCG-NS6-RT2	SS-HPG-FNS6-FRT2
SS-HPCG-NS6-RT4	SS-HPG-FNS6-FRT4
SS-HPCG-NS6-RT6	SS-HPG-FNS6-FRT6
SS-HPCG-NS8-RT2	SS-HPG-FNS8-FRT2
SS-HPA-RT6-NS16	SS-HPA-FRT6-NS16
SS-HPA-RT8-NS4	SS-HPA-FRT8-NS4
SS-HPA-RT8-NS6	SS-HPA-FRT8-NS6
SS-HPA-RT8-NS8	SS-HPA-FRT8-NS8
SS-HPA-RT8-NS12	SS-HPA-FRT8-NS12
SS-HPA-RT8-NS16	SS-HPA-FRT8-NS16
SS-HPA-RT12-NS8	SS-HPA-FRT12-NS8
SS-HPA-RT12-NS12	SS-HPA-FRT12-NS12
SS-HPA-RT12-NS16	SS-HPA-FRT12-NS16
SS-HPA-RT16-NS8	SS-HPA-FRT16-NS8
SS-HPA-RT16-NS12	SS-HPA-FRT16-NS12
SS-HPA-RT16-NS16	SS-HPA-FRT16-NS16
SS-HPA-NS2-AN4	SS-HPA-FNS2-JM4
SS-HPA-NS4-AN4	SS-HPA-FNS4-JM4
SS-HPA-NS4-AN6	SS-HPA-FNS4-JM6
SS-HPA-NS6-AN6	SS-HPA-FNS6-JM6
SS-HPA-NS6-AN8	SS-HPA-FNS6-JM8
SS-HPA-NS8-AN8	SS-HPA-FNS8-JM8
SS-HPA-NS8-AN10	SS-HPA-FNS8-JM10
SS-HPA-NS8-AN12	SS-HPA-FNS8-JM12
SS-HPA-NS12-AN12	SS-HPA-FNS12-JM12
SS-HPA-NS16-AN16	SS-HPA-FNS16-JM16
SS-HPA-NS4-SH7	SS-HPA-FNS4-SH7
SS-HPA-NS6-SH9	SS-HPA-FNS6-SH9
SS-HPA-NS8-SH12	SS-HPA-FNS8-SH12
SS-HPA-NS12-SH14	SS-HPA-FNS12-SH14
SS-HPA-NS2-HM9	SS-HPA-FNS2-TM9
SS-HPA-NS4-HM9	SS-HPA-FNS4-TM9
SS-HPA-NS4-HM12	SS-HPA-FNS4-TM12
SS-HPA-NS6-HM9	SS-HPA-FNS6-TM9
SS-HPA-NS6-HM12	SS-HPA-FNS6-TM12
SS-HPA-NS8-HM9	SS-HPA-FNS8-TM9
SS-HPA-NS8-HM12	SS-HPA-FNS8-TM12
SS-HPA-NS8-HM14	SS-HPA-FNS8-TM14
SS-HPA-NS12-HM16	SS-HPA-FNS12-TM16
SS-HPA-NS16-HM21	SS-HPA-FNS16-TM21
SS-HPA-US7-SH9	SS-HPA-US7-SH9
SS-HPA-US7-SH12	SS-HPA-US7-SH12
SS-HPA-US9-SH12	SS-HPA-US9-SH12
SS-HPA-US9-SH14	SS-HPA-US9-SH14
SS-HPA-US12-SH14	SS-HPA-US12-SH14
SS-HPME-NS2	SS-HPE-NS2
SS-HPME-NS4	SS-HPE-NS4
SS-HPME-NS6	SS-HPE-NS6
SS-HPME-NS8	SS-HPE-NS8
SS-HPME-NS12	SS-HPE-NS12
SS-HPME-NS16	SS-HPE-NS16
SS-HPME-RT2	SS-HPE-RT2
SS-HPME-RT4	SS-HPE-RT4
SS-HPME-RT6	SS-HPE-RT6
SS-HPME-RT8	SS-HPE-RT8
SS-HPME-RT12	SS-HPE-RT12
SS-HPME-RT16	SS-HPE-RT16
SS-HPSE-NS2	SS-HPE-FNS2-NS2
SS-HPSE-NS2-NS4	SS-HPE-FNS2-NS4
SS-HPSE-NS2-NS6	SS-HPE-FNS2-NS6
SS-HPSE-NS4	SS-HPE-FNS4-NS4
SS-HPSE-NS4-NS6	SS-HPE-FNS4-NS6
SS-HPSE-NS4-NS8	SS-HPE-FNS4-NS8
SS-HPSE-NS6	SS-HPE-FNS6-NS6
SS-HPSE-NS6-NS8	SS-HPE-FNS6-NS8
SS-HPSE-NS6-NS12	SS-HPE-FNS6-NS12
SS-HPSE-NS8	SS-HPE-FNS8-NS8
SS-HPSE-NS8-NS12	SS-HPE-FNS8-NS12
SS-HPSE-NS8-NS16	SS-HPE-FNS8-NS16
SS-HPSE-NS12	SS-HPE-FNS12-NS12
SS-HPSE-NS12-NS16	SS-HPE-FNS12-NS16
SS-HPSE-NS16	SS-HPE-FNS16-NS16
SS-HPSE-RT2	SS-HPE-FRT2-RT2
SS-HPSE-RT2-RT4	SS-HPE-FRT2-RT4
SS-HPSE-RT2-RT6	SS-HPE-FRT2-RT6
SS-HPSE-RT4	SS-HPE-FRT4-RT4

PMH Series Pipe Fittings

Formerly Used P/N	New P/N Adopted
SS-HPSE-RT4-RT6	SS-HPE-FRT4-RT6
SS-HPSE-RT4-RT8	SS-HPE-FRT4-RT8
SS-HPSE-RT6	SS-HPE-FRT6-RT6
SS-HPSE-RT6-RT8	SS-HPE-FRT6-RT8
SS-HPSE-RT6-RT12	SS-HPE-FRT6-RT12
SS-HPSE-RT8	SS-HPE-FRT8-RT8
SS-HPSE-RT8-RT12	SS-HPE-FRT8-RT12
SS-HPSE-RT8-RT16	SS-HPE-FRT8-RT16
SS-HPSE-RT12	SS-HPE-FRT12-RT12
SS-HPSE-RT12-RT16	SS-HPE-FRT12-RT16
SS-HPSE-RT16	SS-HPE-FRT16-RT16
SS-HPE-NS2	SS-HPE-FNS2
SS-HPE-NS4	SS-HPE-FNS4
SS-HPE-NS6	SS-HPE-FNS6
SS-HPE-NS8	SS-HPE-FNS8
SS-HPE-NS12	SS-HPE-FNS12
SS-HPE-NS16	SS-HPE-FNS16
SS-HPE-RT2	SS-HPE-FRT2
SS-HPE-RT4	SS-HPE-FRT4
SS-HPE-RT6	SS-HPE-FRT6
SS-HPE-RT8	SS-HPE-FRT8
SS-HPE-RT12	SS-HPE-FRT12
SS-HPE-RT16	SS-HPE-FRT16
SS-HPMT-NS2	SS-HPT-NS2
SS-HPMT-NS4	SS-HPT-NS4
SS-HPMT-NS6	SS-HPT-NS6
SS-HPMT-NS8	SS-HPT-NS8
SS-HPMT-NS12	SS-HPT-NS12
SS-HPMT-NS16	SS-HPT-NS16
SS-HPMT-RT2	SS-HPT-RT2
SS-HPMT-RT4	SS-HPT-RT4
SS-HPMT-RT6	SS-HPT-RT6
SS-HPMT-RT8	SS-HPT-RT8
SS-HPMT-RT12	SS-HPT-RT12
SS-HPMT-RT16	SS-HPT-RT16
SS-HPST-NS2	SS-HPT-FNS2-NS2-FNS2
SS-HPST-NS4	SS-HPT-FNS4-NS4-FNS4
SS-HPST-NS6	SS-HPT-FNS6-NS6-FNS6
SS-HPST-NS8	SS-HPT-FNS8-NS8-FNS8
SS-HPST-NS12	SS-HPT-FNS12-NS12-FNS12
SS-HPST-NS16	SS-HPT-FNS16-NS16-FNS16
SS-HPST-RT2	SS-HPT-FRT2-RT2-FRT2
SS-HPST-RT4	SS-HPT-FRT4-RT4-FRT4
SS-HPST-RT6	SS-HPT-FRT6-RT6-FRT6
SS-HPST-RT8	SS-HPT-FRT8-RT8-FRT8
SS-HPST-RT12	SS-HPT-FRT12-RT12-FRT12
SS-HPST-RT16	SS-HPT-FRT16-RT16-FRT16
SS-HPBT-NS2	SS-HPT-FNS2-FNS2-NS2
SS-HPBT-NS4	SS-HPT-FNS4-FNS4-NS4
SS-HPBT-NS6	SS-HPT-FNS6-FNS6-NS6
SS-HPBT-NS8	SS-HPT-FNS8-FNS8-NS8
SS-HPBT-NS12	SS-HPT-FNS12-FNS12-NS12
SS-HPBT-NS16	SS-HPT-FNS16-FNS16-NS16
SS-HPBT-RT2	SS-HPT-FRT2-FRT2-RT2
SS-HPBT-RT4	SS-HPT-FRT4-FRT4-RT4
SS-HPBT-RT6	SS-HPT-FRT6-FRT6-RT6
SS-HPBT-RT8	SS-HPT-FRT8-FRT8-RT8
SS-HPBT-RT12	SS-HPT-FRT12-FRT12-RT12
SS-HPBT-RT16	SS-HPT-FRT16-FRT16-RT16
SS-HPT-NS2	SS-HPT-FNS2
SS-HPT-NS4	SS-HPT-FNS4
SS-HPT-NS6	SS-HPT-FNS6
SS-HPT-NS8	SS-HPT-FNS8
SS-HPT-NS12	SS-HPT-FNS12
SS-HPT-NS16	SS-HPT-FNS16
SS-HPT-RT2	SS-HPT-FRT2
SS-HPT-RT4	SS-HPT-FRT4
SS-HPT-RT6	SS-HPT-FRT6
SS-HPT-RT8	SS-HPT-FRT8
SS-HPT-RT12	SS-HPT-FRT12
SS-HPT-RT16	SS-HPT-FRT16
SS-HPCR-NS2	SS-HPX-FNS2
SS-HPCR-NS4	SS-HPX-FNS4
SS-HPCR-NS6	SS-HPX-FNS6
SS-HPCR-NS8	SS-HPX-FNS8
SS-HPCR-NS12	SS-HPX-FNS12
SS-HPCR-NS16	SS-HPX-FNS16
SS-HPCR-RT2	SS-HPX-FRT2

PMH Series Pipe Fittings

Formerly Used P/N	New P/N Adopted
SS-HPCR-RT4	SS-HPX-FRT4
SS-HPCR-RT6	SS-HPX-FRT6
SS-HPCR-RT8	SS-HPX-FRT8
SS-HPCR-RT12	SS-HPX-FRT12
SS-HPCR-RT16	SS-HPX-FRT16

AMH Series Adapter Fittings

Formerly Used P/N	New P/N Adopted
SS-FFC-6FH4-2FH4	SS-FFC-HF4-MF4
SS-FFC-6FH4-2FH6	SS-FFC-HF4-MF6
SS-FFC-6FH4-2FH9	SS-FFC-HF4-MF9
SS-FFC-6FH4-2FH12	SS-FFC-HF4-MF12
SS-FFC-6FH4-2FH16	SS-FFC-HF4-MF16
SS-FFC-6FH6-2FH4	SS-FFC-HF6-MF4
SS-FFC-6FH6-2FH6	SS-FFC-HF6-MF6
SS-FFC-6FH6-2FH9	SS-FFC-HF6-MF9
SS-FFC-6FH6-2FH12	SS-FFC-HF6-MF12
SS-FFC-6FH6-2FH16	SS-FFC-HF6-MF16
SS-FFC-6FH9-2FH4	SS-FFC-HF9-MF4
SS-FFC-6FH9-2FH6	SS-FFC-HF9-MF6
SS-FFC-6FH9-2FH9	SS-FFC-HF9-MF9
SS-FFC-6FH9-2FH12	SS-FFC-HF9-MF12
SS-FFC-6FH9-2FH16	SS-FFC-HF9-MF16
SS-FFC-6FH4-DHL2	SS-FFC-HF4-DFF2
SS-FFC-6FH4-DHL4	SS-FFC-HF4-DFF4
SS-FFC-6FH4-DHL6	SS-FFC-HF4-DFF6
SS-FFC-6FH4-DHL8	SS-FFC-HF4-DFF8
SS-FFC-6FH6-DHL2	SS-FFC-HF6-DFF2
SS-FFC-6FH6-DHL4	SS-FFC-HF6-DFF4
SS-FFC-6FH6-DHL6	SS-FFC-HF6-DFF6
SS-FFC-6FH6-DHL8	SS-FFC-HF6-DFF8
SS-FFC-6FH9-DHL2	SS-FFC-HF9-DFF2
SS-FFC-6FH9-DHL4	SS-FFC-HF9-DFF4
SS-FFC-6FH9-DHL6	SS-FFC-HF9-DFF6
SS-FFC-6FH9-DHL8	SS-FFC-HF9-DFF8
SS-FFC-6FH4-NS2	SS-FFC-HF4-FNS2
SS-FFC-6FH4-NS4	SS-FFC-HF4-FNS4
SS-FFC-6FH4-NS6	SS-FFC-HF4-FNS6
SS-FFC-6FH4-NS8	SS-FFC-HF4-FNS8
SS-FFC-6FH4-NS12	SS-FFC-HF4-FNS12
SS-FFC-6FH4-NS16	SS-FFC-HF4-FNS16
SS-FFC-6FH6-NS2	SS-FFC-HF6-FNS2
SS-FFC-6FH6-NS4	SS-FFC-HF6-FNS4
SS-FFC-6FH6-NS6	SS-FFC-HF6-FNS6
SS-FFC-6FH6-NS8	SS-FFC-HF6-FNS8
SS-FFC-6FH6-NS12	SS-FFC-HF6-FNS12
SS-FFC-6FH6-NS16	SS-FFC-HF6-FNS16
SS-FFC-6FH9-NS2	SS-FFC-HF9-FNS2
SS-FFC-6FH9-NS4	SS-FFC-HF9-FNS4
SS-FFC-6FH9-NS6	SS-FFC-HF9-FNS6
SS-FFC-6FH9-NS8	SS-FFC-HF9-FNS8
SS-FFC-6FH9-NS12	SS-FFC-HF9-FNS12
SS-FFC-6FH9-NS16	SS-FFC-HF9-FNS16
SS-FFC-2FH4-DHL2	SS-FFC-MF4-DFF2
SS-FFC-2FH4-DHL4	SS-FFC-MF4-DFF4
SS-FFC-2FH4-DHL6	SS-FFC-MF4-DFF6
SS-FFC-2FH4-DHL8	SS-FFC-MF4-DFF8
SS-FFC-2FH6-DHL2	SS-FFC-MF6-DFF2
SS-FFC-2FH6-DHL4	SS-FFC-MF6-DFF4
SS-FFC-2FH6-DHL6	SS-FFC-MF6-DFF6
SS-FFC-2FH6-DHL8	SS-FFC-MF6-DFF8
SS-FFC-2FH9-DHL2	SS-FFC-MF9-DFF2
SS-FFC-2FH9-DHL4	SS-FFC-MF9-DFF4
SS-FFC-2FH9-DHL6	SS-FFC-MF9-DFF6
SS-FFC-2FH9-DHL8	SS-FFC-MF9-DFF8
SS-FFC-2FH12-DHL6	SS-FFC-MF12-DFF6
SS-FFC-2FH12-DHL8	SS-FFC-MF12-DFF8
SS-FFC-2FH16-DHL8	SS-FFC-MF16-DFF8
SS-FFC-2FH4-NS2	SS-FFC-MF4-FNS2
SS-FFC-2FH4-NS4	SS-FFC-MF4-FNS4
SS-FFC-2FH4-NS6	SS-FFC-MF4-FNS6
SS-FFC-2FH4-NS8	SS-FFC-MF4-FNS8
SS-FFC-2FH6-NS2	SS-FFC-MF6-FNS2
SS-FFC-2FH6-NS4	SS-FFC-MF6-FNS4

AMH Series Adapter Fittings

Formerly Used P/N	New P/N Adopted
SS-FFC-2FH6-NS6	SS-FFC-MF6-FNS6
SS-FFC-2FH6-NS8	SS-FFC-MF6-FNS8
SS-FFC-2FH6-NS12	SS-FFC-MF6-FNS12
SS-FFC-2FH9-NS2	SS-FFC-MF9-FNS2
SS-FFC-2FH9-NS4	SS-FFC-MF9-FNS4
SS-FFC-2FH9-NS6	SS-FFC-MF9-FNS6
SS-FFC-2FH9-NS8	SS-FFC-MF9-FNS8
SS-FFC-2FH9-NS12	SS-FFC-MF9-FNS12
SS-FFC-2FH9-NS16	SS-FFC-MF9-FNS16
SS-FFC-2FH12-NS2	SS-FFC-MF12-FNS2
SS-FFC-2FH12-NS4	SS-FFC-MF12-FNS4
SS-FFC-2FH12-NS6	SS-FFC-MF12-FNS6
SS-FFC-2FH12-NS8	SS-FFC-MF12-FNS8
SS-FFC-2FH12-NS12	SS-FFC-MF12-FNS12
SS-FFC-2FH12-NS16	SS-FFC-MF12-FNS16
SS-FFC-2FH16-NS4	SS-FFC-MF16-FNS4
SS-FFC-2FH16-NS6	SS-FFC-MF16-FNS6
SS-FFC-2FH16-NS8	SS-FFC-MF16-FNS8
SS-FFC-2FH16-NS12	SS-FFC-MF16-FNS12
SS-FFC-2FH16-NS16	SS-FFC-MF16-FNS16
SS-FMA-6FH4-6MP4	SS-FMA-HF4-HM4
SS-FMA-6FH4-6MP6	SS-FMA-HF4-HM6
SS-FMA-6FH4-6MP9	SS-FMA-HF4-HM9
SS-FMA-6FH6-6MP4	SS-FMA-HF6-HM4
SS-FMA-6FH6-6MP6	SS-FMA-HF6-HM6
SS-FMA-6FH6-6MP9	SS-FMA-HF6-HM9
SS-FMA-6FH9-6MP4	SS-FMA-HF9-HM4
SS-FMA-6FH9-6MP6	SS-FMA-HF9-HM6
SS-FMA-6FH9-6MP9	SS-FMA-HF9-HM9
SS-FMA-6FH4-6CT4	SS-FMA-HF4-HCT4
SS-FMA-6FH4-6CT6	SS-FMA-HF4-HCT6
SS-FMA-6FH4-6CT9	SS-FMA-HF4-HCT9
SS-FMA-6FH6-6CT4	SS-FMA-HF6-HCT4
SS-FMA-6FH6-6CT6	SS-FMA-HF6-HCT6
SS-FMA-6FH6-6CT9	SS-FMA-HF6-HCT9
SS-FMA-6FH9-6CT4	SS-FMA-HF9-HCT4
SS-FMA-6FH9-6CT6	SS-FMA-HF9-HCT6
SS-FMA-6FH9-6CT9	SS-FMA-HF9-HCT9
SS-FMA-6FH4-2MP4	SS-FMA-HF4-MM4
SS-FMA-6FH4-2MP6	SS-FMA-HF4-MM6
SS-FMA-6FH4-2MP9	SS-FMA-HF4-MM9
SS-FMA-6FH4-2MP12	SS-FMA-HF4-MM12
SS-FMA-6FH4-2MP16	SS-FMA-HF4-MM16
SS-FMA-6FH6-2MP4	SS-FMA-HF6-MM4
SS-FMA-6FH6-2MP6	SS-FMA-HF6-MM6
SS-FMA-6FH6-2MP9	SS-FMA-HF6-MM9
SS-FMA-6FH6-2MP12	SS-FMA-HF6-MM12
SS-FMA-6FH6-2MP16	SS-FMA-HF6-MM16
SS-FMA-6FH9-2MP4	SS-FMA-HF9-MM4
SS-FMA-6FH9-2MP6	SS-FMA-HF9-MM6
SS-FMA-6FH9-2MP9	SS-FMA-HF9-MM9
SS-FMA-6FH9-2MP12	SS-FMA-HF9-MM12
SS-FMA-6FH9-2MP16	SS-FMA-HF9-MM16
SS-FMA-6FH4-DMP2	SS-FMA-HF4-DFM2
SS-FMA-6FH4-DMP4	SS-FMA-HF4-DFM4
SS-FMA-6FH4-DMP6	SS-FMA-HF4-DFM6
SS-FMA-6FH4-DMP8	SS-FMA-HF4-DFM8
SS-FMA-6FH6-DMP2	SS-FMA-HF6-DFM2
SS-FMA-6FH6-DMP4	SS-FMA-HF6-DFM4
SS-FMA-6FH6-DMP6	SS-FMA-HF6-DFM6
SS-FMA-6FH6-DMP8	SS-FMA-HF6-DFM8
SS-FMA-6FH9-DMP2	SS-FMA-HF9-DFM2
SS-FMA-6FH9-DMP4	SS-FMA-HF9-DFM4
SS-FMA-6FH9-DMP6	SS-FMA-HF9-DFM6
SS-FMA-6FH9-DMP8	SS-FMA-HF9-DFM8
SS-FMA-6FH4-NS2	SS-FMA-HF4-NS2
SS-FMA-6FH4-NS4	SS-FMA-HF4-NS4
SS-FMA-6FH4-NS6	SS-FMA-HF4-NS6
SS-FMA-6FH4-NS8	SS-FMA-HF4-NS8
SS-FMA-6FH4-NS12	SS-FMA-HF4-NS12
SS-FMA-6FH6-NS2	SS-FMA-HF6-NS2
SS-FMA-6FH6-NS4	SS-FMA-HF6-NS4
SS-FMA-6FH6-NS6	SS-FMA-HF6-NS6
SS-FMA-6FH6-NS8	SS-FMA-HF6-NS8
SS-FMA-6FH6-NS12	SS-FMA-HF6-NS12
SS-FMA-6FH6-NS16	SS-FMA-HF6-NS16
SS-FMA-6FH9-NS2	SS-FMA-HF9-NS2
SS-FMA-6FH9-NS4	SS-FMA-HF9-NS4

AMH Series Adapter Fittings

Formerly Used P/N	New P/N Adopted
SS-FMA-6FH9-NS6	SS-FMA-HF9-NS6
SS-FMA-6FH9-NS8	SS-FMA-HF9-NS8
SS-FMA-6FH9-NS12	SS-FMA-HF9-NS12
SS-FMA-6FH9-NS16	SS-FMA-HF9-NS16
SS-FMA-6FH4-HM9	SS-FMA-HF4-TM9
SS-FMA-6FH4-HM12	SS-FMA-HF4-TM12
SS-FMA-6FH4-HM14	SS-FMA-HF4-TM14
SS-FMA-6FH4-HM16	SS-FMA-HF4-TM16
SS-FMA-6FH6-HM9	SS-FMA-HF6-TM9
SS-FMA-6FH6-HM12	SS-FMA-HF6-TM12
SS-FMA-6FH6-HM14	SS-FMA-HF6-TM14
SS-FMA-6FH6-HM16	SS-FMA-HF6-TM16
SS-FMA-6FH6-HM21	SS-FMA-HF6-TM21
SS-FMA-6FH9-HM14	SS-FMA-HF9-TM14
SS-FMA-6FH9-HM16	SS-FMA-HF9-TM16
SS-FMA-6FH9-HM21	SS-FMA-HF9-TM21
SS-FMA-2FH4-6MP4	SS-FMA-MF4-HM4
SS-FMA-2FH4-6MP6	SS-FMA-MF4-HM6
SS-FMA-2FH4-6MP9	SS-FMA-MF4-HM9
SS-FMA-2FH6-6MP4	SS-FMA-MF6-HM4
SS-FMA-2FH6-6MP6	SS-FMA-MF6-HM6
SS-FMA-2FH6-6MP9	SS-FMA-MF6-HM9
SS-FMA-2FH9-6MP4	SS-FMA-MF9-HM4
SS-FMA-2FH9-6MP6	SS-FMA-MF9-HM6
SS-FMA-2FH9-6MP9	SS-FMA-MF9-HM9
SS-FMA-2FH12-6MP4	SS-FMA-MF12-HM4
SS-FMA-2FH12-6MP6	SS-FMA-MF12-HM6
SS-FMA-2FH12-6MP9	SS-FMA-MF12-HM9
SS-FMA-2FH16-6MP4	SS-FMA-MF16-HM4
SS-FMA-2FH16-6MP6	SS-FMA-MF16-HM6
SS-FMA-2FH16-6MP9	SS-FMA-MF16-HM9
SS-FMA-2FH4-2MP4	SS-FMA-MF4-MM4
SS-FMA-2FH4-2MP6	SS-FMA-MF4-MM6
SS-FMA-2FH4-2MP9	SS-FMA-MF4-MM9
SS-FMA-2FH4-2MP12	SS-FMA-MF4-MM12
SS-FMA-2FH4-2MP16	SS-FMA-MF4-MM16
SS-FMA-2FH6-2MP4	SS-FMA-MF6-MM4
SS-FMA-2FH6-2MP6	SS-FMA-MF6-MM6
SS-FMA-2FH6-2MP9	SS-FMA-MF6-MM9
SS-FMA-2FH6-2MP12	SS-FMA-MF6-MM12
SS-FMA-2FH6-2MP16	SS-FMA-MF6-MM16
SS-FMA-2FH9-2MP4	SS-FMA-MF9-MM4
SS-FMA-2FH9-2MP6	SS-FMA-MF9-MM6
SS-FMA-2FH9-2MP9	SS-FMA-MF9-MM9
SS-FMA-2FH9-2MP12	SS-FMA-MF9-MM12
SS-FMA-2FH9-2MP16	SS-FMA-MF9-MM16
SS-FMA-2FH12-2MP4	SS-FMA-MF12-MM4
SS-FMA-2FH12-2MP6	SS-FMA-MF12-MM6
SS-FMA-2FH12-2MP9	SS-FMA-MF12-MM9
SS-FMA-2FH12-2MP12	SS-FMA-MF12-MM12
SS-FMA-2FH12-2MP16	SS-FMA-MF12-MM16
SS-FMA-2FH16-2MP9	SS-FMA-MF16-MM9
SS-FMA-2FH16-2MP12	SS-FMA-MF16-MM12
SS-FMA-2FH16-2MP16	SS-FMA-MF16-MM16
SS-FMA-2FH4-2CT4	SS-FMA-MF4-MCT4
SS-FMA-2FH4-2CT6	SS-FMA-MF4-MCT6
SS-FMA-2FH4-2CT9	SS-FMA-MF4-MCT9
SS-FMA-2FH6-2CT4	SS-FMA-MF6-MCT4
SS-FMA-2FH6-2CT6	SS-FMA-MF6-MCT6
SS-FMA-2FH6-2CT9	SS-FMA-MF6-MCT9
SS-FMA-2FH9-2CT4	SS-FMA-MF9-MCT4
SS-FMA-2FH9-2CT6	SS-FMA-MF9-MCT6
SS-FMA-2FH9-2CT9	SS-FMA-MF9-MCT9
SS-FMA-2FH12-2CT4	SS-FMA-MF12-MCT4
SS-FMA-2FH12-2CT6	SS-FMA-MF12-MCT6
SS-FMA-2FH12-2CT9	SS-FMA-MF12-MCT9
SS-FMA-2FH16-2CT4	SS-FMA-MF16-MCT4
SS-FMA-2FH16-2CT6	SS-FMA-MF16-MCT6
SS-FMA-2FH16-2CT9	SS-FMA-MF16-MCT9
SS-FMA-2FH4-DMP2	SS-FMA-MF4-DFM2
SS-FMA-2FH4-DMP4	SS-FMA-MF4-DFM4
SS-FMA-2FH4-DMP6	SS-FMA-MF4-DFM6
SS-FMA-2FH4-DMP8	SS-FMA-MF4-DFM8
SS-FMA-2FH6-DMP2	SS-FMA-MF6-DFM2
SS-FMA-2FH6-DMP4	SS-FMA-MF6-DFM4
SS-FMA-2FH6-DMP6	SS-FMA-MF6-DFM6
SS-FMA-2FH6-DMP8	SS-FMA-MF6-DFM8
SS-FMA-2FH9-DMP2	SS-FMA-MF9-DFM2

AMH Series Adapter Fittings

Formerly Used P/N	New P/N Adopted
SS-FMA-2FH9-DMP4	SS-FMA-MF9-DFM4
SS-FMA-2FH9-DMP6	SS-FMA-MF9-DFM6
SS-FMA-2FH9-DMP8	SS-FMA-MF9-DFM8
SS-FMA-2FH12-DMP2	SS-FMA-MF12-DFM2
SS-FMA-2FH12-DMP4	SS-FMA-MF12-DFM4
SS-FMA-2FH12-DMP6	SS-FMA-MF12-DFM6
SS-FMA-2FH12-DMP8	SS-FMA-MF12-DFM8
SS-FMA-2FH16-DMP2	SS-FMA-MF16-DFM2
SS-FMA-2FH16-DMP4	SS-FMA-MF16-DFM4
SS-FMA-2FH16-DMP6	SS-FMA-MF16-DFM6
SS-FMA-2FH16-DMP8	SS-FMA-MF16-DFM8
SS-FMA-2FH4-NS2	SS-FMA-MF4-NS2
SS-FMA-2FH4-NS4	SS-FMA-MF4-NS4
SS-FMA-2FH4-NS6	SS-FMA-MF4-NS6
SS-FMA-2FH4-NS8	SS-FMA-MF4-NS8
SS-FMA-2FH4-NS12	SS-FMA-MF4-NS12
SS-FMA-2FH6-NS2	SS-FMA-MF6-NS2
SS-FMA-2FH6-NS4	SS-FMA-MF6-NS4
SS-FMA-2FH6-NS6	SS-FMA-MF6-NS6
SS-FMA-2FH6-NS8	SS-FMA-MF6-NS8
SS-FMA-2FH6-NS12	SS-FMA-MF6-NS12
SS-FMA-2FH6-NS16	SS-FMA-MF6-NS16
SS-FMA-2FH9-NS2	SS-FMA-MF9-NS2
SS-FMA-2FH9-NS4	SS-FMA-MF9-NS4
SS-FMA-2FH9-NS6	SS-FMA-MF9-NS6
SS-FMA-2FH9-NS8	SS-FMA-MF9-NS8
SS-FMA-2FH9-NS12	SS-FMA-MF9-NS12
SS-FMA-2FH9-NS16	SS-FMA-MF9-NS16
SS-FMA-2FH12-NS2	SS-FMA-MF12-NS2
SS-FMA-2FH12-NS4	SS-FMA-MF12-NS4
SS-FMA-2FH12-NS6	SS-FMA-MF12-NS6
SS-FMA-2FH12-NS8	SS-FMA-MF12-NS8
SS-FMA-2FH12-NS12	SS-FMA-MF12-NS12
SS-FMA-2FH12-NS16	SS-FMA-MF12-NS16
SS-FMA-2FH16-NS2	SS-FMA-MF16-NS2
SS-FMA-2FH16-NS4	SS-FMA-MF16-NS4
SS-FMA-2FH16-NS6	SS-FMA-MF16-NS6
SS-FMA-2FH16-NS8	SS-FMA-MF16-NS8
SS-FMA-2FH16-NS12	SS-FMA-MF16-NS12
SS-FMA-2FH16-NS16	SS-FMA-MF16-NS16
SS-FMA-2FH4-HM9	SS-FMA-MF4-TM9
SS-FMA-2FH4-HM12	SS-FMA-MF4-TM12
SS-FMA-2FH4-HM14	SS-FMA-MF4-TM14
SS-FMA-2FH6-HM9	SS-FMA-MF6-TM9
SS-FMA-2FH6-HM12	SS-FMA-MF6-TM12
SS-FMA-2FH6-HM14	SS-FMA-MF6-TM14
SS-FMA-2FH6-HM16	SS-FMA-MF6-TM16
SS-FMA-2FH9-HM9	SS-FMA-MF9-TM9
SS-FMA-2FH9-HM12	SS-FMA-MF9-TM12
SS-FMA-2FH9-HM14	SS-FMA-MF9-TM14
SS-FMA-2FH9-HM16	SS-FMA-MF9-TM16
SS-FMA-2FH9-HM21	SS-FMA-MF9-TM21
SS-FMA-2FH12-HM14	SS-FMA-MF12-TM14
SS-FMA-2FH12-HM16	SS-FMA-MF12-TM16
SS-FMA-2FH12-HM21	SS-FMA-MF12-TM21
SS-FMA-2FH16-HM21	SS-FMA-MF16-TM21
SS-FMA-DHL2-6MP4	SS-FMA-DFF2-HM4
SS-FMA-DHL2-6MP6	SS-FMA-DFF2-HM6
SS-FMA-DHL2-6MP9	SS-FMA-DFF2-HM9
SS-FMA-DHL4-6MP4	SS-FMA-DFF4-HM4
SS-FMA-DHL4-6MP6	SS-FMA-DFF4-HM6
SS-FMA-DHL4-6MP9	SS-FMA-DFF4-HM9
SS-FMA-DHL6-6MP4	SS-FMA-DFF6-HM4
SS-FMA-DHL6-6MP6	SS-FMA-DFF6-HM6
SS-FMA-DHL6-6MP9	SS-FMA-DFF6-HM9
SS-FMA-DHL8-6MP4	SS-FMA-DFF8-HM4
SS-FMA-DHL8-6MP6	SS-FMA-DFF8-HM6
SS-FMA-DHL8-6MP9	SS-FMA-DFF8-HM9
SS-FMA-DHL2-2MP4	SS-FMA-DFF2-MM4
SS-FMA-DHL2-2MP6	SS-FMA-DFF2-MM6
SS-FMA-DHL2-2MP9	SS-FMA-DFF2-MM9
SS-FMA-DHL2-2MP12	SS-FMA-DFF2-MM12
SS-FMA-DHL2-2MP16	SS-FMA-DFF2-MM16
SS-FMA-DHL4-2MP4	SS-FMA-DFF4-MM4
SS-FMA-DHL4-2MP6	SS-FMA-DFF4-MM6
SS-FMA-DHL4-2MP9	SS-FMA-DFF4-MM9
SS-FMA-DHL4-2MP12	SS-FMA-DFF4-MM12
SS-FMA-DHL4-2MP16	SS-FMA-DFF4-MM16

AMH Series Adapter Fittings

Formerly Used P/N	New P/N Adopted
SS-FMA-DHL6-2MP4	SS-FMA-DFF6-MM4
SS-FMA-DHL6-2MP6	SS-FMA-DFF6-MM6
SS-FMA-DHL6-2MP9	SS-FMA-DFF6-MM9
SS-FMA-DHL6-2MP12	SS-FMA-DFF6-MM12
SS-FMA-DHL6-2MP16	SS-FMA-DFF6-MM16
SS-FMA-DHL8-2MP4	SS-FMA-DFF8-MM4
SS-FMA-DHL8-2MP6	SS-FMA-DFF8-MM6
SS-FMA-DHL8-2MP9	SS-FMA-DFF8-MM9
SS-FMA-DHL8-2MP12	SS-FMA-DFF8-MM12
SS-FMA-DHL8-2MP16	SS-FMA-DFF8-MM16
SS-FMA-DHL2-DMP2	SS-FMA-DFF2-DFM2
SS-FMA-DHL2-DMP4	SS-FMA-DFF2-DFM4
SS-FMA-DHL2-DMP6	SS-FMA-DFF2-DFM6
SS-FMA-DHL2-DMP8	SS-FMA-DFF2-DFM8
SS-FMA-DHL4-DMP2	SS-FMA-DFF4-DFM2
SS-FMA-DHL4-DMP4	SS-FMA-DFF4-DFM4
SS-FMA-DHL4-DMP6	SS-FMA-DFF4-DFM6
SS-FMA-DHL4-DMP8	SS-FMA-DFF4-DFM8
SS-FMA-DHL6-DMP2	SS-FMA-DFF6-DFM2
SS-FMA-DHL6-DMP4	SS-FMA-DFF6-DFM4
SS-FMA-DHL6-DMP6	SS-FMA-DFF6-DFM6
SS-FMA-DHL6-DMP8	SS-FMA-DFF6-DFM8
SS-FMA-DHL8-DMP2	SS-FMA-DFF8-DFM2
SS-FMA-DHL8-DMP4	SS-FMA-DFF8-DFM4
SS-FMA-DHL8-DMP6	SS-FMA-DFF8-DFM6
SS-FMA-DHL8-DMP8	SS-FMA-DFF8-DFM8
SS-FMA-NS2-6MP4	SS-FMA-FNS2-HM4
SS-FMA-NS2-6MP6	SS-FMA-FNS2-HM6
SS-FMA-NS2-6MP9	SS-FMA-FNS2-HM9
SS-FMA-NS4-6MP4	SS-FMA-FNS4-HM4
SS-FMA-NS4-6MP6	SS-FMA-FNS4-HM6
SS-FMA-NS4-6MP9	SS-FMA-FNS4-HM9
SS-FMA-NS6-6MP4	SS-FMA-FNS6-HM4
SS-FMA-NS6-6MP6	SS-FMA-FNS6-HM6
SS-FMA-NS6-6MP9	SS-FMA-FNS6-HM9
SS-FMA-NS8-6MP4	SS-FMA-FNS8-HM4
SS-FMA-NS8-6MP6	SS-FMA-FNS8-HM6
SS-FMA-NS8-6MP9	SS-FMA-FNS8-HM9
SS-FMA-NS12-6MP4	SS-FMA-FNS12-HM4
SS-FMA-NS12-6MP6	SS-FMA-FNS12-HM6
SS-FMA-NS12-6MP9	SS-FMA-FNS12-HM9
SS-FMA-NS16-6MP4	SS-FMA-FNS16-HM4
SS-FMA-NS16-6MP6	SS-FMA-FNS16-HM6
SS-FMA-NS16-6MP9	SS-FMA-FNS16-HM9
SS-FMA-NS2-6CT4	SS-FMA-FNS2-HCT4
SS-FMA-NS2-6CT6	SS-FMA-FNS2-HCT6
SS-FMA-NS4-6CT4	SS-FMA-FNS4-HCT4
SS-FMA-NS4-6CT6	SS-FMA-FNS4-HCT6
SS-FMA-NS4-6CT9	SS-FMA-FNS4-HCT9
SS-FMA-NS6-6CT4	SS-FMA-FNS6-HCT4
SS-FMA-NS6-6CT6	SS-FMA-FNS6-HCT6
SS-FMA-NS6-6CT9	SS-FMA-FNS6-HCT9
SS-FMA-NS8-6CT4	SS-FMA-FNS8-HCT4
SS-FMA-NS8-6CT6	SS-FMA-FNS8-HCT6
SS-FMA-NS8-6CT9	SS-FMA-FNS8-HCT9
SS-FMA-NS12-6CT4	SS-FMA-FNS12-HCT4
SS-FMA-NS12-6CT6	SS-FMA-FNS12-HCT6
SS-FMA-NS12-6CT9	SS-FMA-FNS12-HCT9
SS-FMA-NS16-6CT4	SS-FMA-FNS16-HCT4
SS-FMA-NS16-6CT6	SS-FMA-FNS16-HCT6
SS-FMA-NS16-6CT9	SS-FMA-FNS16-HCT9
SS-FMA-NS2-2MP4	SS-FMA-FNS2-MM4
SS-FMA-NS2-2MP6	SS-FMA-FNS2-MM6
SS-FMA-NS2-2MP9	SS-FMA-FNS2-MM9
SS-FMA-NS2-2MP12	SS-FMA-FNS2-MM12
SS-FMA-NS2-2MP16	SS-FMA-FNS2-MM16
SS-FMA-NS4-2MP4	SS-FMA-FNS4-MM4
SS-FMA-NS4-2MP6	SS-FMA-FNS4-MM6
SS-FMA-NS4-2MP9	SS-FMA-FNS4-MM9
SS-FMA-NS4-2MP12	SS-FMA-FNS4-MM12
SS-FMA-NS4-2MP16	SS-FMA-FNS4-MM16
SS-FMA-NS6-2MP4	SS-FMA-FNS6-MM4
SS-FMA-NS6-2MP6	SS-FMA-FNS6-MM6
SS-FMA-NS6-2MP9	SS-FMA-FNS6-MM9
SS-FMA-NS6-2MP12	SS-FMA-FNS6-MM12
SS-FMA-NS6-2MP16	SS-FMA-FNS6-MM16
SS-FMA-NS8-2MP4	SS-FMA-FNS8-MM4
SS-FMA-NS8-2MP6	SS-FMA-FNS8-MM6

AMH Series Adapter Fittings

Formerly Used P/N	New P/N Adopted
SS-FMA-NS8-2MP9	SS-FMA-FNS8-MM9
SS-FMA-NS8-2MP12	SS-FMA-FNS8-MM12
SS-FMA-NS8-2MP16	SS-FMA-FNS8-MM16
SS-FMA-NS12-2MP4	SS-FMA-FNS12-MM4
SS-FMA-NS12-2MP6	SS-FMA-FNS12-MM6
SS-FMA-NS12-2MP9	SS-FMA-FNS12-MM9
SS-FMA-NS12-2MP12	SS-FMA-FNS12-MM12
SS-FMA-NS12-2MP16	SS-FMA-FNS12-MM16
SS-FMA-NS16-2MP4	SS-FMA-FNS16-MM4
SS-FMA-NS16-2MP6	SS-FMA-FNS16-MM6
SS-FMA-NS16-2MP9	SS-FMA-FNS16-MM9
SS-FMA-NS16-2MP12	SS-FMA-FNS16-MM12
SS-FMA-NS16-2MP16	SS-FMA-FNS16-MM16
SS-FMA-NS2-2CT4	SS-FMA-FNS2-MCT4
SS-FMA-NS2-2CT6	SS-FMA-FNS2-MCT6
SS-FMA-NS2-2CT9	SS-FMA-FNS2-MCT9
SS-FMA-NS2-2CT12	SS-FMA-FNS2-MCT12
SS-FMA-NS2-2CT16	SS-FMA-FNS2-MCT16
SS-FMA-NS4-2CT4	SS-FMA-FNS4-MCT4
SS-FMA-NS4-2CT6	SS-FMA-FNS4-MCT6
SS-FMA-NS4-2CT9	SS-FMA-FNS4-MCT9
SS-FMA-NS4-2CT12	SS-FMA-FNS4-MCT12
SS-FMA-NS4-2CT16	SS-FMA-FNS4-MCT16
SS-FMA-NS6-2CT6	SS-FMA-FNS6-MCT6
SS-FMA-NS6-2CT9	SS-FMA-FNS6-MCT9
SS-FMA-NS6-2CT12	SS-FMA-FNS6-MCT12
SS-FMA-NS6-2CT16	SS-FMA-FNS6-MCT16
SS-FMA-NS8-2CT9	SS-FMA-FNS8-MCT9
SS-FMA-NS8-2CT12	SS-FMA-FNS8-MCT12
SS-FMA-NS8-2CT16	SS-FMA-FNS8-MCT16
SS-FMA-NS12-2CT9	SS-FMA-FNS12-MCT9
SS-FMA-NS12-2CT12	SS-FMA-FNS12-MCT12
SS-FMA-NS12-2CT16	SS-FMA-FNS12-MCT16
SS-FMA-NS16-2CT12	SS-FMA-FNS16-MCT12
SS-FMA-NS16-2CT16	SS-FMA-FNS16-MCT16
SS-FMA-NS2-DMP2	SS-FMA-FNS2-DFM2
SS-FMA-NS2-DMP4	SS-FMA-FNS2-DFM4
SS-FMA-NS2-DMP6	SS-FMA-FNS2-DFM6
SS-FMA-NS2-DMP8	SS-FMA-FNS2-DFM8
SS-FMA-NS4-DMP2	SS-FMA-FNS4-DFM2
SS-FMA-NS4-DMP4	SS-FMA-FNS4-DFM4
SS-FMA-NS4-DMP6	SS-FMA-FNS4-DFM6
SS-FMA-NS4-DMP8	SS-FMA-FNS4-DFM8
SS-FMA-NS6-DMP2	SS-FMA-FNS6-DFM2
SS-FMA-NS6-DMP4	SS-FMA-FNS6-DFM4
SS-FMA-NS6-DMP6	SS-FMA-FNS6-DFM6
SS-FMA-NS6-DMP8	SS-FMA-FNS6-DFM8
SS-FMA-NS8-DMP2	SS-FMA-FNS8-DFM2
SS-FMA-NS8-DMP4	SS-FMA-FNS8-DFM4
SS-FMA-NS8-DMP6	SS-FMA-FNS8-DFM6
SS-FMA-NS8-DMP8	SS-FMA-FNS8-DFM8
SS-FMA-NS12-DMP2	SS-FMA-FNS12-DFM2
SS-FMA-NS12-DMP4	SS-FMA-FNS12-DFM4
SS-FMA-NS12-DMP6	SS-FMA-FNS12-DFM6
SS-FMA-NS12-DMP8	SS-FMA-FNS12-DFM8
SS-FMA-NS16-DMP2	SS-FMA-FNS16-DFM2
SS-FMA-NS16-DMP4	SS-FMA-FNS16-DFM4
SS-FMA-NS16-DMP6	SS-FMA-FNS16-DFM6
SS-FMA-NS16-DMP8	SS-FMA-FNS16-DFM8
SS-MMA-6MP4	SS-MMA-HM4
SS-MMA-6MP6	SS-MMA-HM6
SS-MMA-6MP9-6MP4	SS-MMA-HM9-HM4
SS-MMA-6MP9-6MP6	SS-MMA-HM9-HM6
SS-MMA-6MP9	SS-MMA-HM9
SS-MMA-6MP6-6MP4	SS-MMA-HM6-HM4
SS-MMA-6MP4-2MP4	SS-MMA-HM4-MM4
SS-MMA-6MP4-2MP9	SS-MMA-HM4-MM9
SS-MMA-6MP4-2MP12	SS-MMA-HM4-MM12
SS-MMA-6MP4-2MP16	SS-MMA-HM4-MM16
SS-MMA-6MP6-2MP4	SS-MMA-HM6-MM4
SS-MMA-6MP6-2MP6	SS-MMA-HM6-MM6
SS-MMA-6MP6-2MP9	SS-MMA-HM6-MM9
SS-MMA-6MP6-2MP12	SS-MMA-HM6-MM12
SS-MMA-6MP6-2MP16	SS-MMA-HM6-MM16
SS-MMA-6MP9-2MP4	SS-MMA-HM9-MM4
SS-MMA-6MP9-2MP6	SS-MMA-HM9-MM6
SS-MMA-6MP9-2MP9	SS-MMA-HM9-MM9
SS-MMA-6MP9-2MP12	SS-MMA-HM9-MM12

AMH Series Adapter Fittings

Formerly Used P/N	New P/N Adopted
SS-MMA-6MP9-2MP16	SS-MMA-HM9-MM16
SS-MMA-6MP4-2MP6	SS-MMA-HM4-MM6
SS-MMA-6MP4-DMP2	SS-MMA-HM4-DFM2
SS-MMA-6MP4-DMP4	SS-MMA-HM4-DFM4
SS-MMA-6MP4-DMP8	SS-MMA-HM4-DFM8
SS-MMA-6MP4-DMP6	SS-MMA-HM4-DFM6
SS-MMA-6MP6-DMP2	SS-MMA-HM6-DFM2
SS-MMA-6MP6-DMP4	SS-MMA-HM6-DFM4
SS-MMA-6MP6-DMP8	SS-MMA-HM6-DFM8
SS-MMA-6MP6-DMP6	SS-MMA-HM6-DFM6
SS-MMA-6MP9-DMP2	SS-MMA-HM9-DFM2
SS-MMA-6MP9-DMP4	SS-MMA-HM9-DFM4
SS-MMA-6MP9-DMP8	SS-MMA-HM9-DFM8
SS-MMA-6MP9-DMP6	SS-MMA-HM9-DFM6
SS-MMA-6MP4-NS2	SS-MMA-HM4-NS2
SS-MMA-6MP4-NS4	SS-MMA-HM4-NS4
SS-MMA-6MP4-NS6	SS-MMA-HM4-NS6
SS-MMA-6MP4-NS8	SS-MMA-HM4-NS8
SS-MMA-6MP4-NS12	SS-MMA-HM4-NS12
SS-MMA-6MP4-NS16	SS-MMA-HM4-NS16
SS-MMA-6MP6-NS2	SS-MMA-HM6-NS2
SS-MMA-6MP6-NS4	SS-MMA-HM6-NS4
SS-MMA-6MP6-NS6	SS-MMA-HM6-NS6
SS-MMA-6MP6-NS8	SS-MMA-HM6-NS8
SS-MMA-6MP6-NS12	SS-MMA-HM6-NS12
SS-MMA-6MP6-NS16	SS-MMA-HM6-NS16
SS-MMA-6MP9-NS2	SS-MMA-HM9-NS2
SS-MMA-6MP9-NS4	SS-MMA-HM9-NS4
SS-MMA-6MP9-NS6	SS-MMA-HM9-NS6
SS-MMA-6MP9-NS8	SS-MMA-HM9-NS8
SS-MMA-6MP9-NS12	SS-MMA-HM9-NS12
SS-MMA-6MP9-NS16	SS-MMA-HM9-NS16
SS-MMA-6MP4-AN4	SS-MMA-HM4-JM4
SS-MMA-6MP4-AN6	SS-MMA-HM4-JM6
SS-MMA-6MP4-AN8	SS-MMA-HM4-JM8
SS-MMA-6MP4-AN10	SS-MMA-HM4-JM10
SS-MMA-6MP4-AN12	SS-MMA-HM4-JM12
SS-MMA-6MP4-AN16	SS-MMA-HM4-JM16
SS-MMA-6MP6-AN4	SS-MMA-HM6-JM4
SS-MMA-6MP6-AN6	SS-MMA-HM6-JM6
SS-MMA-6MP6-AN8	SS-MMA-HM6-JM8
SS-MMA-6MP6-AN10	SS-MMA-HM6-JM10
SS-MMA-6MP6-AN12	SS-MMA-HM6-JM12
SS-MMA-6MP6-AN16	SS-MMA-HM6-JM16
SS-MMA-6MP9-AN4	SS-MMA-HM9-JM4
SS-MMA-6MP9-AN6	SS-MMA-HM9-JM6
SS-MMA-6MP9-AN8	SS-MMA-HM9-JM8
SS-MMA-6MP9-AN10	SS-MMA-HM9-JM10
SS-MMA-6MP9-AN12	SS-MMA-HM9-JM12
SS-MMA-6MP9-AN16	SS-MMA-HM9-JM16
SS-MMA-6MP4-HM9	SS-MMA-HM4-TM9
SS-MMA-6MP4-HM12	SS-MMA-HM4-TM12
SS-MMA-6MP4-HM14	SS-MMA-HM4-TM14
SS-MMA-6MP4-HM16	SS-MMA-HM4-TM16
SS-MMA-6MP4-HM21	SS-MMA-HM4-TM21
SS-MMA-6MP6-HM9	SS-MMA-HM6-TM9
SS-MMA-6MP6-HM12	SS-MMA-HM6-TM12
SS-MMA-6MP6-HM14	SS-MMA-HM6-TM14
SS-MMA-6MP6-HM16	SS-MMA-HM6-TM16
SS-MMA-6MP6-HM21	SS-MMA-HM6-TM21
SS-MMA-6MP9-HM9	SS-MMA-HM9-TM9
SS-MMA-6MP9-HM12	SS-MMA-HM9-TM12
SS-MMA-6MP9-HM14	SS-MMA-HM9-TM14
SS-MMA-6MP9-HM16	SS-MMA-HM9-TM16
SS-MMA-6MP9-HM21	SS-MMA-HM9-TM21
SS-MMA-2MP4	SS-MMA-MM4
SS-MMA-2MP6-2MP4	SS-MMA-MM6-MM4
SS-MMA-2MP6	SS-MMA-MM6
SS-MMA-2MP9-2MP4	SS-MMA-MM9-MM4
SS-MMA-2MP9-2MP6	SS-MMA-MM9-MM6
SS-MMA-2MP9	SS-MMA-MM9
SS-MMA-2MP12-2MP4	SS-MMA-MM12-MM4
SS-MMA-2MP12-2MP6	SS-MMA-MM12-MM6
SS-MMA-2MP12-2MP9	SS-MMA-MM12-MM9
SS-MMA-2MP12	SS-MMA-MM12
SS-MMA-2MP16-2MP4	SS-MMA-MM16-MM4
SS-MMA-2MP16-2MP6	SS-MMA-MM16-MM6
SS-MMA-2MP16-2MP9	SS-MMA-MM16-MM9

AMH Series Adapter Fittings

Formerly Used P/N	New P/N Adopted
SS-MMA-2MP16-2MP12	SS-MMA-MM16-MM12
SS-MMA-2MP16	SS-MMA-MM16
SS-MMA-2MP4-DMP2	SS-MMA-MM4-DFM2
SS-MMA-2MP4-DMP4	SS-MMA-MM4-DFM4
SS-MMA-2MP4-DMP6	SS-MMA-MM4-DFM6
SS-MMA-2MP4-DMP8	SS-MMA-MM4-DFM8
SS-MMA-2MP6-DMP2	SS-MMA-MM6-DFM2
SS-MMA-2MP6-DMP4	SS-MMA-MM6-DFM4
SS-MMA-2MP6-DMP6	SS-MMA-MM6-DFM6
SS-MMA-2MP6-DMP8	SS-MMA-MM6-DFM8
SS-MMA-2MP9-DMP2	SS-MMA-MM9-DFM2
SS-MMA-2MP9-DMP4	SS-MMA-MM9-DFM4
SS-MMA-2MP9-DMP6	SS-MMA-MM9-DFM6
SS-MMA-2MP9-DMP8	SS-MMA-MM9-DFM8
SS-MMA-2MP12-DMP2	SS-MMA-MM12-DFM2
SS-MMA-2MP12-DMP4	SS-MMA-MM12-DFM4
SS-MMA-2MP12-DMP6	SS-MMA-MM12-DFM6
SS-MMA-2MP12-DMP8	SS-MMA-MM12-DFM8
SS-MMA-2MP16-DMP2	SS-MMA-MM16-DFM2
SS-MMA-2MP16-DMP4	SS-MMA-MM16-DFM4
SS-MMA-2MP16-DMP6	SS-MMA-MM16-DFM6
SS-MMA-2MP16-DMP8	SS-MMA-MM16-DFM8
SS-MMA-2MP4-NS2	SS-MMA-MM4-NS2
SS-MMA-2MP4-NS4	SS-MMA-MM4-NS4
SS-MMA-2MP4-NS6	SS-MMA-MM4-NS6
SS-MMA-2MP4-NS8	SS-MMA-MM4-NS8
SS-MMA-2MP4-NS12	SS-MMA-MM4-NS12
SS-MMA-2MP4-NS16	SS-MMA-MM4-NS16
SS-MMA-2MP6-NS2	SS-MMA-MM6-NS2
SS-MMA-2MP6-NS4	SS-MMA-MM6-NS4
SS-MMA-2MP6-NS6	SS-MMA-MM6-NS6
SS-MMA-2MP6-NS8	SS-MMA-MM6-NS8
SS-MMA-2MP6-NS12	SS-MMA-MM6-NS12
SS-MMA-2MP6-NS16	SS-MMA-MM6-NS16
SS-MMA-2MP9-NS2	SS-MMA-MM9-NS2
SS-MMA-2MP9-NS4	SS-MMA-MM9-NS4
SS-MMA-2MP9-NS6	SS-MMA-MM9-NS6
SS-MMA-2MP9-NS8	SS-MMA-MM9-NS8
SS-MMA-2MP9-NS12	SS-MMA-MM9-NS12
SS-MMA-2MP9-NS16	SS-MMA-MM9-NS16
SS-MMA-2MP12-NS2	SS-MMA-MM12-NS2
SS-MMA-2MP12-NS4	SS-MMA-MM12-NS4
SS-MMA-2MP12-NS6	SS-MMA-MM12-NS6
SS-MMA-2MP12-NS8	SS-MMA-MM12-NS8
SS-MMA-2MP12-NS12	SS-MMA-MM12-NS12
SS-MMA-2MP12-NS16	SS-MMA-MM12-NS16
SS-MMA-2MP16-NS2	SS-MMA-MM16-NS2
SS-MMA-2MP16-NS4	SS-MMA-MM16-NS4
SS-MMA-2MP16-NS6	SS-MMA-MM16-NS6
SS-MMA-2MP16-NS8	SS-MMA-MM16-NS8
SS-MMA-2MP16-NS12	SS-MMA-MM16-NS12
SS-MMA-2MP16-NS16	SS-MMA-MM16-NS16
SS-MMA-2MP4-AN4	SS-MMA-MM4-JM4
SS-MMA-2MP4-AN6	SS-MMA-MM4-JM6
SS-MMA-2MP4-AN8	SS-MMA-MM4-JM8
SS-MMA-2MP4-AN10	SS-MMA-MM4-JM10
SS-MMA-2MP4-AN12	SS-MMA-MM4-JM12
SS-MMA-2MP4-AN16	SS-MMA-MM4-JM16
SS-MMA-2MP6-AN4	SS-MMA-MM6-JM4
SS-MMA-2MP6-AN6	SS-MMA-MM6-JM6
SS-MMA-2MP6-AN8	SS-MMA-MM6-JM8
SS-MMA-2MP6-AN10	SS-MMA-MM6-JM10
SS-MMA-2MP6-AN12	SS-MMA-MM6-JM12
SS-MMA-2MP6-AN16	SS-MMA-MM6-JM16
SS-MMA-2MP9-AN4	SS-MMA-MM9-JM4
SS-MMA-2MP9-AN6	SS-MMA-MM9-JM6
SS-MMA-2MP9-AN8	SS-MMA-MM9-JM8
SS-MMA-2MP9-AN10	SS-MMA-MM9-JM10
SS-MMA-2MP9-AN12	SS-MMA-MM9-JM12
SS-MMA-2MP9-AN16	SS-MMA-MM9-JM16
SS-MMA-2MP12-AN4	SS-MMA-MM12-JM4
SS-MMA-2MP12-AN6	SS-MMA-MM12-JM6
SS-MMA-2MP12-AN8	SS-MMA-MM12-JM8
SS-MMA-2MP12-AN10	SS-MMA-MM12-JM10
SS-MMA-2MP12-AN12	SS-MMA-MM12-JM12
SS-MMA-2MP12-AN16	SS-MMA-MM12-JM16
SS-MMA-2MP16-AN4	SS-MMA-MM16-JM4
SS-MMA-2MP16-AN6	SS-MMA-MM16-JM6

AMH Series Adapter Fittings

Formerly Used P/N	New P/N Adopted
SS-MMA-2MP16-AN8	SS-MMA-MM16-JM8
SS-MMA-2MP16-AN10	SS-MMA-MM16-JM10
SS-MMA-2MP16-AN12	SS-MMA-MM16-JM12
SS-MMA-2MP16-AN16	SS-MMA-MM16-JM16
SS-MMA-2MP4-HM9	SS-MMA-MM4-TM9
SS-MMA-2MP4-HM12	SS-MMA-MM4-TM12
SS-MMA-2MP4-HM14	SS-MMA-MM4-TM14
SS-MMA-2MP4-HM16	SS-MMA-MM4-TM16
SS-MMA-2MP4-HM21	SS-MMA-MM4-TM21
SS-MMA-2MP6-HM9	SS-MMA-MM6-TM9
SS-MMA-2MP6-HM12	SS-MMA-MM6-TM12
SS-MMA-2MP6-HM14	SS-MMA-MM6-TM14
SS-MMA-2MP6-HM16	SS-MMA-MM6-TM16
SS-MMA-2MP6-HM21	SS-MMA-MM6-TM21
SS-MMA-2MP9-HM9	SS-MMA-MM9-TM9
SS-MMA-2MP9-HM12	SS-MMA-MM9-TM12
SS-MMA-2MP9-HM14	SS-MMA-MM9-TM14
SS-MMA-2MP9-HM16	SS-MMA-MM9-TM16
SS-MMA-2MP9-HM21	SS-MMA-MM9-TM21
SS-MMA-2MP12-HM9	SS-MMA-MM12-TM9
SS-MMA-2MP12-HM12	SS-MMA-MM12-TM12
SS-MMA-2MP12-HM14	SS-MMA-MM12-TM14
SS-MMA-2MP12-HM16	SS-MMA-MM12-TM16
SS-MMA-2MP12-HM21	SS-MMA-MM12-TM21
SS-MMA-2MP16-HM9	SS-MMA-MM16-TM9
SS-MMA-2MP16-HM12	SS-MMA-MM16-TM12
SS-MMA-2MP16-HM14	SS-MMA-MM16-TM14
SS-MMA-2MP16-HM16	SS-MMA-MM16-TM16
SS-MMA-2MP16-HM21	SS-MMA-MM16-TM21
SS-MMA-DMP2	SS-MMA-DFM2
SS-MMA-DMP4-DMP2	SS-MMA-DFM4-DFM2
SS-MMA-DMP4	SS-MMA-DFM4
SS-MMA-DMP6-DMP2	SS-MMA-DFM6-DFM2
SS-MMA-DMP6-DMP4	SS-MMA-DFM6-DFM4
SS-MMA-DMP6	SS-MMA-DFM6
SS-MMA-DMP8-DMP2	SS-MMA-DFM8-DFM2
SS-MMA-DMP8-DMP4	SS-MMA-DFM8-DFM4
SS-MMA-DMP8-DMP6	SS-MMA-DFM8-DFM6
SS-MMA-DMP8	SS-MMA-DFM8
SS-MMA-DMP2-NS2	SS-MMA-DFM2-NS2
SS-MMA-DMP2-NS4	SS-MMA-DFM2-NS4
SS-MMA-DMP2-NS6	SS-MMA-DFM2-NS6
SS-MMA-DMP2-NS8	SS-MMA-DFM2-NS8
SS-MMA-DMP2-NS12	SS-MMA-DFM2-NS12
SS-MMA-DMP2-NS16	SS-MMA-DFM2-NS16
SS-MMA-DMP4-NS2	SS-MMA-DFM4-NS2
SS-MMA-DMP4-NS4	SS-MMA-DFM4-NS4
SS-MMA-DMP4-NS6	SS-MMA-DFM4-NS6
SS-MMA-DMP4-NS8	SS-MMA-DFM4-NS8
SS-MMA-DMP4-NS12	SS-MMA-DFM4-NS12
SS-MMA-DMP4-NS16	SS-MMA-DFM4-NS16
SS-MMA-DMP6-NS2	SS-MMA-DFM6-NS2
SS-MMA-DMP6-NS4	SS-MMA-DFM6-NS4
SS-MMA-DMP6-NS6	SS-MMA-DFM6-NS6
SS-MMA-DMP6-NS8	SS-MMA-DFM6-NS8
SS-MMA-DMP6-NS12	SS-MMA-DFM6-NS12
SS-MMA-DMP6-NS16	SS-MMA-DFM6-NS16
SS-MMA-DMP8-NS2	SS-MMA-DFM8-NS2
SS-MMA-DMP8-NS4	SS-MMA-DFM8-NS4
SS-MMA-DMP8-NS6	SS-MMA-DFM8-NS6
SS-MMA-DMP8-NS8	SS-MMA-DFM8-NS8
SS-MMA-DMP8-NS12	SS-MMA-DFM8-NS12
SS-MMA-DMP8-NS16	SS-MMA-DFM8-NS16
SS-MMA-DMP2-AN4	SS-MMA-DFM2-JM4
SS-MMA-DMP2-AN6	SS-MMA-DFM2-JM6
SS-MMA-DMP2-AN8	SS-MMA-DFM2-JM8
SS-MMA-DMP2-AN10	SS-MMA-DFM2-JM10
SS-MMA-DMP2-AN12	SS-MMA-DFM2-JM12
SS-MMA-DMP2-AN16	SS-MMA-DFM2-JM16
SS-MMA-DMP4-AN4	SS-MMA-DFM4-JM4
SS-MMA-DMP4-AN6	SS-MMA-DFM4-JM6
SS-MMA-DMP4-AN8	SS-MMA-DFM4-JM8
SS-MMA-DMP4-AN10	SS-MMA-DFM4-JM10
SS-MMA-DMP4-AN12	SS-MMA-DFM4-JM12
SS-MMA-DMP4-AN16	SS-MMA-DFM4-JM16
SS-MMA-DMP6-AN4	SS-MMA-DFM6-JM4
SS-MMA-DMP6-AN6	SS-MMA-DFM6-JM6
SS-MMA-DMP6-AN8	SS-MMA-DFM6-JM8

AMH Series Adapter Fittings

Formerly Used P/N	New P/N Adopted
SS-MMA-DMP6-AN10	SS-MMA-DFM6-JM10
SS-MMA-DMP6-AN12	SS-MMA-DFM6-JM12
SS-MMA-DMP6-AN16	SS-MMA-DFM6-JM16
SS-MMA-DMP8-AN4	SS-MMA-DFM8-JM4
SS-MMA-DMP8-AN6	SS-MMA-DFM8-JM6
SS-MMA-DMP8-AN8	SS-MMA-DFM8-JM8
SS-MMA-DMP8-AN10	SS-MMA-DFM8-JM10
SS-MMA-DMP8-AN12	SS-MMA-DFM8-JM12
SS-MMA-DMP8-AN16	SS-MMA-DFM8-JM16
SS-MMA-DMP2-HM9	SS-MMA-DFM2-TM9
SS-MMA-DMP2-HM12	SS-MMA-DFM2-TM12
SS-MMA-DMP2-HM14	SS-MMA-DFM2-TM14
SS-MMA-DMP2-HM16	SS-MMA-DFM2-TM16
SS-MMA-DMP2-HM21	SS-MMA-DFM2-TM21
SS-MMA-DMP4-HM9	SS-MMA-DFM4-TM9
SS-MMA-DMP4-HM12	SS-MMA-DFM4-TM12
SS-MMA-DMP4-HM14	SS-MMA-DFM4-TM14
SS-MMA-DMP4-HM16	SS-MMA-DFM4-TM16
SS-MMA-DMP4-HM21	SS-MMA-DFM4-TM21
SS-MMA-DMP6-HM9	SS-MMA-DFM6-TM9
SS-MMA-DMP6-HM12	SS-MMA-DFM6-TM12
SS-MMA-DMP6-HM14	SS-MMA-DFM6-TM14
SS-MMA-DMP6-HM16	SS-MMA-DFM6-TM16
SS-MMA-DMP6-HM21	SS-MMA-DFM6-TM21
SS-MMA-DMP8-HM9	SS-MMA-DFM8-TM9
SS-MMA-DMP8-HM12	SS-MMA-DFM8-TM12
SS-MMA-DMP8-HM14	SS-MMA-DFM8-TM14
SS-MMA-DMP8-HM16	SS-MMA-DFM8-TM16
SS-MMA-DMP8-HM21	SS-MMA-DFM8-TM21

Tubing

Formerly Used P/N	New P/N Adopted
SS-15T2-037-6M	SS-T15A-2-037-6M
SS-15T4-083-6M	SS-T15A-4-083-6M
SS-15T6-118-6M	SS-T15A-6-118-6M
SS-15T8-156-6M	SS-T15A-8-156-6M
SS-HT-6FH4-6M	SS-T60H-4-6M
SS-HT-6FH6-6M	SS-T60H-6-6M
SS-HT-6FH9-6M	SS-T60H-9-6M
SS-MT-2FH6-6M	SS-T20M-6-6M
SS-MT-2FH9-6M	SS-T20M-9-6M
SS-MT-2FH12-6M	SS-T20M-12-6M
SS-MT-2FH16-6M	SS-T20M-16-6M
S4-MT-2FH6-6M	S4-T20M-6-6M
S4-HT-6FH6-6M	S4-T60H-6-6M
SS-MT-2FH4-20	SS-T20M-4-20F
SS-MT-2FH6-20	SS-T20M-6-20F
SS-MT-2FH9-20	SS-T20M-9-20F
SS-MT-2FH12-20	SS-T20M-12-20F
SS-MT-2FH16-20	SS-T20M-16-20F
SS-HT-6FH4-20	SS-T60H-4-20F
SS-HT-6FH6-20	SS-T60H-6-20F
SS-HT-6FH9-20	SS-T60H-9-20F
SS-15T4-065-6M	SS-T15A-4-065-6M
SS-15T8-134-6M	SS-T15A-8-134-6M
SS-15T2-037-20	SS-T15A-2-037-20F
SS-15T4-083-20	SS-T15A-4-083-20F
SS-15T6-118-20	SS-T15A-6-118-20F
SS-15T8-156-20	SS-T15A-8-156-20F
SS-15T12-240-20	SS-T15A-12-240-20F
SS-15T12-240-6M	SS-T15A-12-240-6M
SS-CTN-2FH4-2.75	SS-T20M-4CT-2.75N
SS-CTN-2FH9-4	SS-T20M-9CT-4N
SS-CTN-2FH12-4	SS-T20M-12CT-4N
SS-CTN-2FH16-6	SS-T20M-16CT-6N
SS-CTN-2FH4-3	SS-T20M-4CT-3N
SS-CTN-2FH4-4	SS-T20M-4CT-4N
SS-CTN-2FH4-6	SS-T20M-4CT-6N
SS-CTN-2FH6-6	SS-T20M-6CT-6N
SS-CTN-2FH9-6	SS-T20M-9CT-6N
SS-CTN-2FH12-6	SS-T20M-12CT-6N
SS-CTN-2FH12-8	SS-T20M-12CT-8N
SS-CTN-2FH12-10	SS-T20M-12CT-10N
SS-CTN-2FH16-8	SS-T20M-16CT-8N
SS-CTN-2FH16-10	SS-T20M-16CT-10N
SS-CTN-2FH16-12	SS-T20M-16CT-12N
SS-CTN-2FH4-8	SS-T20M-4CT-8N
SS-CTN-2FH4-10	SS-T20M-4CT-10N
SS-CTN-2FH4-12	SS-T20M-4CT-12N
SS-CTN-2FH12-12	SS-T20M-12CT-12N
SS-CTN-2FH9-8	SS-T20M-9CT-8N
SS-CTN-2FH9-12	SS-T20M-9CT-12N
SS-CTN-2FH6-8	SS-T20M-6CT-8N
SS-CTN-2FH6-10	SS-T20M-6CT-10N
SS-CTN-2FH6-12	SS-T20M-6CT-12N

Quick Couplings

Formerly Used P/N	New P/N Adopted
HQSSS-2FH9-NP	HQSSS-MF9-NP
HQSSS-2FH9-CP	HQSSS-MF9-CP
HQC4P-AN4-CP	HQC4P-JM4-CP
HQC4P-AN6-CP	HQC4P-JM6-CP
HQC4P-AN8-CP	HQC4P-JM8-CP
HQC4P-2MP4-CP	HQC4P-MM4-CP
HQC4P-2MP6-CP	HQC4P-MM6-CP
HQC4P-2MP9-CP	HQC4P-MM9-CP
HQC4P-6MP4-CP	HQC4P-HM4-CP
HQC4P-6MP6-CP	HQC4P-HM6-CP
HQC4P-6MP9-CP	HQC4P-HM9-CP
HQC4P-HM9-CP	HQC4P-TM9-CP
HQC4P-HM12-CP	HQC4P-TM12-CP
HQC4P-HM16-CP	HQC4P-TM16-CP
HQC4P-AN4-NP	HQC4P-JM4-NP
HQC4P-AN6-NP	HQC4P-JM6-NP
HQC4P-AN8-NP	HQC4P-JM8-NP
HQC4P-2MP4-NP	HQC4P-MM4-NP
HQC4P-2MP6-NP	HQC4P-MM6-NP
HQC4P-2MP9-NP	HQC4P-MM9-NP
HQC4P-6MP4-NP	HQC4P-HM4-NP
HQC4P-6MP6-NP	HQC4P-HM6-NP
HQC4P-6MP9-NP	HQC4P-HM9-NP
HQC4P-HM9-NP	HQC4P-TM9-NP
HQC4P-HM12-NP	HQC4P-TM12-NP
HQC4P-HM16-NP	HQC4P-TM16-NP
HQC4P-AN4-NP1	HQC4P-JM4-NPO
HQC4P-AN6-NP1	HQC4P-JM6-NPO
HQC4P-AN8-NP1	HQC4P-JM8-NPO
HQC4P-2MP4-NP1	HQC4P-MM4-NPO
HQC4P-2MP6-NP1	HQC4P-MM6-NPO
HQC4P-2MP9-NP1	HQC4P-MM9-NPO
HQC4P-6MP4-NP1	HQC4P-HM4-NPO
HQC4P-6MP6-NP1	HQC4P-HM6-NPO
HQC4P-6MP9-NP1	HQC4P-HM9-NPO
HQC4P-HM9-NP1	HQC4P-TM9-NPO
HQC4P-HM12-NP1	HQC4P-TM12-NPO
HQC4P-HM16-NP1	HQC4P-TM16-NPO

Line Filters

Formerly Used P/N	New P/N Adopted
15FDSS-DHL2-0510	15FDSS-DFF2-0510
15FDSS-DHL2-1035	15FDSS-DFF2-1035
15FDSS-DHL2-3565	15FDSS-DFF2-3565
15FDSS-DHL4-0510	15FDSS-DFF4-0510
15FDSS-DHL4-1035	15FDSS-DFF4-1035
15FDSS-DHL4-3565	15FDSS-DFF4-3565
15FDSS-DHL6-0510	15FDSS-DFF6-0510
15FDSS-DHL6-1035	15FDSS-DFF6-1035
15FDSS-DHL6-3565	15FDSS-DFF6-3565
15FDSS-DHL8-0510	15FDSS-DFF8-0510
15FDSS-DHL8-1035	15FDSS-DFF8-1035
15FDSS-DHL8-3565	15FDSS-DFF8-3565
15FCSS-DHL4-5	15FCSS-DFF4-5
15FCSS-DHL4-35	15FCSS-DFF4-35
15FCSS-DHL4-65	15FCSS-DFF4-65
15FCSS-DHL6-5	15FCSS-DFF6-5
15FCSS-DHL6-35	15FCSS-DFF6-35
15FCSS-DHL6-65	15FCSS-DFF6-65
15FCSS-DHL8-5	15FCSS-DFF8-5
15FCSS-DHL8-35	15FCSS-DFF8-35
15FCSS-DHL8-65	15FCSS-DFF8-65
20FDSS-2FH9-0510	20FDSS-MF9-0510
20FDSS-2FH9-1035	20FDSS-MF9-1035
20FDSS-2FH9-3565	20FDSS-MF9-3565
20FCSS-2FH4-5	20FCSS-MF4-5
20FCSS-2FH4-35	20FCSS-MF4-35
20FCSS-2FH4-65	20FCSS-MF4-65
20FCSS-2FH6-5	20FCSS-MF6-5
20FCSS-2FH6-35	20FCSS-MF6-35
20FCSS-2FH6-65	20FCSS-MF6-65
20FCSS-2FH9-5	20FCSS-MF9-5
20FCSS-2FH9-35	20FCSS-MF9-35

Line Filters

Formerly Used P/N	New P/N Adopted
20FCSS-2FH9-65	20FCSS-MF9-65
20FCSS-2FH12-5	20FCSS-MF12-5
20FCSS-2FH12-35	20FCSS-MF12-35
20FCSS-2FH12-65	20FCSS-MF12-65
20FCSS-2FH16-5	20FCSS-MF16-5
20FCSS-2FH16-35	20FCSS-MF16-35
20FCSS-2FH16-65	20FCSS-MF16-65
60FDSS-6FH4-0510	60FDSS-HF4-0510
60FDSS-6FH4-1035	60FDSS-HF4-1035
60FDSS-6FH4-3565	60FDSS-HF4-3565
60FDSS-6FH6-0510	60FDSS-HF6-0510
60FDSS-6FH6-1035	60FDSS-HF6-1035
60FDSS-6FH6-3565	60FDSS-HF6-3565
60FDSS-6FH9-0510	60FDSS-HF9-0510
60FDSS-6FH9-1035	60FDSS-HF9-1035
60FDSS-6FH9-3565	60FDSS-HF9-3565
60FCSS-6FH4-5	60FCSS-HF4-5
60FCSS-6FH4-35	60FCSS-HF4-35
60FCSS-6FH4-65	60FCSS-HF4-65
60FCSS-6FH6-5	60FCSS-HF6-5
60FCSS-6FH6-35	60FCSS-HF6-35
60FCSS-6FH6-65	60FCSS-HF6-65
60FCSS-6FH9-5	60FCSS-HF9-5
60FCSS-6FH9-35	60FCSS-HF9-35
60FCSS-6FH9-65	60FCSS-HF9-65

Ball Valves and Pneumatic Ball Valves

Formerly Used P/N	New P/N Adopted
10BSS-DFF12-8-1-ATC	10BSS-DFF12-8-1-O
10BSS-DFF12-8-1-ATO	10BSS-DFF12-8-1-C
10BSS-MF12-8-1-ATO	10BSS-MF12-8-1-C
10BSS-MF12-8-1-ATC	10BSS-MF12-8-1-O
10BSS-MF12-8-1-AOC	10BSS-MF12-8-1-D
10BSS-FNS16-8-1-ATO	10BSS-FNS16-8-1-C
10BSS-FNS16-8-1-ATC	10BSS-FNS16-8-1-O
15BSS-DFF6-1-AOC	15BSS-DFF6-4-1-D
15BSS-DFF8-1-ATO	15BSS-DFF8-4-1-C
15BSS-FNS4-1-ATO	15BSS-FNS4-4-1-C
15BSS-FNS4-1-ATC	15BSS-FNS4-4-1-O
15BSS-FNS4-1-N-ATO	15BSS-FNS4-4B-1-C
15BSS-FNS8-6-1-N-AOC	15BSS-FNS8-6B-1-D
15BSS-MF12-8-1-AOC	15BSS-MF12-8-1-D
20BSS-DFF4-1-ATO	20BSS-DFF4-4-1-C
20BSS-MF6-1-ATO	20BSS-MF6-4-1-C
20BSS-MF6-2-AOC	20BSS-MF6-4-2-DX
20BSS-MF6-6-1-ATO	20BSS-MF6-6-1-C
20BSS-MF9-6-1-ATO	20BSS-MF9-6-1-C
20BSS-MF9-6-1-N-ATO	20BSS-MF9-6B-1-C
20BSS-MF12-6-1-ATO	20BSS-MF12-6-1-C
20BSS-MF12-6-1-ATC	20BSS-MF12-6-1-O

Needle Valves and Pneumatic Needle Valves

Formerly Used P/N	New P/N Adopted
10NSS-2FH9-1	10NSS-MF9-1
10NSS-2FH12-1	10NSS-MF12-1
10NSS-2FH16-1	10NSS-MF16-1
10NSS-2FH9-2	10NSS-MF9-2
10NSS-2FH12-2	10NSS-MF12-2
10NSS-2FH16-2	10NSS-MF16-2
10NSS-2FH9-3	10NSS-MF9-3
10NSS-2FH12-3	10NSS-MF12-3
10NSS-2FH16-3	10NSS-MF16-3
10NSS-2FH9-4	10NSS-MF9-4
10NSS-2FH12-4	10NSS-MF12-4
10NSS-2FH16-4	10NSS-MF16-4
10NSS-2FH9-5	10NSS-MF9-5
10NSS-2FH12-5	10NSS-MF12-5
10NSS-2FH16-5	10NSS-MF16-5
10NSS-2FH9-6	10NSS-MF9-6
10NSS-2FH12-6	10NSS-MF12-6
10NSS-2FH16-6	10NSS-MF16-6
10NSS-FNS12-1	10NSS-FNS12-1
10NSS-FNS16-1	10NSS-FNS16-1
10NSS-FRT12-1	10NSS-FRT12-1
10NSS-FRT16-1	10NSS-FRT16-1
10NSS-FNS12-2	10NSS-FNS12-2
10NSS-FNS16-2	10NSS-FNS16-2
10NSS-FRT12-2	10NSS-FRT12-2
10NSS-FRT16-2	10NSS-FRT16-2
10NSS-FNS12-4	10NSS-FNS12-4
10NSS-FNS16-4	10NSS-FNS16-4
10NSS-FRT12-4	10NSS-FRT12-4
10NSS-FRT16-4	10NSS-FRT16-4
10NSS-FNS12-5	10NSS-FNS12-5
10NSS-FNS16-5	10NSS-FNS16-5
10NSS-FRT12-5	10NSS-FRT12-5
10NSS-FRT16-5	10NSS-FRT16-5
10NSS-FNS12-6	10NSS-FNS12-6
10NSS-FNS16-6	10NSS-FNS16-6
10NSS-FRT12-6	10NSS-FRT12-6
10NSS-FRT16-6	10NSS-FRT16-6
15NSS-DHL2-1	15NSS-DFF2-1
15NSS-DHL4-1	15NSS-DFF4-1
15NSS-DHL6-1	15NSS-DFF6-1
15NSS-DHL8-1	15NSS-DFF8-1
15NSS-DHL2-2	15NSS-DFF2-2
15NSS-DHL4-2	15NSS-DFF4-2
15NSS-DHL6-2	15NSS-DFF6-2
15NSS-DHL8-2	15NSS-DFF8-2
15NSS-DHL2-3	15NSS-DFF2-3
15NSS-DHL4-3	15NSS-DFF4-3
15NSS-DHL6-3	15NSS-DFF6-3
15NSS-DHL8-3	15NSS-DFF8-3
15NSS-DHL2-4	15NSS-DFF2-4
15NSS-DHL4-4	15NSS-DFF4-4
15NSS-DHL6-4	15NSS-DFF6-4
15NSS-DHL8-4	15NSS-DFF8-4
15NSS-DHL2-5	15NSS-DFF2-5
15NSS-DHL4-5	15NSS-DFF4-5
15NSS-DHL6-5	15NSS-DFF6-5
15NSS-DHL8-5	15NSS-DFF8-5
15NSS-DHL2-6	15NSS-DFF2-6
15NSS-DHL4-6	15NSS-DFF4-6
15NSS-DHL6-6	15NSS-DFF6-6
15NSS-DHL8-6	15NSS-DFF8-6
15NSS-FNS2-1	15NSS-FNS2-1
15NSS-FRT2-1	15NSS-FRT2-1
15NSS-FNS4-1	15NSS-FNS4-1
15NSS-FRT4-1	15NSS-FRT4-1
15NSS-FNS6-1	15NSS-FNS6-1
15NSS-FRT6-1	15NSS-FRT6-1
15NSS-FNS8-1	15NSS-FNS8-1
15NSS-FRT8-1	15NSS-FRT8-1
15NSS-FNS2-2	15NSS-FNS2-2
15NSS-FRT2-2	15NSS-FRT2-2
15NSS-FNS4-2	15NSS-FNS4-2
15NSS-FRT4-2	15NSS-FRT4-2
15NSS-FNS6-2	15NSS-FNS6-2
15NSS-FRT6-2	15NSS-FRT6-2
15NSS-FNS8-2	15NSS-FNS8-2

Needle Valves and Pneumatic Needle Valves

Formerly Used P/N	New P/N Adopted
15NSS-FRT8-2	15NSS-FRT8-2
15NSS-FNS2-4	15NSS-FNS2-4
15NSS-FRT2-4	15NSS-FRT2-4
15NSS-FNS4-4	15NSS-FNS4-4
15NSS-FRT4-4	15NSS-FRT4-4
15NSS-FNS6-4	15NSS-FNS6-4
15NSS-FRT6-4	15NSS-FRT6-4
15NSS-FNS8-4	15NSS-FNS8-4
15NSS-FRT8-4	15NSS-FRT8-4
15NSS-FNS2-5	15NSS-FNS2-5
15NSS-FRT2-5	15NSS-FRT2-5
15NSS-FNS4-5	15NSS-FNS4-5
15NSS-FRT4-5	15NSS-FRT4-5
15NSS-FNS6-5	15NSS-FNS6-5
15NSS-FRT6-5	15NSS-FRT6-5
15NSS-FNS8-5	15NSS-FNS8-5
15NSS-FRT8-5	15NSS-FRT8-5
15NSS-FNS2-6	15NSS-FNS2-6
15NSS-FRT2-6	15NSS-FRT2-6
15NSS-FNS4-6	15NSS-FNS4-6
15NSS-FRT4-6	15NSS-FRT4-6
15NSS-FNS6-6	15NSS-FNS6-6
15NSS-FRT6-6	15NSS-FRT6-6
15NSS-FNS8-6	15NSS-FNS8-6
15NSS-FRT8-6	15NSS-FRT8-6
20NSS-2FH4-1	20NSS-MF4-1
20NSS-2FH6-1	20NSS-MF6-1
20NSS-2FH9-1	20NSS-MF9-1
20NSS-2FH12-1	20NSS-MF12-1
20NSS-2FH16-1	20NSS-MF16-1
20NSS-2FH4-2	20NSS-MF4-2
20NSS-2FH6-2	20NSS-MF6-2
20NSS-2FH9-2	20NSS-MF9-2
20NSS-2FH12-2	20NSS-MF12-2
20NSS-2FH16-2	20NSS-MF16-2
20NSS-2FH4-3	20NSS-MF4-3
20NSS-2FH6-3	20NSS-MF6-3
20NSS-2FH9-3	20NSS-MF9-3
20NSS-2FH12-3	20NSS-MF12-3
20NSS-2FH16-3	20NSS-MF16-3
20NSS-2FH4-4	20NSS-MF4-4
20NSS-2FH6-4	20NSS-MF6-4
20NSS-2FH9-4	20NSS-MF9-4
20NSS-2FH12-4	20NSS-MF12-4
20NSS-2FH16-4	20NSS-MF16-4
20NSS-2FH4-5	20NSS-MF4-5
20NSS-2FH6-5	20NSS-MF6-5
20NSS-2FH9-5	20NSS-MF9-5
20NSS-2FH12-5	20NSS-MF12-5
20NSS-2FH16-5	20NSS-MF16-5
20NSS-2FH4-6	20NSS-MF4-6
20NSS-2FH6-6	20NSS-MF6-6
20NSS-2FH9-6	20NSS-MF9-6
20NSS-2FH12-6	20NSS-MF12-6
20NSS-2FH16-6	20NSS-MF16-6
30NSS-6FH4-1	30NSS-HF4-1
30NSS-6FH6-1	30NSS-HF6-1
30NSS-6FH9-1	30NSS-HF9-1
30NSS-6FH4-2	30NSS-HF4-2
30NSS-6FH6-2	30NSS-HF6-2
30NSS-6FH9-2	30NSS-HF9-2
30NSS-6FH4-3	30NSS-HF4-3
30NSS-6FH6-3	30NSS-HF6-3
30NSS-6FH9-3	30NSS-HF9-3
30NSS-6FH4-4	30NSS-HF4-4
30NSS-6FH6-4	30NSS-HF6-4
30NSS-6FH9-4	30NSS-HF9-4
30NSS-6FH4-5	30NSS-HF4-5
30NSS-6FH6-5	30NSS-HF6-5
30NSS-6FH9-5	30NSS-HF9-5
30NSS-6FH4-6	30NSS-HF4-6
30NSS-6FH6-6	30NSS-HF6-6
30NSS-6FH9-6	30NSS-HF9-6
60NSS-6FH4-1	60NSS-HF4-1
60NSS-6FH6-1	60NSS-HF6-1
60NSS-6FH9-1	60NSS-HF9-1
60NSS-6FH4-2	60NSS-HF4-2

Needle Valves and Pneumatic Needle Valves

Formerly Used P/N	New P/N Adopted
60NSS-6FH6-2	60NSS-HF6-2
60NSS-6FH9-2	60NSS-HF9-2
60NSS-6FH4-3	60NSS-HF4-3
60NSS-6FH6-3	60NSS-HF6-3
60NSS-6FH9-3	60NSS-HF9-3
60NSS-6FH4-4	60NSS-HF4-4
60NSS-6FH6-4	60NSS-HF6-4
60NSS-6FH9-4	60NSS-HF9-4
60NSS-6FH4-5	60NSS-HF4-5
60NSS-6FH6-5	60NSS-HF6-5
60NSS-6FH9-5	60NSS-HF9-5
60NSS-6FH4-6	60NSS-HF4-6
60NSS-6FH6-6	60NSS-HF6-6
60NSS-6FH9-6	60NSS-HF9-6
10NSS-2FH9-X-ATO 10NSS-MF9-X-LC	10NSS-MF9-X-C
10NSS-2FH12-X-ATO 10NSS-MF12-X-LC	10NSS-MF12-X-C
10NSS-2FH16-X-ATO 10NSS-MF16-X-LC	10NSS-MF16-X-C
10NSS-FNS12-X-ATO 10NSS-FNS12-X-LC	10NSS-FNS12-X-C
10NSS-FRT12-X-ATO 10NSS-FRT12-X-LC	10NSS-FRT12-X-C
10NSS-FNS16-X-ATO 10NSS-FNS16-X-LC	10NSS-FNS16-X-C
10NSS-FRT16-X-ATO 10NSS-FRT16-X-LC	10NSS-FRT16-X-C
15NSS-DHL2-X-ATO 15NSS-DFF2-X-LC	15NSS-DFF2-X-C
15NSS-DHL4-X-ATO 15NSS-DFF4-X-LC	15NSS-DFF4-X-C
15NSS-DHL6-X-ATO 15NSS-DFF6-X-LC	15NSS-DFF6-X-C
15NSS-DHL8-X-ATO 15NSS-DFF8-X-LC	15NSS-DFF8-X-C
15NSS-FNS2-X-ATO 15NSS-FNS2-X-LC	15NSS-FNS2-X-C
15NSS-FRT2-X-ATO 15NSS-FRT2-X-LC	15NSS-FRT2-X-C
15NSS-FNS4-X-ATO 15NSS-FNS4-X-LC	15NSS-FNS4-X-C
15NSS-FRT4-X-ATO 15NSS-FRT4-X-LC	15NSS-FRT4-X-C
15NSS-FNS6-X-ATO 15NSS-FNS6-X-LC	15NSS-FNS6-X-C
15NSS-FRT6-X-ATO 15NSS-FRT6-X-LC	15NSS-FRT6-X-C
15NSS-FNS8-X-ATO 15NSS-FNS8-X-LC	15NSS-FNS8-X-C
15NSS-FRT8-X-ATO 15NSS-FRT8-X-LC	15NSS-FRT8-X-C
20NSS-2FH4-X-ATO 20NSS-MF4-X-LC	20NSS-MF4-X-C
20NSS-2FH6-X-ATO 20NSS-MF6-X-LC	20NSS-MF6-X-C
20NSS-2FH9-X-ATO 20NSS-MF9-X-LC	20NSS-MF9-X-C
20NSS-2FH12-X-ATO 20NSS-MF12-X-LC	20NSS-MF12-X-C
20NSS-2FH16-X-ATO 20NSS-MF16-X-LC	20NSS-MF16-X-C
30NSS-6FH4-X-ATO 30NSS-HF4-X-LC	30NSS-HF4-X-C
30NSS-6FH6-X-ATO 30NSS-HF6-X-LC	30NSS-HF6-X-C
30NSS-6FH9-X-ATO 30NSS-HF9-X-LC	30NSS-HF9-X-C
60NSS-6FH4-X-ATO 60NSS-HF4-X-LC	60NSS-HF4-X-C
60NSS-6FH6-X-ATO 60NSS-HF6-X-LC	60NSS-HF6-X-C
60NSS-6FH9-X-ATO 60NSS-HF9-X-LC	60NSS-HF9-X-C
10NSS-2FH9-X-ATC 10NSS-MF9-X-LO	10NSS-MF9-X-O
10NSS-2FH12-X-ATC 10NSS-MF12-X-LO	10NSS-MF12-X-O
10NSS-2FH16-X-ATC 10NSS-MF16-X-LO	10NSS-MF16-X-O
10NSS-FNS12-X-ATC 10NSS-FNS12-X-LO	10NSS-FNS12-X-O
10NSS-FRT12-X-ATC 10NSS-FRT12-X-LO	10NSS-FRT12-X-O

Needle Valves and Pneumatic Needle Valves

Formerly Used P/N	New P/N Adopted
10NSS-FNS16-X-ATC 10NSS-FNS16-X-LO	10NSS-FNS16-X-O
10NSS-FRT16-X-ATC 10NSS-FRT16-X-LO	10NSS-FRT16-X-O
15NSS-DHL2-X-ATC 15NSS-DFF2-X-LO	15NSS-DFF2-X-O
15NSS-DHL4-X-ATC 15NSS-DFF4-X-LO	15NSS-DFF4-X-O
15NSS-DHL6-X-ATC 15NSS-DFF6-X-LO	15NSS-DFF6-X-O
15NSS-DHL8-X-ATC 15NSS-DFF8-X-LO	15NSS-DFF8-X-O
15NSS-FNS2-X-ATC 15NSS-FNS2-X-LO	15NSS-FNS2-X-O
15NSS-FRT2-X-ATC 15NSS-FRT2-X-LO	15NSS-FRT2-X-O
15NSS-FNS4-X-ATC 15NSS-FNS4-X-LO	15NSS-FNS4-X-O
15NSS-FRT4-X-ATC 15NSS-FRT4-X-LO	15NSS-FRT4-X-O
15NSS-FNS6-X-ATC 15NSS-FNS6-X-LO	15NSS-FNS6-X-O
15NSS-FRT6-X-ATC 15NSS-FRT6-X-LO	15NSS-FRT6-X-O
15NSS-FNS8-X-ATC 15NSS-FNS8-X-LO	15NSS-FNS8-X-O
15NSS-FRT8-X-ATC 15NSS-FRT8-X-LO	15NSS-FRT8-X-O
20NSS-2FH4-X-ATC 20NSS-MF4-X-LO	20NSS-MF4-X-O
20NSS-2FH6-X-ATC 20NSS-MF6-X-LO	20NSS-MF6-X-O
20NSS-2FH9-X-ATC 20NSS-MF9-X-LO	20NSS-MF9-X-O
20NSS-2FH12-X-ATC 20NSS-MF12-X-LO	20NSS-MF12-X-O
20NSS-2FH16-X-ATC 20NSS-MF16-X-LO	20NSS-MF16-X-O
30NSS-6FH4-X-ATC 30NSS-HF4-X-LO	30NSS-HF4-X-O
30NSS-6FH6-X-ATC 30NSS-HF6-X-LO	30NSS-HF6-X-O
30NSS-6FH9-X-ATC 30NSS-HF9-X-LO	30NSS-HF9-X-O
60NSS-6FH4-X-ATC 60NSS-HF4-X-LO	60NSS-HF4-X-O
60NSS-6FH6-X-ATC 60NSS-HF6-X-LO	60NSS-HF6-X-O
60NSS-6FH9-X-ATC 60NSS-HF9-X-O	60NSS-HF9-X-O

Check Valves

Formerly Used P/N	New P/N Adopted
10CSS-FNS12	10CSS-FNS12
10CSS-FNS16	10CSS-FNS16
10COSS-FNS12	10COSS-FNS12
10COSS-FNS16	10COSS-FNS16
15CSS-DHL4	15CSS-DFF4
15CSS-DHL6	15CSS-DFF6
15CSS-DHL8	15CSS-DFF8
15CSS-FNS4	15CSS-FNS4
15CSS-FNS6	15CSS-FNS6
15CSS-FNS8	15CSS-FNS8
15COSS-DHL4	15COSS-DFF4
15COSS-DHL6	15COSS-DFF6
15COSS-DHL8	15COSS-DFF8
15COSS-FNS4	15COSS-FNS4
15COSS-FNS6	15COSS-FNS6
15COSS-FNS8	15COSS-FNS8
20CSS-2FH4	20CSS-MF4
20CSS-2FH6	20CSS-MF6
20CSS-2FH9	20CSS-MF9
20CSS-2FH12	20CSS-MF12
20CSS-2FH16	20CSS-MF16
20COSS-2FH4	20COSS-MF4
20COSS-2FH6	20COSS-MF6
20COSS-2FH9	20COSS-MF9
20COSS-2FH12	20COSS-MF12

Check Valves

Formerly Used P/N	New P/N Adopted
20COSS-2FH16	20COSS-MF16
60CSS-6FH4	60CSS-HF4
60CSS-6FH6	60CSS-HF6
60CSS-6FH9	60CSS-HF9
60COSS-6FH4	60COSS-HF4
60COSS-6FH6	60COSS-HF6
60COSS-6FH9	60COSS-HF9

Metering Valves

Formerly Used P/N	New P/N Adopted
15MSS-DHL2	15MSS-DFF2
15MSS-DHL4	15MSS-DFF4
30MSS-6FH4	30MSS-HF4
60MSS-6FH4	60MSS-HF4
60MSS-6FH6	60MSS-HF6

Relief Valves

Formerly Used P/N	New P/N Adopted
HSRSS-2FH9-FNS12-1	HSRSS-MF9-FNS12-1
HSRSS-2FH9-FNS12-2	HSRSS-MF9-FNS12-2
HSRSS-2FH9-FNS12-3	HSRSS-MF9-FNS12-3
HMRSS-2FH9-FNS12-1	HMRSS-MF9-FNS12-1
HMRSS-2FH9-FNS12-2	HMRSS-MF9-FNS12-2
HMRSS-2FH9-FNS12-3	HMRSS-MF9-FNS12-3
HMRSS-2FH9-FNS12-4	HMRSS-MF9-FNS12-4
HMRSS-6FH6-FNS12-5	HMRSS-HF6-FNS12-5
HMRSS-6FH6-FNS12-6	HMRSS-HF6-FNS12-6
HMRSS-6FH6-FNS12-7	HMRSS-HF6-FNS12-7
HARSS-2FH9-FNS12-1	HARSS-MF9-FNS12-1
HARSS-2FH9-FNS12-2	HARSS-MF9-FNS12-2

Bleed Valves and Block & Bleed Valves

Formerly Used P/N	New P/N Adopted
15BVSS-DHM6-FNS2	15BVSS-DFT6-FNS2
15BVSS-DHM8-FNS2	15BVSS-DFT8-FNS2
15BVSS-DHM9-FNS2	15BVSS-DFT9-FNS2
20BVSS-2CT6-FNS2	20BVSS-MCT6-FNS2
20BVSS-2CT9-FNS2	20BVSS-MCT9-FNS2
30BVSS-6CT6-FNS2	30BVSS-HCT6-FNS2
30BVSS-6CT9-FNS2	30BVSS-HCT9-FNS2
20BVSS-2MP6-FNS2	20BVSS-MM6-FNS2
20BVSS-2MP9-FNS2	20BVSS-MM9-FNS2
30BVSS-6MP6-FNS2	30BVSS-HM6-FNS2
30BVSS-6MP9-FNS2	30BVSS-HM9-FNS2
15BNSS-FNS4	15BNSS-FNS4
15BNSS-FNS6	15BNSS-FNS6
20BNSS-2FH4	20BNSS-MF4
20BNSS-2FH6	20BNSS-MF6
20DBNSS-2FH4-2FH4	20DBNSS-MF4-MF4
20DBNSS-2FH6-2FH4	20DBNSS-MF6-MF4
20DBNSS-2FH9-2FH4	20DBNSS-MF9-MF4
20DBNSS-6FH9-2FH4	20DBNSS-HF9-MF4
15DBBSS-DHL8-FNS4-6	15DBBSS-DFF8-FNS4-6
15DBBSS-2FH4-2FH4-6	15DBBSS-MF4-MF4-6
15DBBSS-2FH6-2FH4-6	15DBBSS-MF6-MF4-6
15DBBSS-2FH9-2FH4-6	15DBBSS-MF9-MF4-6
15DBBSS-2FH9-FNS4-6	15DBBSS-MF9-FNS4-6
15DBBSS-2FH12-2FH4-6	15DBBSS-MF12-MF4-6
15DBBSS-2FH16-FNS4-6	15DBBSS-MF16-FNS4-6
15DBBSS-FNS4-FNS4-6	15DBBSS-FNS4-FNS4-6
15DBBSS-FNS6-FNS4-6	15DBBSS-FNS6-FNS4-6
15DBBSS-FNS8-FNS4-6	15DBBSS-FNS8-FNS4-6

Sour Service Products

Formerly Used P/N	New P/N Adopted
SS-CTN-2FH9-4-S	SS-T20M-9CT-4N-S
SS-CTN-2FH4-4-S	SS-T20M-4CT-4N-S
SS-CTN-2FH16-6-S	SS-T20M-16CT-6N-S
SS-CTN-2FH4-2.75-S	SS-T20M-4CT-2.75N-S
SS-CTN-2FH4-6-S	SS-T20M-4CT-6N-S
SS-CTN-2FH4-8-S	SS-T20M-4CT-8N-S
SS-CTN-2FH4-10-S	SS-T20M-4CT-10N-S
SS-CTN-2FH4-12-S	SS-T20M-4CT-12N-S
SS-CTN-2FH6-3-S	SS-T20M-6CT-3N-S
SS-CTN-2FH6-4-S	SS-T20M-6CT-4N-S
SS-CTN-2FH6-6-S	SS-T20M-6CT-6N-S
SS-CTN-2FH6-8-S	SS-T20M-6CT-8N-S
SS-CTN-2FH6-10-S	SS-T20M-6CT-10N-S
SS-CTN-2FH6-12-S	SS-T20M-6CT-12N-S
SS-CTN-2FH9-6-S	SS-T20M-9CT-6N-S
SS-CTN-2FH9-8-S	SS-T20M-9CT-8N-S
SS-CTN-2FH9-10-S	SS-T20M-9CT-10N-S
SS-CTN-2FH9-12-S	SS-T20M-9CT-12N-S
SS-CTN-2FH12-4-S	SS-T20M-12CT-4N-S
SS-CTN-2FH12-6-S	SS-T20M-12CT-6N-S
SS-CTN-2FH12-8-S	SS-T20M-12CT-8N-S
SS-CTN-2FH12-10-S	SS-T20M-12CT-10N-S
SS-CTN-2FH12-12-S	SS-T20M-12CT-12N-S
SS-CTN-2FH16-8-S	SS-T20M-16CT-8N-S
SS-CTN-2FH16-10-S	SS-T20M-16CT-10N-S
SS-CTN-2FH16-12-S	SS-T20M-16CT-12N-S
SS-CTN-6FH4-2.75-S	SS-T60H-4CT-2.75N-S
SS-CTN-6FH4-3-S	SS-T60H-4CT-3N-S
SS-CTN-6FH4-4-S	SS-T60H-4CT-4N-S
SS-CTN-6FH4-6-S	SS-T60H-4CT-6N-S
SS-CTN-6FH4-8-S	SS-T60H-4CT-8N-S
SS-CTN-6FH4-10-S	SS-T60H-4CT-10N-S
SS-CTN-6FH4-12-S	SS-T60H-4CT-12N-S
SS-CTN-6FH6-3-S	SS-T60H-6CT-3N-S
SS-CTN-6FH6-4-S	SS-T60H-6CT-4N-S
SS-CTN-6FH6-6-S	SS-T60H-6CT-6N-S
SS-CTN-6FH6-8-S	SS-T60H-6CT-8N-S
SS-CTN-6FH6-10-S	SS-T60H-6CT-10N-S
SS-CTN-6FH6-12-S	SS-T60H-6CT-12N-S
SS-CTN-6FH9-6-S	SS-T60H-9CT-6N-S
SS-CTN-6FH9-8-S	SS-T60H-9CT-8N-S
SS-CTN-6FH9-10-S	SS-T60H-9CT-10N-S
SS-CTN-6FH9-12-S	SS-T60H-9CT-12N-S
15NSS-FNS2-1-S	15NSS-FNS2-1-S
15NSS-FRT2-1-S	15NSS-FRT2-1-S
15NSS-FNS4-1-S	15NSS-FNS4-1-S
15NSS-FRT4-1-S	15NSS-FRT4-1-S
15NSS-FNS6-1-S	15NSS-FNS6-1-S
15NSS-FRT6-1-S	15NSS-FRT6-1-S
15NSS-FNS8-1-S	15NSS-FNS8-1-S
15NSS-FRT8-1-S	15NSS-FRT8-1-S
15NSS-FNS2-2-S	15NSS-FNS2-2-S
15NSS-FRT2-2-S	15NSS-FRT2-2-S
15NSS-FNS4-2-S	15NSS-FNS4-2-S
15NSS-FRT4-2-S	15NSS-FRT4-2-S
15NSS-FNS6-2-S	15NSS-FNS6-2-S
15NSS-FRT6-2-S	15NSS-FRT6-2-S
15NSS-FNS8-2-S	15NSS-FNS8-2-S
15NSS-FRT8-2-S	15NSS-FRT8-2-S
15NSS-FNS2-4-S	15NSS-FNS2-4-S
15NSS-FRT2-4-S	15NSS-FRT2-4-S
15NSS-FNS4-4-S	15NSS-FNS4-4-S
15NSS-FRT4-4-S	15NSS-FRT4-4-S
15NSS-FNS6-4-S	15NSS-FNS6-4-S
15NSS-FRT6-4-S	15NSS-FRT6-4-S
15NSS-FNS8-4-S	15NSS-FNS8-4-S
15NSS-FRT8-4-S	15NSS-FRT8-4-S
15NSS-FNS2-5-S	15NSS-FNS2-5-S
15NSS-FRT2-5-S	15NSS-FRT2-5-S
15NSS-FNS4-5-S	15NSS-FNS4-5-S
15NSS-FRT4-5-S	15NSS-FRT4-5-S
15NSS-FNS6-5-S	15NSS-FNS6-5-S
15NSS-FRT6-5-S	15NSS-FRT6-5-S
15NSS-FNS8-5-S	15NSS-FNS8-5-S
15NSS-FRT8-5-S	15NSS-FRT8-5-S
15NSS-FNS2-6-S	15NSS-FNS2-6-S
15NSS-FRT2-6-S	15NSS-FRT2-6-S
15NSS-FNS4-6-S	15NSS-FNS4-6-S

Sour Service Products

Formerly Used P/N	New P/N Adopted
15NSS-FRT4-6-S	15NSS-FRT4-6-S
15NSS-FNS6-6-S	15NSS-FNS6-6-S
15NSS-FRT6-6-S	15NSS-FRT6-6-S
15NSS-FNS8-6-S	15NSS-FNS8-6-S
15NSS-FRT8-6-S	15NSS-FRT8-6-S
20NSS-2FH4-1-S	20NSS-MF4-1-S
20NSS-2FH6-1-S	20NSS-MF6-1-S
20NSS-2FH9-1-S	20NSS-MF9-1-S
20NSS-2FH12-1-S	20NSS-MF12-1-S
20NSS-2FH16-1-S	20NSS-MF16-1-S
20NSS-2FH4-2-S	20NSS-MF4-2-S
20NSS-2FH6-2-S	20NSS-MF6-2-S
20NSS-2FH9-2-S	20NSS-MF9-2-S
20NSS-2FH12-2-S	20NSS-MF12-2-S
20NSS-2FH16-2-S	20NSS-MF16-2-S
20NSS-2FH4-3-S	20NSS-MF4-3-S
20NSS-2FH6-3-S	20NSS-MF6-3-S
20NSS-2FH9-3-S	20NSS-MF9-3-S
20NSS-2FH12-3-S	20NSS-MF12-3-S
20NSS-2FH16-3-S	20NSS-MF16-3-S
20NSS-2FH4-4-S	20NSS-MF4-4-S
20NSS-2FH6-4-S	20NSS-MF6-4-S
20NSS-2FH9-4-S	20NSS-MF9-4-S
20NSS-2FH12-4-S	20NSS-MF12-4-S
20NSS-2FH16-4-S	20NSS-MF16-4-S
20NSS-2FH4-5-S	20NSS-MF4-5-S
20NSS-2FH6-5-S	20NSS-MF6-5-S
20NSS-2FH9-5-S	20NSS-MF9-5-S
20NSS-2FH12-5-S	20NSS-MF12-5-S
20NSS-2FH16-5-S	20NSS-MF16-5-S
20NSS-2FH4-6-S	20NSS-MF4-6-S
20NSS-2FH6-6-S	20NSS-MF6-6-S
20NSS-2FH9-6-S	20NSS-MF9-6-S
20NSS-2FH12-6-S	20NSS-MF12-6-S
20NSS-2FH16-6-S	20NSS-MF16-6-S
30NSS-6FH4-1-S	30NSS-HF4-1-S
30NSS-6FH6-1-S	30NSS-HF6-1-S
30NSS-6FH9-1-S	30NSS-HF9-1-S
30NSS-6FH4-2-S	30NSS-HF4-2-S
30NSS-6FH6-2-S	30NSS-HF6-2-S
30NSS-6FH9-2-S	30NSS-HF9-2-S
30NSS-6FH4-3-S	30NSS-HF4-3-S
30NSS-6FH6-3-S	30NSS-HF6-3-S
30NSS-6FH9-3-S	30NSS-HF9-3-S
30NSS-6FH4-4-S	30NSS-HF4-4-S
30NSS-6FH6-4-S	30NSS-HF6-4-S
30NSS-6FH9-4-S	30NSS-HF9-4-S
30NSS-6FH4-5-S	30NSS-HF4-5-S
30NSS-6FH6-5-S	30NSS-HF6-5-S
30NSS-6FH9-5-S	30NSS-HF9-5-S
30NSS-6FH4-6-S	30NSS-HF4-6-S
30NSS-6FH6-6-S	30NSS-HF6-6-S
30NSS-6FH9-6-S	30NSS-HF9-6-S
60NSS-6FH4-TG1-S	60NSS-HF4-TG1-S
60NSS-6FH6-TG1-S	60NSS-HF6-TG1-S
60NSS-6FH9-TG1-S	60NSS-HF9-TG1-S
60NSS-6FH4-TG2-S	60NSS-HF4-TG2-S
60NSS-6FH6-TG2-S	60NSS-HF6-TG2-S
60NSS-6FH9-TG2-S	60NSS-HF9-TG2-S
60NSS-6FH4-TG3-S	60NSS-HF4-TG3-S
60NSS-6FH6-TG3-S	60NSS-HF6-TG3-S
60NSS-6FH9-TG3-S	60NSS-HF9-TG3-S
60NSS-6FH4-TG4-S	60NSS-HF4-TG4-S
60NSS-6FH6-TG4-S	60NSS-HF6-TG4-S
60NSS-6FH9-TG4-S	60NSS-HF9-TG4-S
60NSS-6FH4-TG5-S	60NSS-HF4-TG5-S
60NSS-6FH6-TG5-S	60NSS-HF6-TG5-S
60NSS-6FH9-TG5-S	60NSS-HF9-TG5-S
60NSS-6FH4-TG6-S	60NSS-HF4-TG6-S
60NSS-6FH6-TG6-S	60NSS-HF6-TG6-S
60NSS-6FH9-TG6-S	60NSS-HF9-TG6-S
20BVSS-2CT6-FNS2-S	20BVSS-MCT6-FNS2-S
20BVSS-2CT9-FNS2-S	20BVSS-MCT9-FNS2-S
30BVSS-6CT6-FNS2-S	30BVSS-HCT6-FNS2-S
30BVSS-6CT9-FNS2-S	30BVSS-HCT9-FNS2-S
20BVSS-2MP6-FNS2-S	20BVSS-MM6-FNS2-S
20BVSS-2MP9-FNS2-S	20BVSS-MM9-FNS2-S
30BVSS-6MP6-FNS2-S	30BVSS-HM6-FNS2-S

Sour Service Products

Formerly Used P/N	New P/N Adopted
30BVSS-6MP9-FNS2-S	30BVSS-HM9-FNS2-S
20GVSS-2FH9-S	20GVSS-MF9-S
30GVSS-6FH6-S	30GVSS-HF6-S
30GVSS-6FH9-S	30GVSS-HF9-S
15CSS-FNS4-S	15CSS-FNS4-S
15CSS-FNS8-S	15CSS-FNS8-S
15COSS-FNS4-S	15COSS-FNS4-S
15COSS-FNS6-S	15COSS-FNS6-S
15COSS-FNS8-S	15COSS-FNS8-S
20CSS-2FH4-S	20CSS-MF4-S
20CSS-2FH6-S	20CSS-MF6-S
20CSS-2FH12-S	20CSS-MF12-S
20CSS-2FH16-S	20CSS-MF16-S
20COSS-2FH4-S	20COSS-MF4-S
20COSS-2FH6-S	20COSS-MF6-S
20COSS-2FH9-S	20COSS-MF9-S
20COSS-2FH12-S	20COSS-MF12-S
20COSS-2FH16-S	20COSS-MF16-S
60CSS-6FH4-S	60CSS-HF4-S
60CSS-6FH6-S	60CSS-HF6-S
60CSS-6FH9-S	60CSS-HF9-S
60COSS-6FH6-S	60COSS-HF6-S
60COSS-6FH9-S	60COSS-HF9-S

Subsea Valves

Formerly Used P/N	New P/N Adopted
10SBSS-2FH12-8-1	10SBSS-MF12-8-1
10SBSS-2FH16-8-1	10SBSS-MF16-8-1
10SBSS-FNS12-8-1	10SBSS-FNS12-8-1
10SBSS-FNS16-8-1	10SBSS-FNS16-8-1
10SB4P-2FH24-16-1	10SB4P-MF24-16-1
10SBSS-2FH12-8-2	10SBSS-MF12-8-2
15SBSS-DHL4-4-1	15SBSS-DFF4-4-1
15SBSS-DHL6-4-1	15SBSS-DFF6-4-1
15SBSS-FNS4-4-1	15SBSS-FNS4-4-1
15SBSS-FNS6-4-1	15SBSS-FNS6-4-1
15SBSS-FNS8-4-1	15SBSS-FNS8-4-1
15SBSS-FNS4-6-1	15SBSS-FNS4-6-1
15SBSS-FNS6-6-1	15SBSS-FNS6-6-1
15SBSS-FNS8-6-1	15SBSS-FNS8-6-1
15SBSS-2FH12-8-1	15SBSS-MF12-8-1
15SBSS-FNS4-4-2	15SBSS-FNS4-4-2
15SBSS-FNS4-4-2D	15SBSS-FNS4-4-2D
15SBSS-FNS6-4-2	15SBSS-FNS6-4-2
15SBSS-FNS6-4-2D	15SBSS-FNS6-4-2D
20SBSS-2FH4-4-1	20SBSS-MF4-4-1
20SBSS-2FH6-4-1	20SBSS-MF6-4-1
20SBSS-2FH9-4-1	20SBSS-MF9-4-1
20SBSS-6FH4-4-1	20SBSS-HF4-4-1
20SBSS-6FH6-4-1	20SBSS-HF6-4-1
20SBSS-2FH6-6-1	20SBSS-MF6-6-1
20SBSS-2FH9-6-1	20SBSS-MF9-6-1
20SBSS-2FH12-6-1	20SBSS-MF12-6-1
20SBSS-2FH4-4-2	20SBSS-MF4-4-2
20SBSS-2FH4-4-2D	20SBSS-MF4-4-2D
20SBSS-2FH6-4-2	20SBSS-MF6-4-2
20SBSS-2FH6-4-2D	20SBSS-MF6-4-2D
20SBSS-2FH9-4-2	20SBSS-MF9-4-2
20SBSS-2FH9-4-2D	20SBSS-MF9-4-2D
20SBSS-6FH4-4-2	20SBSS-HF4-4-2
20SBSS-6FH4-4-2D	20SBSS-HF4-4-2D
20SBSS-6FH6-4-2	20SBSS-HF6-4-2
20SBSS-6FH6-4-2D	20SBSS-HF6-4-2D
10SCSS-FNS12	10SCSS-FNS12
10SCSS-FNS16	10SCSS-FNS16
10SCOSS-FNS12	10SCOSS-FNS12
10SCOSS-FNS16	10SCOSS-FNS16
15SCSS-DHL4	15SCSS-DFF4
15SCSS-DHL6	15SCSS-DFF6
15SCSS-DHL8	15SCSS-DFF8
15SCOSS-DHL4	15SCOSS-DFF4
15SCOSS-DHL6	15SCOSS-DFF6
15SCOSS-DHL8	15SCOSS-DFF8
15SCSS-FNS4	15SCSS-FNS4
15SCSS-FNS6	15SCSS-FNS6
15SCSS-FNS8	15SCSS-FNS8
15SCOSS-FNS4	15SCOSS-FNS4
15SCOSS-FNS6	15SCOSS-FNS6
15SCOSS-FNS8	15SCOSS-FNS8
20SCSS-2FH4	20SCSS-MF4
20SCSS-2FH6	20SCSS-MF6
20SCSS-2FH9	20SCSS-MF9
20SCSS-2FH12	20SCSS-MF12
20SCSS-2FH16	20SCSS-MF16
20SCOSS-2FH4	20SCOSS-MF4
20SCOSS-2FH6	20SCOSS-MF6
20SCOSS-2FH9	20SCOSS-MF9
20SCOSS-2FH12	20SCOSS-MF12
20SCOSS-2FH16	20SCOSS-MF16
20SNSS-2FH6-1	20SNSS-MF6-1
20SNSS-2FH9-1	20SNSS-MF9-1
20SNSS-2FH12-1	20SNSS-MF12-1
20SNSS-2FH6-2	20SNSS-MF6-2
20SNSS-2FH9-2	20SNSS-MF9-2
20SNSS-2FH12-2	20SNSS-MF12-2
15SDCSS-3P4W-2FH9-US7	15SDCSS-3P4W-MF9-US7
15SDCSS-3P4W-2FH9-6-US7	15SDCSS-3P4W-MF9-6-US7
15SDCSS-2P3W-2FH9-US7	15SDCSS-2P3W-MF9-US7
15SDCSS-2P3W-2FH9-6-US7	15SDCSS-2P3W-MF9-6-US7

Warranty Information

FITOK products are backed by The FITOK Limited Lifetime Warranty. For a copy, contact FITOK Group or our authorized distributors.

info@fitok.com
www.fitok.com

Copyright © 2025 FITOK Group

FK-FC-H-01-EN-25V1