FITOK

Full Technical Catalog for General Instrumentation

FITOK Full Technical Catalog

For General Instrumentation

www.fitok.com

Fittings



Manifolds



Hoses and Quick-Connects



FITOK

Valves and Filters



Vessels and Sample Cylinders



Tubing, Tubing Tools and Other Elements



FITOK

A Fittings

6D Series Tube Fittings	A-02
37° Flared Tube Fittings	A-94
VL Series Vacuum Tube Fittings	A-110
6P Series Pipe Fittings	A-116
6W Series Weld Fittings	A-150

B Valves and Filters

Ball Valves	B-02
Plug Valves	B-68
Needle Valves	B-76
Metering Valves	B-118
Bellows-Sealed Valves	B-130
Check Valves	B-146
Proportional Relief Valves	B-161
Bleed Valves	B-172
Purge Valves	B-177
Filters	B-182

C Manifolds

Gauge Valves and Instrumentation Manifolds C-02

Block and Bleed Valves C-26

Air Headers and Distribution Manifolds C-72

D Hoses and Quick-Connects

Hoses and Connectors D-02

Quick-Connects D-29

E Condensate Pots and Sample Cylinders

Condensate Pots and Vessels E-02

Sampling Assemblies, Sample Cylinders and Accessories E-06

Sample Cylinders Compliant with TPED E-21

F Tubing, Tubing Tools and Other Elements

Tubing F-02

Tubing Tools F-18

Syphons F-26

Tube Fittings

6D Series Tube Fittings  A-02

37° Flared Tube Fittings  A-94

VL Series Vacuum Tube Fittings  A-110

6D Series Tube Fittings



Contents

Male Connectors - CM
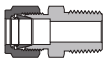
A-15

Bulkhead Male Connectors - BCM
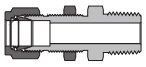
A-27

Thermocouple Connectors - TCM
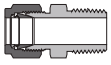
A-28

Chromatograph Fittings - U
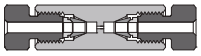
A-29

Chromatograph Fittings - TTT
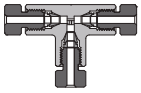
A-29

Column End Fittings - U
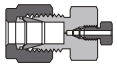
A-30

Female Connectors - CF
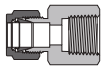
A-30

Bulkhead Female Connectors - BCF
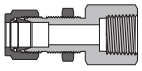
A-35

Unions - U

A-36

Conversion Unions - U
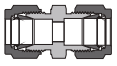
A-37

Reducing Unions - U
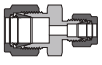
A-38

Bulkhead Unions - BU
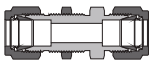
A-39

Bulkhead Reducing Unions - BU
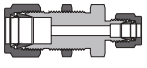
A-39

Bulkhead Conversion Unions - BU
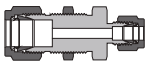
A-40

Weld Bulkhead Unions - BU
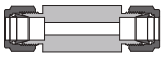
A-41

Bulkhead Locknuts - BN

A-41

Male Elbows - LM
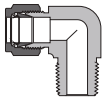
A-42

45° Male Elbows - VM
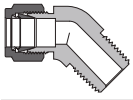
A-45

Positionable Male Elbows - LP
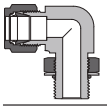
A-46

45° Positionable Male Elbows - VP
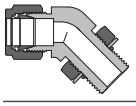
A-48

Female Elbows - LF
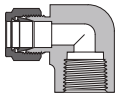
A-49

Union Elbows - LU
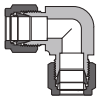
A-50

Union Reducing Elbows - LU
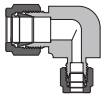
A-51

Bulkhead Union Elbows - BBLU
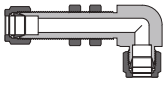
A-52

Male Branch Tees - TTM
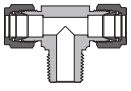
A-53

Contents

Male Run Tees - TMT

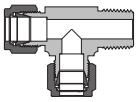

A-54

Positionable Male Branch Tees - TTP

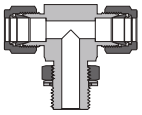

A-55

Positionable Male Run Tees - TPT

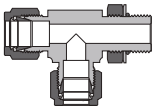

A-56

Female Branch Tees - TTF

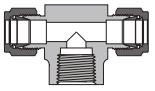

A-57

Female Run Tees - TFT

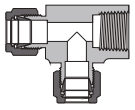

A-58

Union Tees - TTT

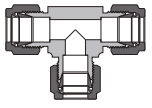

A-59

Reducing Union Tees - TTT

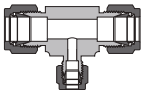

A-60

Union Crosses - C

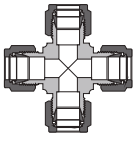

A-62

Caps - TC



A-62

Plugs - TP



A-63

Vent Protectors - VPF



A-63

Lapped Flange Connectors - LFC

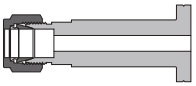

A-63

Female Nuts - N



A-64

Knurled Nuts



A-64

Male Nuts - MN



A-64

Front Ferrules - FF



A-65

Rear Ferrules - RF



A-65

Nut-Ferrule Sets - NFS



A-66

Ferrule Sets - FRS



A-66

Reducers - R

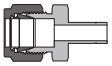

A-67

Bulkhead Reducers - BR

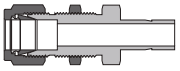

A-69

Reducer Elbows - LR

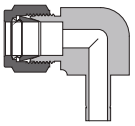

A-69

Contents

Reducer Tees - TRR

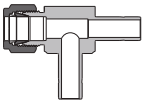

A-70

Reducer Branch Tees - TTR

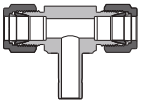

A-70

Reducer Run Tees - TRT

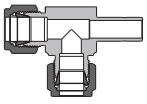

A-70

Reducer Double Run Tees - RRT

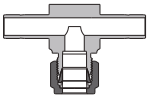

A-70

Insert for Soft Plastic Tubings - IN

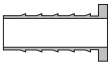

A-71

Port Connectors - P

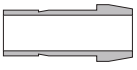

A-71

Reducing Port Connectors - P

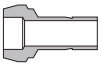

A-72

Sanitary Flange Fittings - SFF

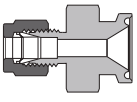

A-72

Male Adapters - AM

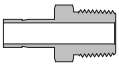

A-73

Female Adapters - AF

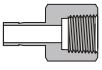

A-78

Weld Adapters - AW

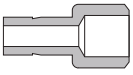

A-81

Flange Adapters - FA

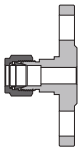

A-82

Weld Connectors - CW



A-84

Weld Elbows - LW

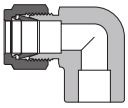

A-86

Calibration Fittings - FC

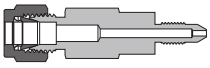

A-87

Dielectric Fittings - DF

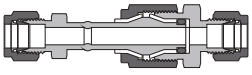

A-88

Visual Tube Fittings - SGF

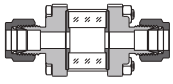

A-89

RS, RSD Gaskets - RS, RSD



A-90

RP Gaskets - RP

A-90

RG Gaskets - RG

A-91

RJ Gaskets - RJ

A-91

O-rings - VI, BN



A-91

PTFE Tape Pipe Thread Sealant - PTS

A-92

Ordering Number Description

A-93

Features

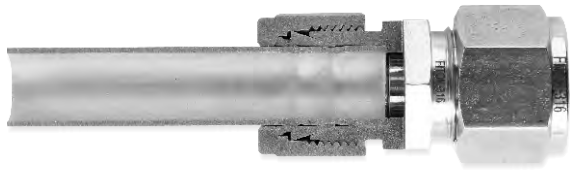

- ◎ Sizes range from 1/16" to 2" and 2 mm to 50 mm
- ◎ Diverse materials and configurations are available
- ◎ Precision machined components ensure perfect deformation of the ferrules and tubing
- ◎ Hardened threads with smooth surface finish avoid galling and help to extend the fitting service life
- ◎ Female nut threads are silver-plated to reduce the friction against the body threads
- ◎ Radius junction design for elbows provides smooth flow path
- ◎ Every fitting is marked with size, material and heat number
- ◎ Fittings are easy to disconnect and retighten
- ◎ 1/8" to 5/8", 3 mm to 16 mm fittings available with EC-79 certification

Technical Data

◎ Thread Ends

NPT Threads (NPT)

◎ Comply with ASME B1.20.1, SAE AS71051.

Thread Data

Thread Size	Thread/in.	Dia. at Reference Plane (mm)			Handtight Engagement	
		Max. Dia.	Pitch Dia.	Min. Dia.	(mm)	Threads
1/16	27	7.894	7.142	6.389	4.064	4.32
1/8		10.242	9.489	8.737	4.102	4.36
1/4	18	13.616	12.487	11.358	5.785	4.10
3/8		17.055	15.926	14.797	6.096	4.32
1/2	14	21.224	19.772	18.321	8.128	4.48
3/4		26.569	25.117	23.666	8.618	4.75
1	11.5	33.228	31.461	29.694	10.160	4.60
1 1/4		41.985	40.218	38.451	10.668	4.83
1 1/2		48.054	46.287	44.520	10.668	4.83
2		60.092	58.325	56.558	11.065	5.01

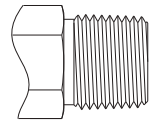

- ☐ 60° thread angle
- ☐ Pitch measured in inch
- ☐ Truncation of root and crest are parallel
- ☐ Taper 1:16
- ☐ Type of sealing: thread sealant

Working Pressures of NPT Thread Ends

Thread Size	316 Stainless Steel and Carbon Steel				Brass				Alloy 400				Titanium			
	Male		Female		Male		Female		Male		Female		Male		Female	
	psig	bar	psig	bar	psig	bar	psig	bar	psig	bar	psig	bar	psig	bar	psig	bar
1/16	11000	757	6700	460	5500	378	3300	227	9900	682	6000	413	8800	606	5300	365
1/8	10000	690	6500	447	5000	344	3200	220	9000	620	5800	399	8000	551	5200	358
1/4	8000	551	6600	454	4000	275	3300	227	7200	496	5900	406	6400	440	5200	358
3/8	7800	537	5300	365	3900	268	2600	179	7000	482	4700	323	6200	427	4200	289
1/2	7700	530	4900	337	3800	261	2400	165	6900	475	4400	303	6100	420	3900	268
3/4	7300	502	4600	316	3600	248	2300	158	6500	447	4100	282	5800	399	3600	248
1	5300	365	4400	303	2600	179	2200	151	4700	323	3900	268	4200	289	3500	241
1 1/4	6000	410	5000	344	3000	200	2500	172	5400	372	4500	372	4800	330	4000	275
1 1/2	5000	344	4600	317	2500	172	2300	158	4500	310	4100	282	4000	275	3600	248
2	3900	268	3900	268	1900	130	1900	130	3500	241	3500	241	3100	213	3100	213

Working pressure is based on ANSI/ASME B31.3 at ambient temperature.

Working Pressures of NPT Thread Ends

Thread Size	Alloy 2507 and Alloy 625				6-Molybdenum				Alloy 825			
	Male		Female		Male		Female		Male		Female	
	psig	bar	psig	bar	psig	bar	psig	bar	psig	bar	psig	bar
1/16	15000	1033	12900	888	14900	1026	9000	620	12800	881	7800	537
1/8	15000	1033	12500	861	13500	930	8800	606	11600	799	7500	516
1/4	15000	1033	12700	875	10800	744	8900	613	9300	640	7600	523
3/8	15000	1033	10200	702	10500	723	7100	489	9000	620	6100	420
1/2	14800	1019	9400	647	10400	716	6600	454	8900	613	5700	392
3/4	10000	689	8900	613	9800	675	6200	427	8500	585	5300	365
1	10000	689	8500	585	7100	489	5900	406	6100	420	5100	351
1 1/4	10000	689	9600	661	8100	558	6700	461	6900	475	5800	399
1 1/2	9600	661	8900	613	6700	461	6200	427	5800	399	5300	365
2	7500	516	7500	516	5200	358	5200	358	4500	310	4500	310

Working pressure is based on ANSI/ASME B31.3 at ambient temperature.

ISO Tapered Threads (R, R1, R2, RC, RT, PT, BSPT, ZG)

◎ Comply with ISO 7-1, EN 10226-1, BS 21, DIN 2999, JIS B0203.

Thread Data

Thread Size	Thread/ in.	Dia. at Reference Plane (mm)			Gauge Length	
		Max. Dia.	Pitch Dia.	Min. Dia.	(mm)	Threads
1/16	28	7.723	7.142	6.561	4.0	4.4
1/8		9.728	9.147	8.566	4.0	4.4
1/4	19	13.157	12.301	11.445	6.0	4.5
3/8		16.662	15.806	14.950	6.4	4.8
1/2	14	20.955	19.793	18.631	8.2	4.5
3/4		26.441	25.279	24.117	9.5	5.2
1	11	33.249	31.770	30.291	10.4	4.5
1 1/4		41.910	40.431	38.952	12.7	5.5
1 1/2		47.803	46.324	44.845	12.7	5.5
2		59.614	58.135	56.656	15.9	6.9

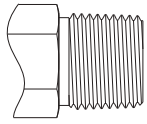

☐ 55° thread angle
☐ Pitch measured in inch
☐ Truncation of root and crest are round
☐ Taper 1:16
☐ Type of sealing: thread sealant

Working Pressures of ISO Tapered Thread Ends

The working pressures of ISO tapered thread ends are the same as those of the NPT thread ends.

ISO Parallel Threads (G, RP, PF, BSPP)

◎ Comply with ISO 228-1, DIN ISO 228-1, JIS B0202, BS 2779.

Thread Data

Thread Size	Thread/ in.	Basic Dia. (mm)		
		Max. Dia.	Pitch Dia.	Min. Dia.
1/16	28	7.723	7.142	6.561
1/8		9.728	9.147	8.566
1/4	19	13.157	12.301	11.445
3/8		16.662	15.806	14.950
1/2	14	20.955	19.793	18.631
5/8		22.911	21.749	20.587
3/4		26.441	25.279	24.117
7/8		30.201	29.039	27.877
1	11	33.249	31.770	30.291
1 1/8		37.897	36.418	34.939
1 1/4		41.910	40.431	38.952
1 1/2		47.803	46.324	44.845
1 3/4		53.746	52.267	50.788
2		59.614	58.135	56.656

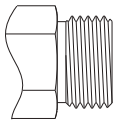

☐ 55° thread angle
☐ Pitch measured in inch
☐ Truncation of root and crest are round

Types of Sealing for ISO Parallel Threads

1. RS Stud End, RS Gasket and RP Port

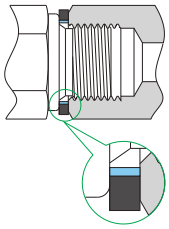

- ☐ RS stud end complies with DIN 3852-2 type A
- ☐ For RS gasket, see page A-87
- ☐ RP port complies with DIN 3852-2 type X

2. RP Stud End, RP Gasket and RP Port

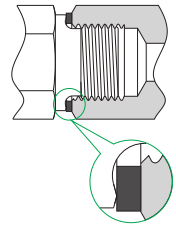

- ☐ RP stud end complies with DIN 3852-2 type B
- ☐ For RP gasket, see page A-87
- ☐ RP port complies with DIN 3852-2 type X

3. PP Stud End and RP Port

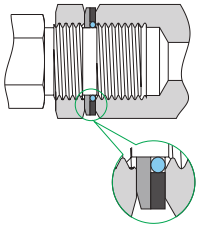

- ☐ PP Stud end complies with ISO 1179-3
- ☐ RP port complies with DIN 3852-2 type X

4. RG Port, RG Gasket and BP Stud End

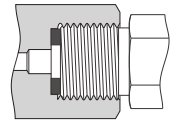

- ☐ RG port complies with EN 837-1/3
- ☐ For RG gasket, see page A-88

Working Pressures of Positionable ISO Parallel Thread Ends (PP)

Thread Size	316 Stainless Steel and Carbon Steel	
	psig	bar
1/8	4568	315
1/4		
3/8		
1/2	2320	160
3/4		
1		

SAE/MS Straight Threads (UN, UNJ)

◎ Comply with ASME B1.1, ISO R725.

Thread Data

Thread Size	Thread/ in.	Basic Dia. (mm)		
		Max. Dia.	Pitch Dia.	Min. Dia.
5/16-24	24	7.938	7.249	6.792
3/8-24	24	9.525	8.837	8.380
7/16-20	20	11.113	10.287	9.738
1/2-20	20	12.700	11.875	11.326
9/16-18	18	14.288	13.325	12.761
3/4-16	16	19.050	18.019	17.330
7/8-14	14	22.225	21.046	20.262
1 1/16-12	12	26.988	25.613	24.719
1 3/16-12	12	30.163	28.788	27.871
1 5/16-12	12	33.338	31.963	31.046
1 5/8-12	12	41.275	39.901	38.984
1 7/8-12	12	47.625	46.251	45.324
2 1/2-12	12	63.500	62.126	61.209

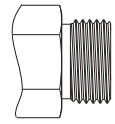

- ☐ 60° thread angle
- ☐ Pitch measured in inch
- ☐ Truncation of root and crest are parallel

Types of Sealing for SAE/MS Threads

1. ST/SH Stud End and SAE J1926-1 Port

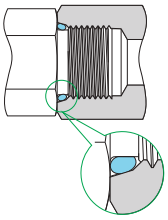

- ☐ ST stud end (light-duty) complies with SAE J1926-3
- ☐ SH stud end (heavy-duty) complies with SAE J1926-2
- ☐ For O-ring, see page A-89

2. 37° Flare (AN) Stud and Flared Tubing

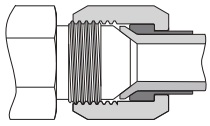

- ☐ The type of sealing complies with SAE J514
- ☐ Pressures refer to 37° Flared Tube Fittings Catalog

Working Pressures of SAE/MS Thread Ends

SAE Nominal Size	Thread Size	316 Stainless Steel and Carbon Steel							
		Light-Duty				Heavy-Duty			
		Non-Positionable		Positionable		Non-Positionable		Positionable	
		psig	bar	psig	bar	psig	bar	psig	bar
2	5/16-24	5075	350	5075	350	/	/	/	/
3	3/8-24					9135	630	6090	420
4	7/16-20			4568	315	9135	630	6090	420
5	1/2-20					9135	630	6090	420
6	9/16-18			4060	280	9135	630	6090	420
8	3/4-16	4568	315			9135	630	6090	420
10	7/8-14	3626	250	3045	210	9135	630	6090	420
12	1 1/16-12					6090	420	6090	420
14	1 3/16-12	3045	210	2538	175	6090	420	6090	420
16	1 5/16-12					6090	420	5075	350
20	1 5/8-12	2538	175	2030	140	4060	280	4060	280
24	1 7/8-12					4060	280	3045	210
32	2 1/2-12	2030	140	1523	105	3045	210	2537	175

Working pressures are based on SAE J1926-3 (light-duty) and SAE J1926-2 (heavy-duty) at ambient temperature.

Metric Threads (M)

◎ Comply with ISO 261.

Thread Data

Thread Size	Pitch (mm)	Basic Dia. (mm)		
		Max. Dia.	Pitch Dia.	Min. Dia.
M6 x 1	1	6.000	5.350	4.917
M8 x 1		8.000	7.350	6.917
M10 x 1		10.000	9.350	8.917
M12 x 1.5	1.5	12.000	11.026	10.376
M14 x 1.5		14.000	13.026	12.376
M16 x 1.5		16.000	15.026	14.376
M18 x 1.5		18.000	17.026	16.376
M20 x 1.5		20.000	19.026	18.376
M22 x 1.5		22.000	21.026	20.376
M24 x 1.5		24.000	23.026	22.376
M27 x 2	2	27.000	25.701	24.835
M30 x 2		30.000	28.701	27.835
M33 x 2		33.000	31.701	30.835
M36 x 2		36.000	34.701	33.835
M39 x 2		39.000	37.701	36.835
M42 x 2		42.000	40.701	39.835
M45 x 2		45.000	43.701	42.835
M48 x 2		48.000	46.701	45.835

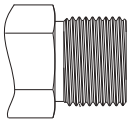

- ☐ 60° thread angle
- ☐ Pitch measured in mm
- ☐ Truncation of root and crest are parallel

FITOK

Types of Sealing for Metric Threads

1. MRS Stud End, RS-M gasket and MS Port

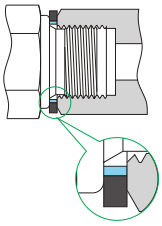

☐ MRS stud end complies with DIN 3852-1 type A

☐ For RS-M gasket, see page A-87

2. MS Stud End, RG-M gasket and MS Port

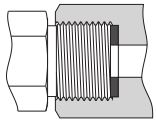

☐ For RG-M gasket, see page A-88

3. MST Stud End and ISO 6149-1 Port

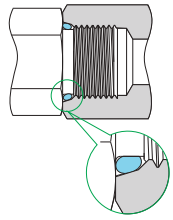

☐ MST stud end complies with ISO 6149-3

☐ For O-ring, see page A-89

Working Pressures for MST Stud Ends

Thread Size	Stainless Steel and Carbon Steel			
	Non-Positionable		Positionable	
	psig	bar	psig	bar
M8 x 1	5800	400	4568	315
M10 x 1				
M12 x 1.5				
M14 x 1.5				
M16 x 1.5	4568	315	3626	250
M18 x 1.5				
M22 x 1.5				
M27 x 2	2900	200	2320	160
M30 x 2				
M33 x 2				
M42 x 2				
M48 x 2				
M60 x 2	2320	160	1450	100

Working pressures are based on ISO 6149-3 at ambient temperature.

Butt Welding Ends

Dimensions and Wall Thickness of Pipes with Butt Welding Ends

Pipe Size		O.D.		Nominal Wall Thickness SCH80	
NPS	DN	in.	mm	in.	mm
1/8	6	0.405	10.3	0.095	2.41
1/4	8	0.540	13.7	0.119	3.02
3/8	10	0.675	17.1	0.126	3.20
1/2	15	0.840	21.3	0.147	3.73
3/4	20	1.050	26.7	0.154	3.91
1	25	1.315	33.4	0.179	4.55
1 1/4	32	1.660	42.2	0.191	4.85
1 1/2	40	1.900	48.3	0.200	5.08

For welding ends in other dimensions or with other wall thickness, please contact FITOK Group or our authorized distributors.

Working Temperatures

Thread Ends

The working temperatures of the thread ends may be limited by the Teflon tape or thread sealant or, when applicable, the gaskets or O-rings as follows:

Component	Material	Minimum Temperature	Maximum Temperature
RS Gasket	Buna N	-13°F (-25°C)	230°F (110°C)
	Fluorocarbon FKM	5°F (-15°C)	400°F (204°C)
RP/RG Gasket	Copper	-325°F (-198°C)	400°F (204°C)
	Stainless Steel	-425°F (-254°C)	1000°F (538°C)
RG Gasket	PTFE	-65°F (-54°C)	450°F (232°C)
	Vulcanized Fibre	-76°F (-60°C)	221°F (105°C)
O-ring	Buna N	-22°F (-30°C)	230°F (110°C)
	Fluorocarbon FKM	-4°F (-20°C)	400°F (204°C)

◎ Working Pressures

◎ The maximum working pressures of the tube ends at ambient temperature are determined by the maximum working pressure of the FITOK Tubing that is used. Refer to *Tubing* on F-02.

◎ The maximum working pressures of the thread ends at ambient temperature are stated as above.

◎ To get the maximum working pressure at elevated temperature, use the maximum working pressure at ambient temperature to multiply the factors in the table of Elevated Temperature Factors on F-15.

◎ The maximum working pressure of the whole fitting is determined by the end connection with the lowest pressure rating.

Materials

Material	Bar Stock	Forging	Designator
316 stainless steel	ASTM A479, ASME SA479, EN 1.4401	ASTM A182, ASME SA182, EN 1.4401	SS
316L stainless steel	ASTM A479, ASME SA479, EN 1.4404	ASTM A182, ASME SA182, EN 1.4404	6L
304 stainless steel	ASTM A479, ASME SA479, EN 1.4301	ASTM A182, ASME SA182, EN 1.4301	S4
321 stainless steel	ASTM A479, ASME SA479, EN 1.4541	ASTM A182, ASME SA182, EN 1.4541	S1
316Ti stainless steel	ASTM A479, ASME SA479, EN 1.4571	ASTM A182, ASME SA182, EN 1.4571	6T
6Mo (S31254)	ASTM A479	ASTM A182	S12
904L stainless steel	ASTM A479	ASTM A182	904L
Titanium (grade 4)	ASTM B348	ASTM B381	TI
Duplex 2205	ASTM A479	ASTM A182	D5
Super duplex 2507	ASTM A479	ASTM A182	D7
Alloy 20	ASTM A479	ASTM B462	A20
Alloy 400	ASTM B164, ASME SB164	ASTM B564, ASME SB564	M
Alloy 600	ASTM B166, ASME SB166	ASTM B564, ASME SB564	INC
Alloy 625	ASTM B446	ASTM B564, ASME SB564	A65
Alloy 718	ASTM B637	ASTM B637	A78
Alloy 825	ASTM B425	ASTM B564	A85
Alloy C-276	ASTM B574	ASTM B564	HC
Carbon steel	ASTM A108	ASTM A105	CS
Brass	ASTM B16/B453	ASTM B283	B
Nylon	ASTM D4066	/	PA
PTFE	ASTM D1710	/	T

Note: Normal materials are shown in bold and can be supplied rapidly while other materials are made-to-order. For lead time, please contact FITOK.

Pressure Rating Basis and Thread Specifications

Thread Type (End Connection)	Pressure Rating Basis	Thread Type	Reference Specification
Tube Fittings	Tube fitting ends are rated to the working pressure of tubing as listed in Tubing on F-02.	Unified Inch Screw Threads	ASME B1.1
NPT	ASME B31.3, Process Piping or pressure testing with a 4:1 design factor based on hydraulic fluid leakage.	NPT	ASME B1.20.1, SAE AS71051
ISO/BSP (tapered)	ASME B31.3, Process Piping or pressure testing with a 4:1 design factor based on hydraulic fluid leakage.	ISO/BSP (tapered)	ISO 7, BS EN 10226-1, JIS B0203
ISO/BSP (parallel)	ISO 1179-3, ISO 228-1 Threads with Light-Duty Stud Ends with Sealing by O-ring with Retaining Ring (types G and H) or pressure testing with a 4:1 design factor based on hydraulic fluid leakage.	ISO/BSP (parallel)	ISO 228, JIS B0202
ISO/BSP (parallel)	ISO 1179-4, ISO 228-1 Threads with Stud Ends for general use only with metal-to-metal sealing (type B) or pressure testing with a 4:1 design factor based on hydraulic fluid leakage.	ISO/BSP (parallel)	ISO 228, JIS B0202
ISO/BSP (gauge) (Based on EN 837-1 and 837-3)	ASME B31.3, Process Piping or pressure testing with a 4:1 design factor based on hydraulic fluid leakage.	ISO/BSP (parallel)	ISO 228, JIS B0202
SAE-Light Duty	SAE J1926/3 Connections for General Use and Fluid Power-Ports and Stud Ends with ASME B1.1 Threads and O-ring Sealing-Part 3: Light-Duty (L-Series) Stud Ends or pressure testing with a 4:1 design factor based on hydraulic fluid leakage.	Unified Inch Screw Threads	ASME B1.1
SAE-Heavy Duty	SAE J1926/2, Connections for General Use and Fluid Power-Ports and Stud Ends with ASME B1.1 Threads and O-ring Sealing-Part 2: Heavy-Duty (S-Series) or pressure testing with a 4:1 design factor based on hydraulic fluid leakage.	Unified Inch Screw Threads	ASME B1.1
AN Fittings	SAE J514, Hydraulic Tube Fittings or pressure testing with a 4:1 design factor based on hydraulic fluid leakage.	Unified Inch Screw Threads	ASME B1.1 UNJ, SAE AS 8879

Installation Instructions

FITOK Tube Fittings up to 1" or 25 mm

◎ Manual Installation

Initial installation

1. Loosen the nut 1/4 turn from finger-tight position.
2. Insert tubing into the tube fitting, make sure that the tubing rests firmly on the shoulder of the port.
3. Finger-tighten the nut.
4. Tighten the nut 1 1/4 turns with wrench while holding the body of the fitting or the valve steady (Fig.1).
   For small-sized fittings (1/16", 1/8" and 3/16", 2 mm, 3 mm and 4 mm), tighten the nut 3/4 turn with wrench (Fig.2).

Re-installation

1. Mark the tube at the back of the nut, mark a line along the nut and fitting body flats.
2. Insert tubing with preset ferrules into the fitting body until the front ferrule seats.
3. Hold the fitting body steady, then rotate the nut with a wrench to the previous pulled-up position as indicated by the marks on the tube and the flats.
4. Tighten the nut slightly with wrench.

◎ Installation with Manual Presetting Tool

Initial installation

1. Hold the presetting tool steady.
2. Install the nut and ferrules onto the presetting tool.
3. Insert tubing into the presetting tool, and make sure the tube rests firmly on the shoulder of the presetting tool.
4. Finger-tighten the nut.
5. Tighten the nut clockwise 1 1/4 turns with wrench (Fig.1); For small-sized fittings (1/16", 1/8" and 3/16", 2 mm, 3 mm and 4 mm), tighten the nut 3/4 turn with wrench (Fig.2).
6. Mark the tubing at the back of the nut before disassembling the fitting.
7. Loosen the nut and insert the tubing with preset ferrules into the fitting body until the front ferrule seats against the fitting body.
8. Hold the fitting body steady, then rotate the nut with a wrench to the previous tightening position as indicated by the mark on the tubing.
9. When you feel a significant increase in resistance, further tighten the nut slightly.

Re-installation

Same as the re-installation steps for manual installation for fittings up to 1" or 25 mm.

◎ Installation with Hydraulic Presetting Tool

Only applicable for tube fittings from 1/2" to 1" and 12 mm - 25 mm.

Initial installation

1. Preset the ferrules onto the tubing using FITOK Hydraulic Presetting Tool. For details, refer to Instructions of Hydraulic Presetting Tool.
2. Install the preset assembly (tubing, nut, front and back ferrules) into the fitting body. Finger tight the nut.
3. Further tighten the nut 1/2 turn with a wrench while holding the fitting body steady.

Re-installation

Same as the re-installation steps for manual installation for fittings up to 1" or 25 mm.

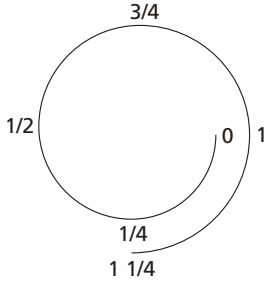

Fig.1

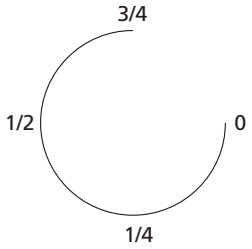

Fig.2

FITOK Tube Fittings over 1" or 25 mm

Initial installation

1. Preset the ferrules onto the tubing using FITOK Hydraulic Presetting Tool. For details, refer to Instructions of Hydraulic Presetting Tool.
2. Install the preset assembly (tubing, nut, front and back ferrules) into the fitting body. Finger tight the nut.
3. Further tighten the nut 1/2 turn with a wrench while holding the fitting body steady.

Re-installation

Same as the re-installation steps for manual installation for fittings up to 1" or 25 mm.

Plugs

Initial installation

Tighten the plug 1/4 turn from finger-tight position with wrench while holding the body of the fitting steady. For small-sized fittings (1/16", 1/8" and 3/16", 2 mm, 3 mm and 4 mm), tighten the nut 1/8 turn with wrench.

Re-installation

Tighten the plug slightly with wrench from finger-tight position.

Port Connectors

The initial installation and re-installation for the tube end is the same as those of tube fittings and the non-tube end same as those of the plug.

Cautions:

1. Do not loosen or tighten fittings when the system is pressurized.
2. Make sure that the tubing rests firmly on the shoulder of the port.
3. Always leave enough straight length of the tubing for the fittings.
4. Always use an insert for extremely soft plastic tubing.
5. Material of the metal tubing should be softer than that of the fitting. For example, stainless steel tubing should not be used with brass fittings. When tubing and fittings are made of the same material, the tubing must be fully annealed.
6. The allowable working pressure of the tube fitting is rated to the maximum working pressure of the corresponding tubing, which can be found in FITOK tubing data sheet. For those which can not be found in FITOK tubing data sheet, please contact FITOK Group or our authorized distributors for related information.
7. Keep the tubing end and surface clean and smooth.
8. Always use proper thread sealants on tapered pipe threads. Make sure that its working temperature does not exceed that of the sealants.
9. When assembling the tube fitting, hold the body with a wrench and turn the nut instead of holding the nut.
10. When installing a valve with tube fitting end, hold the valve body with a wrench and turn the nut.
11. When assembling the fitting to a valve with thread, hold the valve body with a wrench and turn the body of the fitting.
12. Gap Inspection Gauge is ONLY accurate for initial installation by manual operation.

Dimensions

Dimensions are for reference only and are subject to change; Dimensions are shown with FITOK nuts finger-tight.

Male Connectors

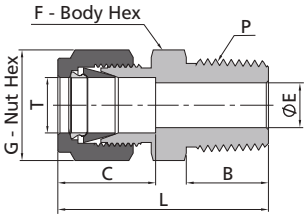

The E dimension refers to the smallest nominal orifice. It might be larger at tapered thread end, straight thread end.

Fractional Tube									NPT Thread
T-Tube O.D. (in.)	P-NPT Size	Basic Ordering Number	Dimensions, in. (mm)						
			L	B	C	E	G	F	
1/16	1/16	-CM-FL1-NS1	0.94(23.9)	0.38(9.7)	0.34(8.6)	0.05(1.3)	0.31(7.9)	0.31(7.9)	
1/16	1/8	-CM-FL1-NS2	1.03(26.2)	0.38(9.7)	0.34(8.6)	0.05(1.3)	0.31(7.9)	0.44(11.1)	
1/16	1/4	-CM-FL1-NS4	1.22(31.0)	0.56(14.2)	0.34 8.6)	0.05(1.3)	0.31(7.9)	0.56(14.3)	
1/8	1/16	-CM-FL2-NS1	1.17(29.7)	0.38(9.7)	0.50(12.7)	0.09(2.3)	0.44(11.1)	0.44(11.1)	
1/8	1/8	-CM-FL2-NS2	1.20(30.5)	0.38(9.7)	0.50(12.7)	0.09(2.3)	0.44(11.1)	0.44(11.1)	
1/8	1/4	-CM-FL2-NS4	1.40(35.6)	0.56(14.2)	0.50(12.7)	0.09(2.3)	0.44(11.1)	0.56(14.3)	
1/8	3/8	-CM-FL2-NS6	1.41(35.8)	0.56(14.2)	0.50(12.7)	0.09(2.3)	0.44(11.1)	0.69(17.5)	
1/8	1/2	-CM-FL2-NS8	1.66(42.2)	0.75(19.1)	0.50(12.7)	0.09(2.3)	0.44(11.1)	0.87(22.2)	
3/16	1/16	-CM-FL3-NS1	1.23(31.2)	0.38(9.7)	0.54(13.7)	0.12(3.0)	0.50(12.7)	0.44(11.1)	
3/16	1/8	-CM-FL3-NS2	1.23(31.2)	0.38(9.7)	0.54(13.7)	0.12(3.0)	0.50(12.7)	0.44(11.1)	
3/16	1/4	-CM-FL3-NS4	1.43(36.3)	0.56(14.2)	0.54(13.7)	0.12(3.0)	0.50(12.7)	0.56(14.3)	
1/4	1/16	-CM-FL4-NS1	1.29(32.8)	0.38(9.7)	0.60(15.2)	0.12(3.0)	0.56(14.3)	0.50(12.7)	
1/4	1/8	-CM-FL4-NS2	1.29(32.8)	0.38(9.7)	0.60(15.2)	0.19(4.8)	0.56(14.3)	0.50(12.7)	
1/4	1/4	-CM-FL4-NS4	1.49(37.8)	0.56(14.2)	0.60(15.2)	0.19(4.8)	0.56(14.3)	0.56(14.3)	
1/4	3/8	-CM-FL4-NS6	1.51(38.4)	0.56(14.2)	0.60(15.2)	0.19(4.8)	0.56(14.3)	0.69(17.5)	
1/4	1/2	-CM-FL4-NS8	1.76(44.7)	0.75(19.1)	0.60(15.2)	0.19(4.8)	0.56(14.3)	0.87(22.2)	
1/4	3/4	-CM-FL4-NS12	1.82(46.2)	0.75(19.1)	0.60(15.2)	0.19(4.8)	0.56(14.3)	1.06(27.0)	
5/16	1/8	-CM-FL5-NS2	1.34(34.0)	0.38(9.7)	0.64(16.3)	0.19(4.8)	0.63(15.9)	0.56(14.3)	
5/16	1/4	-CM-FL5-NS4	1.52(38.6)	0.38(9.7)	0.64(16.3)	0.25(6.4)	0.63(15.9)	0.56(14.3)	
5/16	3/8	-CM-FL5-NS6	1.54(39.1)	0.56(14.2)	0.64(16.3)	0.25(6.4)	0.63(15.9)	0.69(17.5)	
5/16	1/2	-CM-FL5-NS8	1.79(45.5)	0.75(19.1)	0.64(16.3)	0.25(6.4)	0.63(15.9)	0.87(22.2)	
3/8	1/8	-CM-FL6-NS2	1.39(35.3)	0.38(9.7)	0.66(16.8)	0.19(4.8)	0.69(17.5)	0.63(15.9)	
3/8	1/4	-CM-FL6-NS4	1.57(39.9)	0.56(14.2)	0.66(16.8)	0.28(7.1)	0.69(17.5)	0.63(15.9)	
3/8	3/8	-CM-FL6-NS6	1.57(39.9)	0.56(14.2)	0.66(16.8)	0.28(7.1)	0.69(17.5)	0.69(17.5)	
3/8	1/2	-CM-FL6-NS8	1.82(46.2)	0.75(19.1)	0.66(16.8)	0.28(7.1)	0.69(17.5)	0.87(22.2)	
3/8	3/4	-CM-FL6-NS12	1.88(47.8)	0.75(19.1)	0.66(16.8)	0.28(7.1)	0.69(17.5)	1.06(27.0)	
3/8	1	-CM-FL6-NS16	2.14(54.4)	0.94(23.9)	0.66(16.8)	0.28(7.1)	0.69(17.5)	1.37(34.9)	
1/2	1/8	-CM-FL8-NS2	1.53(38.9)	0.38(9.7)	0.90(22.9)	0.19(4.8)	0.87(22.2)	0.81(20.6)	
1/2	1/4	-CM-FL8-NS4	1.71(43.4)	0.56(14.2)	0.90(22.9)	0.28(7.1)	0.87(22.2)	0.81(20.6)	
1/2	3/8	-CM-FL8-NS6	1.71(43.4)	0.56(14.2)	0.90(22.9)	0.38(9.7)	0.87(22.2)	0.81(20.6)	
1/2	1/2	-CM-FL8-NS8	1.93(49.0)	0.75(19.1)	0.90(22.9)	0.41(10.4)	0.87(22.2)	0.87(22.2)	
1/2	3/4	-CM-FL8-NS12	1.99(50.5)	0.75(19.1)	0.90(22.9)	0.41(10.4)	0.87(22.2)	1.06(27.0)	
1/2	1	-CM-FL8-NS16	2.25(57.2)	0.94(23.9)	0.90(22.9)	0.41(10.4)	0.87(22.2)	1.37(34.9)	
5/8	1/4	-CM-FL10-NS4	1.74(44.2)	0.56(14.2)	0.96(24.4)	0.28(7.1)	1.00(25.4)	0.94(23.8)	
5/8	3/8	-CM-FL10-NS6	1.74(44.2)	0.56(14.2)	0.96(24.4)	0.38(9.7)	1.00(25.4)	0.94(23.8)	
5/8	1/2	-CM-FL10-NS8	1.93(49.0)	0.75(19.1)	0.96(24.4)	0.47(11.9)	1.00(25.4)	0.94(23.8)	
5/8	3/4	-CM-FL10-NS12	1.99(50.5)	0.75(19.1)	0.96 (24.4)	0.50(12.7)	1.00(25.4)	1.06(27.0)	
3/4	3/8	-CM-FL12-NS6	1.80(45.7)	0.56(14.2)	0.96(24.4)	0.41(10.4)	1.13(28.6)	1.06(27.0)	
3/4	1/2	-CM-FL12-NS8	1.99(50.5)	0.75(19.1)	0.96(24.4)	0.47(11.9)	1.13(28.6)	1.06(27.0)	
3/4	3/4	-CM-FL12-NS12	1.99(50.5)	0.75(19.1)	0.96(24.4)	0.62(15.7)	1.13(28.6)	1.06(27.0)	
3/4	1	-CM-FL12-NS16	2.25(57.2)	0.94(23.9)	0.96(24.4)	0.62(15.7)	1.13(28.6)	1.37(34.9)	
7/8	1/2	-CM-FL14-NS8	1.99(50.5)	0.75(19.1)	1.02(25.9)	0.47(11.9)	1.25(31.8)	1.19(30.2)	
7/8	3/4	-CM-FL14-NS12	1.99(50.5)	0.75(19.1)	1.02(25.9)	0.62(15.7)	1.25(31.8)	1.19(30.2)	
7/8	1	-CM-FL14-NS16	2.25(57.2)	0.94(23.9)	1.02(25.9)	0.72(18.3)	1.25(31.8)	1.37(34.9)	
1	1/2	-CM-FL16-NS8	2.26(57.4)	0.75(19.1)	1.23(31.2)	0.47(11.9)	1.50(38.1)	1.37(34.9)	
1	3/4	-CM-FL16-NS12	2.26(57.4)	0.75(19.1)	1.23(31.2)	0.62(15.7)	1.50(38.1)	1.37(34.9)	
1	1	-CM-FL16-NS16	2.45(62.2)	0.94(23.9)	1.23(31.2)	0.88(22.4)	1.50(38.1)	1.37(34.9)	
1 1/8	1	-CM-FL18-NS16	2.45(62.2)	0.94(23.9)	1.44(36.7)	0.88(22.4)	1.75(44.5)	1.63(41.3)	
1 1/4	1	-CM-FL20-NS16	3.04(77.2)	0.94(23.9)	1.62(41.1)	0.88(22.4)	1.87(47.6)	1.75(44.5)	
1 1/4	1 1/4	-CM-FL20-NS20	3.04(77.2)	0.94(23.9)	1.62(41.1)	1.09(27.7)	1.87(47.6)	1.75(44.5)	
1 1/2	1 1/2	-CM-FL24-NS24	3.50(88.9)	1.03(26.2)	1.97(50.0)	1.34(34.0)	2.25(57.2)	2.13(54.0)	

Male Connectors

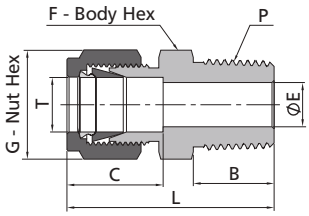

The E dimension refers to the smallest nominal orifice. It might be larger at tapered thread end, straight thread end.

Fractional Tube									ISO Tapered Thread (RT)
T-Tube O.D. (in.)	P-RT Size	Basic Ordering Number	Dimensions, in. (mm)						
			L	B	C	E	G	F	
1/8	1/8	-CM-FL2-RT2	1.20(30.5)	0.38(9.7)	0.50(12.7)	0.09(2.3)	0.44(11.1)	0.44(11.1)	
1/8	1/4	-CM-FL2-RT4	1.40(35.6)	0.56(14.2)	0.50(12.7)	0.09(2.3)	0.44(11.1)	0.56(14.3)	
1/4	1/8	-CM-FL4-RT2	1.29(32.8)	0.38(9.7)	0.60(15.2)	0.19(4.8)	0.56(14.3)	0.50(12.7)	
1/4	1/4	-CM-FL4-RT4	1.49(37.8)	0.56(14.2)	0.60(15.2)	0.19(4.8)	0.56(14.3)	0.56(14.3)	
1/4	3/8	-CM-FL4-RT6	1.51(38.4)	0.56(14.2)	0.60(15.2)	0.19(4.8)	0.56(14.3)	0.69(17.5)	
1/4	1/2	-CM-FL4-RT8	1.76(44.7)	0.75(19.1)	0.60(15.2)	0.19(4.8)	0.56(14.3)	0.87(22.2)	
5/16	1/8	-CM-FL5-RT2	1.34(34.0)	0.38(9.7)	0.64(16.3)	0.19(4.8)	0.63(15.9)	0.56(14.3)	
5/16	1/4	-CM-FL5-RT4	1.52(38.6)	0.56(14.2)	0.64(16.3)	0.25(6.4)	0.63(15.9)	0.56(14.3)	
3/8	1/8	-CM-FL6-RT2	1.39(35.3)	0.38(9.7)	0.66(16.8)	0.19(4.8)	0.69(17.5)	0.63(15.9)	
3/8	1/4	-CM-FL6-RT4	1.57(39.9)	0.56(14.2)	0.66(16.8)	0.28(7.1)	0.69(17.5)	0.63(15.9)	
3/8	3/8	-CM-FL6-RT6	1.57(39.9)	0.56(14.2)	0.66(16.8)	0.28(7.1)	0.69(17.5)	0.69(17.5)	
3/8	1/2	-CM-FL6-RT8	1.82(46.2)	0.75(19.1)	0.66(16.8)	0.28(7.1)	0.69(17.5)	0.87(22.2)	
3/8	3/4	-CM-FL6-RT12	1.88(47.8)	0.75(19.1)	0.66(16.8)	0.28(7.1)	0.69(17.5)	1.06(27.0)	
1/2	1/4	-CM-FL8-RT4	1.71(43.4)	0.56(14.2)	0.90(22.9)	0.28(7.1)	0.87(22.2)	0.81(20.6)	
1/2	3/8	-CM-FL8-RT6	1.71(43.4)	0.56(14.2)	0.90(22.9)	0.38(9.7)	0.87(22.2)	0.81(20.6)	
1/2	1/2	-CM-FL8-RT8	1.93(49.0)	0.75(19.1)	0.90(22.9)	0.41(10.4)	0.87(22.2)	0.87(22.2)	
1/2	3/4	-CM-FL8-RT12	1.99(50.5)	0.75(19.1)	0.90(22.9)	0.41(10.4)	0.87(22.2)	1.06(27.0)	
5/8	1/2	-CM-FL10-RT8	1.93(49.0)	0.75(19.1)	0.96(24.4)	0.47(11.9)	1.00(25.4)	0.94(23.8)	
3/4	3/4	-CM-FL12-RT12	1.99(50.5)	0.75(19.1)	0.96(24.4)	0.62(15.7)	1.13(28.6)	1.06(27.0)	
3/4	1	-CM-FL12-RT16	2.25(57.2)	0.94(23.9)	0.96(24.4)	0.62(15.7)	1.13(28.6)	1.37(34.9)	
1	3/4	-CM-FL16-RT12	2.26(57.4)	0.75(19.1)	1.23(31.2)	0.62(15.7)	1.50(38.1)	1.37(34.9)	
1	1	-CM-FL16-RT16	2.45(62.2)	0.94(23.9)	1.23(31.2)	0.88(22.4)	1.50(38.1)	1.37(34.9)	

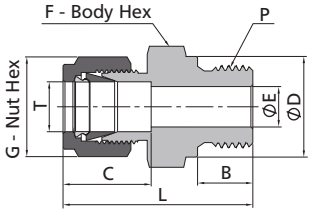

The E dimension refers to the smallest nominal orifice. It might be larger at tapered thread end, straight thread end.

Fractional Tube									ISO Parallel Thread (RS)
T-Tube O.D. (in.)	P-RS Size	Basic Ordering Number	Dimensions, in. (mm)						
			L	B	C	E	G	F	D
1/8	1/8	-CM-FL2-RS2	1.18(30.0)	0.28(7.1)	0.50(12.7)	0.09(2.3)	0.44(11.1)	0.56(14.3)	0.54(13.7)
1/8	1/4	-CM-FL2-RS4	1.39(35.3)	0.44(11.2)	0.50(12.7)	0.09(2.3)	0.44(11.1)	0.75(19.1)	0.71(18.0)
1/8	3/8	-CM-FL2-RS6	1.43(36.3)	0.44(11.2)	0.50(12.7)	0.09(2.3)	0.44(11.1)	0.87(22.2)	0.86(21.8)
1/4	1/8	-CM-FL4-RS2	1.27(32.3)	0.28(7.1)	0.60(15.2)	0.16(4.0)	0.56(14.3)	0.56(14.3)	0.54(13.7)
1/4	1/4	-CM-FL4-RS4	1.48(37.6)	0.44(11.2)	0.60(15.2)	0.19(4.8)	0.56(14.3)	0.75(19.1)	0.71(18.0)
1/4	3/8	-CM-FL4-RS6	1.53(38.9)	0.44(11.2)	0.60(15.2)	0.19(4.8)	0.56(14.3)	0.87(22.2)	0.86(21.8)
1/4	1/2	-CM-FL4-RS8	1.76(44.7)	0.56(14.2)	0.60(15.2)	0.19(4.8)	0.56(14.3)	1.06(27.0)	1.02(25.9)
3/8	1/8	-CM-FL6-RS2	1.49(37.8)	0.28(7.1)	0.66(16.8)	0.16(4.0)	0.69(17.5)	0.63(15.9)	0.54(13.7)
3/8	1/4	-CM-FL6-RS4	1.54(39.1)	0.44(11.2)	0.66(16.8)	0.23(5.9)	0.69(17.5)	0.75(19.1)	0.71(18.0)
3/8	3/8	-CM-FL6-RS6	1.59(40.4)	0.44(11.2)	0.66(16.8)	0.28(7.1)	0.69(17.5)	0.87(22.2)	0.86(21.8)
3/8	1/2	-CM-FL6-RS8	1.82(46.2)	0.56(14.2)	0.66(16.8)	0.28(7.1)	0.69(17.5)	1.06(27.0)	1.02(25.9)
1/2	1/4	-CM-FL8-RS4	1.68(42.7)	0.44(11.2)	0.90(22.9)	0.23(5.9)	0.87(22.2)	0.81(20.6)	0.71(18.0)
1/2	3/8	-CM-FL8-RS6	1.70(43.2)	0.44(11.2)	0.90(22.9)	0.31(7.9)	0.87(22.2)	0.87(22.2)	0.86(21.8)
1/2	1/2	-CM-FL8-RS8	1.93(49.0)	0.56(14.2)	0.90(22.9)	0.41(10.4)	0.87(22.2)	1.06(27.0)	1.02(25.9)
3/4	1/2	-CM-FL12-RS8	1.93(49.0)	0.56(14.2)	0.96(24.4)	0.47(11.9)	1.13(28.6)	1.06(27.0)	1.02(25.9)
3/4	3/4	-CM-FL12-RS12	2.08(52.9)	0.62(15.7)	0.96(24.4)	0.62(15.7)	1.13(28.6)	1.31(33.3)	1.26(32.0)
1	1/2	-CM-FL16-RS8	2.19(55.5)	0.56(14.2)	1.23(31.2)	0.47(11.9)	1.50(38.1)	1.37(34.9)	1.02(25.9)
1	3/4	-CM-FL16-RS12	2.27(57.7)	0.62(15.7)	1.23(31.2)	0.63(16.0)	1.50(38.1)	1.37(34.9)	1.26(32.0)
1	1	-CM-FL16-RS16	2.36(59.9)	0.72(18.3)	1.23(31.2)	0.78(19.8)	1.50(38.1)	1.63(41.3)	1.54(39.1)

Male Connectors

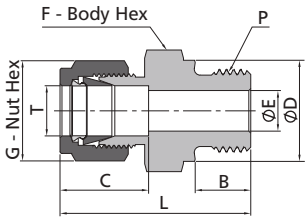

The E dimension refers to the smallest nominal orifice. It might be larger at tapered thread end, straight thread end.

Fractional Tube									ISO Parallel Thread (RP)
T-Tube O.D. (in.)	P-RP Size	Basic Ordering Number	Dimensions, in. (mm)						
			L	B	C	E	G	F	D
1/8	1/8	-CM-FL2-RP2	1.18(30.0)	0.28(7.1)	0.50(12.7)	0.09(2.3)	0.44(11.1)	0.56(14.3)	0.54(13.8)
1/8	1/4	-CM-FL2-RP4	1.39(35.3)	0.44(11.2)	0.50(12.7)	0.09(2.3)	0.44(11.1)	0.75(19.1)	0.70(17.8)
1/4	1/8	-CM-FL4-RP2	1.27(32.3)	0.28(7.1)	0.60(15.2)	0.16(4.1)	0.56(14.3)	0.56(14.3)	0.54(13.8)
1/4	1/4	-CM-FL4-RP4	1.48(37.6)	0.44(11.2)	0.60(15.2)	0.19(4.8)	0.56(14.3)	0.75(19.1)	0.70(17.8)
1/2	3/8	-CM-FL8-RP6	1.79(45.5)	0.44(11.2)	0.90(22.9)	0.31(7.9)	0.87(22.2)	0.87(22.2)	0.86(21.8)
1/2	1/2	-CM-FL8-RP8	1.93(49.0)	0.56(14.2)	0.90(22.9)	0.41(10.4)	0.87(22.2)	1.06(27.0)	1.02(25.9)
3/4	1/2	-CM-FL12-RP8	1.93(49.0)	0.56(14.2)	0.96(24.4)	0.47(11.9)	1.13(28.6)	1.06(27.0)	1.02(25.9)
3/4	3/4	-CM-FL12-RP12	2.08(52.9)	0.62(15.7)	0.96(24.4)	0.62(15.7)	1.13(28.6)	1.31(33.3)	1.26(32.0)
1	1	-CM-FL16-RP16	2.36(59.9)	0.72(18.3)	1.23(31.2)	0.78(19.8)	1.50(38.1)	1.63(41.3)	1.53(38.8)

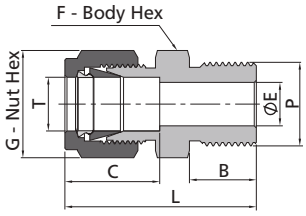

The E dimension refers to the smallest nominal orifice. It might be larger at tapered thread end, straight thread end.

Fractional Tube									ISO Parallel Thread (BP)
T-Tube O.D. (in.)	P-BP Size	Basic Ordering Number	Dimensions, in. (mm)						
			L	B	C	E	G	F	
1/4	3/8	-CM-FL4-BP6	1.51(38.4)	0.56(14.2)	0.60(15.2)	0.19(4.8)	0.56(14.3)	0.69(17.5)	
3/8	3/8	-CM-FL6-BP6	1.57(39.9)	0.56(14.2)	0.66(16.8)	0.28(7.1)	0.69(17.5)	0.69(17.5)	

Male Connectors

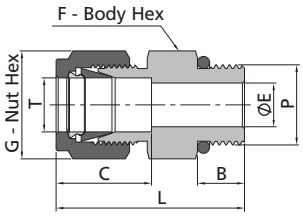

1. The E dimension refers to the smallest nominal orifice. It might be larger at tapered thread end, straight thread end.
2. Adapt to straight thread boss of SAE J1926-1, ISO 11926-1 and MS 16142.

Fractional Tube				SAE/MS Straight Threads (ST)					
T-Tube O.D. (in.)	P-SAE Nominal Size	P-SAE/MS Thread Specification	Basic Ordering Number	Dimensions, in. (mm)					
				L	B	C	E	G	F
1/16	2	5/16-24	-CM-FL1-ST5	0.92(23.4)	0.30(7.6)	0.34(8.6)	0.05(1.3)	0.31(7.9)	0.44(11.1)
1/8	2	5/16-24	-CM-FL2-ST5	1.18(30.0)	0.30(7.6)	0.50(12.7)	0.09(2.3)	0.44(11.1)	0.44(11.1)
1/8	4	7/16-20	-CM-FL2-ST7	1.24(31.5)	0.36(9.1)	0.50(12.7)	0.09(2.3)	0.44(11.1)	0.56(14.3)
1/8	6	9/16-18	-CM-FL2-ST9	1.31(33.3)	0.39(9.9)	0.50(12.7)	0.09(2.3)	0.44(11.1)	0.69(17.5)
3/16	3	3/8-24	-CM-FL3-ST6	1.20(30.5)	0.30(7.6)	0.54(13.7)	0.12(3.0)	0.50(12.7)	0.50(12.7)
1/4	2	5/16-24	-CM-FL4-ST5	1.27(32.3)	0.30(7.6)	0.60(15.2)	0.12(3.0)	0.56(14.3)	0.50(12.7)
1/4	4	7/16-20	-CM-FL4-ST7	1.34(34.0)	0.36(9.1)	0.60(15.2)	0.19(4.8)	0.56(14.3)	0.56(14.3)
1/4	6	9/16-18	-CM-FL4-ST9	1.40(35.6)	0.39(9.9)	0.60(15.2)	0.19(4.8)	0.56(14.3)	0.69(17.5)
1/4	8	3/4-16	-CM-FL4-ST12	1.48(37.6)	0.44(11.2)	0.60(15.2)	0.19(4.8)	0.56(14.3)	0.87(22.2)
1/4	10	7/8-14	-CM-FL4-ST14	1.60(40.6)	0.50(12.7)	0.60(15.2)	0.19(4.8)	0.56(14.3)	1.00(25.4)
5/16	5	1/2-20	-CM-FL5-ST8	1.37(34.8)	0.36(9.1)	0.64(16.3)	0.25(6.4)	0.63(15.9)	0.63(15.9)
3/8	4	7/16-20	-CM-FL6-ST7	1.40(35.6)	0.36(9.1)	0.66(16.8)	0.20(5.1)	0.69(17.5)	0.63(15.9)
3/8	6	9/16-18	-CM-FL6-ST9	1.46(37.1)	0.39(9.9)	0.66(16.8)	0.28(7.1)	0.69(17.5)	0.69(17.5)
3/8	8	3/4-16	-CM-FL6-ST12	1.54(39.1)	0.44(11.2)	0.66(16.8)	0.28(7.1)	0.69(17.5)	0.87(22.2)
3/8	10	7/8-14	-CM-FL6-ST14	1.66(42.2)	0.50(12.7)	0.66(16.8)	0.28(7.1)	0.69(17.5)	1.00(25.4)
1/2	6	9/16-18	-CM-FL8-ST9	1.54(39.1)	0.39(9.9)	0.90(22.9)	0.28(7.1)	0.87(22.2)	0.81(20.6)
1/2	8	3/4-16	-CM-FL8-ST12	1.65(41.9)	0.44(11.2)	0.90(22.9)	0.41(10.4)	0.87(22.2)	0.87(22.2)
1/2	10	7/8-14	-CM-FL8-ST14	1.77(45.0)	0.50(12.7)	0.90(22.9)	0.41(10.4)	0.87(22.2)	1.00(25.4)
1/2	12	1 1/16-12	-CM-FL8-ST17	1.93(49.0)	0.59(15.0)	0.90(22.9)	0.41(10.4)	0.87(22.2)	1.25(31.8)
5/8	8	3/4-16	-CM-FL10-ST12	1.65(41.9)	0.44(11.2)	0.96(24.4)	0.42(10.7)	1.00(25.4)	0.94(23.8)
5/8	10	7/8-14	-CM-FL10-ST14	1.78(45.2)	0.50(12.7)	0.96(24.4)	0.50(12.7)	1.00(25.4)	1.00(25.4)
3/4	8	3/4-16	-CM-FL12-ST12	1.81(46.0)	0.44(11.2)	0.96(24.4)	0.42(10.7)	1.13(28.6)	1.06(27.0)
3/4	12	1 1/16-12	-CM-FL12-ST17	1.93(49.0)	0.59(15.0)	0.96(24.4)	0.62(15.7)	1.13(28.6)	1.25(31.8)
3/4	16	1 5/16-12	-CM-FL12-ST21	1.96(49.8)	0.59(15.0)	0.96(24.4)	0.63(16.0)	1.13(28.6)	1.50(38.1)
7/8	14	1 3/16-12	-CM-FL14-ST19	1.93(49.0)	0.59(15.0)	1.02(25.9)	0.72(18.3)	1.25(31.8)	1.37(34.9)
1	12	1 1/16-12	-CM-FL16-ST17	2.10(53.3)	0.59(15.0)	1.23(31.2)	0.66(16.8)	1.50(38.1)	1.37(34.9)
1	16	1 5/16-12	-CM-FL16-ST21	2.14(54.4)	0.59(15.0)	1.23(31.2)	0.88(22.4)	1.50(38.1)	1.50(38.1)
1 1/4	20	1 5/8-12	-CM-FL20-ST26	2.69(68.3)	0.59(15.0)	1.62(41.1)	1.09(27.7)	1.87(47.6)	1.87(47.6)
1 1/2	24	1 7/8-12	-CM-FL24-ST30	3.06(77.7)	0.59(15.0)	1.97(50.0)	1.34(34.0)	2.25(57.2)	2.13(54.0)

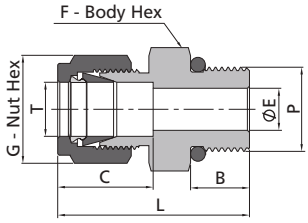

The E dimension refers to the smallest nominal orifice. It might be larger at tapered thread end, straight thread end.

Fractional Tube				SAE/MS Straight Threads (ST)					
T-Tube O.D. (in.)	P-SAE Nominal Size	P-SAE/MS Thread Specification	Basic Ordering Number	Dimensions, in. (mm)					
				L	B	C	E	G	F
1/4	4	7/16-20	-CML-FL4-ST7	2.26(57.4)	0.36(9.1)	0.60(15.2)	0.19(4.8)	0.56(14.3)	0.56(14.3)
1/2	8	3/4-16	-CML-FL8-ST12	3.01(76.5)	0.44(11.2)	0.90(22.9)	0.41(10.4)	0.87(22.2)	0.87(22.2)

Male Connectors

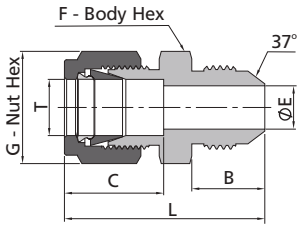

The E dimension refers to the smallest nominal orifice. It might be larger at tapered thread end, straight thread end.

Fractional Tube — **37° Flare (AN)**

T-Tube O.D. (in.)	AN Tube Flare Size	Basic Ordering Number	Dimensions, in. (mm)					
			L	B	C	E	G	F
1/16	1/8	-CM-FL1-AN2	1.07(27.2)	0.45(11.4)	0.34(8.6)	0.05(1.3)	0.31(7.9)	0.44(11.1)
1/8	1/8	-CM-FL2-AN2	1.27(32.3)	0.45(11.4)	0.50(12.7)	0.06(1.5)	0.44(11.1)	0.44(11.1)
1/8	1/4	-CM-FL2-AN4	1.38(35.1)	0.55(14.0)	0.50(12.7)	0.09(2.3)	0.44(11.1)	0.50(12.7)
3/16	3/16	-CM-FL3-AN3	1.32(33.5)	0.48(12.2)	0.54(13.7)	0.12(3.0)	0.50(12.7)	0.44(11.1)
1/4	1/4	-CM-FL4-AN4	1.48(37.6)	0.55(14.0)	0.60(15.2)	0.17(4.3)	0.56(14.3)	0.50(12.7)
5/16	5/16	-CM-FL5-AN5	1.51(38.4)	0.55(14.0)	0.64(16.2)	0.23(5.8)	0.63(15.9)	0.56(14.3)
3/8	1/4	-CM-FL6-AN4	1.56(39.6)	0.55(14.0)	0.66(16.8)	0.17(4.3)	0.69(17.5)	0.63(15.9)
3/8	3/8	-CM-FL6-AN6	1.56(39.6)	0.56(14.1)	0.66(16.8)	0.28(7.1)	0.69(17.5)	0.63(15.9)
1/2	1/2	-CM-FL8-AN8	1.81(46.0)	0.66(16.7)	0.90(22.8)	0.39(9.9)	0.87(22.2)	0.81(20.6)
5/8	5/8	-CM-FL10-AN10	1.93(49.0)	0.76(19.3)	0.96(24.5)	0.48(12.3)	1.00(25.4)	0.94(23.8)
3/4	3/4	-CM-FL12-AN12	2.10(53.3)	0.86(21.9)	0.96(24.4)	0.61(15.5)	1.13(28.6)	1.13(28.6)
1	1	-CM-FL16-AN16	2.42(61.5)	0.91(23.1)	1.23(31.2)	0.84(21.3)	1.50(38.1)	1.37(34.9)

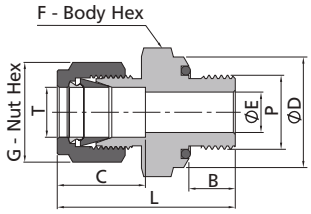

The E dimension refers to the smallest nominal orifice. It might be larger at tapered thread end, straight thread end.

Fractional Tube — **SAE/MS Straight Threads (OST)**

T-Tube O.D. (in.)	P-SAE Nominal Size	P-SAE/MS Thread Specification	Basic Ordering Number	Dimensions, in. (mm)						
				L	B	C	E	G	F	D
1/16	2	5/16-24	-CM-FL1-OST5	1.05(26.7)	0.34(8.6)	0.34(8.6)	0.05(1.3)	0.31(7.9)	0.56(14.3)	0.55(14.0)
1/8	2	5/16-24	-CM-FL2-OST5	1.29(32.8)	0.34(8.6)	0.50(12.7)	0.09(2.3)	0.44(11.1)	0.56(14.3)	0.55(14.0)
3/16	3	3/8-24	-CM-FL3-OST6	1.35(34.3)	0.38(9.7)	0.54(13.7)	0.12(3.0)	0.50(12.7)	0.63(15.9)	0.62(15.7)
1/4	4	7/16-20	-CM-FL4-OST7	1.51(38.4)	0.41(10.4)	0.60(15.2)	0.19(4.8)	0.56(14.3)	0.75(19.1)	0.74(18.8)
5/16	5	1/2-20	-CM-FL5-OST8	1.60(40.6)	0.44(11.2)	0.64(16.3)	0.25(6.4)	0.63(15.9)	0.87(22.2)	0.86(21.8)
3/8	6	9/16-18	-CM-FL6-OST9	1.67(42.4)	0.47(11.9)	0.66(16.8)	0.28(7.1)	0.69(17.5)	0.94(23.8)	0.93(23.6)
1/2	8	3/4-16	-CM-FL8-OST12	1.81(46.0)	0.47(11.9)	0.90(22.9)	0.41(10.4)	0.87(22.2)	1.13(28.6)	1.12(28.4)
3/4	12	1 1/16-12	-CM-FL12-OST17	2.06(52.3)	0.56(14.2)	0.96(24.4)	0.62(15.7)	1.13(28.6)	1.50(38.1)	1.49(37.8)
1	16	1 5/16-12	-CM-FL16-OST21	2.29(58.2)	0.56(14.2)	1.23(31.2)	0.88(22.4)	1.50(38.1)	1.75(44.5)	1.74(44.2)

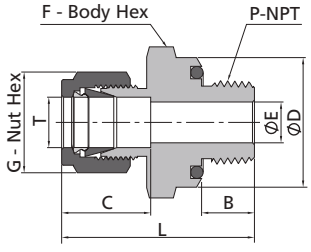

The E dimension refers to the smallest nominal orifice. It might be larger at tapered thread end, straight thread end.

Fractional Tube — **O-Seal with NPT Thread**

T-Tube O.D. (in.)	P-NPT Size	Basic Ordering Number	Dimensions, in. (mm)						
			L	B	C	E	G	F	D
1/8	1/8	-CM-FL2-ONS2	1.29(32.8)	0.28(7.1)	0.34(8.6)	0.09(2.3)	0.47(11.9)	0.75(19.1)	0.74(18.8)
1/4	1/8	-CM-FL4-ONS2	1.38(35.1)	0.28(7.1)	0.60(15.2)	0.19(4.8)	0.56(14.3)	0.75(19.1)	0.74(18.8)
1/4	1/4	-CM-FL4-ONS4	1.51(38.4)	0.38(9.7)	0.60(15.2)	0.19(4.8)	0.56(14.3)	0.94(23.8)	0.93(23.6)
3/8	1/4	-CM-FL6-ONS4	1.57(39.9)	0.38(9.7)	0.66(16.8)	0.28(7.1)	0.69(17.5)	0.94(23.8)	0.93(23.6)
3/8	3/8	-CM-FL6-ONS6	1.63(41.4)	0.41(10.4)	0.66(16.8)	0.28(7.1)	0.69(17.5)	1.13(28.6)	1.12(28.4)
3/8	1/2	-CM-FL6-ONS8	1.85(47.0)	0.53(13.5)	0.66(16.8)	0.28(7.1)	0.69(17.5)	1.31(33.3)	1.30(33.0)
1/2	1/2	-CM-FL8-ONS8	1.96(49.8)	0.53(13.5)	0.90(22.9)	0.41(10.4)	0.87(22.2)	1.31(33.3)	1.30(33.0)

Male Connectors

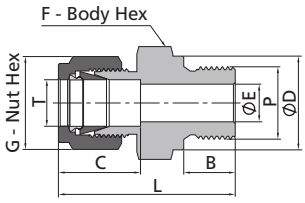

The E dimension refers to the smallest nominal orifice. It might be larger at tapered thread end, straight thread end.

Fractional Tube — Metric Thread (MRS)

T-Tube O.D. (in.)	P-Metric Thread Size	Basic Ordering Number	Dimensions, in. (mm)						
			L	B	C	E	G	F	D
1/8	M14 x 1.5	-CM-FL2-MRS14	1.44(36.7)	0.47(12.0)	0.50(12.7)	0.09(2.3)	0.44(11.1)	0.75(19.1)	0.75(19.0)
1/8	M16 x 1.5	-CM-FL2-MRS16	1.48(37.5)	0.47(12.0)	0.50(12.7)	0.09(2.3)	0.44(11.1)	0.87(22.2)	0.83(21.0)
1/8	M18 x 1.5	-CM-FL2-MRS18	1.52(38.5)	0.47(12.0)	0.50(12.7)	0.09(2.3)	0.44(11.1)	0.94(23.8)	0.91(23.0)
1/8	M20 x 1.5	-CM-FL2-MRS20	1.62(41.1)	0.55(14.0)	0.50(12.7)	0.09(2.3)	0.44(11.1)	1.00(25.4)	0.98(25.0)
1/4	M14 x 1.5	-CM-FL4-MRS14	1.50(38.0)	0.47(12.0)	0.60(15.2)	0.19(4.8)	0.56(14.3)	0.75(19.1)	0.75(19.0)
1/4	M16 x 1.5	-CM-FL4-MRS16	1.57(39.9)	0.47(12.0)	0.60(15.2)	0.19(4.8)	0.56(14.3)	0.87(22.2)	0.83(21.0)
1/4	M18 x 1.5	-CM-FL4-MRS18	1.61(40.8)	0.47(12.0)	0.60(15.2)	0.19(4.8)	0.56(14.3)	0.94(23.8)	0.91(23.0)
1/4	M20 x 1.5	-CM-FL4-MRS20	1.72(43.6)	0.55(14.0)	0.60(15.2)	0.19(4.8)	0.56(14.3)	1.00(25.4)	0.98(25.0)
3/8	M14 x 1.5	-CM-FL6-MRS14	1.63(41.3)	0.47(12.0)	0.66(16.8)	0.28(7.1)	0.69(17.5)	0.75(19.1)	0.75(19.0)
3/8	M16 x 1.5	-CM-FL6-MRS16	1.63(41.3)	0.47(12.0)	0.66(16.8)	0.28(7.1)	0.69(17.5)	0.87(22.2)	0.83(21.0)
3/8	M18 x 1.5	-CM-FL6-MRS18	1.65(41.8)	0.47(12.0)	0.66(16.8)	0.28(7.1)	0.69(17.5)	0.94(23.8)	0.91(23.0)
3/8	M20 x 1.5	-CM-FL6-MRS20	1.78(45.1)	0.55(14.0)	0.66(16.8)	0.28(7.1)	0.69(17.5)	1.00(25.4)	0.98(25.0)
1/2	M16 x 1.5	-CM-FL8-MRS16	1.73(44.0)	0.47(12.0)	0.90(22.8)	0.35(9.0)	0.87(22.2)	0.87(22.2)	0.83(21.0)
1/2	M18 x 1.5	-CM-FL8-MRS18	1.73(44.0)	0.47(12.0)	0.90(22.9)	0.39(10.0)	0.87(22.2)	0.94(23.8)	0.91(23.0)
1/2	M20 x 1.5	-CM-FL8-MRS20	1.89(47.9)	0.55(14.0)	0.90(22.9)	0.41(10.4)	0.87(22.2)	1.00(25.4)	0.98(25.0)
1/2	M22 x 1.5	-CM-FL8-MRS22	1.91(48.5)	0.55(14.0)	0.90(22.9)	0.41(10.4)	0.87(22.2)	1.06(27.0)	1.06(27.0)

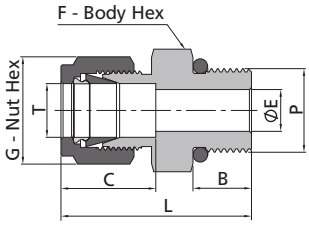

1. The E dimension refers to the smallest nominal orifice. It might be larger at tapered thread end, straight thread end.
2. Adapt to straight thread boss of ISO 6149-1.

Fractional Tube — Metric Thread (MST)

T-Tube O.D. (in.)	P-Metric Thread Size	Basic Ordering Number	Dimensions, in. (mm)					
			L	B	C	E	G	F
1/4	M14X1.5	-CM-FL4-MST14	1.39(35.2)	0.43(11.0)	0.60(15.2)	0.19(4.8)	0.56(14.3)	0.75(19.1)
3/8	M14X1.5	-CM-FL6-MST14	1.44(36.7)	0.43(11.0)	0.66(16.8)	0.28(7.1)	0.69(17.5)	0.75(19.1)
3/8	M20X1.5	-CM-FL6-MST20	1.62(41.2)	0.55(14.0)	0.66(16.8)	0.28(7.1)	0.69(17.5)	1.06(27.0)
1/2	M14X1.5	-CM-FL8-MST14	1.58(40.2)	0.43(11.0)	0.90(22.9)	0.30(7.5)	0.87(22.2)	0.81(20.6)
1/2	M20X1.5	-CM-FL8-MST20	1.73(44.0)	0.55(14.0)	0.90(22.9)	0.41(10.4)	0.87(22.2)	1.06(27.0)

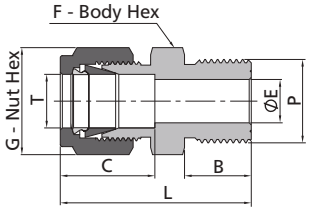

The E dimension refers to the smallest nominal orifice. It might be larger at tapered thread end, straight thread end.

Fractional Tube — Metric Thread (MS)

T-Tube O.D. (in.)	P-Metric Thread Size	Basic Ordering Number	Dimensions, in. (mm)					
			L	B	C	E	G	F
1/16	M5 x 0.8	-CM-FL1-MS5	0.86(21.8)	0.31(8.0)	0.34(8.6)	0.05(1.3)	0.31(7.9)	0.31(7.9)
1/8	M14 x 1.5	-CM-FL2-MS14	1.37(34.8)	0.51(13.0)	0.50(12.7)	0.09(2.3)	0.44(11.1)	0.63(15.9)
1/8	M16 x 1.5	-CM-FL2-MS16	1.41(35.8)	0.55(14.0)	0.50(12.7)	0.09(2.3)	0.44(11.1)	0.69(17.5)
1/8	M18 x 1.5	-CM-FL2-MS18	1.46(37.2)	0.59(15.0)	0.50(12.7)	0.09(2.3)	0.44(11.1)	0.75(19.1)
1/8	M20 x 1.5	-CM-FL2-MS20	1.50(38.1)	0.63(16.0)	0.50(12.7)	0.09(2.3)	0.44(11.1)	0.87(22.2)
1/4	M14 x 1.5	-CM-FL4-MS14	1.45(36.9)	0.51(13.0)	0.60(15.2)	0.19(4.8)	0.56(14.3)	0.63(15.9)
1/4	M16 x 1.5	-CM-FL4-MS16	1.50(38.1)	0.55(14.0)	0.60(15.2)	0.19(4.8)	0.56(14.3)	0.69(17.5)
1/4	M18 x 1.5	-CM-FL4-MS18	1.56(39.5)	0.59(15.0)	0.60(15.2)	0.19(4.8)	0.56(14.3)	0.75(19.1)
1/4	M20 x 1.5	-CM-FL4-MS20	1.60(40.7)	0.63(16.0)	0.60(15.2)	0.19(4.8)	0.56(14.3)	0.87(22.2)
3/8	M10 x 1.0	-CM-FL6-MS10	1.43(36.4)	0.43(11.0)	0.66(16.8)	0.19(4.8)	0.69(17.5)	0.63(15.9)
3/8	M14 x 1.5	-CM-FL6-MS14	1.55(39.3)	0.51(13.0)	0.66(16.8)	0.28(7.1)	0.69(17.5)	0.63(15.9)
3/8	M16 x 1.5	-CM-FL6-MS16	1.56(39.7)	0.55(14.0)	0.66(16.8)	0.28(7.1)	0.69(17.5)	0.69(17.5)
3/8	M18 x 1.5	-CM-FL6-MS18	1.63(41.5)	0.59(15.0)	0.66(16.8)	0.28(7.1)	0.69(17.5)	0.75(19.1)
3/8	M20 x 1.5	-CM-FL6-MS20	1.67(42.3)	0.63(16.0)	0.66(16.8)	0.28(7.1)	0.69(17.5)	0.87(22.2)
1/2	M16 x 1.5	-CM-FL8-MS16	1.70(43.2)	0.55(14.0)	0.90(22.9)	0.33(8.4)	0.87(22.2)	0.81(20.6)
1/2	M18 x 1.5	-CM-FL8-MS18	1.72(43.7)	0.59(15.0)	0.90(22.9)	0.38(9.6)	0.87(22.2)	0.81(20.6)
1/2	M20 x 1.5	-CM-FL8-MS20	1.77(44.9)	0.63(16.0)	0.90(22.9)	0.41(10.4)	0.87(22.2)	0.87(22.2)
1/2	M22 x 1.5	-CM-FL8-MS22	1.85(47.0)	0.67(17.0)	0.90(22.9)	0.41(10.4)	0.87(22.2)	0.94(23.8)

Male Connectors

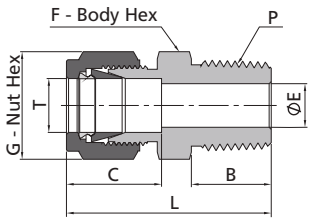

The E dimension refers to the smallest nominal orifice. It might be larger at tapered thread end, straight thread end.

Metric Tube			NPT Thread					
T-Tube O.D. (mm)	P-NPT Size	Basic Ordering Number	Dimensions, mm (in.)					
			L	B	C	E	G	F
2	1/8	-CM-ML2-NS2	30.5(1.20)	9.7(0.38)	12.9(0.51)	1.7(0.07)	12.0(0.47)	12.0(0.47)
3	1/8	-CM-ML3-NS2	30.5(1.20)	9.7(0.38)	12.9(0.51)	2.4(0.09)	12.0(0.47)	12.0(0.47)
3	1/4	-CM-ML3-NS4	35.6(1.40)	14.2(0.56)	12.9(0.51)	2.4(0.09)	12.0(0.47)	14.0(0.55)
4	1/8	-CM-ML4-NS2	31.2(1.23)	9.7(0.38)	13.7(0.54)	2.4(0.09)	12.0(0.47)	12.0(0.47)
4	1/4	-CM-ML4-NS4	36.3(1.43)	14.2(0.56)	13.7(0.54)	2.4(0.09)	12.0(0.47)	14.0(0.55)
6	1/8	-CM-ML6-NS2	32.8(1.29)	9.7(0.38)	15.3(0.60)	4.8(0.19)	14.0(0.55)	14.0(0.55)
6	1/4	-CM-ML6-NS4	37.9(1.49)	14.2(0.56)	15.3(0.60)	4.8(0.19)	14.0(0.55)	14.0(0.55)
6	3/8	-CM-ML6-NS6	38.4(1.51)	14.2(0.56)	15.3(0.60)	4.8(0.19)	14.0(0.55)	18.0(0.71)
6	1/2	-CM-ML6-NS8	44.7(1.76)	19.1(0.75)	15.3(0.60)	4.8(0.19)	14.0(0.55)	22.0(0.87)
8	1/8	-CM-ML8-NS2	34.2(1.35)	9.7(0.38)	16.2(0.64)	4.8(0.19)	16.0(0.63)	15.0(0.59)
8	1/4	-CM-ML8-NS4	38.7(1.52)	14.2(0.56)	16.2(0.64)	6.4(0.25)	16.0(0.63)	15.0(0.59)
8	3/8	-CM-ML8-NS6	39.3(1.55)	14.2(0.56)	16.2(0.64)	6.4(0.25)	16.0(0.63)	18.0(0.71)
8	1/2	-CM-ML8-NS8	45.6(1.80)	19.1(0.75)	16.2(0.64)	6.4(0.25)	16.0(0.63)	22.0(0.87)
10	1/8	-CM-ML10-NS2	36.3(1.43)	9.7(0.38)	17.2(0.68)	4.8(0.19)	19.0(0.75)	18.0(0.71)
10	1/4	-CM-ML10-NS4	40.9(1.61)	14.2(0.56)	17.2(0.68)	7.1(0.28)	19.0(0.75)	18.0(0.71)
10	3/8	-CM-ML10-NS6	40.9(1.61)	14.2(0.56)	17.2(0.68)	7.9(0.31)	19.0(0.75)	18.0(0.71)
10	1/2	-CM-ML10-NS8	45.8(1.80)	19.1(0.75)	17.2(0.68)	7.9(0.31)	19.0(0.75)	22.0(0.87)
10	3/4	-CM-ML10-NS12	48.0(1.89)	19.1(0.75)	17.2(0.68)	7.9(0.31)	19.0(0.75)	27.0(1.06)
10	1	-CM-ML10-NS16	54.6(2.15)	23.9(0.94)	17.2(0.68)	7.9(0.31)	19.0(0.75)	35.0(1.38)
12	1/8	-CM-ML12-NS2	38.8(1.53)	9.7(0.38)	22.8(0.90)	4.8(0.19)	22.0(0.87)	22.0(0.87)
12	1/4	-CM-ML12-NS4	43.4(1.71)	14.2(0.56)	22.8(0.90)	7.1(0.28)	22.0(0.87)	22.0(0.87)
12	3/8	-CM-ML12-NS6	43.4(1.71)	14.2(0.56)	22.8(0.90)	9.5(0.37)	22.0(0.87)	22.0(0.87)
12	1/2	-CM-ML12-NS8	49.0(1.93)	19.1(0.75)	22.8(0.90)	9.5(0.37)	22.0(0.87)	22.0(0.87)
12	3/4	-CM-ML12-NS12	49.1(1.93)	19.1(0.75)	22.8(0.90)	9.5(0.37)	22.0(0.87)	27.0(1.06)
14	1/8	-CM-ML14-NS2	39.9(1.57)	9.7(0.38)	24.4(0.96)	4.8(0.19)	25.0(0.98)	24.0(0.94)
14	1/4	-CM-ML14-NS4	44.1(1.74)	14.2(0.56)	24.4(0.96)	7.1(0.28)	25.0(0.98)	24.0(0.94)
14	3/8	-CM-ML14-NS6	44.1(1.74)	14.2(0.56)	24.4(0.96)	9.5(0.37)	25.0(0.98)	24.0(0.94)
14	1/2	-CM-ML14-NS8	49.0(1.93)	19.1(0.75)	24.4(0.96)	11.1(0.44)	25.0(0.98)	24.0(0.94)
14	3/4	-CM-ML14-NS12	49.1(1.93)	19.1(0.75)	24.4(0.96)	11.1(0.44)	25.0(0.98)	27.0(1.06)
15	1/2	-CM-ML15-NS8	49.0(1.93)	19.1(0.75)	24.4(0.96)	11.9(0.47)	25.0(0.98)	24.0(0.94)
15	3/4	-CM-ML15-NS12	50.5(1.99)	19.1(0.75)	24.4(0.96)	11.9(0.47)	25.0(0.98)	27.0(1.06)
15	1	-CM-ML15-NS16	57.1(2.25)	23.9(0.94)	24.4(0.96)	11.9(0.47)	25.0(0.98)	35.0(1.38)
16	1/4	-CM-ML16-NS4	44.1(1.74)	14.2(0.56)	24.4(0.96)	7.1(0.28)	25.0(0.98)	24.0(0.94)
16	3/8	-CM-ML16-NS6	44.1(1.74)	14.2(0.56)	24.4(0.96)	9.5(0.37)	25.0(0.98)	24.0(0.94)
16	1/2	-CM-ML16-NS8	49.0(1.93)	19.1(0.75)	24.4(0.96)	11.9(0.47)	25.0(0.98)	24.0(0.94)
16	3/4	-CM-ML16-NS12	50.5(1.99)	19.1(0.75)	24.4(0.96)	12.7(0.5)	25.0(0.98)	27.0(1.06)
18	3/8	-CM-ML18-NS6	45.6(1.80)	14.2(0.56)	24.4(0.96)	9.5(0.37)	30.0(1.18)	27.0(1.06)
18	1/2	-CM-ML18-NS8	50.5(1.99)	19.1(0.75)	24.4(0.96)	11.9(0.47)	30.0(1.18)	27.0(1.06)
18	3/4	-CM-ML18-NS12	50.5(1.99)	19.1(0.75)	24.4(0.96)	15.1(0.59)	30.0(1.18)	27.0(1.06)
20	1/2	-CM-ML20-NS8	52.3(2.06)	19.1(0.75)	26.0(1.02)	11.9(0.47)	32.0(1.26)	30.0(1.18)
20	3/4	-CM-ML20-NS12	52.3(2.06)	19.1(0.75)	26.0(1.02)	15.9(0.63)	32.0(1.26)	30.0(1.18)
20	1	-CM-ML20-NS16	57.1(2.25)	23.9(0.94)	26.0(1.02)	15.9(0.63)	32.0(1.26)	35.0(1.38)
22	1/2	-CM-ML22-NS8	52.3(2.06)	19.1(0.75)	26.0(1.02)	11.9(0.47)	32.0(1.26)	30.0(1.18)
22	3/4	-CM-ML22-NS12	52.3(2.06)	19.1(0.75)	26.0(1.02)	15.9(0.63)	32.0(1.26)	30.0(1.18)
22	1	-CM-ML22-NS16	57.1(2.25)	23.9(0.94)	26.0(1.02)	18.3(0.72)	32.0(1.26)	35.0(1.38)
25	1/2	-CM-ML25-NS8	57.5(2.26)	19.1(0.75)	31.3(1.23)	11.9(0.47)	38.0(1.50)	35.0(1.38)
25	3/4	-CM-ML25-NS12	57.5(2.26)	19.1(0.75)	31.3(1.23)	15.9(0.63)	38.0(1.50)	35.0(1.38)
25	1	-CM-ML25-NS16	62.3(2.45)	23.9(0.94)	31.3(1.23)	21.8(0.86)	38.0(1.50)	35.0(1.38)
28	1	-CM-ML28-NS16	72.4(2.85)	23.9(0.94)	36.6(1.44)	21.8(0.86)	46.0(1.81)	41.0(1.61)
28	1 1/4	-CM-ML28-NS20	73.1(2.88)	23.9(0.94)	36.6(1.44)	21.8(0.86)	46.0(1.81)	46.0(1.81)
30	1 1/4	-CM-ML30-NS20	77.2(3.04)	23.9(0.94)	39.6(1.56)	26.2(1.03)	50.0(1.97)	46.0(1.81)
32	1 1/4	-CM-ML32-NS20	79.6(3.13)	23.9(0.94)	42.0(1.65)	28.6(1.13)	50.0(1.97)	46.0(1.81)
38	1 1/2	-CM-ML38-NS24	91.6(3.61)	26.2(1.03)	49.4(1.94)	33.7(1.33)	60.0(2.36)	55.0(2.17)

Male Connectors

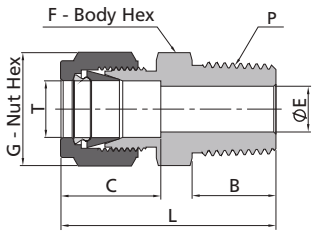

The E dimension refers to the smallest nominal orifice. It might be larger at tapered thread end, straight thread end.

Metric Tube			ISO Tapered Thread (RT)					
T-Tube O.D. (mm)	P-RT Size	Basic Ordering Number	Dimensions, mm (in.)					
			L	B	C	E	G	F
2	1/8	-CM-ML2-RT2	30.5(1.20)	9.7(0.38)	12.9(0.51)	1.7(0.07)	12.0(0.47)	12.0(0.47)
3	1/8	-CM-ML3-RT2	30.5(1.20)	9.7(0.38)	12.9(0.51)	2.4(0.09)	12.0(0.47)	12.0(0.47)
3	1/4	-CM-ML3-RT4	35.6(1.40)	14.2(0.56)	12.9(0.51)	2.4(0.09)	12.0(0.47)	14.0(0.55)
4	1/8	-CM-ML4-RT2	31.2(1.23)	9.7(0.38)	13.7(0.54)	2.4(0.09)	12.0(0.47)	12.0(0.47)
4	1/4	-CM-ML4-RT4	36.3(1.43)	14.2(0.56)	13.7(0.54)	2.4(0.09)	12.0(0.47)	14.0(0.55)
6	1/8	-CM-ML6-RT2	32.8(1.29)	9.7(0.38)	15.3(0.60)	4.8(0.19)	14.0(0.55)	14.0(0.55)
6	1/4	-CM-ML6-RT4	37.9(1.49)	14.2(0.56)	15.3(0.60)	4.8(0.19)	14.0(0.55)	14.0(0.55)
6	3/8	-CM-ML6-RT6	38.4(1.51)	14.2(0.56)	15.3(0.60)	4.8(0.19)	14.0(0.55)	18.0(0.71)
6	1/2	-CM-ML6-RT8	44.7(1.76)	19.1(0.75)	15.3(0.60)	4.8(0.19)	14.0(0.55)	22.0(0.87)
8	1/8	-CM-ML8-RT2	34.2(1.35)	9.7(0.38)	16.2(0.64)	4.8(0.19)	16.0(0.63)	15.0(0.59)
8	1/4	-CM-ML8-RT4	38.7(1.52)	14.2(0.56)	16.2(0.64)	6.4(0.25)	16.0(0.63)	15.0(0.59)
8	3/8	-CM-ML8-RT6	39.2(1.54)	14.2(0.56)	16.2(0.64)	6.4(0.25)	16.0(0.63)	18.0(0.71)
8	1/2	-CM-ML8-RT8	45.6(1.80)	19.1(0.75)	16.2(0.64)	6.4(0.25)	16.0(0.63)	22.0(0.87)
10	1/8	-CM-ML10-RT2	36.3(1.43)	9.7(0.38)	17.2(0.68)	4.8(0.19)	19.0(0.75)	18.0(0.71)
10	1/4	-CM-ML10-RT4	40.9(1.61)	14.2(0.56)	17.2(0.68)	7.1(0.28)	19.0(0.75)	18.0(0.71)
10	3/8	-CM-ML10-RT6	40.9(1.61)	14.2(0.56)	17.2(0.68)	7.9(0.31)	19.0(0.75)	18.0(0.71)
10	1/2	-CM-ML10-RT8	46.5(1.83)	19.1(0.75)	17.2(0.68)	7.9(0.31)	19.0(0.75)	22.0(0.87)
10	3/4	-CM-ML10-RT12	48.0(1.89)	19.1(0.75)	17.2(0.68)	7.9(0.31)	19.0(0.75)	27.0(1.06)
12	1/8	-CM-ML12-RT2	38.9(1.53)	9.7(0.38)	22.8(0.90)	4.8(0.19)	22.0(0.87)	22.0(0.87)
12	1/4	-CM-ML12-RT4	43.4(1.71)	14.2(0.56)	22.8(0.90)	7.1(0.28)	22.0(0.87)	22.0(0.87)
12	3/8	-CM-ML12-RT6	43.4(1.71)	14.2(0.56)	22.8(0.90)	9.5(0.37)	22.0(0.87)	22.0(0.87)
12	1/2	-CM-ML12-RT8	49.0(1.93)	19.1(0.75)	22.8(0.90)	9.5(0.37)	22.0(0.87)	22.0(0.87)
12	3/4	-CM-ML12-RT12	50.5(1.99)	19.1(0.75)	22.8(0.90)	9.5(0.37)	22.0(0.87)	27.0(1.06)
14	1/8	-CM-ML14-RT2	39.9(1.57)	9.7(0.38)	24.4(0.96)	4.8(0.19)	25.0(0.98)	24.0(0.94)
14	1/4	-CM-ML14-RT4	44.1(1.74)	14.2(0.56)	24.4(0.96)	7.1(0.28)	25.0(0.98)	24.0(0.94)
14	3/8	-CM-ML14-RT6	44.1(1.74)	14.2(0.56)	24.4(0.96)	9.5(0.37)	25.0(0.98)	24.0(0.94)
14	1/2	-CM-ML14-RT8	49.0(1.93)	19.1(0.75)	24.4(0.96)	11.1(0.44)	25.0(0.98)	24.0(0.94)
14	3/4	-CM-ML14-RT12	50.5(1.99)	19.1(0.75)	24.4(0.96)	11.1(0.44)	25.0(0.98)	27.0(1.06)
15	1/2	-CM-ML15-RT8	49.0(1.93)	19.1(0.75)	24.4(0.96)	11.9(0.47)	25.0(0.98)	24.0(0.94)
16	1/4	-CM-ML16-RT4	44.1(1.74)	14.2(0.56)	24.4(0.96)	7.1(0.28)	25.0(0.98)	24.0(0.94)
16	3/8	-CM-ML16-RT6	44.1(1.74)	14.2(0.56)	24.4(0.96)	9.5(0.37)	25.0(0.98)	24.0(0.94)
16	1/2	-CM-ML16-RT8	49.0(1.93)	19.1(0.75)	24.4(0.96)	11.9(0.47)	25.0(0.98)	24.0(0.94)
16	3/4	-CM-ML16-RT12	50.5(1.99)	19.1(0.75)	24.4(0.96)	12.7(0.5)	25.0(0.98)	27.0(1.06)
18	1/2	-CM-ML18-RT8	50.5(1.99)	19.1(0.75)	24.4(0.96)	11.9(0.47)	30.0(1.18)	27.0(1.06)
18	3/4	-CM-ML18-RT12	50.5(1.99)	19.1(0.75)	24.4(0.96)	15.1(0.59)	30.0(1.18)	27.0(1.06)
20	1/2	-CM-ML20-RT8	52.3(2.06)	19.1(0.75)	26.0(1.02)	11.9(0.47)	32.0(1.26)	30.0(1.18)
20	3/4	-CM-ML20-RT12	52.3(2.06)	19.1(0.75)	26.0(1.02)	15.9(0.63)	32.0(1.26)	30.0(1.18)
22	3/4	-CM-ML22-RT12	52.3(2.06)	19.1(0.75)	26.0(1.02)	15.9(0.63)	32.0(1.26)	30.0(1.18)
22	1	-CM-ML22-RT16	57.1(2.25)	23.9(0.94)	26.0(1.02)	18.3(0.72)	32.0(1.26)	35.0(1.38)
25	1/2	-CM-ML25-RT8	57.5(2.26)	19.1(0.75)	31.3(1.23)	11.9(0.47)	38.0(1.50)	35.0(1.38)
25	3/4	-CM-ML25-RT12	57.5(2.26)	19.1(0.75)	31.3(1.23)	15.9(0.63)	38.0(1.50)	35.0(1.38)
25	1	-CM-ML25-RT16	62.3(2.45)	23.9(0.94)	31.3(1.23)	21.8(0.86)	38.0(1.50)	35.0(1.38)
28	1	-CM-ML28-RT16	72.4(2.85)	23.9(0.94)	36.6(1.44)	21.8(0.86)	46.0(1.81)	41.0(1.61)
28	1 1/4	-CM-ML28-RT20	73.1(2.88)	23.9(0.94)	36.6(1.44)	21.8(0.86)	46.0(1.81)	46.0(1.81)
30	1 1/4	-CM-ML30-RT20	77.2(3.04)	23.9(0.94)	39.6(1.56)	26.2(1.03)	50.0(1.97)	46.0(1.81)
32	1 1/4	-CM-ML32-RT20	79.6(3.13)	23.9(0.94)	42.0(1.65)	28.6(1.13)	50.0(1.97)	46.0(1.81)
38	1 1/2	-CM-ML38-RT24	91.6(3.61)	26.2(1.03)	49.4(1.94)	33.7(1.33)	60.0(2.36)	55.0(2.17)

Male Connectors

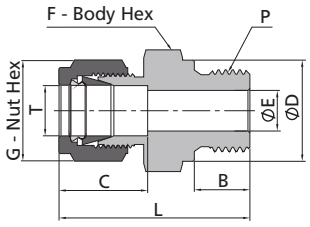

The E dimension refers to the smallest nominal orifice. It might be larger at tapered thread end, straight thread end.

Metric Tube			ISO Parallel Thread (RS)						
T-Tube O.D. (mm)	P-RS Size	Basic Ordering Number	Dimensions, mm (in.)						
			L	B	C	E	G	F	D
2	1/8	-CM-ML2-RS2	30.0(1.18)	7.1(0.28)	12.9(0.51)	1.7(0.07)	12.0(0.47)	14.0(0.55)	13.7(0.54)
3	1/8	-CM-ML3-RS2	30.0(1.18)	7.1(0.28)	12.9(0.51)	2.4(0.09)	12.0(0.47)	14.0(0.55)	13.7(0.54)
3	1/4	-CM-ML3-RS4	35.3(1.39)	11.2(0.44)	12.9(0.51)	2.4(0.09)	12.0(0.47)	19.0(0.75)	18.0(0.71)
4	1/8	-CM-ML4-RS2	30.7(1.21)	7.1(0.28)	13.7(0.54)	2.4(0.09)	12.0(0.47)	14.0(0.55)	13.7(0.54)
4	1/4	-CM-ML4-RS4	36.0(1.42)	11.2(0.44)	13.7(0.54)	2.4(0.09)	12.0(0.47)	19.0(0.75)	18.0(0.71)
6	1/8	-CM-ML6-RS2	32.3(1.27)	7.1(0.28)	15.3(0.60)	4.0(0.16)	14.0(0.55)	14.0(0.55)	13.7(0.54)
6	1/4	-CM-ML6-RS4	37.6(1.48)	11.2(0.44)	15.3(0.60)	4.8(0.19)	14.0(0.55)	19.0(0.75)	18.0(0.71)
6	3/8	-CM-ML6-RS6	38.9(1.53)	11.2(0.44)	15.3(0.60)	4.8(0.19)	14.0(0.55)	22.0(0.87)	21.6(0.85)
6	1/2	-CM-ML6-RS8	44.7(1.76)	14.2(0.56)	15.3(0.60)	4.8(0.19)	14.0(0.55)	27.0(1.06)	25.9(1.02)
8	1/8	-CM-ML8-RS2	33.2(1.31)	7.1(0.28)	16.2(0.64)	4.0(0.16)	16.0(0.63)	15.0(0.59)	13.7(0.54)
8	1/4	-CM-ML8-RS4	38.5(1.52)	11.2(0.44)	16.2(0.64)	6.4(0.25)	16.0(0.63)	19.0(0.75)	18.0(0.71)
8	3/8	-CM-ML8-RS6	39.8(1.57)	11.2(0.44)	16.2(0.64)	6.4(0.25)	16.0(0.63)	22.0(0.87)	21.6(0.85)
8	1/2	-CM-ML8-RS8	45.6(1.80)	14.2(0.56)	16.2(0.64)	6.4(0.25)	16.0(0.63)	27.0(1.06)	25.9(1.02)
8	3/4	-CM-ML8-RS12	49.5(1.95)	15.7(0.62)	16.2(0.64)	6.4(0.25)	16.0(0.63)	35.0(1.38)	32.0(1.26)
10	1/4	-CM-ML10-RS4	39.4(1.55)	11.2(0.44)	17.2(0.68)	5.9(0.23)	19.0(0.75)	19.0(0.75)	18.0(0.71)
10	3/8	-CM-ML10-RS6	40.6(1.60)	11.2(0.44)	17.2(0.68)	7.9(0.31)	19.0(0.75)	22.0(0.87)	21.6(0.85)
10	1/2	-CM-ML10-RS8	46.5(1.83)	14.2(0.56)	17.2(0.68)	7.9(0.31)	19.0(0.75)	27.0(1.06)	25.9(1.02)
12	1/4	-CM-ML12-RS4	42.6(1.68)	11.2(0.44)	22.8(0.90)	5.9(0.23)	22.0(0.87)	22.0(0.87)	18.0(0.71)
12	3/8	-CM-ML12-RS6	43.1(1.70)	11.2(0.44)	22.8(0.90)	7.9(0.31)	22.0(0.87)	22.0(0.87)	21.6(0.85)
12	1/2	-CM-ML12-RS8	49.0(1.93)	14.2(0.56)	22.8(0.90)	9.5(0.37)	22.0(0.87)	27.0(1.06)	25.9(1.02)
12	3/4	-CM-ML12-RS12	52.8(2.08)	15.7(0.62)	22.8(0.90)	9.5(0.37)	22.0(0.87)	35.0(1.38)	32.0(1.26)
14	1/4	-CM-ML14-RS4	44.2(1.74)	11.2(0.44)	24.4(0.96)	6.4(0.25)	25.0(0.98)	24.0(0.94)	18.0(0.71)
14	3/8	-CM-ML14-RS6	43.9(1.73)	11.2(0.44)	24.4(0.96)	7.9(0.31)	25.0(0.98)	24.0(0.94)	21.6(0.85)
14	1/2	-CM-ML14-RS8	49.0(1.93)	14.2(0.56)	24.4(0.96)	11.1(0.44)	25.0(0.98)	27.0(1.06)	25.9(1.02)
14	3/4	-CM-ML14-RS12	52.8(2.08)	15.7(0.62)	24.4(0.96)	11.1(0.44)	25.0(0.98)	35.0(1.38)	32.0(1.26)
15	3/8	-CM-ML15-RS6	43.9(1.73)	11.2(0.44)	24.4(0.96)	7.9(0.31)	25.0(0.98)	24.0(0.94)	21.6(0.85)
15	1/2	-CM-ML15-RS8	49.0(1.93)	14.2(0.56)	24.4(0.96)	11.9(0.47)	25.0(0.98)	27.0(1.06)	25.9(1.02)
15	3/4	-CM-ML15-RS12	52.8(2.08)	15.7(0.62)	24.4(0.96)	11.9(0.47)	25.0(0.98)	35.0(1.38)	32.0(1.26)
16	3/8	-CM-ML16-RS6	43.9(1.73)	11.2(0.44)	24.4(0.96)	7.9(0.31)	25.0(0.98)	24.0(0.94)	21.6(0.85)
16	1/2	-CM-ML16-RS8	49.0(1.93)	14.2(0.56)	24.4(0.96)	11.9(0.47)	25.0(0.98)	27.0(1.06)	25.9(1.02)
16	3/4	-CM-ML16-RS12	52.8(2.08)	15.7(0.62)	24.4(0.96)	12.7(0.5)	25.0(0.98)	35.0(1.38)	32.0(1.26)
18	1/2	-CM-ML18-RS8	49.0(1.93)	14.2(0.56)	24.4(0.96)	11.9(0.47)	30.0(1.18)	27.0(1.06)	25.9(1.02)
18	3/4	-CM-ML18-RS12	52.8(2.08)	15.7(0.62)	24.4(0.96)	15.1(0.59)	30.0(1.18)	35.0(1.38)	32.0(1.26)
20	1/2	-CM-ML20-RS8	50.5(1.99)	14.2(0.56)	26.0(1.02)	11.9(0.47)	32.0(1.26)	30.0(1.18)	25.9(1.02)
20	3/4	-CM-ML20-RS12	52.8(2.08)	15.7(0.62)	26.0(1.02)	15.9(0.63)	32.0(1.26)	35.0(1.38)	32.0(1.26)
22	3/4	-CM-ML22-RS12	52.8(2.08)	15.7(0.62)	26.0(1.02)	15.9(0.63)	32.0(1.26)	35.0(1.38)	32.0(1.26)
22	1	-CM-ML22-RS16	55.3(2.18)	18.3(0.72)	26.0(1.02)	18.3(0.72)	32.0(1.26)	41.0(1.61)	39.1(1.54)
25	3/4	-CM-ML25-RS12	57.5(2.26)	15.7(0.62)	31.3(1.23)	15.9(0.63)	38.0(1.50)	35.0(1.38)	32.0(1.26)
25	1	-CM-ML25-RS16	60.1(2.37)	18.3(0.72)	31.3(1.23)	19.8(0.78)	38.0(1.50)	41.0(1.61)	39.1(1.54)
28	1	-CM-ML28-RS16	70.1(2.76)	18.3(0.72)	36.6(1.44)	19.8(0.78)	46.0(1.81)	41.0(1.61)	39.1(1.54)
28	1 1/4	-CM-ML28-RS20	73.9(2.91)	19.8(0.78)	36.6(1.44)	21.8(0.86)	46.0(1.81)	50.0(1.97)	49.0(1.93)
30	1 1/4	-CM-ML30-RS20	79.2(312)	19.8(0.78)	39.6(1.56)	26.2(1.03)	50.0(1.97)	50.0(1.97)	49.0(1.93)
32	1 1/4	-CM-ML32-RS20	78.9(3.11)	19.8(0.78)	42.0(1.65)	28.6(1.13)	50.0(1.97)	50.0(1.97)	49.0(1.93)
38	1 1/2	-CM-ML38-RS24	90.8(3.57)	20.6(0.81)	49.4(1.94)	31.8(1.25)	60.0(2.36)	55.0(2.17)	54.7(2.15)

Male Connectors

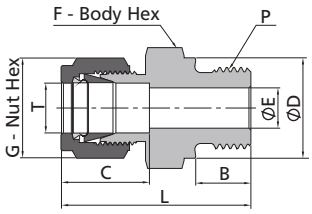

The E dimension refers to the smallest nominal orifice. It might be larger at tapered thread end, straight thread end.

Metric Tube			ISO Parallel Thread (RP)						
T-Tube O.D. (mm)	P-RP Size	Basic Ordering Number	Dimensions, mm (in.)						
			L	B	C	E	G	F	D
3	1/8	-CM-ML3-RP2	30.0(1.18)	7.1(0.28)	12.9(0.51)	2.4(0.09)	12.0(0.47)	14.0(0.55)	13.8(0.54)
3	1/4	-CM-ML3-RP4	35.3(1.39)	11.2(0.44)	12.9(0.51)	2.4(0.09)	12.0(0.47)	19.0(0.75)	18.0(0.71)
4	1/8	-CM-ML4-RP2	30.7(1.21)	7.1(0.28)	13.7(0.54)	2.4(0.09)	12.0(0.47)	14.0(0.55)	13.8(0.54)
6	1/8	-CM-ML6-RP2	32.3(1.27)	7.1(0.28)	15.3(0.60)	4.0(0.16)	14.0(0.55)	14.0(0.55)	13.8(0.54)
6	1/4	-CM-ML6-RP4	37.6(1.48)	11.2(0.44)	15.3(0.60)	4.8(0.19)	14.0(0.55)	19.0(0.75)	18.0(0.71)
6	3/8	-CM-ML6-RP6	38.9(1.53)	11.2(0.44)	15.3(0.60)	4.8(0.19)	14.0(0.55)	22.0(0.87)	21.8(0.86)
6	1/2	-CM-ML6-RP8	44.7(1.76)	14.2(0.56)	15.3(0.60)	4.8(0.19)	14.0(0.55)	27.0(1.06)	26.0(1.02)
8	1/8	-CM-ML8-RP2	33.3(1.31)	7.1(0.28)	16.2(0.64)	4.0(0.16)	16.0(0.63)	15.0(0.59)	13.8(0.54)
8	1/4	-CM-ML8-RP4	38.5(1.52)	11.2(0.44)	16.2(0.64)	5.9(0.23)	16.0(0.63)	19.0(0.75)	18.0(0.71)
8	3/8	-CM-ML8-RP6	39.8(1.57)	11.2(0.44)	16.2(0.64)	6.4(0.25)	16.0(0.63)	22.0(0.87)	21.8(0.86)
8	1/2	-CM-ML8-RP8	45.6(1.80)	14.2(0.56)	16.2(0.64)	6.4(0.25)	16.0(0.63)	27.0(1.06)	26.0(1.02)
10	1/4	-CM-ML10-RP4	39.4(1.55)	11.2(0.44)	17.2(0.68)	5.9(0.23)	19.0(0.75)	19.0(0.75)	18.0(0.71)
10	3/8	-CM-ML10-RP6	42.8(1.69)	11.2(0.44)	17.2(0.68)	7.9(0.31)	19.0(0.75)	22.0(0.87)	21.8(0.86)
10	1/2	-CM-ML10-RP8	46.5(1.83)	14.2(0.56)	17.2(0.68)	7.9(0.31)	19.0(0.75)	27.0(1.06)	26.0(1.02)
12	1/4	-CM-ML12-RP4	42.6(1.68)	11.2(0.44)	22.8(0.90)	5.9(0.23)	22.0(0.87)	22.0(0.87)	18.0(0.71)
12	3/8	-CM-ML12-RP6	43.1(1.70)	11.2(0.44)	22.8(0.90)	7.9(0.31)	22.0(0.87)	22.0(0.87)	21.8(0.86)
12	1/2	-CM-ML12-RP8	52.1(2.05)	14.2(0.56)	22.8(0.90)	9.5(0.37)	22.0(0.87)	27.0(1.06)	26.0(1.02)
12	3/4	-CM-ML12-RP12	52.8(2.08)	15.7(0.62)	22.8(0.90)	9.5(0.37)	22.0(0.87)	35.0(1.38)	32.0(1.26)
15	1/2	-CM-ML15-RP8	47.5(1.87)	14.2(0.56)	24.4(0.96)	11.9(0.47)	25.0(0.98)	27.0(1.06)	26.0(1.02)
16	3/8	-CM-ML16-RP6	43.9(1.73)	11.2(0.44)	24.4(0.96)	7.9(0.31)	25.0(0.98)	24.0(0.94)	21.8(0.86)
16	1/2	-CM-ML16-RP8	49.0(1.93)	14.2(0.56)	24.4(0.96)	11.9(0.47)	25.0(0.98)	27.0(1.06)	26.0(1.02)
18	1/2	-CM-ML18-RP8	49.0(1.93)	14.2(0.56)	24.4(0.96)	11.9(0.47)	30.0(1.18)	27.0(1.06)	26.0(1.02)
18	3/4	-CM-ML18-RP12	52.8(2.08)	15.7(0.62)	24.4(0.96)	15.1(0.59)	30.0(1.18)	35.0(1.38)	32.0(1.26)
20	1/2	-CM-ML20-RP8	50.5(1.99)	14.2(0.56)	26.0(1.02)	11.9(0.47)	32.0(1.26)	30.0(1.18)	26.0(1.02)
20	3/4	-CM-ML20-RP12	52.8(2.08)	15.7(0.62)	26.0(1.02)	15.9(0.63)	32.0(1.26)	35.0(1.38)	32.0(1.26)
22	3/4	-CM-ML22-RP12	52.8(2.08)	15.7(0.62)	26.0(1.02)	15.9(0.63)	32.0(1.26)	35.0(1.38)	32.0(1.26)
22	1	-CM-ML22-RP16	55.3(2.18)	18.3(0.72)	26.0(1.02)	18.3(0.72)	32.0(1.26)	41.0(1.61)	39.0(1.54)
25	3/4	-CM-ML25-RP12	57.5(2.26)	15.7(0.62)	31.3(1.23)	15.9(0.63)	38.0(1.50)	35.0(1.38)	32.0(1.26)
25	1	-CM-ML25-RP16	60.1(2.37)	18.3(0.72)	31.3(1.23)	19.8(0.78)	38.0(1.50)	41.0(1.61)	39.0(1.54)
28	1	-CM-ML28-RP16	70.1(2.76)	18.3(0.72)	36.6(1.44)	19.8(0.78)	46.0(1.81)	41.0(1.61)	39.0(1.54)
28	1 1/4	-CM-ML28-RP20	73.9(2.91)	19.8(0.78)	36.6(1.44)	21.8(0.86)	46.0(1.81)	50.0(1.97)	49.0(1.93)
30	1 1/4	-CM-ML30-RP20	76.5(3.01)	19.8(0.78)	39.6(1.56)	26.2(1.03)	50.0(1.97)	50.0(1.97)	49.0(1.93)
32	1 1/4	-CM-ML32-RP20	78.9(3.11)	19.8(0.78)	42.0(1.65)	28.6(1.13)	50.0(1.97)	50.0(1.97)	49.0(1.93)
38	1 1/2	-CM-ML38-RP24	89.3(3.52)	20.6(0.81)	49.4(1.94)	31.8(1.25)	60.0(2.36)	55.0(2.17)	54.7(2.15)

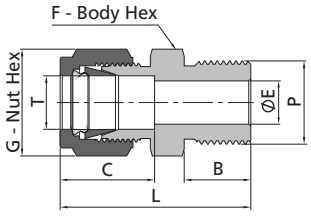

The E dimension refers to the smallest nominal orifice. It might be larger at tapered thread end, straight thread end.

Metric Tube			ISO Parallel Thread (BP)					
T-Tube O.D. (mm)	P-BP Size	Basic Ordering Number	Dimensions, mm (in.)					
			L	B	C	E	G	F
6	1/4	-CM-ML6-BP4	36.9(1.45)	12.9(0.51)	15.3(0.60)	4.8(0.19)	14.0(0.55)	14.0(0.55)
6	3/8	-CM-ML6-BP6	39.5(1.56)	14.2(0.56)	15.3(0.60)	4.8(0.19)	14.0(0.55)	18.0(0.71)
8	1/8	-CM-ML8-BP2	33.9(1.33)	9.8(0.39)	16.2(0.64)	4.0(0.16)	16.0(0.63)	14.0(0.55)
8	1/4	-CM-ML8-BP4	37.0(1.46)	12.9(0.51)	16.2(0.64)	6.4(0.25)	16.0(0.63)	14.0(0.55)
8	3/8	-CM-ML8-BP6	39.3(1.55)	14.2(0.56)	16.2(0.64)	6.4(0.25)	16.0(0.63)	18.0(0.71)
8	1/2	-CM-ML8-BP8	45.4(1.79)	18.8(0.74)	16.2(0.64)	6.4(0.25)	16.0(0.63)	22.0(0.87)
10	1/4	-CM-ML10-BP4	39.5(1.56)	12.9(0.51)	17.2(0.68)	5.9(0.23)	19.0(0.75)	18.0(0.71)
10	1/2	-CM-ML10-BP8	46.3(1.82)	18.8(0.74)	17.2(0.68)	7.9(0.31)	19.0(0.75)	22.0(0.87)
12	3/8	-CM-ML12-BP6	44.2(1.74)	14.2(0.56)	22.8(0.90)	7.9(0.31)	22.0(0.87)	22.0(0.87)
12	1/2	-CM-ML12-BP8	52.1(2.05)	18.8(0.74)	22.8(0.90)	9.5(0.37)	22.0(0.87)	22.0(0.87)
14	1/4	-CM-ML14-BP4	42.9(1.69)	12.9(0.51)	24.4(0.96)	5.9(0.23)	25.0(0.98)	24.0(0.94)
16	3/8	-CM-ML16-BP6	43.4(1.71)	14.2(0.56)	24.4(0.96)	7.9(0.31)	25.0(0.98)	24.0(0.94)
16	1/2	-CM-ML16-BP8	47.9(1.89)	18.8(0.74)	24.4(0.96)	9.5(0.37)	25.0(0.98)	24.0(0.94)
18	1/2	-CM-ML18-BP8	49.8(1.96)	18.8(0.74)	24.4(0.96)	9.5(0.37)	30.0(1.18)	27.0(1.06)

Male Connectors

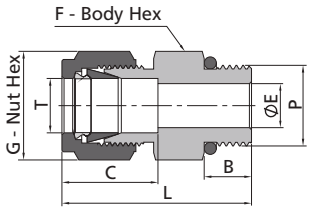

1. The E dimension refers to the smallest nominal orifice. It might be larger at tapered thread end, straight thread end.
2. Adapt to straight thread boss of SAE J1926-1, ISO 11926-1 and MS 16142.

Metric Tube — **SAE/MS Straight Threads (ST)**

T-Tube O.D. (mm)	P-SAE Nominal Size	P-SAE/MS Thread Specification	Basic Ordering Number	Dimensions, mm (in.) L	B	C	E	G	F
6	6	9/16-18	-CM-ML6-ST9	35.6(1.40)	9.9(0.39)	15.3(0.60)	4.8(0.19)	14.0(0.55)	18.0(0.71)
10	6	9/16-18	-CM-ML10-ST9	37.3(1.47)	9.9(0.39)	17.2(0.68)	7.1(0.28)	19.0(0.75)	18.0(0.71)
10	8	3/4-16	-CM-ML10-ST12	39.4(1.55)	11.2(0.44)	17.2(0.68)	7.9(0.31)	19.0(0.75)	22.0(0.87)
12	4	7/16-20	-CM-ML12-ST7	40.6(1.60)	9.1(0.36)	22.8(0.90)	5.2(0.20)	22.0(0.87)	22.0(0.87)
12	6	9/16-18	-CM-ML12-ST9	39.9(1.57)	9.9(0.39)	22.8(0.90)	7.1(0.28)	22.0(0.87)	22.0(0.87)

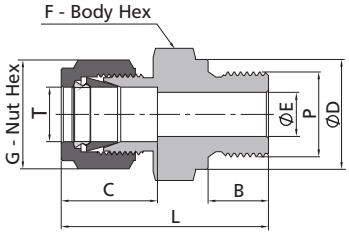

The E dimension refers to the smallest nominal orifice. It might be larger at tapered thread end, straight thread end.

Metric Tube — **Metric Thread (MRS)**

T-Tube O.D. (mm)	P-Metric Thread Size	Basic Ordering Number	Dimensions, mm (in.) L	B	C	E	G	F	D
6	M8 x 1	-CM-ML6-MRS8	33.3(1.31)	8.0(0.31)	15.3(0.60)	3.0(0.12)	14.0(0.55)	14.0(0.55)	12.0(0.47)
6	M10 x 1	-CM-ML6-MRS10	33.3(1.31)	8.0(0.31)	15.3(0.60)	4.0(0.16)	14.0(0.55)	14.0(0.55)	14.0(0.55)
6	M12 x 1.5	-CM-ML6-MRS12	38.2(1.50)	12.0(0.47)	15.3(0.60)	4.8(0.19)	14.0(0.55)	18.0(0.71)	17.0(0.67)
6	M14 x 1.5	-CM-ML6-MRS14	39.7(1.56)	12.0(0.47)	15.3(0.60)	4.8(0.19)	14.0(0.55)	22.0(0.87)	19.0(0.75)
8	M8 x 1	-CM-ML8-MRS8	34.1(1.34)	8.0(0.31)	16.2(0.64)	3.0(0.12)	16.0(0.63)	14.0(0.55)	12.0(0.47)
8	M10 x 1	-CM-ML8-MRS10	34.1(1.34)	8.0(0.31)	16.2(0.64)	5.0(0.20)	16.0(0.63)	14.0(0.55)	14.0(0.55)
8	M12 x 1.5	-CM-ML8-MRS12	40.4(1.59)	12.0(0.47)	16.2(0.64)	6.0(0.24)	16.0(0.63)	18.0(0.71)	17.0(0.67)
8	M14 x 1.5	-CM-ML8-MRS14	40.4(1.59)	12.0(0.47)	16.2(0.64)	6.4(0.25)	16.0(0.63)	19.0(0.75)	19.0(0.75)
10	M12 x 1.5	-CM-ML10-MRS12	40.7(1.60)	12.0(0.47)	17.2(0.68)	6.0(0.24)	19.0(0.75)	18.0(0.71)	17.0(0.67)
10	M14 x 1.5	-CM-ML10-MRS14	39.5(1.56)	12.0(0.47)	17.2(0.68)	7.9(0.31)	19.0(0.75)	19.0(0.75)	19.0(0.75)
12	M16 x 1.5	-CM-ML12-MRS16	45.5(1.79)	12.0(0.47)	22.8(0.90)	9.0(0.35)	22.0(0.87)	22.0(0.87)	21.0(0.83)
12	M20 x 1.5	-CM-ML12-MRS20	47.2(1.86)	14.0(0.55)	22.8(0.90)	9.5(0.37)	22.0(0.87)	25.0(0.98)	25.0(0.98)
12	M22 x 1.5	-CM-ML12-MRS22	47.5(1.87)	14.0(0.55)	22.8(0.90)	9.5(0.37)	22.0(0.87)	27.0(1.06)	27.0(1.06)
14	M14 x 1.5	-CM-ML14-MRS14	44.9(1.77)	12.0(0.47)	24.4(0.96)	8.0(0.31)	25.0(0.98)	24.0(0.94)	19.0(0.75)
14	M20 x 1.5	-CM-ML14-MRS20	48.0(1.89)	14.0(0.55)	24.4(0.96)	11.1(0.44)	25.0(0.98)	27.0(1.06)	25.0(0.98)
16	M20 x 1.5	-CM-ML16-MRS20	48.0(1.89)	14.0(0.55)	24.4(0.96)	12.0(0.47)	25.0(0.98)	25.0(0.98)	25.0(0.98)
18	M20 x 1.5	-CM-ML18-MRS20	48.5(1.91)	14.0(0.55)	24.4(0.96)	12.0(0.47)	30.0(1.18)	27.0(1.06)	25.0(0.98)
20	M20 x 1.5	-CM-ML20-MRS20	50.0(1.97)	14.0(0.55)	26.0(1.02)	12.0(0.47)	32.0(1.26)	30.0(1.18)	25.0(0.98)
22	M24 x 1.5	-CM-ML22-MRS24	50.5(1.99)	14.0(0.55)	26.0(1.02)	15.0(0.59)	32.0(1.26)	30.0(1.18)	28.8(1.13)
25	M27 x 2	-CM-ML25-MRS27	57.5(2.26)	16.0(0.63)	31.3(1.23)	16.8(0.66)	38.0(1.50)	35.0(1.38)	32.0(1.26)

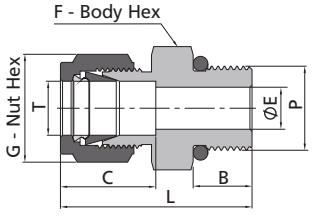

1. The E dimension refers to the smallest nominal orifice. It might be larger at tapered thread end, straight thread end.
2. Adapt to straight thread boss of ISO 6149-1.

Metric Tube — **Metric Thread (MST)**

T-Tube O.D. (mm)	P-Metric Thread Size	Basic Ordering Number	Dimensions, mm (in.) L	B	C	E	G	F
6	M14 x 1.5	-CM-ML6-MST14	38.7(1.52)	11.0(0.43)	15.3(0.60)	4.8(0.19)	14.0(0.55)	19.0(0.75)
10	M14 x 1.5	-CM-ML10-MST14	40.0(1.57)	11.0(0.43)	17.2(0.68)	7.5(0.30)	19.0(0.75)	19.0(0.75)
10	M20 x 1.5	-CM-ML10-MST20	47.2(1.86)	14.0(0.55)	17.2(0.68)	7.9(0.31)	19.0(0.75)	27.0(1.06)
12	M14 x 1.5	-CM-ML12-MST14	40.2(1.58)	11.0(0.43)	22.8(0.90)	7.5(0.30)	22.0(0.87)	22.0(0.87)
12	M20 x 1.5	-CM-ML12-MST20	47.2(1.86)	14.0(0.55)	22.8(0.90)	9.5(0.37)	22.0(0.87)	27.0(1.06)

Male Connectors

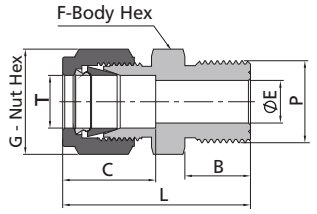

The E dimension refers to the smallest nominal orifice. It might be larger at tapered thread end, straight thread end.

Metric Tube									Metric Thread (MS)
T-Tube O.D. (mm)	P-Metric Thread Size	Basic Ordering Number	Dimensions, mm (in.)						
			L	B	C	E	G	F	
6	M6 x 1	-CM-ML6-MS6	32.4(1.28)	8.0(0.31)	15.3(0.60)	2.0(0.08)	14.0(0.55)	14.0(0.55)	
6	M8 x 1	-CM-ML6-MS8	35.3(1.39)	9.0(0.35)	15.3(0.60)	3.0(0.12)	14.0(0.55)	14.0(0.55)	
6	M10 x 1	-CM-ML6-MS10	34.7(1.37)	11.0(0.43)	15.3(0.60)	4.7(0.19)	14.0(0.55)	14.0(0.55)	
6	M12 x 1.5	-CM-ML6-MS12	36.4(1.43)	12.0(0.47)	15.3(0.60)	4.8(0.19)	14.0(0.55)	14.0(0.55)	
6	M14 x 1.5	-CM-ML6-MS14	36.5(1.44)	13.0(0.51)	15.3(0.60)	4.8(0.19)	14.0(0.55)	16.0(0.63)	
6	M16 x 1.5	-CM-ML6-MS16	38.4(1.51)	14.0(0.55)	15.3(0.60)	4.8(0.19)	14.0(0.55)	18.0(0.71)	
6	M18 x 1.5	-CM-ML6-MS18	40.0(1.57)	15.0(0.59)	15.3(0.60)	4.8(0.19)	14.0(0.55)	19.0(0.75)	
6	M20 x 1.5	-CM-ML6-MS20	41.7(1.64)	16.0(0.63)	15.3(0.60)	4.8(0.19)	14.0(0.55)	22.0(0.87)	
8	M8 x 1	-CM-ML8-MS8	34.5(1.36)	9.0(0.35)	16.2(0.64)	3.0(0.12)	16.0(0.63)	14.0(0.55)	
8	M10 x 1	-CM-ML8-MS10	36.6(1.44)	11.0(0.43)	16.2(0.64)	4.7(0.19)	16.0(0.63)	14.0(0.55)	
8	M12 x 1.5	-CM-ML8-MS12	36.6(1.44)	12.0(0.47)	16.2(0.64)	6.0(0.24)	16.0(0.63)	14.0(0.55)	
8	M14 x 1.5	-CM-ML8-MS14	37.7(1.48)	13.0(0.51)	16.2(0.64)	6.4(0.25)	16.0(0.63)	16.0(0.63)	
8	M20 x 1.5	-CM-ML8-MS20	42.5(1.67)	16.0(0.63)	16.2(0.64)	6.4(0.25)	16.0(0.63)	22.0(0.87)	
10	M12 x 1.5	-CM-ML10-MS12	38.7(1.52)	12.0(0.47)	17.2(0.68)	6.0(0.24)	19.0(0.75)	18.0(0.71)	
10	M14 x 1.5	-CM-ML10-MS14	39.7(1.56)	13.0(0.51)	17.2(0.68)	7.2(0.28)	19.0(0.75)	18.0(0.71)	
10	M20 x 1.5	-CM-ML10-MS20	43.5(1.71)	16.0(0.63)	17.2(0.68)	7.9(0.31)	19.0(0.75)	22.0(0.87)	
12	M12 x 1.5	-CM-ML12-MS12	41.2(1.62)	12.0(0.47)	22.8(0.90)	6.0(0.24)	22.0(0.87)	22.0(0.87)	
12	M16 x 1.5	-CM-ML12-MS16	43.2(1.70)	14.0(0.55)	22.8(0.90)	8.4(0.33)	22.0(0.87)	22.0(0.87)	
12	M18 x 1.5	-CM-ML12-MS18	44.2(1.74)	15.0(0.59)	22.8(0.90)	9.5(0.37)	22.0(0.87)	22.0(0.87)	
12	M20 x 1.5	-CM-ML12-MS20	45.2(1.78)	16.0(0.63)	22.8(0.90)	9.5(0.37)	22.0(0.87)	22.0(0.87)	
14	M14 x 1.5	-CM-ML14-MS14	42.5(1.67)	13.0(0.51)	24.4(0.96)	7.2(0.28)	25.0(0.98)	24.0(0.94)	
14	M16 x 1.5	-CM-ML14-MS16	43.9(1.73)	14.0(0.55)	24.4(0.96)	8.4(0.33)	25.0(0.98)	24.0(0.94)	
14	M20 x 1.5	-CM-ML14-MS20	45.1(1.78)	16.0(0.63)	24.4(0.96)	10.8(0.43)	25.0(0.98)	24.0(0.94)	
16	M20 x 1.5	-CM-ML16-MS20	46.1(1.81)	16.0(0.63)	24.4(0.96)	10.8(0.43)	25.0(0.98)	24.0(0.94)	
18	M20 x 1.5	-CM-ML18-MS20	47.5(1.87)	16.0(0.63)	24.4(0.96)	10.8(0.43)	30.0(1.18)	27.0(1.06)	
18	M22 x 1.5	-CM-ML18-MS22	48.5(1.91)	17.0(0.67)	24.4(0.96)	12.0(0.47)	30.0(1.18)	27.0(1.06)	
20	M20 x 1.5	-CM-ML20-MS20	49.5(1.95)	16.0(0.63)	26.0(1.02)	10.8(0.43)	32.0(1.26)	30.0(1.18)	
22	M24 x 1.5	-CM-ML22-MS24	50.5(1.99)	17.0(0.67)	26.0(1.02)	14.4(0.57)	32.0(1.26)	30.0(1.18)	
25	M27 x 2	-CM-ML25-MS27	57.0(2.24)	18.0(0.71)	31.3(1.23)	16.1(0.63)	38.0(1.50)	35.0(1.38)	

Bulkhead Male Connectors

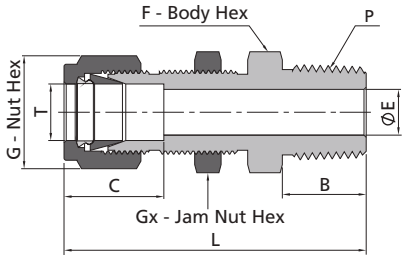

The E dimension refers to the smallest nominal orifice. It might be larger at tapered thread end, straight thread end.

Fractional Tube											NPT Thread
T-Tube O.D. (in.)	P-NPT Size	Basic Ordering Number	Dimensions, in. (mm)							Panel Hole Size in. (mm)	Max. Panel Thickness in. (mm)
			L	B	C	E	G	F	Gx		
1/16	1/16	-BCM-FL1-NS1	1.19(30.2)	0.38(9.7)	0.34(8.6)	0.05(1.3)	0.31(7.9)	0.31(7.9)	0.31(7.9)	0.20(5.2)	0.25(6.4)
1/16	1/8	-BCM-FL1-NS2	1.27(32.3)	0.38(9.7)	0.34(8.6)	0.05(1.3)	0.31(7.9)	0.44(11.1)	0.31(7.9)	0.20(5.2)	0.25(6.4)
1/8	1/8	-BCM-FL2-NS2	1.83(46.5)	0.38(9.7)	0.50(12.7)	0.09(2.3)	0.44(11.1)	0.50(12.7)	0.50(12.7)	0.33(8.3)	0.50(12.7)
3/16	1/8	-BCM-FL3-NS2	1.89(48.0)	0.38(9.7)	0.54(13.7)	0.12(3.0)	0.50(12.7)	0.56(14.3)	0.56(14.3)	0.39(9.9)	0.50(12.7)
1/4	1/8	-BCM-FL4-NS2	1.95(49.5)	0.38(9.7)	0.60(15.2)	0.19(4.8)	0.56(14.3)	0.63(15.9)	0.63(15.9)	0.45(11.5)	0.40(10.2)
1/4	1/4	-BCM-FL4-NS4	2.13(54.1)	0.56(14.2)	0.60(15.2)	0.19(4.8)	0.56(14.3)	0.63(15.9)	0.63(15.9)	0.45(11.5)	0.40(10.2)
1/4	3/8	-BCM-FL4-NS6	2.16(54.9)	0.56(14.2)	0.60(15.2)	0.19(4.8)	0.63(15.9)	0.69(17.5)	0.63(15.9)	0.45(11.5)	0.40(10.2)
1/4	1/2	-BCM-FL4-NS8	2.37(60.3)	0.75(19.1)	0.60(15.2)	0.19(4.8)	0.56(14.3)	0.87(22.2)	0.63(15.9)	0.45(11.5)	0.40(10.2)
5/16	1/8	-BCM-FL5-NS2	2.08(52.8)	0.38(9.7)	0.64(16.3)	0.19(4.8)	0.63(15.9)	0.69(17.5)	0.69(17.5)	0.52(13.1)	0.44(11.2)
5/16	1/4	-BCM-FL5-NS4	2.27(57.7)	0.56(14.2)	0.64(16.3)	0.25(6.4)	0.63(15.9)	0.69(17.5)	0.69(17.5)	0.52(13.1)	0.44(11.2)
3/8	1/8	-BCM-FL6-NS2	2.08(52.9)	0.38(9.7)	0.66(16.8)	0.19(4.8)	0.69(17.5)	0.75(19.1)	0.75(19.1)	0.58(14.7)	0.44(11.2)
3/8	1/4	-BCM-FL6-NS4	2.26(57.4)	0.56(14.2)	0.66(16.8)	0.28(7.1)	0.69(17.5)	0.75(19.1)	0.75(19.1)	0.58(14.7)	0.44(11.2)
3/8	3/8	-BCM-FL6-NS6	2.26(57.4)	0.56(14.2)	0.66(16.8)	0.28(7.1)	0.69(17.5)	0.75(19.1)	0.75(19.1)	0.58(14.7)	0.44(11.2)
3/8	1/2	-BCM-FL6-NS8	2.51(63.8)	0.75(19.1)	0.66(16.8)	0.28(7.1)	0.69(17.5)	0.87(22.2)	0.87(22.2)	0.58(14.7)	0.44(11.2)
1/2	1/8	-BCM-FL8-NS2	2.31(58.7)	0.38(9.7)	0.90(22.9)	0.19(4.8)	0.87(22.2)	0.94(23.8)	0.94(23.8)	0.76(19.4)	0.50(12.7)
1/2	1/4	-BCM-FL8-NS4	2.49(63.2)	0.56(14.2)	0.90(22.9)	0.28(7.1)	0.87(22.2)	0.94(23.8)	0.94(23.8)	0.76(19.4)	0.50(12.7)
1/2	3/8	-BCM-FL8-NS6	2.49(63.2)	0.56(14.2)	0.90(22.9)	0.38(9.7)	0.87(22.2)	0.94(23.8)	0.87(22.2)	0.76(19.4)	0.50(12.7)
1/2	1/2	-BCM-FL8-NS8	2.71(68.8)	0.75(19.1)	0.90(22.9)	0.41(10.4)	0.87(22.2)	0.94(23.8)	0.94(23.8)	0.76(19.4)	0.50(12.7)
5/8	3/8	-BCM-FL10-NS6	2.63(66.7)	0.56(14.2)	0.96(24.4)	0.38(9.7)	1.00(25.4)	1.06(27.0)	1.06(27.0)	0.89(22.6)	0.59(15.1)
5/8	1/2	-BCM-FL10-NS8	2.81(71.5)	0.75(19.1)	0.96(24.4)	0.47(11.9)	1.00(25.4)	1.06(27.0)	1.06(27.0)	0.89(22.6)	0.59(15.1)
3/4	1/2	-BCM-FL12-NS8	3.00(76.2)	0.75(19.1)	0.96(24.4)	0.47(11.9)	1.13(28.6)	1.19(30.2)	1.19(30.2)	1.02(25.8)	0.66(16.8)
3/4	3/4	-BCM-FL12-NS12	3.00(76.2)	0.75(19.1)	0.96(24.4)	0.62(15.7)	1.13(28.6)	1.19(30.2)	1.19(30.2)	1.02(25.8)	0.66(16.8)
7/8	3/4	-BCM-FL14-NS12	3.31(84.1)	0.75(19.1)	1.02(25.9)	0.62(15.7)	1.25(31.8)	1.31(33.3)	1.31(33.3)	1.14(29.0)	0.75(19.1)
1	3/4	-BCM-FL16-NS12	3.48(88.4)	0.75(19.1)	1.23(31.2)	0.62(15.7)	1.50(38.1)	1.63(41.3)	1.63(41.3)	1.33(33.7)	0.75(19.1)
1	1	-BCM-FL16-NS16	3.67(93.2)	0.94(23.9)	1.23(31.2)	0.88(22.4)	1.50(38.1)	1.63(41.3)	1.63(41.3)	1.33(33.7)	0.75(19.1)

Metric Tube											NPT Thread
T-Tube O.D. (mm)	P-NPT Size	Basic Ordering Number	Dimensions, mm (in.)							Panel Hole Size mm (in.)	Max. Panel Thickness mm (in.)
			L	B	C	E	G	F	Gx		
6	1/8	-BCM-ML6-NS2	49.6(1.95)	9.7(0.38)	15.3(0.60)	4.8(0.19)	14.0(0.55)	16.0(0.63)	16.0(0.63)	11.5(0.45)	10.2(0.40)
6	1/4	-BCM-ML6-NS4	53.6(2.11)	14.2(0.56)	15.3(0.60)	4.8(0.19)	14.0(0.55)	16.0(0.63)	16.0(0.63)	11.5(0.45)	10.2(0.40)
8	1/8	-BCM-ML8-NS2	52.3(2.06)	9.7(0.38)	16.2(0.64)	4.8(0.19)	16.0(0.63)	18.0(0.71)	18.0(0.71)	13.1(0.52)	11.2(0.44)
8	1/4	-BCM-ML8-NS4	56.6(2.23)	14.2(0.56)	16.2(0.64)	6.4(0.25)	16.0(0.63)	18.0(0.71)	18.0(0.71)	13.1(0.52)	11.2(0.44)
10	1/4	-BCM-ML10-NS4	58.4(2.30)	14.2(0.56)	17.2(0.68)	7.1(0.28)	19.0(0.75)	22.0(0.87)	22.0(0.87)	16.3(0.64)	11.2(0.44)
10	3/8	-BCM-ML10-NS6	58.4(2.30)	14.2(0.56)	17.2(0.68)	7.9(0.31)	19.0(0.75)	22.0(0.87)	22.0(0.87)	16.3(0.64)	11.2(0.44)
10	1/2	-BCM-ML10-NS8	63.1(2.48)	19.1(0.75)	17.2(0.68)	7.9(0.31)	19.0(0.75)	22.0(0.87)	22.0(0.87)	16.3(0.64)	11.2(0.44)
12	1/4	-BCM-ML12-NS4	63.9(2.52)	14.2(0.56)	22.8(0.90)	7.1(0.28)	22.0(0.87)	24.0(0.94)	24.0(0.94)	19.5(0.77)	12.7(0.50)
12	3/8	-BCM-ML12-NS6	63.9(2.52)	14.2(0.56)	22.8(0.90)	9.5(0.37)	22.0(0.87)	24.0(0.94)	24.0(0.94)	19.5(0.77)	12.7(0.50)
12	1/2	-BCM-ML12-NS8	68.8(2.71)	19.1(0.75)	22.8(0.90)	9.5(0.37)	22.0(0.87)	24.0(0.94)	24.0(0.94)	19.5(0.77)	12.7(0.50)

Bulkhead Male Connectors

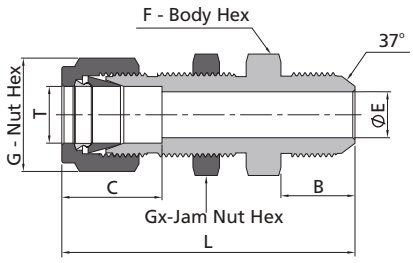

The E dimension refers to the smallest nominal orifice. It might be larger at tapered thread end, straight thread end.

Fractional Tube											37° Flare (AN)
T-Tube O.D. (in.)	AN Tube Flare Size	Basic Ordering Number	Dimensions, in. (mm)							Panel Hole Size in. (mm)	Max. Panel Thickness in. (mm)
			L	B	C	E	G	F	Gx		
1/8	1/8	-BCM-FL2-AN2	1.91(48.5)	0.45(11.4)	0.50(12.7)	0.06(1.5)	0.44(11.1)	0.50(12.7)	0.50(12.7)	0.33(8.3)	0.50(12.7)
1/8	1/4	-BCM-FL2-AN4	2.04(51.8)	0.55(14.0)	0.50(12.7)	0.09(2.3)	0.44(11.1)	0.63(15.9)	0.50(12.7)	0.33(8.3)	0.50(12.7)
3/16	3/16	-BCM-FL3-AN3	1.98(50.3)	0.48(12.2)	0.54(13.7)	0.12(3.0)	0.50(12.7)	0.56(14.3)	0.56(14.3)	0.39(9.9)	0.50(12.7)
1/4	1/4	-BCM-FL4-AN4	2.12(53.8)	0.55(14.0)	0.60(15.2)	0.17(4.3)	0.56(14.3)	0.63(15.9)	0.63(15.9)	0.45(11.5)	0.40(10.2)
5/16	5/16	-BCM-FL5-AN5	2.21(56.1)	0.55(14.0)	0.64(16.2)	0.23(5.8)	0.63(15.9)	0.69(17.5)	0.69(17.5)	0.52(13.1)	0.56(14.3)
3/8	1/4	-BCM-FL6-AN4	2.25(57.2)	0.55(14.0)	0.66(16.8)	0.17(4.3)	0.69(17.5)	0.75(19.1)	0.75(19.1)	0.58(14.7)	0.44(11.2)
3/8	3/8	-BCM-FL6-AN6	2.25(57.2)	0.56(14.2)	0.66(16.8)	0.28(7.1)	0.69(17.5)	0.75(19.1)	0.75(19.1)	0.58(14.7)	0.44(11.2)
1/2	1/2	-BCM-FL8-AN8	2.59(65.8)	0.66(16.8)	0.90(22.8)	0.39(9.9)	0.87(22.2)	0.94(23.8)	0.94(23.8)	0.76(19.4)	0.50(12.7)
5/8	5/8	-BCM-FL10-AN10	2.74(69.6)	0.76(19.3)	0.96(24.4)	0.48(12.3)	1.00(25.4)	1.06(27.0)	1.06(27.0)	0.89(22.6)	0.59(15.1)
3/4	3/4	-BCM-FL12-AN12	3.11(79.0)	0.86(21.8)	0.96(24.4)	0.61(15.5)	1.13(28.6)	1.19(30.2)	1.19(30.2)	1.02(25.8)	0.66(16.8)
1	1	-BCM-FL16-AN16	3.64(92.5)	0.91(23.1)	1.23(31.2)	0.84(21.3)	1.50(38.1)	1.63(41.3)	1.63(41.3)	1.33(33.7)	0.75(19.1)

Thermocouple Connectors

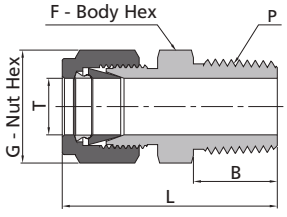

1. The T dimension refers to the smallest nominal orifice. It might be larger at tapered thread end, straight thread end.
2. To order single-ferrule thermocouple connector with only the ferrule material being non-metallic, the basic ordering number is -TCM-SF□-NS4-□F.
Example: SS-TCM-SFL6-NS4-TF
Note: "6" means 3/8 in. tube OD and "T" means PTFE ferrule material.

Fractional Tube						NPT Thread
T-Tube O.D. (in.)	P-NPT Size	Basic Ordering Number	Dimensions, in. (mm)			
			L	B	G	F
1/16	1/16	-TCM-FL1-NS1	0.94(23.9)	0.38(9.7)	0.31(7.9)	0.31(7.9)
1/16	1/8	-TCM-FL1-NS2	1.03(26.2)	0.38(9.7)	0.31(7.9)	0.44(11.1)
1/16	1/4	-TCM-FL1-NS4	1.22(31.0)	0.56(14.2)	0.31(7.9)	0.56(14.3)
1/8	1/16	-TCM-FL2-NS1	1.17(29.7)	0.38(9.7)	0.44(11.1)	0.44(11.1)
1/8	1/8	-TCM-FL2-NS2	1.20(30.5)	0.38(9.7)	0.44(11.1)	0.44(11.1)
1/8	1/4	-TCM-FL2-NS4	1.40(35.6)	0.56(14.2)	0.44(11.1)	0.56(14.3)
3/16	1/8	-TCM-FL3-NS2	1.23(31.2)	0.38(9.7)	0.50(12.7)	0.44(11.1)
3/16	1/4	-TCM-FL3-NS4	1.43(36.3)	0.56(14.2)	0.50(12.7)	0.56(14.3)
1/4	1/8	-TCM-FL4-NS2	1.29(32.8)	0.38(9.7)	0.56(14.3)	0.50(12.7)
1/4	1/4	-TCM-FL4-NS4	1.49(37.8)	0.56(14.2)	0.56(14.3)	0.56(14.3)
1/4	3/8	-TCM-FL4-NS6	1.51(38.4)	0.56(14.2)	0.56(14.3)	0.69(17.5)
1/4	1/2	-TCM-FL4-NS8	1.76(44.7)	0.75(19.1)	0.56(14.3)	0.87(22.2)
5/16	1/4	-TCM-FL5-NS4	1.52(38.6)	0.56(14.2)	0.63(15.9)	0.56(14.3)
3/8	1/4	-TCM-FL6-NS4	1.57(39.9)	0.56(14.2)	0.69(17.5)	0.63(15.9)
3/8	3/8	-TCM-FL6-NS6	1.57(39.9)	0.56(14.2)	0.69(17.5)	0.69(17.5)
3/8	1/2	-TCM-FL6-NS8	1.82(46.2)	0.75(19.1)	0.69(17.5)	0.87(22.2)
3/8	3/4	-TCM-FL6-NS12	1.88(47.8)	0.75(19.1)	0.69(17.5)	1.06(27.0)
1/2	1/2	-TCM-FL8-NS8	1.93(49.0)	0.75(19.1)	0.87(22.2)	0.87(22.2)
1/2	3/4	-TCM-FL8-NS12	1.99(50.5)	0.75(19.1)	0.87(22.2)	1.06(27.0)
5/8	3/4	-TCM-FL10-NS12	1.99(50.5)	0.75(19.1)	1.00(25.4)	1.06(27.0)
3/4	3/4	-TCM-FL12-NS12	1.99(50.5)	0.75(19.1)	1.13(28.6)	1.06(27.0)
1	1	-TCM-FL16-NS16	2.45(62.2)	0.94(23.9)	1.50(38.1)	1.37(34.9)

Thermocouple Connectors

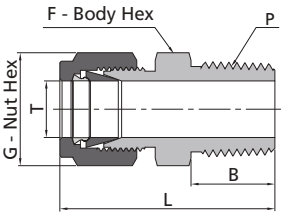

The T dimension refers to the smallest nominal orifice. It might be larger at tapered thread end, straight thread end.

Metric Tube			NPT Thread			
T-Tube O.D. (mm)	P-NPT Size	Basic Ordering Number	Dimensions, mm (in.)			
			L	B	G	F
2	1/8	-TCM-ML2-NS2	30.5(1.20)	9.7(0.38)	12.0(0.47)	12.0(0.47)
3	1/8	-TCM-ML3-NS2	30.5(1.20)	9.7(0.38)	12.0(0.47)	12.0(0.47)
3	1/4	-TCM-ML3-NS4	35.6(1.40)	14.2(0.56)	12.0(0.47)	14.0(0.55)
4	1/8	-TCM-ML4-NS2	31.2(1.23)	9.7(0.38)	12.0(0.47)	12.0(0.47)
4	1/4	-TCM-ML4-NS4	36.3(1.43)	14.2(0.56)	12.0(0.47)	14.0(0.55)
6	1/8	-TCM-ML6-NS2	32.8(1.29)	9.7(0.38)	14.0(0.55)	14.0(0.55)
6	1/4	-TCM-ML6-NS4	37.9(1.49)	14.2(0.56)	14.0(0.55)	14.0(0.55)
6	3/8	-TCM-ML6-NS6	38.4(1.51)	14.2(0.56)	14.0(0.55)	18.0(0.71)
6	1/2	-TCM-ML6-NS8	44.7(1.76)	19.1(0.75)	14.0(0.55)	22.0(0.87)
8	1/4	-TCM-ML8-NS4	38.7(1.52)	14.2(0.56)	16.0(0.63)	15.0(0.59)
8	3/8	-TCM-ML8-NS6	39.3(1.55)	14.2(0.56)	16.0(0.63)	18.0(0.71)
8	1/2	-TCM-ML8-NS8	45.6(1.80)	19.1(0.75)	16.0(0.63)	22.0(0.87)
10	3/8	-TCM-ML10-NS6	40.9(1.61)	14.2(0.56)	19.0(0.75)	18.0(0.71)
10	1/2	-TCM-ML10-NS8	46.5(1.83)	19.1(0.75)	19.0(0.75)	22.0(0.87)
10	3/4	-TCM-ML10-NS12	48.0(1.89)	19.1(0.75)	19.0(0.75)	27.0(1.06)
10	1	-TCM-ML10-NS16	54.6(2.15)	23.9(0.94)	19.0(0.75)	35.0(1.38)
12	3/8	-TCM-ML12-NS6	43.4(1.71)	14.2(0.56)	22.0(0.87)	22.0(0.87)
12	1/2	-TCM-ML12-NS8	49.0(1.93)	19.1(0.75)	22.0(0.87)	22.0(0.87)
12	3/4	-TCM-ML12-NS12	50.5(1.99)	19.1(0.75)	22.0(0.87)	27.0(1.06)
14	1/2	-TCM-ML14-NS8	49.0(1.93)	19.1(0.75)	25.0(0.98)	24.0(0.94)
14	3/4	-TCM-ML14-NS12	50.5(1.99)	19.1(0.75)	25.0(0.98)	27.0(1.06)
15	3/4	-TCM-ML15-NS12	50.5(1.99)	19.1(0.75)	25.0(0.98)	27.0(1.06)
15	1	-TCM-ML15-NS16	57.1(2.25)	23.9(0.94)	25.0(0.98)	35.0(1.38)
18	3/4	-TCM-ML18-NS12	50.5(1.99)	19.1(0.75)	30.0(1.18)	27.0(1.06)
20	1	-TCM-ML20-NS16	57.1(2.25)	23.9(0.94)	32.0(1.26)	35.0(1.38)
22	1	-TCM-ML22-NS16	57.1(2.25)	23.9(0.94)	32.0(1.26)	35.0(1.38)

Chromatograph Fittings

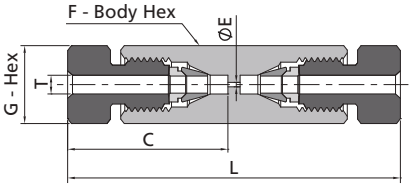

Fractional Tube							
T-Tube O.D (in.)	Basic Ordering Number	Dimensions, in. (mm)					Dead Volume
		L	C	E	G	F	
1/16	-U-NFL1-LV	1.26(32.0)	0.61(15.5)	0.01(0.3)	0.25(6.4)	0.25(6.4)	6.6×10^{-5} cm^3

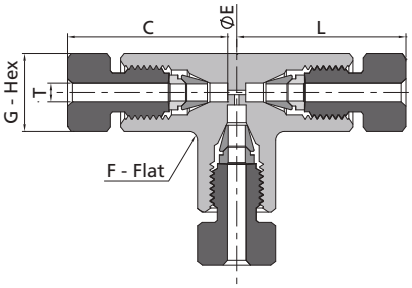

Fractional Tube							
T-Tube O.D (in.)	Basic Ordering Number	Dimensions, in. (mm)					Dead Volume
		L	C	E	G	F	
1/16	-TTT-NFL1-LV	0.66(16.8)	0.61(15.5)	0.01(0.3)	0.25(6.4)	0.37(9.5)	2.8×10^{-4} cm^3

Column End Fittings

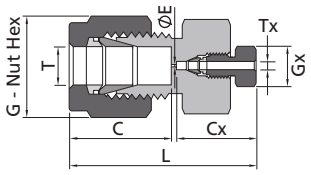

Fractional Tube

T-Tube O.D. (in.)	Tx-Tube O.D. (in.)	Basic Ordering Number	Dimensions, in. (mm)						Dead Volume
			L	C	Cx	E	G	Gx	
1/4	1/16	-U-FL4-NFL1-LV	1.24(31.5)	0.60(15.2)	0.61(15.5)	0.01(0.3)	0.56(14.3)	0.25(6.4)	6.8×10^{-5} cm^3
3/8	1/16	-U-FL6-NFL1-LV	1.30(33.0)	0.66(16.8)	0.61(15.5)	0.01(0.3)	0.69(17.5)	0.25(6.4)	6.8×10^{-5} cm^3

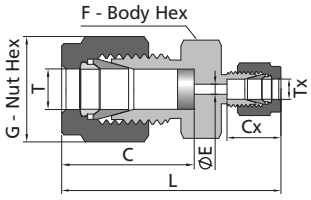

Fractional Tube

T-Tube O.D. (in.)	Tx-Tube O.D. (in.)	Basic Ordering Number	Dimensions, in. (mm)						Dead Volume
			L	C	Cx	G	F	E	
1/8	1/16	-U-FL2SN7-FL1-LV	1.22(31.0)	0.72(18.3)	0.34(8.6)	0.44(11.1)	0.44(11.1)	0.05(1.3)	5.4×10^{-3} cm^3
1/4	1/16	-U-FL4SN7-FL1-LV	1.35(34.3)	0.82(20.8)	0.34(8.6)	0.56(14.3)	0.50(12.7)	0.05(1.3)	6.7×10^{-3} cm^3
3/8	1/16	-U-FL6SN7-FL1-LV	1.44(36.6)	0.91(23.1)	0.34(8.6)	0.69(17.5)	0.63(15.9)	0.05(1.3)	6.5×10^{-3} cm^3

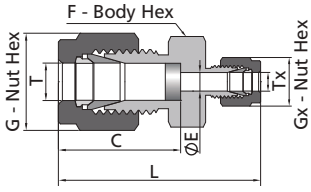

Fractional Tube

T-Tube O.D. (in.)	Tx-Tube O.D. (in.)	Basic Ordering Number	Dimensions, in. (mm)						Dead Volume
			L	C	G	Gx	F	E	
1/8	1/16	-U-FL2SN7-TFL1-ZV	1.22(31.0)	0.72(18.3)	0.44(11.1)	0.31(7.9)	0.44(11.1)	0.07(1.7)	0
1/4	1/16	-U-FL4SN7-TFL1-ZV	1.35(34.3)	0.82(20.8)	0.56(14.3)	0.31(7.9)	0.50(12.7)	0.07(1.7)	0
3/8	1/16	-U-FL6SN7-TFL1-ZV	1.44(36.6)	0.91(23.1)	0.69(17.5)	0.31(7.9)	0.63(15.9)	0.07(1.7)	0
1/2	1/16	-U-FL8SN7-TFL1-ZV	1.58(40.1)	1.04(26.4)	0.87(22.2)	0.31(7.9)	0.81(20.6)	0.07(1.7)	0

Nominal pore size of SN7 Stainless steel sinter is 7 um, and other nominal pore sizes are available. Stainless steel sinters are loosely installed to facilitate removal and replacement.

Female Connectors

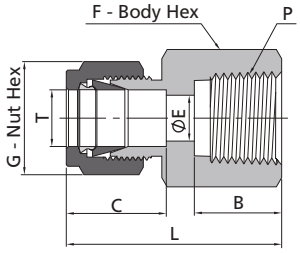

Fractional Tube — **NPT Thread**

T-Tube O.D. (in.)	P-NPT Size	Basic Ordering Number	Dimensions, in. (mm)					
			L	B	C	E	G	F
1/16	1/16	-CF-FL1-NS1	0.93(23.6)	0.39(9.9)	0.34(8.6)	0.05(1.3)	0.31(7.9)	0.44(11.1)
1/16	1/8	-CF-FL1-NS2	0.96(24.4)	0.41(10.4)	0.34(8.6)	0.05(1.3)	0.31(7.9)	0.56(14.3)
1/8	1/8	-CF-FL2-NS2	1.13(28.7)	0.41(10.4)	0.50(12.7)	0.09(2.3)	0.44(11.1)	0.56(14.3)
1/8	1/4	-CF-FL2-NS4	1.32(33.5)	0.59(15.0)	0.50(12.7)	0.09(2.3)	0.44(11.1)	0.75(19.1)
3/16	1/8	-CF-FL3-NS2	1.17(29.7)	0.41(10.4)	0.54(13.7)	0.12(3.0)	0.50(12.7)	0.56(14.3)
1/4	1/8	-CF-FL4-NS2	1.23(31.2)	0.41(10.4)	0.60(15.2)	0.19(4.8)	0.56(14.3)	0.56(14.3)
1/4	1/4	-CF-FL4-NS4	1.41(35.8)	0.59(15.0)	0.60(15.2)	0.19(4.8)	0.56(14.3)	0.75(19.1)
1/4	3/8	-CF-FL4-NS6	1.48(37.6)	0.59(15.0)	0.60(15.2)	0.19(4.8)	0.56(14.3)	0.87(22.2)
1/4	1/2	-CF-FL4-NS8	1.67(42.4)	0.78(19.8)	0.60(15.2)	16.3(4.8)	0.56(14.3)	1.06(27.0)
5/16	1/8	-CF-FL5-NS2	1.26(32.0)	0.41(10.4)	0.64(16.3)	16.3(6.4)	0.63(15.9)	0.56(14.3)
5/16	1/4	-CF-FL5-NS4	1.45(36.8)	0.59(15.0)	0.64(16.3)	0.25(6.4)	0.63(15.9)	0.75(19.1)
3/8	1/8	-CF-FL6-NS2	1.29(32.8)	0.41(10.4)	0.66(16.8)	0.28(7.1)	0.69(17.5)	0.63(15.9)
3/8	1/4	-CF-FL6-NS4	1.48(37.6)	0.59(15.0)	0.66(16.8)	0.28(7.1)	0.69(17.5)	0.75(19.1)
3/8	3/8	-CF-FL6-NS6	1.54(39.1)	0.59(15.0)	0.66(16.8)	1.34(7.1)	0.69(17.5)	0.88(22.2)
3/8	1/2	-CF-FL6-NS8	1.73(43.9)	0.78(19.8)	0.66(16.8)	0.28(7.1)	0.69(17.5)	1.06(27.0)
3/8	3/4	-CF-FL6-NS12	1.88(47.8)	0.81(20.6)	0.66(16.8)	0.28(7.1)	0.69(17.5)	1.31(33.3)
1/2	1/4	-CF-FL8-NS4	1.59(40.4)	0.59(15.0)	0.90(22.9)	0.41(10.4)	0.87(22.2)	0.81(20.6)
1/2	3/8	-CF-FL8-NS6	1.65(41.9)	0.59(15.0)	0.90(22.9)	0.41(10.4)	0.87(22.2)	0.87(22.2)
1/2	1/2	-CF-FL8-NS8	1.84(46.7)	0.78(19.8)	0.90(22.9)	0.41(10.4)	0.87(22.2)	1.06(27.0)
1/2	3/4	-CF-FL8-NS12	1.90(48.3)	0.81(20.6)	0.90(22.9)	0.41(10.4)	0.87(22.2)	1.31(33.3)
5/8	3/8	-CF-FL10-NS6	1.65(41.9)	0.59(15.0)	0.96(24.4)	0.50(12.7)	1.00(25.4)	0.94(23.8)
5/8	1/2	-CF-FL10-NS8	1.84(46.7)	0.78(19.8)	0.96(24.4)	0.50(12.7)	1.00(25.4)	1.06(27.0)

Female Connectors

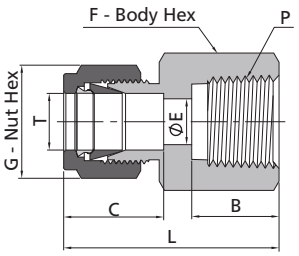

Fractional Tube — NPT Thread

T-Tube O.D. (in.)	P-NPT Size	Basic Ordering Number	Dimensions, in. (mm)					
			L	B	C	E	G	F
3/4	1/2	-CF-FL12-NS8	1.84(46.7)	0.78(19.8)	0.96(24.4)	0.62(15.7)	1.13(28.6)	1.06(27.0)
3/4	3/4	-CF-FL12-NS12	1.90(48.3)	0.81(20.6)	0.96(24.4)	0.62(15.7)	1.13(28.6)	1.31(33.3)
7/8	3/4	-CF-FL14-NS12	1.96(49.8)	0.81(20.6)	1.02(25.9)	0.72(18.3)	1.25(31.8)	1.31(33.3)
1	3/4	-CF-FL16-NS12	2.10(53.3)	0.81(20.6)	1.23(31.2)	0.88(22.4)	1.50(38.1)	1.37(34.9)
1	1	-CF-FL16-NS16	2.45(62.2)	1.00(25.4)	1.23(31.2)	0.88(22.4)	1.50(38.1)	1.63(41.3)
1 1/4	1 1/4	-CF-FL20-NS20	2.94(74.7)	1.00(25.4)	1.62(41.1)	1.09(27.7)	1.87(47.6)	2.13(54.0)
1 1/2	1 1/2	-CF-FL24-NS24	3.30(83.8)	1.09(27.7)	1.97(50.0)	1.34(34.0)	2.25(57.2)	2.37(60.3)

Fractional Tube — ISO Tapered Thread (RT)

T-Tube O.D. (in.)	P-RT Size	Basic Ordering Number	Dimensions, in. (mm)					
			L	B	C	E	G	F
1/4	1/8	-CF-FL4-RT2	1.23(31.2)	0.41(10.4)	0.60(15.2)	0.19(4.8)	0.56(14.3)	0.56(14.3)
1/4	1/4	-CF-FL4-RT4	1.41(35.8)	0.59(15.0)	0.60(15.2)	0.19(4.8)	0.56(14.3)	0.75(19.1)
1/4	3/8	-CF-FL4-RT6	1.48(37.6)	0.59(15.0)	0.60(15.2)	0.19(4.8)	0.56(14.3)	0.87(22.2)
1/4	1/2	-CF-FL4-RT8	1.67(42.4)	0.78(19.8)	0.60(15.2)	0.19(4.8)	0.56(14.3)	1.06(27.0)
3/8	1/4	-CF-FL6-RT4	1.48(37.6)	0.59(15.0)	0.66(16.8)	0.28(7.1)	0.69(17.5)	0.75(19.1)
3/8	3/8	-CF-FL6-RT6	1.54(39.1)	0.59(15.0)	0.66(16.8)	0.28(7.1)	0.69(17.5)	0.87(22.2)
3/8	1/2	-CF-FL6-RT8	1.73(43.9)	0.78(19.8)	0.66(16.8)	0.28(7.1)	0.69(17.5)	1.06(27.0)
1/2	1/4	-CF-FL8-RT4	1.59(40.4)	0.59(15.0)	0.90(22.9)	0.41(10.4)	0.87(22.2)	0.81(20.6)
1/2	3/8	-CF-FL8-RT6	1.65(41.9)	0.59(15.0)	0.90(22.9)	0.41(10.4)	0.87(22.2)	0.87(22.2)
1/2	1/2	-CF-FL8-RT8	1.84(46.7)	0.78(19.8)	0.90(22.9)	0.41(10.4)	0.87(22.2)	1.06(27.0)

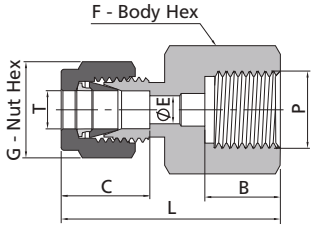

Fractional Tube — ISO Parallel Thread (RG)

T-Tube O.D. (in.)	P-RG Size	Basic Ordering Number	Dimensions, in. (mm)					
			L	B	C	E	G	F
1/8	1/4	-CF-FL2-RG4	1.39(35.3)	0.51(12.9)	0.50(12.7)	0.09(2.3)	0.44(11.1)	0.75(19.1)
1/8	3/8	-CF-FL2-RG6	1.52(38.7)	0.56(14.2)	0.50(12.7)	0.09(2.3)	0.44(11.1)	0.94(23.8)
1/4	1/4	-CF-FL4-RG4	1.48(37.6)	0.51(12.9)	0.60(15.2)	0.19(4.8)	0.56(14.3)	0.75(19.1)
1/4	3/8	-CF-FL4-RG6	1.48(37.6)	0.56(14.2)	0.60(15.2)	0.19(4.8)	0.56(14.3)	0.94(23.8)
1/4	1/2	-CF-FL4-RG8	1.71(43.4)	0.74(18.8)	0.60(15.2)	0.19(4.8)	0.56(14.3)	1.06(27.0)
5/16	1/4	-CF-FL5-RG4	1.51(38.4)	0.51(12.9)	0.64(16.3)	0.22(5.6)	0.63(15.9)	0.75(19.1)
5/16	3/8	-CF-FL5-RG6	1.45(36.9)	0.56(14.2)	0.64(16.3)	0.25(6.4)	0.63(15.9)	0.94(23.8)
5/16	1/2	-CF-FL5-RG8	1.61(40.9)	0.74(18.8)	0.64(16.3)	0.28(7.1)	0.63(15.9)	1.06(27.0)
3/8	1/4	-CF-FL6-RG4	1.54(39.1)	0.51(12.9)	0.66(16.8)	0.22(5.6)	0.69(17.5)	0.75(19.1)
3/8	3/8	-CF-FL6-RG6	1.52(38.6)	0.56(14.2)	0.66(16.8)	0.25(6.4)	0.69(17.5)	0.94(23.8)
3/8	1/2	-CF-FL6-RG8	1.65(41.9)	0.74(18.8)	0.66(16.8)	0.28(7.1)	0.69(17.5)	1.06(27.0)
1/2	1/4	-CF-FL8-RG4	1.65(41.9)	0.51(12.9)	0.90(22.9)	0.22(5.6)	0.87(22.2)	0.87(22.2)
1/2	3/8	-CF-FL8-RG6	1.75(44.5)	0.56(14.2)	0.90(22.9)	0.25(6.4)	0.87(22.2)	0.94(23.8)
1/2	1/2	-CF-FL8-RG8	1.90(48.3)	0.74(18.8)	0.90(22.9)	0.28(7.1)	0.87(22.2)	1.06(27.0)

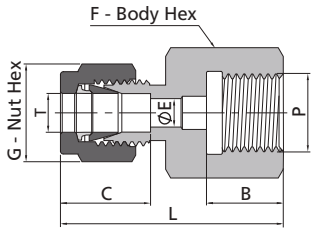

Adapt to Japanese gauge stud (JIS B7505)

Fractional Tube — ISO Parallel Thread (RJ)

T-Tube O.D. (in.)	P-RJ Size	Basic Ordering Number	Dimensions, in. (mm)					
			L	B	C	E	G	F
1/4	1/4	-CF-FL4-RJ4	1.48(37.6)	0.51(12.9)	0.60(15.2)	0.18(4.6)	0.56(14.3)	0.75(19.1)
1/4	3/8	-CF-FL4-RJ6	1.48(37.6)	0.62(15.8)	0.60(15.2)	0.19(4.8)	0.56(14.3)	0.94(23.8)
1/4	1/2	-CF-FL4-RJ8	1.71(43.4)	0.74(18.8)	0.60(15.2)	0.19(4.8)	0.56(14.3)	1.06(27.0)
5/16	1/4	-CF-FL5-RJ4	1.51(38.4)	0.51(12.9)	0.64(16.3)	0.22(5.6)	0.63(15.9)	0.75(19.1)
5/16	1/2	-CF-FL5-RJ8	1.61(40.9)	0.74(18.8)	0.64(16.3)	0.28(7.1)	0.63(15.9)	1.06(27.0)
3/8	1/4	-CF-FL6-RJ4	1.54(39.1)	0.51(12.9)	0.66(16.8)	0.22(5.6)	0.69(17.5)	0.75(19.1)
3/8	3/8	-CF-FL6-RJ6	1.52(38.6)	0.62(15.8)	0.66(16.8)	0.25(6.4)	0.69(17.5)	0.94(23.8)
3/8	1/2	-CF-FL6-RJ8	1.65(41.9)	0.74(18.8)	0.66(16.8)	0.28(7.1)	0.69(17.5)	1.06(27.0)
1/2	1/4	-CF-FL8-RJ4	1.65(41.9)	0.51(12.9)	0.90(22.9)	0.22(5.6)	0.87(22.2)	0.81(20.6)
1/2	3/8	-CF-FL8-RJ6	1.75(44.5)	0.62(15.8)	0.90(22.9)	0.25(6.4)	0.87(22.2)	0.94(23.8)
1/2	1/2	-CF-FL8-RJ8	1.90(48.3)	0.74(18.8)	0.90(22.9)	0.28(7.1)	0.87(22.2)	1.06(27.0)

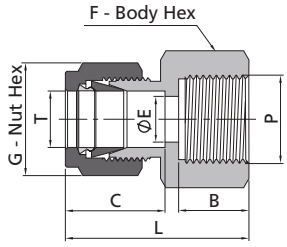

Fractional Tube — Metric Thread

T-Tube O.D. (in.)	P-Metric Thread Size	Basic Ordering Number	Dimensions, in. (mm)					
			L	B	C	E	G	F
1/8	M14 x 1.5	-CF-FL2-MS14	1.22(31.0)	0.51(13.0)	0.50(12.7)	0.09(2.3)	0.44(11.1)	0.75(19.1)
1/8	M16 x 1.5	-CF-FL2-MS16	1.31(33.3)	0.55(14.0)	0.50(12.7)	0.09(2.3)	0.44(11.1)	0.87(22.2)
1/8	M18 x 1.5	-CF-FL2-MS18	1.35(34.3)	0.59(15.0)	0.50(12.7)	0.09(2.3)	0.44(11.1)	1.00(25.4)
1/8	M20 x 1.5	-CF-FL2-MS20	1.39(35.3)	0.63(16.0)	0.50(12.7)	0.09(2.3)	0.44(11.1)	1.06(27.0)
1/4	M16 x 1.5	-CF-FL4-MS16	1.41(35.8)	0.55(14.0)	0.60(15.2)	0.19(4.8)	0.56(14.3)	0.87(22.2)
1/4	M18 x 1.5	-CF-FL4-MS18	1.45(36.8)	0.59(15.0)	0.60(15.2)	0.19(4.8)	0.56(14.3)	1.00(25.4)
1/4	M20 x 1.5	-CF-FL4-MS20	1.49(37.8)	0.63(16.0)	0.60(15.2)	0.19(4.8)	0.56(14.3)	1.06(27.0)
3/8	M14 x 1.5	-CF-FL6-MS14	1.46(37.1)	0.51(13.0)	0.66(16.8)	0.28(7.1)	0.69(17.5)	0.75(19.1)
3/8	M16 x 1.5	-CF-FL6-MS16	1.48(37.5)	0.55(14.0)	0.66(16.8)	0.28(7.1)	0.69(17.5)	0.87(22.2)
3/8	M18 x 1.5	-CF-FL6-MS18	1.52(38.5)	0.59(15.0)	0.66(16.8)	0.28(7.1)	0.69(17.5)	1.00(25.4)
3/8	M20 x 1.5	-CF-FL6-MS20	1.56(39.5)	0.63(16.0)	0.66(16.8)	0.28(7.1)	0.69(17.5)	1.06(27.0)
1/2	M16 x 1.5	-CF-FL8-MS16	1.63(41.4)	0.55(14.0)	0.90(22.9)	0.33(8.4)	0.87(22.2)	0.87(22.2)
1/2	M18 x 1.5	-CF-FL8-MS18	1.67(42.4)	0.59(15.0)	0.90(22.9)	0.38(9.6)	0.87(22.2)	1.00(25.4)
1/2	M20 x 1.5	-CF-FL8-MS20	1.71(43.4)	0.63(16.0)	0.90(22.9)	0.41(10.4)	0.87(22.2)	1.06(27.0)
1/2	M22 x 1.5	-CF-FL8-MS22	1.65(41.9)	0.63(16.0)	0.90(22.9)	0.38(9.7)	0.87(22.2)	1.06(27.0)

Female Connectors

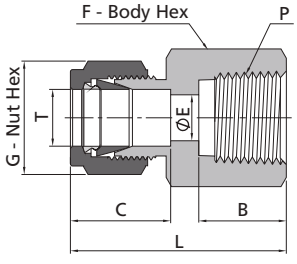

Metric Tube — NPT Thread

T-Tube O.D. (mm)	P-NPT Size	Basic Ordering Number	Dimensions, mm (in.)					
			L	B	C	E	G	F
3	1/8	-CF-ML3-NS2	28.7(1.13)	10.4(0.41)	12.9(0.51)	2.4(0.09)	12.0(0.47)	14.0(0.55)
3	1/4	-CF-ML3-NS4	33.5(1.32)	15.0(0.59)	12.9(0.51)	2.4(0.09)	12.0(0.47)	19.0(0.75)
4	1/8	-CF-ML4-NS2	29.7(1.17)	10.4(0.41)	13.7(0.54)	2.4(0.09)	12.0(0.47)	14.0(0.55)
6	1/8	-CF-ML6-NS2	31.3(1.23)	10.4(0.41)	15.3(0.60)	4.8(0.19)	14.0(0.55)	14.0(0.55)
6	1/4	-CF-ML6-NS4	35.8(1.41)	15.0(0.59)	15.3(0.60)	4.8(0.19)	14.0(0.55)	19.0(0.75)
6	3/8	-CF-ML6-NS6	37.7(1.48)	15.0(0.59)	15.3(0.60)	4.8(0.19)	14.0(0.55)	22.0(0.87)
6	1/2	-CF-ML6-NS8	42.5(1.67)	19.8(0.78)	15.3(0.60)	4.8(0.19)	14.0(0.55)	27.0(1.06)
8	1/8	-CF-ML8-NS2	32.1(1.26)	10.4(0.41)	16.2(0.64)	6.4(0.25)	16.0(0.63)	15.0(0.59)
8	1/4	-CF-ML8-NS4	37.0(1.46)	15.0(0.59)	16.2(0.64)	6.4(0.25)	16.0(0.63)	19.0(0.75)
8	3/8	-CF-ML8-NS6	38.5(1.52)	15.0(0.59)	16.2(0.64)	6.4(0.25)	16.0(0.63)	22.0(0.87)
8	1/2	-CF-ML8-NS8	43.3(1.70)	19.8(0.78)	16.2(0.64)	6.4(0.25)	16.0(0.63)	27.0(1.06)
10	1/8	-CF-ML10-NS2	33.0(1.30)	10.4(0.41)	17.2(0.68)	7.9(0.31)	19.0(0.75)	18.0(0.71)
10	1/4	-CF-ML10-NS4	37.8(1.49)	15.0(0.59)	17.2(0.68)	7.9(0.31)	19.0(0.75)	19.0(0.75)
10	3/8	-CF-ML10-NS6	39.4(1.55)	15.0(0.59)	17.2(0.68)	7.9(0.31)	19.0(0.75)	22.0(0.87)
10	1/2	-CF-ML10-NS8	44.2(1.74)	19.8(0.78)	17.2(0.68)	7.9(0.31)	19.0(0.75)	27.0(1.06)

Female Connectors

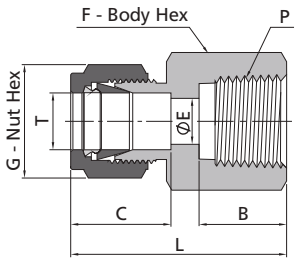

Metric Tube									NPT Thread
T-Tube O.D. (mm)	P-NPT Size	Basic Ordering Number	Dimensions, mm (in.)						
			L	B	C	E	G	F	
12	1/4	-CF-ML12-NS4	40.3(1.59)	15.0(0.59)	22.8(0.90)	9.5(0.37)	22.0(0.87)	22.0(0.87)	
12	3/8	-CF-ML12-NS6	41.9(1.65)	15.0(0.59)	22.8(0.90)	9.5(0.37)	22.0(0.87)	22.0(0.87)	
12	1/2	-CF-ML12-NS8	46.7(1.84)	19.8(0.78)	22.8(0.90)	9.5(0.37)	22.0(0.87)	27.0(1.06)	
12	3/4	-CF-ML12-NS12	49.1(1.93)	20.6(0.81)	22.8(0.90)	9.5(0.37)	22.0(0.87)	35.0(1.38)	
14	3/4	-CF-ML14-NS12	49.7(1.96)	20.6(0.81)	24.4(0.96)	11.1(0.44)	25.0(0.98)	35.0(1.38)	
15	1/2	-CF-ML15-NS8	46.7(1.84)	19.8(0.78)	24.4(0.96)	11.9(0.47)	25.0(0.98)	27.0(1.06)	
16	3/8	-CF-ML16-NS6	41.9(1.65)	15.0(0.59)	24.4(0.96)	12.7(0.50)	25.0(0.98)	27.0(1.06)	
16	1/2	-CF-ML16-NS8	46.9(1.85)	19.8(0.78)	24.4(0.96)	12.7(0.50)	25.0(0.98)	27.0(1.06)	
20	1/2	-CF-ML20-NS8	47.9(1.89)	19.8(0.78)	26.0(1.02)	15.9(0.63)	32.0(1.26)	30.0(1.18)	
20	3/4	-CF-ML20-NS12	49.7(1.96)	20.6(0.81)	26.0(1.02)	15.9(0.63)	32.0(1.26)	35.0(1.38)	
22	3/4	-CF-ML22-NS12	49.7(1.96)	20.6(0.81)	26.0(1.02)	18.3(0.72)	32.0(1.26)	35.0(1.38)	
22	1	-CF-ML22-NS16	57.9(2.28)	25.4(1.00)	26.0(1.02)	18.3(0.72)	32.0(1.26)	41.0(1.61)	
25	3/4	-CF-ML25-NS12	53.4(2.10)	20.6(0.81)	31.3(1.23)	21.8(0.86)	38.0(1.50)	35.0(1.38)	
25	1	-CF-ML25-NS16	62.3(2.45)	25.4(1.00)	31.3(1.23)	21.8(0.86)	38.0(1.50)	41.0(1.61)	

Female Connectors

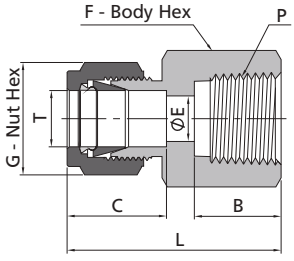

Metric Tube									ISO Tapered Thread (RT)
T-Tube O.D. (mm)	P-RT Size	Basic Ordering Number	Dimensions, mm (in.)						
			L	B	C	E	G	F	
3	1/8	-CF-ML3-RT2	28.7(1.13)	10.4(0.41)	12.9(0.51)	2.4(0.09)	12.0(0.47)	14.0(0.55)	
6	1/8	-CF-ML6-RT2	31.3(1.23)	10.4(0.41)	15.3(0.60)	4.8(0.19)	14.0(0.55)	14.0(0.55)	
6	1/4	-CF-ML6-RT4	35.8(1.41)	15.0(0.59)	15.3(0.60)	4.8(0.19)	14.0(0.55)	19.0(0.75)	
6	3/8	-CF-ML6-RT6	37.9(1.49)	15.0(0.59)	15.3(0.60)	4.8(0.19)	14.0(0.55)	22.0(0.87)	
6	1/2	-CF-ML6-RT8	42.5(1.67)	19.8(0.78)	15.3(0.60)	4.8(0.19)	14.0(0.55)	27.0(1.06)	
8	1/8	-CF-ML8-RT2	32.1(1.26)	10.4(0.41)	16.2(0.64)	6.4(0.25)	16.0(0.63)	15.0(0.59)	
8	1/4	-CF-ML8-RT4	37.0(1.46)	15.0(0.59)	16.2(0.64)	6.4(0.25)	16.0(0.63)	19.0(0.75)	
8	3/8	-CF-ML8-RT6	38.5(1.52)	15.0(0.59)	16.2(0.64)	6.4(0.25)	16.0(0.63)	22.0(0.87)	
8	1/2	-CF-ML8-RT8	43.3(1.70)	19.8(0.78)	16.2(0.64)	6.4(0.25)	16.0(0.63)	27.0(1.06)	
10	1/8	-CF-ML10-RT2	33.0(1.30)	10.4(0.41)	17.2(0.68)	7.9(0.31)	19.0(0.75)	18.0(0.71)	
10	1/4	-CF-ML10-RT4	37.8(1.49)	15.0(0.59)	17.2(0.68)	7.9(0.31)	19.0(0.75)	19.0(0.75)	
10	3/8	-CF-ML10-RT6	39.4(1.55)	15.0(0.59)	17.2(0.68)	7.9(0.31)	19.0(0.75)	22.0(0.87)	
10	1/2	-CF-ML10-RT8	44.2(1.74)	19.8(0.78)	17.2(0.68)	7.9(0.31)	19.0(0.75)	27.0(1.06)	
12	1/8	-CF-ML12-RT2	35.5(1.40)	10.4(0.41)	22.8(0.90)	8.3(0.33)	22.0(0.87)	22.0(0.87)	
12	1/4	-CF-ML12-RT4	40.3(1.59)	15.0(0.59)	22.8(0.90)	9.5(0.37)	22.0(0.87)	22.0(0.87)	
12	3/8	-CF-ML12-RT6	41.9(1.65)	15.0(0.59)	22.8(0.90)	9.5(0.37)	22.0(0.87)	22.0(0.87)	
12	1/2	-CF-ML12-RT8	46.7(1.84)	19.8(0.78)	22.8(0.90)	9.5(0.37)	22.0(0.87)	27.0(1.06)	
12	3/4	-CF-ML12-RT12	49.0(1.93)	20.6(0.81)	22.8(0.90)	9.5(0.37)	22.0(0.87)	35.0(1.38)	
15	1/2	-CF-ML15-RT8	46.7(1.84)	19.8(0.78)	24.4(0.96)	11.9(0.47)	25.0(0.98)	27.0(1.06)	
16	1/2	-CF-ML16-RT8	48.4(1.91)	19.8(0.78)	24.4(0.96)	12.7(0.50)	25.0(0.98)	27.0(1.06)	
16	3/4	-CF-ML16-RT12	49.7(1.96)	20.6(0.81)	24.4(0.96)	12.7(0.50)	25.0(0.98)	35.0(1.38)	
20	1/2	-CF-ML20-RT8	47.9(1.89)	19.8(0.78)	26.0(1.02)	15.9(0.63)	32.0(1.26)	30.0(1.18)	
20	3/4	-CF-ML20-RT12	49.7(1.96)	20.6(0.81)	26.0(1.02)	15.9(0.63)	32.0(1.26)	35.0(1.38)	
22	3/4	-CF-ML22-RT12	49.7(1.96)	20.6(0.81)	26.0(1.02)	18.3(0.72)	32.0(1.26)	35.0(1.38)	
22	1	-CF-ML22-RT16	57.9(2.28)	25.4(1.00)	26.0(1.02)	18.3(0.72)	32.0(1.26)	41.0(1.61)	
25	3/4	-CF-ML25-RT12	53.4(2.10)	20.6(0.81)	31.3(1.23)	21.8(0.86)	38.0(1.50)	35.0(1.38)	
25	1	-CF-ML25-RT16	62.3(2.45)	25.4(1.00)	31.3(1.23)	21.8(0.86)	38.0(1.50)	41.0(1.61)	

Female Connectors

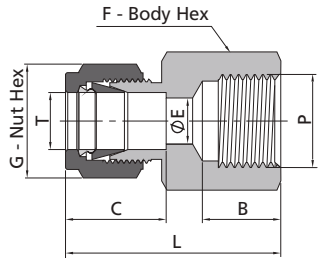

Metric Tube								ISO Parallel Thread (RP)
T-Tube O.D. (mm)	P-RP Size	Basic Ordering Number	Dimensions, mm (in.)					
			L	B	C	E	G	F
6	1/8	-CF-ML6-RP2	33.5(1.32)	15.5(0.61)	15.3(0.60)	4.8(0.19)	14.0(0.55)	14.0(0.55)
6	1/4	-CF-ML6-RP4	39.4(1.55)	15.5(0.61)	15.3(0.60)	4.8(0.19)	14.0(0.55)	19.0(0.75)
22	3/4	-CF-ML22-RP12	53.3(2.10)	20.5(0.81)	26.0(1.02)	18.3(0.72)	32.0(1.26)	35.0(1.38)
25	1	-CF-ML25-RP16	63.9(2.52)	23.5(0.93)	31.3(1.23)	21.8(0.86)	38.0(1.50)	40.0(1.57)

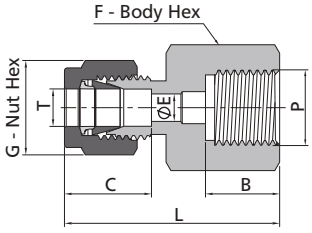

Metric Tube								ISO Parallel Thread (RG)
T-Tube O.D. (mm)	P-RG Size	Basic Ordering Number	Dimensions, mm (in.)					
			L	B	C	E	G	F
3	1/4	-CF-ML3-RG4	35.3(1.39)	12.9(0.51)	12.9(0.51)	2.4(0.09)	12.0(0.47)	19.0(0.75)
6	1/4	-CF-ML6-RG4	37.6(1.48)	12.9(0.51)	15.3(0.60)	4.8(0.19)	14.0(0.55)	19.0(0.75)
6	3/8	-CF-ML6-RG6	37.6(1.48)	14.2(0.56)	15.3(0.60)	4.8(0.19)	14.0(0.55)	24.0(0.94)
6	1/2	-CF-ML6-RG8	43.5(1.71)	18.8(0.74)	15.3(0.60)	4.8(0.19)	14.0(0.55)	27.0(1.06)
8	1/4	-CF-ML8-RG4	38.5(1.52)	12.9(0.51)	16.2(0.64)	5.5(0.22)	16.0(0.63)	19.0(0.75)
8	3/8	-CF-ML8-RG6	36.2(1.43)	14.2(0.56)	16.2(0.64)	6.4(0.25)	16.0(0.63)	24.0(0.94)
8	1/2	-CF-ML8-RG8	41.0(1.61)	18.8(0.74)	16.2(0.64)	6.4(0.25)	16.0(0.63)	27.0(1.06)
10	1/4	-CF-ML10-RG4	39.4(1.55)	12.9(0.51)	17.2(0.68)	5.5(0.22)	19.0(0.75)	19.0(0.75)
10	3/8	-CF-ML10-RG6	38.8(1.53)	14.2(0.56)	17.2(0.68)	6.4(0.25)	19.0(0.75)	24.0(0.94)
10	1/2	-CF-ML10-RG8	42.1(1.66)	18.8(0.74)	17.2(0.68)	7.9(0.31)	19.0(0.75)	27.0(1.06)
12	1/4	-CF-ML12-RG4	41.9(1.65)	12.9(0.51)	22.8(0.90)	5.5(0.22)	22.0(0.87)	22.0(0.87)
12	3/8	-CF-ML12-RG6	44.4(1.75)	14.2(0.56)	22.8(0.90)	6.4(0.25)	22.0(0.87)	24.0(0.94)
12	1/2	-CF-ML12-RG8	48.2(1.90)	18.8(0.74)	22.8(0.90)	7.1(0.28)	22.0(0.87)	27.0(1.06)
20	1/2	-CF-ML20-RG8	54.3(2.14)	18.8(0.74)	26.0(1.02)	7.1(0.28)	32.0(1.26)	30.0(1.18)
22	1/2	-CF-ML22-RG8	54.3(2.14)	18.8(0.74)	26.0(1.02)	7.1(0.28)	32.0(1.26)	30.0(1.18)

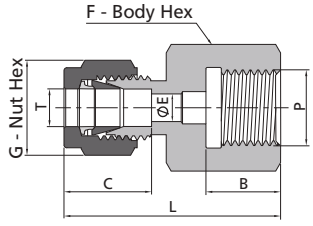

Adapt to Japanese Gauge stud (JIS B7505)

Metric Tube								ISO Parallel Thread (RJ)
T-Tube O.D. (mm)	P-RJ Size	Basic Ordering Number	Dimensions, mm (in.)					
			L	B	C	E	G	F
6	1/4	-CF-ML6-RJ4	37.6(1.48)	12.9(0.51)	15.3(0.60)	4.8(0.19)	14.0(0.55)	19.0(0.75)
6	3/8	-CF-ML6-RJ6	37.6(1.48)	15.8(0.62)	15.3(0.60)	4.8(0.19)	14.0(0.55)	24.0(0.94)
6	1/2	-CF-ML6-RJ8	43.5(1.71)	18.8(0.74)	15.3(0.60)	4.8(0.19)	14.0(0.55)	27.0(1.06)
8	1/4	-CF-ML8-RJ4	38.5(1.52)	12.9(0.51)	16.2(0.64)	5.5(0.22)	16.0(0.63)	19.0(0.75)
8	3/8	-CF-ML8-RJ6	36.2(1.43)	15.8(0.62)	16.2(0.64)	6.5(0.26)	16.0(0.63)	24.0(0.94)
8	1/2	-CF-ML8-RJ8	41.0(1.61)	18.8(0.74)	16.2(0.64)	7.0(0.28)	16.0(0.63)	27.0(1.06)
10	1/4	-CF-ML10-RJ4	39.4(1.55)	12.9(0.51)	17.2(0.68)	5.5(0.22)	19.0(0.75)	19.0(0.75)
10	3/8	-CF-ML10-RJ6	38.8(1.53)	15.8(0.62)	17.2(0.68)	6.5(0.26)	19.0(0.75)	24.0(0.94)
10	1/2	-CF-ML10-RJ8	42.1(1.66)	18.8(0.74)	17.2(0.68)	7.0(0.28)	19.0(0.75)	27.0(1.06)
12	1/4	-CF-ML12-RJ4	41.9(1.65)	12.9(0.51)	22.8(0.90)	5.5(0.22)	22.0(0.87)	22.0(0.87)
12	3/8	-CF-ML12-RJ6	44.4(1.75)	15.8(0.62)	22.8(0.90)	6.5(0.26)	22.0(0.87)	24.0(0.94)
12	1/2	-CF-ML12-RJ8	48.2(1.90)	18.8(0.74)	22.8(0.90)	7.0(0.28)	22.0(0.87)	27.0(1.06)

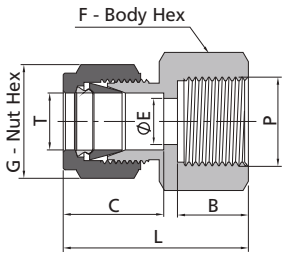

Metric Tube									Metric Thread
T-Tube O.D. (mm)	P-Metric Thread Size	Basic Ordering Number	Dimensions, mm (in.)						
			L	B	C	E	G	F	
6	M10 x 1	-CF-ML6-MS10	32.7(1.29)	11.0(0.43)	15.3(0.60)	4.7(0.19)	14.0(0.55)	16.0(0.63)	
6	M14 x 1.5	-CF-ML6-MS14	36.1(1.42)	13.0(0.51)	15.3(0.60)	4.8(0.19)	14.0(0.55)	19.0(0.75)	
6	M20 x 1.5	-CF-ML6-MS20	37.7(1.48)	16.0(0.63)	15.3(0.60)	4.8(0.19)	14.0(0.55)	27.0(1.06)	
8	M8 x 1	-CF-ML8-MS8	31.6(1.24)	9.0(0.35)	16.2(0.64)	3.0(0.12)	16.0(0.63)	14.0(0.55)	
8	M10 x 1	-CF-ML8-MS10	33.6(1.32)	11.0(0.43)	16.2(0.64)	4.0(0.16)	16.0(0.63)	16.0(0.63)	
8	M14 x 1.5	-CF-ML8-MS14	35.6(1.40)	13.0(0.51)	16.2(0.64)	6.4(0.25)	16.0(0.63)	19.0(0.75)	
8	M20 x 1.5	-CF-ML8-MS20	38.6(1.52)	16.0(0.63)	16.2(0.64)	6.4(0.25)	16.0(0.63)	27.0(1.06)	
10	M16 x 1.5	-CF-ML10-MS16	38.1(1.50)	14.0(0.55)	17.2(0.68)	7.9(0.31)	19.0(0.75)	22.0(0.87)	
12	M20 x 1.5	-CF-ML12-MS20	44.9(1.77)	16.0(0.63)	22.8(0.90)	9.5(0.37)	22.0(0.87)	27.0(1.06)	
14	M10 x 1	-CF-ML14-MS10	42.5(1.67)	11.0(0.43)	24.4(0.96)	4.0(0.16)	25.0(0.98)	24.0(0.94)	
14	M20 x 1.5	-CF-ML14-MS20	44.9(1.77)	16.0(0.63)	24.4(0.96)	10.8(0.43)	25.0(0.98)	27.0(1.06)	
14	M22 x 1.5	-CF-ML14-MS22	45.9(1.81)	17.0(0.67)	24.4(0.96)	11.1(0.44)	25.0(0.98)	27.0(1.06)	
16	M20 x 1.5	-CF-ML16-MS20	44.9(1.77)	16.0(0.63)	24.4(0.96)	10.8(0.43)	25.0(0.98)	27.0(1.06)	
20	M20 x 1.5	-CF-ML20-MS20	46.5(1.83)	16.0(0.63)	26.0(1.02)	10.8(0.43)	32.0(1.26)	30.0(1.18)	
25	M27 x 2	-CF-ML25-MS27	54.4(2.14)	18.0(0.71)	31.3(1.23)	16.1(0.63)	38.0(1.50)	35.0(1.38)	

Bulkhead Female Connectors

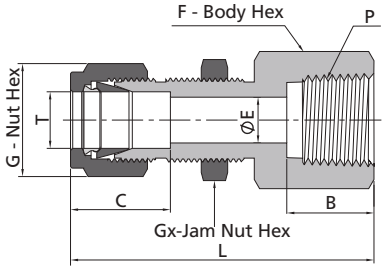

Fractional Tube											NPT Thread
T-Tube O.D. (in.)	P-NPT Size	Basic Ordering Number	Dimensions, in. (mm)							Panel Hole Size in. (mm)	Max. Panel Thickness in. (mm)
			L	B	C	E	G	F	Gx		
1/16	1/16	-BCF-FL1-NS1	1.19(30.2)	0.39(9.9)	0.34(8.6)	0.05(1.3)	0.31(7.9)	0.44(11.1)	0.31(7.9)	0.20(5.2)	0.13(3.2)
1/16	1/8	-BCF-FL1-NS2	1.20(30.7)	0.41(10.4)	0.34(8.6)	0.05(1.3)	0.31(7.9)	0.56(14.3)	0.31(7.9)	0.20(5.2)	0.13(3.2)
1/8	1/8	-BCF-FL2-NS2	1.76(44.7)	0.41(10.4)	0.50(12.7)	0.09(2.3)	0.44(11.1)	0.56(14.3)	0.50(12.7)	0.33(8.3)	0.50(12.7)
1/8	1/4	-BCF-FL2-NS4	1.95(49.6)	0.59(15.0)	0.50(12.7)	0.09(2.3)	0.44(11.1)	0.75(19.1)	0.50(12.7)	0.33(8.3)	0.50(12.7)
3/16	1/8	-BCF-FL3-NS2	1.79(45.5)	0.41(10.4)	0.54(13.7)	0.12(3.0)	0.50(12.7)	0.56(14.3)	0.56(14.3)	0.39(9.9)	0.50(12.7)
1/4	1/8	-BCF-FL4-NS2	1.85(47.0)	0.41(10.4)	0.60(15.2)	0.19(4.8)	0.56(14.3)	0.63(15.9)	0.63(15.9)	0.45(11.5)	0.40(10.2)
1/4	1/4	-BCF-FL4-NS4	2.04(51.8)	0.59(15.0)	0.60(15.2)	0.19(4.8)	0.56(14.3)	0.75(19.1)	0.63(15.9)	0.45(11.5)	0.40(10.2)
1/4	3/8	-BCF-FL4-NS6	2.10(53.3)	0.59(15.0)	0.60(15.2)	0.19(4.8)	0.56(14.3)	0.87(22.2)	0.63(15.9)	0.45(11.5)	0.40(10.2)
1/4	1/2	-BCF-FL4-NS8	2.29(58.2)	0.78(19.8)	0.60(15.2)	0.19(4.8)	0.56(14.3)	1.06(27.0)	0.63(15.9)	0.45(11.5)	0.40(10.2)
5/16	1/8	-BCF-FL5-NS2	1.96(49.8)	0.41(10.4)	0.64(16.3)	0.25(6.4)	0.63(15.9)	0.69(17.5)	0.69(17.5)	0.52(13.1)	0.44(11.2)
5/16	1/4	-BCF-FL5-NS4	2.38(60.5)	0.59(15.0)	0.64(16.3)	0.25(6.4)	0.63(15.9)	0.75(19.1)	0.69(17.5)	0.52(13.1)	0.44(11.2)
3/8	1/8	-BCF-FL6-NS2	1.98(50.3)	0.41(10.4)	0.66(16.8)	0.28(7.1)	0.69(17.5)	0.75(19.1)	0.75(19.1)	0.58(14.7)	0.44(11.2)
3/8	1/4	-BCF-FL6-NS4	2.17(55.1)	0.59(15.0)	0.66(16.8)	0.28(7.1)	0.69(17.5)	0.75(19.1)	0.75(19.1)	0.58(14.7)	0.44(11.2)
3/8	3/8	-BCF-FL6-NS6	2.23(56.6)	0.59(15.0)	0.66(16.8)	0.28(7.1)	0.69(17.5)	0.87(22.2)	0.75(19.1)	0.58(14.7)	0.44(11.2)
3/8	1/2	-BCF-FL6-NS8	2.42(61.5)	0.78(19.8)	0.66(16.8)	0.28(7.1)	0.69(17.5)	1.06(27.0)	0.75(19.1)	0.58(14.7)	0.44(11.2)
3/8	3/4	-BCF-FL6-NS12	2.57(65.3)	0.81(20.6)	0.66(16.8)	0.28(7.1)	0.69(17.5)	1.31(33.3)	0.75(19.1)	0.58(14.7)	0.44(11.2)
1/2	1/4	-BCF-FL8-NS4	2.37(60.2)	0.59(15.0)	0.90(22.9)	0.41(10.4)	0.87(22.2)	0.94(23.8)	0.94(23.8)	0.76(19.4)	0.50(12.7)
1/2	3/8	-BCF-FL8-NS6	2.43(61.7)	0.59(15.0)	0.90(22.9)	0.41(10.4)	0.87(22.2)	0.94(23.8)	0.94(23.8)	0.76(19.4)	0.50(12.7)
1/2	1/2	-BCF-FL8-NS8	2.62(66.5)	0.78(19.8)	0.90(22.9)	0.41(10.4)	0.87(22.2)	1.06(27.0)	0.94(23.8)	0.76(19.4)	0.50(12.7)
1/2	3/4	-BCF-FL8-NS12	2.68(68.1)	0.81(20.6)	0.90(22.9)	0.41(10.4)	0.87(22.2)	1.31(33.3)	0.94(23.8)	0.76(19.4)	0.50(12.7)

Bulkhead Female Connectors

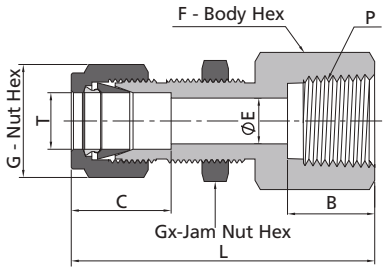

Fractional Tube											NPT Thread
T-Tube O.D. (in.)	P-NPT Size	Basic Ordering Number	Dimensions, in. (mm)							Panel Hole Size in. (mm)	Max. Panel Thickness in. (mm)
			L	B	C	E	G	F	Gx		
5/8	3/8	-BCF-FL10-NS6	2.46(62.5)	0.59(15.0)	0.96(24.4)	0.50(12.7)	1.00(25.4)	1.06(27.0)	1.06(27.0)	0.89(22.6)	0.59(15.1)
5/8	1/2	-BCF-FL10-NS8	2.65(67.3)	0.78(19.8)	0.96(24.4)	0.50(12.7)	1.00(25.4)	1.06(27.0)	1.06(27.0)	0.89(22.6)	0.59(15.1)
3/4	1/2	-BCF-FL12-NS8	2.84(72.2)	0.78(19.8)	0.96(24.4)	0.62(15.7)	1.13(28.6)	1.19(30.2)	1.19(30.2)	1.02(25.8)	0.78(19.8)
3/4	3/4	-BCF-FL12-NS12	2.90(73.7)	0.81(20.6)	0.96(24.4)	0.62(15.7)	1.13(28.6)	1.31(33.3)	1.19(30.2)	1.02(25.8)	0.78(19.8)
7/8	3/4	-BCF-FL14-NS12	3.18(80.8)	0.81(20.6)	1.02(25.9)	0.72(18.3)	1.25(31.8)	1.31(33.3)	1.31(33.3)	1.14(29.0)	0.94(23.8)
1	3/4	-BCF-FL16-NS12	3.33(84.7)	0.81(20.6)	1.23(31.2)	0.88(22.4)	1.50(38.1)	1.63(41.3)	1.63(41.3)	1.33(33.7)	0.94(23.8)
1	1	-BCF-FL16-NS16	3.68(93.5)	1.00(25.4)	1.23(31.2)	0.88(22.4)	1.50(38.1)	1.63(41.3)	1.63(41.3)	1.33(33.7)	0.94(23.8)

Metric Tube											NPT Thread
T-Tube O.D. (mm)	P-NPT Size	Basic Ordering Number	Dimensions, mm (in.)							Panel Hole Size mm (in.)	Max. Panel Thickness mm (in.)
			L	B	C	E	G	F	Gx		
6	1/8	-BCF-ML6-NS2	47.2(1.86)	10.4(0.41)	15.3(0.60)	4.8(0.19)	14.0(0.55)	16.0(0.63)	16.0(0.63)	11.5(0.45)	10.2(0.40)
6	1/4	-BCF-ML6-NS4	51.8(2.04)	15.0(0.59)	15.3(0.60)	4.8(0.19)	14.0(0.55)	19.0(0.75)	16.0(0.63)	11.5(0.45)	10.2(0.40)
8	1/8	-BCF-ML8-NS2	49.6(1.95)	10.4(0.41)	16.2(0.64)	6.4(0.25)	16.0(0.63)	18.0(0.71)	18.0(0.71)	13.1(0.52)	11.2(0.44)
10	1/4	-BCF-ML10-NS4	55.2(2.17)	15.0(0.59)	17.2(0.68)	7.9(0.31)	19.0(0.75)	22.0(0.87)	22.0(0.87)	16.3(0.64)	11.2(0.44)
12	3/8	-BCF-ML12-NS6	62.9(2.48)	15.0(0.59)	22.8(0.90)	9.5(0.37)	22.0(0.87)	24.0(0.94)	24.0(0.94)	19.5(0.77)	12.7(0.50)
12	1/2	-BCF-ML12-NS8	66.5(2.62)	19.8(0.78)	22.8(0.90)	9.5(0.37)	22.0(0.87)	27.0(1.06)	24.0(0.94)	19.5(0.77)	12.7(0.50)

Unions

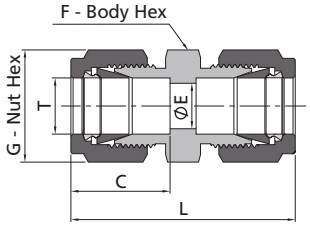

Fractional Tube						
T-Tube O.D. (in.)	Basic Ordering Number	Dimensions, in. (mm)				
		L	C	G	F	E
1/16	-U-FL1	0.99(25.1)	0.34(8.6)	0.31(7.9)	0.31(7.9)	0.05(1.3)
1/8	-U-FL2	1.40(35.6)	0.50(12.7)	0.44(11.1)	0.44(11.1)	0.09(2.3)
3/16	-U-FL3	1.47(37.3)	0.54(13.7)	0.50(12.7)	0.50(12.7)	0.12(3.0)
1/4	-U-FL4	1.61(40.9)	0.60(15.2)	0.56(14.3)	0.50(12.7)	0.19(4.8)
5/16	-U-FL5	1.69(42.9)	0.64(16.2)	0.63(15.9)	0.56(14.3)	0.25(6.4)
3/8	-U-FL6	1.77(45.0)	0.66(16.8)	0.69(17.5)	0.63(15.9)	0.28(7.1)
1/2	-U-FL8	2.02(51.3)	0.90(22.9)	0.87(22.2)	0.81(20.6)	0.41(10.4)
5/8	-U-FL10	2.05(52.1)	0.96(24.4)	1.00(25.4)	0.94(23.9)	0.50(12.7)
3/4	-U-FL12	2.11(53.6)	0.96(24.4)	1.13(28.6)	1.06(27.0)	0.62(15.7)
7/8	-U-FL14	2.19(55.7)	1.02(25.9)	1.25(31.8)	1.19(30.2)	0.72(18.3)
1	-U-FL16	2.55(64.8)	1.23(31.2)	1.5(38.1)	1.37(34.9)	0.88(22.4)
1 1/8	-U-FL18	3.47(88.2)	1.44(36.7)	1.75(44.5)	1.63(41.3)	0.97(24.6)
1 1/4	-U-FL20	3.63(92.2)	1.62(41.1)	1.87(47.6)	1.75(44.5)	1.09(27.7)
1 1/2	-U-FL24	4.25(108.0)	1.97(50.0)	2.25(57.2)	2.13(54.0)	1.34(34.0)

Unions

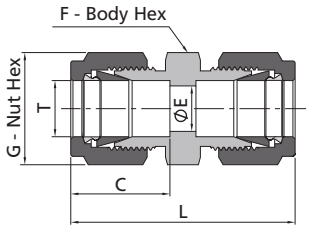

Metric Tube

T-Tube O.D. (mm)	Basic Ordering Number	Dimensions, mm (in.)				
		L	C	G	F	E
2	-U-ML2	35.6(1.40)	12.9(0.51)	12.0(0.47)	12.0(0.47)	1.7(0.07)
3	-U-ML3	35.3(1.39)	12.9(0.51)	12.0(0.47)	12.0(0.47)	2.4(0.09)
4	-U-ML4	37.3(1.47)	13.7(0.54)	12.0(0.47)	12.0(0.47)	2.4(0.09)
6	-U-ML6	41.0(1.61)	15.3(0.60)	14.0(0.55)	14.0(0.55)	4.8(0.19)
8	-U-ML8	43.2(1.70)	16.2(0.64)	16.0(0.63)	15.0(0.59)	6.4(0.25)
10	-U-ML10	46.2(1.82)	17.2(0.68)	19.0(0.75)	18.0(0.71)	7.9(0.31)
12	-U-ML12	51.2(2.02)	22.8(0.90)	22.0(0.87)	22.0(0.87)	9.5(0.37)
14	-U-ML14	52.0(2.05)	24.4(0.96)	25.0(0.98)	24.0(0.94)	11.1(0.44)
15	-U-ML15	52.0(2.05)	24.4(0.96)	25.0(0.98)	24.0(0.94)	11.9(0.47)
16	-U-ML16	52.0(2.05)	24.4(0.96)	25.0(0.98)	24.0(0.94)	12.7(0.50)
18	-U-ML18	53.5(2.11)	24.4(0.96)	30.0(1.18)	27.0(1.06)	15.1(0.59)
20	-U-ML20	55.0(2.17)	26.0(1.02)	32.0(1.26)	30.0(1.18)	15.9(0.63)
22	-U-ML22	55.0(2.17)	26.0(1.02)	32.0(1.26)	30.0(1.18)	18.3(0.72)
25	-U-ML25	65.0(2.56)	31.3(1.23)	38.0(1.50)	35.0(1.38)	21.8(0.86)
28	-U-ML28	85.0(3.35)	36.6(1.44)	46.0(1.81)	41.0(1.61)	21.8(0.86)
30	-U-ML30	92.7(3.65)	39.6(1.56)	50.0(1.97)	46.0(1.81)	26.2(1.03)
32	-U-ML32	97.3(3.83)	42.0(1.65)	50.0(1.97)	46.0(1.81)	28.6(1.13)
38	-U-ML38	113.6(4.47)	49.4(1.94)	60.0(2.36)	55.0(2.17)	33.7(1.33)

Conversion Unions

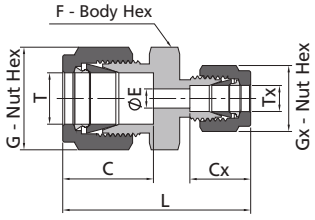

Fractional Tube

T-Tube O.D. (In.)	Tx-Tube O.D. (mm)	Basic Ordering Number	Dimensions, in. (mm)						
			L	C	G	F	E	Cx	Gx
1/8	3	-U-FL2-ML3	1.39(35.2)	0.50(12.7)	0.44(11.1)	0.47(12.0)	0.09(2.3)	0.51(12.9)	0.47(12.0)
1/4	4	-U-FL4-ML4	1.55(39.4)	0.60(15.2)	0.56(14.3)	0.55(14.0)	0.09(2.4)	0.54(13.7)	0.47(12.0)
1/4	6	-U-FL4-ML6	1.62(41.2)	0.60(15.2)	0.56(14.3)	0.55(14.0)	0.19(4.8)	0.60(15.3)	0.55(14.0)
3/8	6	-U-FL6-ML6	1.72(43.7)	0.66(16.8)	0.69(17.5)	0.63(16.0)	0.19(4.8)	0.60(15.3)	0.55(14.0)
3/8	8	-U-FL6-ML8	1.75(44.5)	0.66(16.8)	0.69(17.5)	0.63(16.0)	0.25(6.4)	0.64(16.2)	0.63(16.0)
1/2	6	-U-FL8-ML6	1.88(47.7)	0.90(22.9)	0.87(22.2)	0.87(22.0)	0.19(4.8)	0.60(15.3)	0.55(14.0)
1/2	10	-U-FL8-ML10	1.93(48.9)	0.90(22.9)	0.87(22.2)	0.87(22.0)	0.31(7.9)	0.68(17.2)	0.75(19.0)
1/2	12	-U-FL8-ML12	2.02(51.4)	0.90(22.9)	0.87(22.2)	0.87(22.0)	0.37(9.5)	0.90(22.8)	0.87(22.0)
3/4	12	-U-FL12-ML12	2.13(54.2)	0.96(24.4)	1.13(28.6)	1.06(27.0)	0.37(9.5)	0.90(22.8)	0.87(22.0)
3/4	16	-U-FL12-ML16	2.12(53.9)	0.96(24.4)	1.13(28.6)	1.06(27.0)	0.50(12.7)	0.96(24.4)	0.98(25.0)
3/4	18	-U-FL12-ML18	2.11(53.6)	0.96(24.4)	1.13(28.6)	1.06(27.0)	0.59(15.1)	0.96(24.4)	1.18(30.0)
1	25	-U-FL16-ML25	2.65(67.4)	1.23(31.2)	1.50(38.1)	1.38(35.0)	0.86(21.8)	1.23(31.3)	1.50(38.0)

Metric Tube **Fractional Tube**

T-Tube O.D. (mm)	Tx-Tube O.D. (in.)	Basic Ordering Number	Dimensions, mm (in.)						
			L	C	G	F	E	Cx	Gx
4	1/8	-U-ML4-FL2	36.5(1.44)	13.7(0.54)	12.0(0.47)	12.0(0.47)	2.4(0.09)	12.7(0.50)	11.1(0.44)
6	1/8	-U-ML6-FL2	38.5(1.52)	15.3(0.60)	14.0(0.55)	14.0(0.55)	2.4(0.09)	12.7(0.50)	11.1(0.44)
8	1/4	-U-ML8-FL4	42.3(1.67)	16.2(0.64)	16.0(0.63)	15.0(0.59)	4.8(0.19)	15.2(0.60)	14.3(0.56)
10	1/8	-U-ML10-FL2	41.8(1.65)	17.2(0.68)	19.0(0.75)	18.0(0.71)	2.4(0.09)	12.7(0.50)	11.1(0.44)
10	1/4	-U-ML10-FL4	44.5(1.75)	17.2(0.68)	19.0(0.75)	18.0(0.71)	4.8(0.19)	15.2(0.60)	14.3(0.56)
10	5/16	-U-ML10-FL5	45.1(1.78)	17.2(0.68)	19.0(0.75)	18.0(0.71)	6.4(0.25)	16.2(0.64)	15.9(0.63)
10	3/8	-U-ML10-FL6	45.9(1.81)	17.2(0.68)	19.0(0.75)	18.0(0.71)	7.1(0.28)	16.8(0.66)	17.5(0.69)
12	5/16	-U-ML12-FL5	47.8(1.88)	22.8(0.90)	22.0(0.87)	22.0(0.87)	6.4(0.25)	16.2(0.64)	15.9(0.63)
12	3/8	-U-ML12-FL6	48.4(1.91)	22.8(0.90)	22.0(0.87)	22.0(0.87)	7.1(0.28)	16.8(0.66)	17.5(0.69)
15	1/2	-U-ML15-FL8	52.0(2.05)	24.4(0.96)	25.0(0.98)	24.0(0.94)	10.4(0.41)	22.9(0.90)	22.2(0.87)
16	5/8	-U-ML16-FL10	52.0(2.05)	24.4(0.96)	25.0(0.98)	24.0(0.94)	12.7(0.50)	24.4(0.96)	25.4(1.00)
20	1/2	-U-ML20-FL8	55.0(2.17)	26.0(1.02)	32.0(1.26)	30.0(1.18)	10.4(0.41)	22.9(0.90)	22.2(0.87)

Reducing Unions

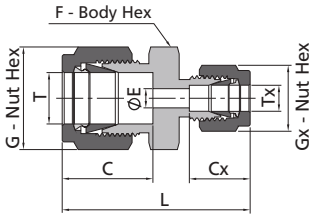

Fractional Tube

T-Tube O.D. (in.)	Tx-Tube O.D. (in.)	Basic Ordering Number	Dimensions, in. (mm)						
			L	C	G	F	E	Cx	Gx
1/8	1/16	-U-FL2-FL1	1.22(31.0)	0.50(12.7)	0.44(11.1)	0.44(11.1)	0.05(1.3)	0.34(8.6)	0.31(7.9)
3/16	1/16	-U-FL3-FL1	1.27(32.3)	0.54(13.7)	0.50(12.7)	0.44(11.1)	0.05(1.3)	0.34(8.6)	0.31(7.9)
3/16	1/8	-U-FL3-FL2	1.44(36.6)	0.54(13.7)	0.50(12.7)	0.44(11.1)	0.09(2.3)	0.50(12.7)	0.44(11.1)
1/4	1/16	-U-FL4-FL1	1.35(34.3)	0.60(15.2)	0.56(14.3)	0.50(12.7)	0.05(1.3)	0.34(8.6)	0.31(7.9)
1/4	1/8	-U-FL4-FL2	1.52(38.6)	0.60(15.2)	0.56(14.3)	0.50(12.7)	0.09(2.3)	0.50(12.7)	0.44(11.1)
1/4	3/16	-U-FL4-FL3	1.55(39.4)	0.60(15.2)	0.56(14.3)	0.50(12.7)	0.12(3.0)	0.54(13.7)	0.50(12.7)
5/16	1/8	-U-FL5-FL2	1.56(39.6)	0.64(16.2)	0.63(15.9)	0.56(14.3)	0.09(2.3)	0.50(12.7)	0.44(11.1)
5/16	1/4	-U-FL5-FL4	1.66(42.2)	0.64(16.2)	0.63(15.9)	0.56(14.3)	0.19(4.8)	0.60(15.2)	0.56(14.3)
3/8	1/16	-U-FL6-FL1	1.44(36.6)	0.66(16.8)	0.69(17.5)	0.63(15.9)	0.05(1.3)	0.34(8.6)	0.31(7.9)
3/8	1/8	-U-FL6-FL2	1.61(40.9)	0.66(16.8)	0.69(17.5)	0.63(15.9)	0.09(2.3)	0.50(12.7)	0.44(11.1)
3/8	1/4	-U-FL6-FL4	1.70(43.2)	0.66(16.8)	0.69(17.5)	0.63(15.9)	0.19(4.8)	0.60(15.2)	0.56(14.3)
3/8	5/16	-U-FL6-FL5	1.74(44.2)	0.66(16.8)	0.69(17.5)	0.63(15.9)	0.25(6.4)	0.64(16.2)	0.63(15.9)
1/2	1/8	-U-FL8-FL2	1.78(45.2)	0.90(22.8)	0.87(22.2)	0.81(20.6)	0.09(2.3)	0.50(12.7)	0.44(11.1)
1/2	1/4	-U-FL8-FL4	1.85(47.0)	0.90(22.8)	0.87(22.2)	0.81(20.6)	0.19(4.8)	0.60(15.2)	0.56(14.3)
1/2	3/8	-U-FL8-FL6	1.91(48.5)	0.90(22.8)	0.87(22.2)	0.81(20.6)	0.28(7.1)	0.66(16.8)	0.69(17.5)
5/8	3/8	-U-FL10-FL6	1.94(49.3)	0.96(24.4)	1.00(25.4)	0.94(23.9)	0.28(7.1)	0.66(16.8)	0.69(17.5)
5/8	1/2	-U-FL10-FL8	2.05(52.1)	0.96(24.4)	1.00(25.4)	0.94(23.9)	0.41(10.4)	0.90(22.8)	0.87(22.2)
3/4	1/4	-U-FL12-FL4	1.94(49.3)	0.96(24.4)	1.13(28.6)	1.06(27.0)	0.19(4.8)	0.60(15.2)	0.56(14.3)
3/4	3/8	-U-FL12-FL6	2.00(50.8)	0.96(24.4)	1.13(28.6)	1.06(27.0)	0.28(7.1)	0.66(16.8)	0.69(17.5)
3/4	1/2	-U-FL12-FL8	2.11(53.6)	0.96(24.4)	1.13(28.6)	1.06(27.0)	0.41(10.4)	0.90(22.8)	0.87(22.2)
3/4	5/8	-U-FL12-FL10	2.11(53.6)	0.96(24.4)	1.13(28.6)	1.06(27.0)	0.50(12.7)	0.96(24.4)	1.00(25.4)
1	1/2	-U-FL16-FL8	2.38(60.5)	1.23(31.2)	1.50(38.1)	1.37(34.9)	0.41(10.4)	0.90(22.8)	0.87(22.2)
1	3/4	-U-FL16-FL12	2.38(60.5)	1.23(31.2)	1.50(38.1)	1.37(34.9)	0.62(15.7)	0.96(24.4)	1.13(28.6)

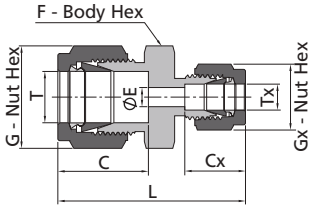

Metric Tube

T-Tube O.D. (mm)	Tx-Tube O.D. (mm)	Basic Ordering Number	Dimensions, mm (in.)						
			L	C	G	F	E	Cx	Gx
3	2	-U-ML3-ML2	35.3(1.39)	12.9(0.51)	12.0(0.47)	12.0(0.47)	1.7(0.07)	12.9(0.51)	12.0(0.47)
6	2	-U-ML6-ML2	38.6(1.52)	15.3(0.60)	14.0(0.55)	14.0(0.55)	1.7(0.07)	12.9(0.51)	12.0(0.47)
6	3	-U-ML6-ML3	38.6(1.52)	15.3(0.60)	14.0(0.55)	14.0(0.55)	2.4(0.09)	12.9(0.51)	12.0(0.47)
6	4	-U-ML6-ML4	39.4(1.55)	15.3(0.60)	14.0(0.55)	14.0(0.55)	2.4(0.09)	13.7(0.54)	12.0(0.47)
8	6	-U-ML8-ML6	42.3(1.67)	16.3(0.64)	16.0(0.63)	15.0(0.59)	4.8(0.19)	15.3(0.60)	14.0(0.55)
10	6	-U-ML10-ML6	44.5(1.75)	17.2(0.68)	19.0(0.75)	18.0(0.71)	4.8(0.19)	15.3(0.60)	14.0(0.55)
10	8	-U-ML10-ML8	45.1(1.78)	17.2(0.68)	19.0(0.75)	18.0(0.71)	6.4(0.25)	16.3(0.64)	16.0(0.63)
12	6	-U-ML12-ML6	47.0(1.85)	22.8(0.90)	22.0(0.87)	22.0(0.87)	4.8(0.19)	15.3(0.60)	14.0(0.55)
12	8	-U-ML12-ML8	47.8(1.88)	22.8(0.90)	22.0(0.87)	22.0(0.87)	6.4(0.25)	16.3(0.64)	16.0(0.63)
12	10	-U-ML12-ML10	48.7(1.92)	22.8(0.90)	22.0(0.87)	22.0(0.87)	7.9(0.31)	17.2(0.68)	19.0(0.75)
16	10	-U-ML16-ML10	49.5(1.95)	24.4(0.96)	25.0(0.98)	24.0(0.94)	7.9(0.31)	17.2(0.68)	19.0(0.75)
16	12	-U-ML16-ML12	52.0(2.05)	24.4(0.96)	25.0(0.98)	24.0(0.94)	9.5(0.37)	22.8(0.90)	22.0(0.87)
18	12	-U-ML18-ML12	53.5(2.11)	24.4(0.96)	30.0(1.18)	27.0(1.06)	9.5(0.37)	22.8(0.90)	22.0(0.87)
25	18	-U-ML25-ML18	61.0(2.40)	31.3(1.23)	38.0(1.50)	35.0(1.38)	15.1(0.59)	24.4(0.96)	30.0(1.18)
25	20	-U-ML25-ML20	62.3(2.45)	31.3(1.23)	38.0(1.50)	35.0(1.38)	15.9(0.63)	26.0(1.02)	32.0(1.26)
30	18	-U-ML30-ML18	75.4(2.97)	39.6(1.56)	50.0(1.97)	46.0(1.81)	15.1(0.59)	24.4(0.96)	30.0(0.47)
30	20	-U-ML30-ML20	75.4(2.97)	39.6(1.56)	50.0(1.97)	46.0(1.81)	15.9(0.63)	26.0(1.02)	32.0(1.26)
30	25	-U-ML30-ML25	80.1(3.15)	39.6(1.56)	50.0(1.97)	46.0(1.81)	21.8(0.86)	31.3(1.23)	38.0(1.50)
32	18	-U-ML32-ML18	77.8(3.06)	42.0(1.65)	50.0(1.97)	46.0(1.81)	15.1(0.59)	24.4(0.96)	30.0(1.18)
32	20	-U-ML32-ML20	77.8(3.06)	42.0(1.65)	50.0(1.97)	46.0(1.81)	15.9(0.63)	26.0(1.02)	32.0(1.26)
32	25	-U-ML32-ML25	82.3(3.24)	42.0(1.65)	50.0(1.97)	46.0(1.81)	21.8(0.86)	31.3(1.23)	38.0(1.50)
38	20	-U-ML38-ML20	87.5(3.44)	49.4(1.94)	60.0(2.36)	55.0(2.17)	15.9(0.63)	26.0(1.02)	32.0(1.26)
38	25	-U-ML38-ML25	92.0(3.62)	49.4(1.94)	60.0(2.36)	55.0(2.17)	21.8(0.86)	31.3(1.23)	38.0(1.50)
38	30	-U-ML38-ML30	104.6(4.12)	49.4(1.94)	60.0(2.36)	55.0(2.17)	26.2(1.03)	39.6(1.56)	50.0(1.97)

Bulkhead Unions

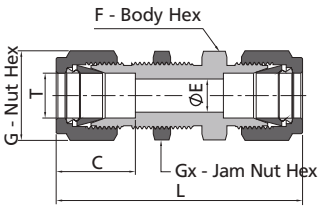

Fractional Tube

Tx-Tube O.D. (in.)	Basic Ordering Number	Dimensions, in. (mm)						Panel Hole Size in. (mm)	Max. Panel Thickness in. (mm)
		L	C	E	G	F	Gx		
1/16	-BU-FL1	1.24(31.5)	0.34(8.6)	0.05(1.3)	0.31(7.9)	0.31(7.9)	0.31(7.9)	0.20(5.2)	0.12(3.0)
1/8	-BU-FL2	2.02(51.3)	0.50(12.7)	0.09(2.3)	0.44(11.1)	0.50(12.7)	0.50(12.7)	0.33(8.3)	0.50(12.7)
3/16	-BU-FL3	2.11(53.6)	0.54(13.7)	0.12(3.0)	0.50(12.7)	0.56(14.3)	0.56(14.3)	0.39(9.9)	0.50(12.7)
1/4	-BU-FL4	2.27(57.7)	0.60(15.2)	0.19(4.8)	0.56(14.3)	0.63(15.9)	0.63(15.9)	0.45(11.5)	0.40(10.2)
5/16	-BU-FL5	2.39(60.7)	0.64(16.3)	0.25(6.4)	0.63(15.9)	0.69(17.5)	0.69(17.5)	0.52(13.1)	0.44(11.2)
3/8	-BU-FL6	2.45(62.2)	0.66(16.8)	0.28(7.1)	0.69(17.5)	0.75(19.1)	0.75(19.1)	0.58(14.7)	0.44(11.2)
1/2	-BU-FL8	2.80(71.1)	0.90(22.9)	0.41(10.4)	0.87(22.2)	0.94(23.8)	0.94(23.8)	0.76(19.4)	0.50(12.7)
5/8	-BU-FL10	2.86(72.6)	0.96(24.4)	0.50(12.7)	1.00(25.4)	1.06(27.0)	1.06(27.0)	0.89(22.6)	0.50(12.7)
3/4	-BU-FL12	3.11(79.0)	0.96(24.4)	0.62(15.7)	1.13(28.6)	1.19(30.2)	1.19(30.2)	1.02(25.8)	0.66(16.8)
7/8	-BU-FL14	3.35(85.2)	1.02(25.9)	0.72(18.3)	1.25(31.8)	1.38(34.9)	1.37(34.9)	1.14(29.0)	0.75(19.1)
1	-BU-FL16	3.77(95.8)	1.23(31.2)	0.88(22.4)	1.50(38.1)	1.63(41.3)	1.63(41.3)	1.33(33.7)	0.75(19.1)
1 1/4	-BU-FL20	4.85(123.2)	1.62(41.1)	1.09(27.8)	1.87(47.6)	1.87(47.6)	1.87(47.6)	1.64(41.7)	0.75(19.1)
1 1/2	-BU-FL24	5.48(139.2)	1.97(50.0)	1.34(34.0)	2.25(57.2)	2.25(57.2)	2.25(57.2)	1.95(49.6)	0.75(19.1)

Metric Tube

Tx-Tube O.D. (mm)	Basic Ordering Number	Dimensions, mm (in.)						Panel Hole Size mm (in.)	Max. Panel Thickness mm (in.)
		L	C	E	G	F	Gx		
3	-BU-ML3	51.3(2.02)	12.9(0.51)	2.4(0.09)	12.0(0.47)	14.0(0.55)	14.0(0.55)	8.3(0.33)	12.7(0.50)
4	-BU-ML4	53.6(2.11)	13.7(0.54)	2.4(0.09)	12.0(0.47)	14.0(0.55)	14.0(0.55)	9.9(0.39)	12.7(0.50)
6	-BU-ML6	57.7(2.27)	15.3(0.60)	4.8(0.19)	14.0(0.55)	16.0(0.63)	16.0(0.63)	11.5(0.45)	10.2(0.40)
8	-BU-ML8	61.0(2.40)	16.2(0.64)	6.4(0.25)	16.0(0.63)	18.0(0.71)	18.0(0.71)	13.1(0.52)	11.2(0.44)
10	-BU-ML10	63.7(2.51)	17.2(0.68)	7.9(0.31)	19.0(0.75)	22.0(0.87)	22.0(0.87)	16.3(0.64)	11.2(0.44)
12	-BU-ML12	71.0(2.80)	22.8(0.90)	9.5(0.37)	22.0(0.87)	24.0(0.94)	24.0(0.94)	19.5(0.77)	12.7(0.50)
14	-BU-ML14	72.5(2.85)	24.4(0.96)	11.1(0.44)	25.0(0.98)	27.0(1.06)	27.0(1.06)	22.5(0.89)	12.7(0.50)
15	-BU-ML15	72.5(2.85)	24.4(0.96)	11.9(0.47)	25.0(0.98)	27.0(1.06)	27.0(1.06)	22.8(0.90)	12.7(0.50)
16	-BU-ML16	72.5(2.85)	24.4(0.96)	12.7(0.50)	25.0(0.98)	27.0(1.06)	27.0(1.06)	22.8(0.90)	12.7(0.50)
18	-BU-ML18	78.9(3.11)	24.4(0.96)	15.1(0.59)	30.0(1.18)	30.0(1.18)	30.0(1.18)	26.0(1.02)	16.8(0.66)
20	-BU-ML20	84.5(3.33)	26.0(1.02)	15.9(0.63)	32.0(1.26)	35.0(1.38)	35.0(1.38)	29.0(1.14)	19.0(0.75)
25	-BU-ML25	96.0(3.78)	31.3(1.23)	21.8(0.86)	38.0(1.5)	41.0(1.61)	41.0(1.61)	34.0(1.34)	19.0(0.75)
30	-BU-ML30	124.0(4.88)	39.6(1.56)	26.2(1.03)	50.0(1.97)	50.0(1.97)	50.0(1.97)	40.5(1.59)	19.0(0.75)
32	-BU-ML32	128.0(5.04)	42.0(1.65)	28.6(1.13)	50.0(1.97)	50.0(1.97)	50.0(1.97)	42.5(1.67)	19.0(0.75)
38	-BU-ML38	145.0(5.71)	49.4(1.94)	33.7(1.33)	60.0(2.36)	60.0(2.36)	60.0(2.36)	50.5(1.99)	19.0(0.75)

Bulkhead Reducing Unions

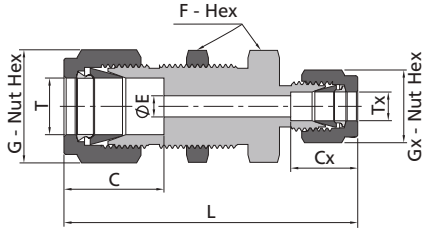

Fractional Tube

T-Tube O.D. (in.)	Tx-Tube O.D. (in.)	Basic Ordering Number	Dimensions, in. (mm)							Panel Hole Size in. (mm)	Max. Panel Thickness in. (mm)
			L	C	E	G	F	Cx	Gx		
1/4	1/8	-BU-FL4-FL2	2.17(55.1)	0.60(15.2)	0.09(2.3)	0.56(14.3)	0.63(15.9)	0.50(12.7)	0.44(11.1)	0.45(11.5)	0.40(10.2)
3/8	1/4	-BU-FL6-FL4	2.39(60.7)	0.66(16.8)	0.19(4.8)	0.69(17.5)	0.75(19.1)	0.60(15.2)	0.56(14.3)	0.58(14.7)	0.44(11.2)
1/2	1/4	-BU-FL8-FL4	2.63(66.8)	0.90(22.9)	0.19(4.8)	0.87(22.2)	0.94(23.8)	0.60(15.2)	0.56(14.3)	0.76(19.4)	0.50(12.7)

Bulkhead Reducing Unions

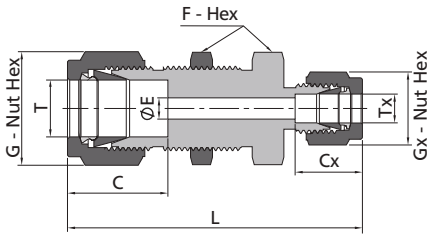

Metric Tube

T-Tube O.D. (mm)	Tx-Tube O.D. (mm)	Basic Ordering Number	Dimensions, mm (in.)							Panel Hole Size mm (in.)	Max. Panel Thickness mm (in.)
			L	C	E	G	F	Cx	Gx		
6	3	-BU-ML6-ML3	55.1(2.17)	15.3(0.60)	2.4(0.09)	14.0(0.55)	16.0(0.63)	12.9(0.51)	12.0(0.47)	11.5(0.45)	10.2(0.40)
8	6	-BU-ML8-ML6	60.1(2.37)	16.2(0.64)	4.8(0.19)	16.0(0.63)	18.0(0.71)	15.3(0.60)	14.0(0.55)	13.1(0.52)	11.2(0.44)
12	8	-BU-ML12-ML8	67.6(2.66)	22.8(0.90)	6.4(0.25)	22.0(0.87)	24.0(0.94)	16.2(0.64)	16.0(0.63)	19.5(0.77)	12.7(0.50)

Bulkhead Conversion Unions

Fractional Tube — **Metric Tube**

T-Tube O.D. (in.)	Tx-Tube O.D. (mm)	Basic Ordering Number	Dimensions, in. (mm)							Panel Hole Size in. (mm)	Max. Panel Thickness in. (mm)
			L	C	E	G	F	Cx	Gx		
1/4	6	-BU-FL4-ML6	2.27(57.7)	0.60(15.2)	0.19(4.8)	0.56(14.3)	0.63(15.9)	0.60(15.3)	0.55(14.0)	0.45(11.5)	0.40(10.2)

Metric Tube — **Fractional Tube**

T-Tube O.D. (mm)	Tx-Tube O.D. (in.)	Basic Ordering Number	Dimensions, mm (in.)							Panel Hole Size mm (in.)	Max. Panel Thickness mm (in.)
			L	C	E	G	F	Cx	Gx		
6	1/8	-BU-ML6-FL2	55.1(2.17)	15.3(0.60)	2.3(0.09)	14.0(0.55)	16.0(0.63)	12.7(0.5)	11.0(0.43)	11.5(0.45)	10.2(0.40)
6	1/4	-BU-ML6-FL4	57.7(2.27)	15.3(0.60)	4.8(0.19)	14.0(0.55)	16.0(0.63)	15.2(0.6)	14.3(0.56)	11.5(0.45)	10.2(0.40)

Weld Bulkhead Unions

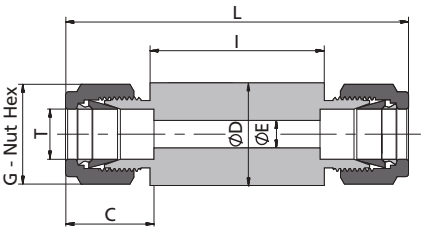

Fractional Tube

Tx-Tube O.D. (in.)	Basic Ordering Number	Dimensions, in. (mm)					
		L	C	E	G	D	I
1/8	-BU-FL2-OD12	3.16(80.2)	0.50(12.7)	0.09(2.3)	0.44(11.1)	0.47(12.0)	1.97(50.0)
3/16	-BU-FL3-OD12	3.24(82.2)	0.54(13.7)	0.12(3.0)	0.50(12.7)	0.47(12.0)	1.97(50.0)
1/4	-BU-FL4-OD14	3.35(85.2)	0.60(15.2)	0.19(4.8)	0.56(14.3)	0.55(14.0)	1.97(50.0)
5/16	-BU-FL5-OD16	3.43(87.2)	0.64(16.2)	0.25(6.4)	0.63(15.9)	0.63(16.0)	1.97(50.0)
3/8	-BU-FL6-OD19	3.49(88.6)	0.66(16.8)	0.28(7.1)	0.69(17.5)	0.75(19.0)	1.97(50.0)
1/2	-BU-FL8-OD23	3.69(93.8)	0.90(22.9)	0.41(10.4)	0.87(22.2)	0.91(23.0)	1.97(50.0)
5/8	-BU-FL10-OD28	3.69(93.6)	0.96(24.4)	0.50(12.7)	1.00(25.4)	1.10(28.0)	1.97(50.0)
3/4	-BU-FL12-OD32	3.72(94.4)	0.96(24.4)	0.62(15.7)	1.13(28.6)	1.26(32.0)	1.97(50.0)
7/8	-BU-FL14-OD32	3.72(94.4)	1.02(25.9)	0.72(18.3)	1.25(31.8)	1.26(32.0)	1.97(50.0)
1	-BU-FL16-OD35	4.06(103.2)	1.23(31.2)	0.88(22.4)	1.50(38.1)	1.38(35.0)	1.97(50.0)
1-1/4	-BU-FL20-OD50	5.05(128.2)	1.62(41.1)	1.09(27.7)	1.87(47.6)	1.97(50.0)	1.97(50.0)
1-1/2	-BU-FL24-OD55	5.54(140.8)	1.97(50.0)	1.34(34.0)	2.25(57.2)	2.17(55.0)	1.97(50.0)
2	-BU-FL32-OD80	6.93(176.0)	2.67(67.8)	1.81(46.0)	3.00(76.2)	3.15(80.0)	1.97(50.0)

Metric Tube

Tx-Tube O.D. (mm)	Basic Ordering Number	Dimensions, mm (in.)					
		L	C	E	G	D	I
3	-BU-ML3-OD12	80.8(3.18)	12.9(0.51)	2.4(0.09)	12.0(0.47)	12.0(0.47)	50.0(1.97)
4	-BU-ML4-OD12	82.4(3.24)	13.7(0.54)	2.4(0.09)	12.0(0.47)	12.0(0.47)	50.0(1.97)
6	-BU-ML6-OD12	86.0(3.39)	15.3(0.60)	4.8(0.19)	14.0(0.55)	12.0(0.47)	50.0(1.97)
8	-BU-ML8-OD16	87.4(3.44)	16.2(0.64)	6.4(0.25)	16.0(0.63)	16.0(0.63)	50.0(1.97)
10	-BU-ML10-OD19	89.0(3.50)	17.2(0.68)	7.9(0.31)	19.0(0.75)	19.0(0.75)	50.0(1.97)
12	-BU-ML12-OD23	94.2(3.71)	22.8(0.90)	9.5(0.37)	22.0(0.87)	23.0(0.91)	50.0(1.97)
15	-BU-ML15-OD25	93.8(3.69)	24.4(0.96)	11.9(0.47)	25.0(0.98)	25.0(0.98)	50.0(1.97)
16	-BU-ML16-OD28	94.4(3.72)	24.4(0.96)	12.7(0.50)	25.0(0.98)	28.0(1.10)	50.0(1.97)
18	-BU-ML18-OD28	94.0(3.70)	24.4(0.96)	15.1(0.59)	30.0(1.18)	28.0(1.10)	50.0(1.97)
20	-BU-ML20-OD32	94.0(3.70)	26.0(1.02)	15.9(0.63)	32.0(1.26)	32.0(1.26)	50.0(1.97)
22	-BU-ML22-OD32	94.0(3.70)	26.0(1.02)	18.3(0.72)	32.0(1.26)	32.0(1.26)	50.0(1.97)
25	-BU-ML25-OD38	103.2(4.06)	31.3(1.23)	21.8(0.86)	38.0(1.50)	38.0(1.50)	50.0(1.97)
28	-BU-ML28-OD45	123.2(4.85)	36.6(1.44)	21.8(0.86)	46.0(1.81)	45.0(1.77)	50.0(1.97)
32	-BU-ML32-OD50	133.2(5.24)	42.0(1.65)	28.6(1.13)	50.0(1.97)	50.0(1.97)	50.0(1.97)
38	-BU-ML38-OD60	146.2(5.76)	49.4(1.94)	33.7(1.33)	60.0(2.36)	60.0(2.36)	50.0(1.97)

For specified length, add "-**" (metric length) as a suffix to the basic ordering number.
Example: SS-BU-ML12-OD23-100

Bulkhead Locknuts



Fractional Tube

T-Tube O.D. (in.)	Basic Ordering Number
1/16	-BN-FL1
1/8	-BN-FL2
3/16	-BN-FL3
1/4	-BN-FL4
5/16	-BN-FL5
3/8	-BN-FL6
1/2	-BN-FL8
5/8	-BN-FL10
3/4	-BN-FL12
7/8	-BN-FL14
1	-BN-FL16
1 1/4	-BN-FL20
1 1/2	-BN-FL24

Metric Tube

T-Tube O.D. (mm)	Basic Ordering Number
3	-BN-ML3
4	-BN-ML4
6	-BN-ML6
8	-BN-ML8
10	-BN-ML10
12	-BN-ML12
14	-BN-ML14
18	-BN-ML18
20	-BN-ML20
22	-BN-ML22
25	-BN-ML25
28	-BN-ML28
30	-BN-ML30
32	-BN-ML32
38	-BN-ML38

FITOK

Male Elbows

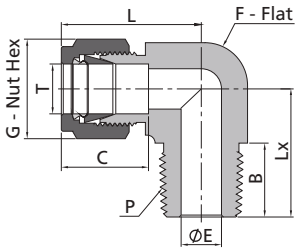

The E dimension refers to the smallest nominal orifice. It might be larger at tapered thread end, straight thread end.

Fractional Tube — **NPT Thread**

T-Tube O.D. (in.)	P-NPT Size	Basic Ordering Number	Dimensions, in. (mm)						
			L	C	G	F	E	B	Lx
1/16	1/16	-LM-FL1-NS1	0.75(19.1)	0.34(8.6)	0.31(7.9)	0.44(11.1)	0.05(1.3)	0.38(9.7)	0.70(17.8)
1/16	1/8	-LM-FL1-NS2	0.75(19.1)	0.34(8.6)	0.31(7.9)	0.44(11.1)	0.05(1.3)	0.38(9.7)	0.70(17.8)
1/8	1/16	-LM-FL2-NS1	0.93(23.6)	0.50(12.7)	0.44(11.1)	0.44(11.1)	0.09(2.4)	0.38(9.7)	0.70(17.8)
1/8	1/8	-LM-FL2-NS2	0.93(23.6)	0.50(12.7)	0.44(11.1)	0.44(11.1)	0.09(2.4)	0.38(9.7)	0.70(17.8)
1/8	1/4	-LM-FL2-NS4	0.97(24.6)	0.50(12.7)	0.44(11.1)	0.50(12.7)	0.09(2.4)	0.56(14.2)	0.92(23.4)
3/16	1/8	-LM-FL3-NS2	1.00(25.4)	0.54(13.7)	0.50(12.7)	0.50(12.7)	0.12(3.0)	0.38(9.7)	0.74(18.8)
3/16	1/4	-LM-FL3-NS4	1.00(25.4)	0.54(13.7)	0.50(12.7)	0.50(12.7)	0.12(3.0)	0.56(14.2)	0.92(23.4)
1/4	1/16	-LM-FL4-NS1	1.06(26.9)	0.60(15.2)	0.56(14.3)	0.50(12.7)	0.12(3.0)	0.38(9.7)	0.74(18.8)
1/4	1/8	-LM-FL4-NS2	1.06(26.9)	0.60(15.2)	0.56(14.3)	0.50(12.7)	0.19(4.8)	0.38(9.7)	0.74(18.8)
1/4	1/4	-LM-FL4-NS4	1.06(26.9)	0.60(15.2)	0.56(14.3)	0.50(12.7)	0.19(4.8)	0.56(14.2)	0.92(23.4)
1/4	3/8	-LM-FL4-NS6	1.17(29.7)	0.60(15.2)	0.56(14.3)	0.69(17.5)	0.19(4.8)	0.56(14.2)	1.03(26.2)
1/4	1/2	-LM-FL4-NS8	1.25(31.8)	0.60(15.2)	0.56(14.3)	0.81(20.6)	0.19(4.8)	0.75(19.1)	1.30(33.0)
5/16	1/8	-LM-FL5-NS2	1.13(28.7)	0.64(16.3)	0.63(15.9)	0.56(14.3)	0.19(4.8)	0.38(9.7)	0.78(19.8)
5/16	1/4	-LM-FL5-NS4	1.13(28.7)	0.64(16.3)	0.63(15.9)	0.56(14.3)	0.25(6.4)	0.56(14.2)	0.96(24.4)
5/16	3/8	-LM-FL5-NS6	1.20(30.5)	0.64(16.3)	0.63(15.9)	0.69(17.5)	0.25(6.4)	0.56(14.2)	1.03(26.2)
3/8	1/8	-LM-FL6-NS2	1.20(30.5)	0.66(16.8)	0.69(17.5)	0.63(15.9)	0.19(4.8)	0.38(9.7)	0.82(20.8)
3/8	1/4	-LM-FL6-NS4	1.20(30.5)	0.66(16.8)	0.69(17.5)	0.63(15.9)	0.28(7.1)	0.56(14.2)	1.00(25.4)
3/8	3/8	-LM-FL6-NS6	1.23(31.2)	0.66(16.8)	0.69(17.5)	0.69(17.5)	0.28(7.1)	0.56(14.2)	1.03(26.2)
3/8	1/2	-LM-FL6-NS8	1.31(33.3)	0.66(16.8)	0.69(17.5)	0.81(20.6)	0.28(7.1)	0.75(19.1)	1.30(33.0)
3/8	3/4	-LM-FL6-NS12	1.46(37.1)	0.66(16.8)	0.69(17.5)	1.06(27.0)	0.28(7.1)	0.75(19.1)	1.45(36.8)
1/2	1/4	-LM-FL8-NS4	1.42(36.1)	0.90(22.9)	0.87(22.2)	0.81(20.6)	0.28(7.1)	0.56(14.2)	1.11(28.2)
1/2	3/8	-LM-FL8-NS6	1.42(36.1)	0.90(22.9)	0.87(22.2)	0.81(20.6)	0.38(9.7)	0.56(14.2)	1.11(28.2)
1/2	1/2	-LM-FL8-NS8	1.42(36.1)	0.90(22.9)	0.87(22.2)	0.81(20.6)	0.41(10.4)	0.75(19.1)	1.30(33.0)
1/2	3/4	-LM-FL8-NS12	1.57(39.9)	0.90(22.9)	0.87(22.2)	1.06(27.0)	0.41(10.4)	0.75(19.1)	1.45(36.8)
5/8	3/8	-LM-FL10-NS6	1.50(38.1)	0.96(24.4)	1.00(25.4)	0.94(23.8)	0.38(9.7)	0.56(14.2)	1.19(30.2)
5/8	1/2	-LM-FL10-NS8	1.50(38.1)	0.96(24.4)	1.00(25.4)	0.94(23.8)	0.47(11.9)	0.75(19.1)	1.38(35.1)
5/8	3/4	-LM-FL10-NS12	1.57(39.9)	0.96(24.4)	1.00(25.4)	1.06(27.0)	0.50(12.7)	0.75(19.1)	1.45(36.8)
3/4	1/2	-LM-FL12-NS8	1.57(39.9)	0.96(24.4)	1.13(28.6)	1.06(27.0)	0.47(11.9)	0.75(19.1)	1.45(36.8)
3/4	3/4	-LM-FL12-NS12	1.57(39.9)	0.96(24.4)	1.13(28.6)	1.06(27.0)	0.62(15.7)	0.75(19.1)	1.45(36.8)
7/8	3/4	-LM-FL14-NS12	1.76(44.7)	1.02(25.9)	1.25(31.8)	1.37(34.9)	0.62(15.7)	0.75(19.1)	1.64(41.7)
1	3/4	-LM-FL16-NS12	1.93(49.0)	1.23(31.2)	1.50(38.1)	1.37(34.9)	0.62(15.7)	0.75(19.1)	1.64(41.7)
1	1	-LM-FL16-NS16	1.93(49.0)	1.23(31.2)	1.50(38.1)	1.37(34.9)	0.88(22.4)	0.94(23.9)	1.83(46.5)
1 1/4	1 1/4	-LM-FL20-NS20	2.62(66.5)	1.62(41.1)	1.87(47.6)	1.69(42.9)	1.09(27.7)	0.94(23.9)	2.06(52.4)
1 1/2	1 1/2	-LM-FL24-NS24	3.07(78.0)	1.97(50.0)	2.25(57.2)	2.00(50.8)	1.34(34.0)	1.03(26.2)	2.38(60.5)

Fractional Tube — **ISO Tapered Thread (RT)**

T-Tube O.D. (in.)	P-RT Size	Basic Ordering Number	Dimensions, in. (mm)						
			L	C	G	F	E	B	Lx
1/8	1/8	-LM-FL2-RT2	0.93(23.6)	0.50(12.7)	0.44(11.1)	0.44(11.1)	0.09(2.4)	0.38(9.7)	0.87(22.2)
1/8	1/4	-LM-FL2-RT4	0.97(24.6)	0.50(12.7)	0.44(11.1)	0.50(12.7)	0.09(2.4)	0.56(14.2)	0.92(23.4)
1/4	1/8	-LM-FL4-RT2	1.06(26.9)	0.60(15.2)	0.56(14.3)	0.50(12.7)	0.19(4.8)	0.38(9.7)	0.74(18.8)
1/4	1/4	-LM-FL4-RT4	1.06(26.9)	0.60(15.2)	0.56(14.3)	0.50(12.7)	0.19(4.8)	0.56(14.2)	0.92(23.4)
1/4	3/8	-LM-FL4-RT6	1.17(29.7)	0.60(15.2)	0.56(14.3)	0.69(17.5)	0.19(4.8)	0.56(14.2)	1.03(26.2)
1/4	1/2	-LM-FL4-RT8	1.25(31.8)	0.60(15.2)	0.56(14.3)	0.81(20.6)	0.19(4.8)	0.75(19.1)	1.30(33.0)
5/16	1/4	-LM-FL5-RT4	1.13(28.7)	0.64(16.3)	0.63(15.9)	0.56(14.3)	0.25(6.4)	0.56(14.2)	0.96(24.4)
3/8	1/8	-LM-FL6-RT2	1.20(30.5)	0.66(16.8)	0.69(17.5)	0.63(15.9)	0.19(4.8)	0.38(9.7)	0.82(20.8)
3/8	1/4	-LM-FL6-RT4	1.20(30.5)	0.66(16.8)	0.69(17.5)	0.63(15.9)	0.28(7.1)	0.56(14.2)	1.00(25.4)
3/8	3/8	-LM-FL6-RT6	1.23(31.2)	0.66(16.8)	0.69(17.5)	0.69(17.5)	0.28(7.1)	0.56(14.2)	1.03(26.2)
1/2	3/8	-LM-FL8-RT6	1.42(36.1)	0.90(22.9)	0.87(22.2)	0.81(20.6)	0.38(9.7)	0.56(14.2)	1.11(28.2)
1/2	1/2	-LM-FL8-RT8	1.42(36.1)	0.90(22.9)	0.87(22.2)	0.81(20.6)	0.41(10.4)	0.75(19.1)	1.30(33.0)
3/4	1/2	-LM-FL12-RT8	1.57(39.9)	0.96(24.4)	1.13(28.6)	1.06(27.0)	0.37(9.5)	0.75(19.1)	1.45(36.8)
1	1	-LM-FL16-RT16	1.93(49.0)	1.23(31.2)	1.50(38.1)	1.37(34.9)	0.88(22.4)	0.94(23.9)	1.83(46.5)

Male Elbows

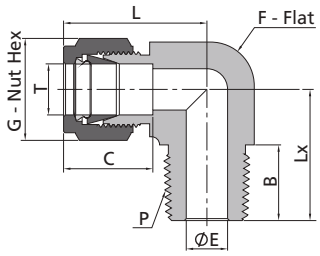

The E dimension refers to the smallest nominal orifice. It might be larger at tapered thread end, straight thread end.

Metric Tube									NPT Thread
T-Tube O.D. (mm)	P-NPT Size	Basic Ordering Number	Dimensions, mm (in.)						
			L	C	G	F	E	B	Lx
3	1/8	-LM-ML3-NS2	23.6(0.93)	12.9(0.51)	12.0(0.47)	11.1(0.44)	2.4(0.09)	9.7(0.38)	17.8(0.70)
3	1/4	-LM-ML3-NS4	24.6(0.97)	12.9(0.51)	12.0(0.47)	12.7(0.50)	2.4(0.09)	14.2(0.56)	23.4(0.92)
4	1/8	-LM-ML4-NS2	25.4(1.00)	13.7(0.54)	12.0(0.47)	12.7(0.50)	2.4(0.09)	9.7(0.38)	18.8(0.74)
4	1/4	-LM-ML4-NS4	25.4(1.00)	13.7(0.54)	12.0(0.47)	12.7(0.50)	2.4(0.09)	14.2(0.56)	23.4(0.92)
6	1/8	-LM-ML6-NS2	27.0(1.06)	15.3(0.60)	14.0(0.55)	12.7(0.50)	4.8(0.19)	9.7(0.38)	18.8(0.74)
6	1/4	-LM-ML6-NS4	27.0(1.06)	15.3(0.60)	14.0(0.55)	12.7(0.50)	4.8(0.19)	14.2(0.56)	23.4(0.92)
6	3/8	-LM-ML6-NS6	29.8(1.17)	15.3(0.60)	14.0(0.55)	17.5(0.69)	4.8(0.19)	14.2(0.56)	26.2(1.03)
6	1/2	-LM-ML6-NS8	31.8(1.25)	15.3(0.60)	14.0(0.55)	20.6(0.81)	4.8(0.19)	19.1(0.75)	33.0(1.30)
8	1/8	-LM-ML8-NS2	28.8(1.13)	16.2(0.64)	16.0(0.63)	14.3(0.56)	4.8(0.19)	9.7(0.38)	19.8(0.78)
8	1/4	-LM-ML8-NS4	28.8(1.13)	16.2(0.64)	16.0(0.63)	14.3(0.56)	6.4(0.25)	14.2(0.56)	24.4(0.96)
8	3/8	-LM-ML8-NS6	30.6(1.20)	16.2(0.64)	16.0(0.63)	17.5(0.69)	6.4(0.25)	14.2(0.56)	26.2(1.03)
8	1/2	-LM-ML8-NS8	32.6(1.28)	16.2(0.64)	16.0(0.63)	20.6(0.81)	6.4(0.25)	19.1(0.75)	33.0(1.30)
10	1/8	-LM-ML10-NS2	31.5(1.24)	17.2(0.68)	19.0(0.75)	17.5(0.69)	4.8(0.19)	9.7(0.38)	21.6(0.85)
10	1/4	-LM-ML10-NS4	31.5(1.24)	17.2(0.68)	19.0(0.75)	17.5(0.69)	7.1(0.28)	14.2(0.56)	26.2(1.03)
10	3/8	-LM-ML10-NS6	31.5(1.24)	17.2(0.68)	19.0(0.75)	17.5(0.69)	7.9(0.31)	14.2(0.56)	26.2(1.03)
10	1/2	-LM-ML10-NS8	33.5(1.32)	17.2(0.68)	19.0(0.75)	20.6(0.81)	7.9(0.31)	19.1(0.75)	33.0(1.30)
12	1/8	-LM-ML12-NS2	36.0(1.42)	22.8(0.90)	22.0(0.87)	20.6(0.81)	4.8(0.19)	9.7(0.38)	23.6(0.93)
12	1/4	-LM-ML12-NS4	36.0(1.42)	22.8(0.90)	22.0(0.87)	20.6(0.81)	7.1(0.28)	14.2(0.56)	28.2(1.11)
12	3/8	-LM-ML12-NS6	36.0(1.42)	22.8(0.90)	22.0(0.87)	20.6(0.81)	9.5(0.37)	14.2(0.56)	28.2(1.11)
12	1/2	-LM-ML12-NS8	36.0(1.42)	22.8(0.90)	22.0(0.87)	20.6(0.81)	9.5(0.37)	19.1(0.75)	33.0(1.30)
12	3/4	-LM-ML12-NS12	39.8(1.57)	22.8(0.90)	22.0(0.87)	27.0(1.06)	9.5(0.37)	19.1(0.75)	36.8(1.45)
15	1/2	-LM-ML15-NS8	38.0(1.50)	24.4(0.96)	25.0(0.98)	23.8(0.94)	11.9(0.47)	19.1(0.75)	35.1(1.38)
16	1/4	-LM-ML16-NS4	38.0(1.50)	24.4(0.96)	25.0(0.98)	23.8(0.94)	7.1(0.28)	14.2(0.56)	30.2(1.19)
16	3/8	-LM-ML16-NS6	38.0(1.50)	24.4(0.96)	25.0(0.98)	23.8(0.94)	9.5(0.37)	14.2(0.56)	30.2(1.19)
16	1/2	-LM-ML16-NS8	38.0(1.50)	24.4(0.96)	25.0(0.98)	23.8(0.94)	11.9(0.47)	19.1(0.75)	35.1(1.38)
16	3/4	-LM-ML16-NS12	39.8(1.57)	24.4(0.96)	25.0(0.98)	27.0(1.06)	12.7(0.50)	19.1(0.75)	36.8(1.45)
18	1/2	-LM-ML18-NS8	39.8(1.57)	24.4(0.96)	30.0(1.18)	27.0(1.06)	11.9(0.47)	19.1(0.75)	36.8(1.45)
18	3/4	-LM-ML18-NS12	39.8(1.57)	24.4(0.96)	30.0(1.18)	27.0(1.06)	15.1(0.59)	19.1(0.75)	36.8(1.45)
20	1/2	-LM-ML20-NS8	44.6(1.76)	26.0(1.02)	32.0(1.26)	34.9(1.37)	11.9(0.47)	19.1(0.75)	41.7(1.64)
20	3/4	-LM-ML20-NS12	44.6(1.76)	26.0(1.02)	32.0(1.26)	34.9(1.37)	15.9(0.63)	19.1(0.75)	41.7(1.64)
22	3/4	-LM-ML22-NS12	44.6(1.76)	26.0(1.02)	32.0(1.26)	34.9(1.37)	15.9(0.63)	19.1(0.75)	41.7(1.64)
22	1	-LM-ML22-NS16	44.6(1.76)	26.0(1.02)	32.0(1.26)	34.9(1.37)	18.3(0.72)	23.9(0.94)	46.5(1.83)
25	3/4	-LM-ML25-NS12	49.1(1.93)	31.3(1.23)	38.0(1.50)	34.9(1.37)	15.9(0.63)	19.1(0.75)	41.7(1.64)
25	1	-LM-ML25-NS16	49.1(1.93)	31.3(1.23)	38.0(1.50)	34.9(1.37)	21.8(0.86)	23.9(0.94)	46.5(1.83)
30	1 1/4	-LM-ML30-NS20	69.9(2.75)	39.6(1.56)	50.0(1.97)	42.9(1.69)	26.2(1.03)	23.9(0.94)	53.1(2.09)
32	1 1/4	-LM-ML32-NS20	72.3(2.85)	42.0(1.65)	50.0(1.97)	42.9(1.69)	27.8(1.09)	23.9(0.94)	53.1(2.09)
38	1 1/2	-LM-ML38-NS24	84.0(3.31)	49.4(1.94)	60.0(2.36)	50.8(2.00)	33.7(1.33)	26.2(1.03)	60.4(2.38)

Male Elbows

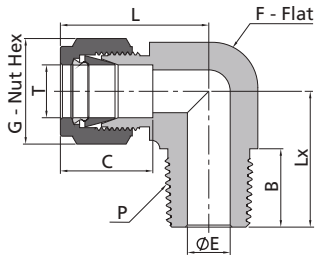

The E dimension refers to the smallest nominal orifice. It might be larger at tapered thread end, straight thread end.

Metric Tube									ISO Tapered Thread (RT)
T-Tube O.D. (mm)	P-RT Size	Basic Ordering Number	Dimensions, mm (in.)						
			L	C	G	F	E	B	Lx
3	1/8	-LM-ML3-RT2	23.6(0.93)	12.9(0.51)	12.0(0.47)	11.1(0.44)	2.4(0.09)	9.7(0.38)	17.8(0.70)
3	1/4	-LM-ML3-RT4	24.6(0.97)	12.9(0.51)	12.0(0.47)	12.7(0.50)	2.4(0.09)	14.2(0.56)	23.4(0.92)
4	1/8	-LM-ML4-RT2	25.4(1.00)	13.7(0.54)	12.0(0.47)	12.7(0.50)	2.4(0.09)	9.7(0.38)	18.8(0.74)
4	1/4	-LM-ML4-RT4	25.4(1.00)	13.7(0.54)	12.0(0.47)	12.7(0.50)	2.4(0.09)	14.2(0.56)	23.4(0.92)
6	1/8	-LM-ML6-RT2	27.0(1.06)	15.3(0.60)	14.0(0.55)	12.7(0.50)	4.8(0.19)	9.7(0.38)	18.8(0.74)
6	1/4	-LM-ML6-RT4	27.0(1.06)	15.3(0.60)	14.0(0.55)	12.7(0.50)	4.8(0.19)	14.2(0.56)	23.4(0.92)
6	3/8	-LM-ML6-RT6	29.8(1.17)	15.3(0.60)	14.0(0.55)	17.5(0.69)	4.8(0.19)	14.2(0.56)	26.2(1.03)
6	1/2	-LM-ML6-RT8	31.8(1.25)	15.3(0.60)	14.0(0.55)	20.6(0.81)	4.8(0.19)	19.1(0.75)	33.0(1.30)
8	1/8	-LM-ML8-RT2	28.8(1.13)	16.2(0.64)	16.0(0.63)	14.3(0.56)	4.8(0.19)	9.7(0.38)	19.8(0.78)
8	1/4	-LM-ML8-RT4	28.8(1.13)	16.2(0.64)	16.0(0.63)	14.3(0.56)	6.4(0.25)	14.2(0.56)	24.4(0.96)
8	3/8	-LM-ML8-RT6	30.6(1.20)	16.2(0.64)	16.0(0.63)	17.5(0.69)	6.4(0.25)	14.2(0.56)	26.2(1.03)
8	1/2	-LM-ML8-RT8	32.6(1.28)	16.2(0.64)	16.0(0.63)	20.6(0.81)	6.4(0.25)	19.1(0.75)	33.0(1.30)
10	1/8	-LM-ML10-RT2	31.5(1.24)	17.2(0.68)	19.0(0.75)	17.5(0.69)	4.8(0.19)	9.7(0.38)	21.6(0.85)
10	1/4	-LM-ML10-RT4	31.5(1.24)	17.2(0.68)	19.0(0.75)	17.5(0.69)	7.1(0.28)	14.2(0.56)	26.2(1.03)
10	3/8	-LM-ML10-RT6	31.5(1.24)	17.2(0.68)	19.0(0.75)	17.5(0.69)	7.9(0.31)	14.2(0.56)	26.2(1.03)
10	1/2	-LM-ML10-RT8	33.5(1.32)	17.2(0.68)	19.0(0.75)	20.6(0.81)	7.9(0.31)	19.1(0.75)	33.0(1.30)
12	1/8	-LM-ML12-RT2	36.0(1.42)	22.8(0.90)	22.0(0.87)	20.6(0.81)	4.8(0.19)	9.7(0.38)	23.6(0.93)
12	1/4	-LM-ML12-RT4	36.0(1.42)	22.8(0.90)	22.0(0.87)	20.6(0.81)	7.1(0.28)	14.2(0.56)	28.2(1.11)
12	3/8	-LM-ML12-RT6	36.0(1.42)	22.8(0.90)	22.0(0.87)	20.6(0.81)	9.5(0.37)	14.2(0.56)	28.2(1.11)
12	1/2	-LM-ML12-RT8	36.0(1.42)	22.8(0.90)	22.0(0.87)	20.6(0.81)	9.5(0.37)	19.1(0.75)	33.0(1.30)
12	3/4	-LM-ML12-RT12	39.8(1.57)	22.8(0.90)	22.0(0.87)	27.0(1.06)	9.5(0.37)	19.1(0.75)	36.8(1.45)
14	1/2	-LM-ML14-RT8	38.1(1.50)	24.4(0.96)	25.0(0.98)	23.8(0.94)	11.1(0.44)	19.1(0.75)	35.1(1.38)
15	1/2	-LM-ML15-RT8	38.1(1.50)	24.4(0.96)	25.0(0.98)	23.8(0.94)	11.9(0.47)	19.1(0.75)	35.1(1.38)
16	1/4	-LM-ML16-RT4	38.0(1.50)	24.4(0.96)	25.0(0.98)	23.8(0.94)	7.1(0.28)	14.2(0.56)	30.2(1.19)
16	3/8	-LM-ML16-RT6	38.0(1.50)	24.4(0.96)	25.0(0.98)	23.8(0.94)	9.5(0.37)	14.2(0.56)	30.2(1.19)
16	1/2	-LM-ML16-RT8	38.0(1.50)	24.4(0.96)	25.0(0.98)	23.8(0.94)	11.9(0.47)	19.1(0.75)	35.1(1.38)
16	3/4	-LM-ML16-RT12	39.8(1.57)	24.4(0.96)	25.0(0.98)	27.0(1.06)	12.7(0.50)	19.1(0.75)	36.8(1.45)
18	1/2	-LM-ML18-RT8	39.8(1.57)	24.4(0.96)	30.0(1.18)	27.0(1.06)	11.9(0.47)	19.1(0.75)	36.8(1.45)
18	3/4	-LM-ML18-RT12	39.8(1.57)	24.4(0.96)	30.0(1.18)	27.0(1.06)	15.1(0.59)	19.1(0.75)	36.8(1.45)
20	1/2	-LM-ML20-RT8	44.6(1.76)	26.0(1.02)	32.0(1.26)	34.9(1.37)	11.9(0.47)	19.1(0.75)	41.7(1.64)
20	3/4	-LM-ML20-RT12	44.6(1.76)	26.0(1.02)	32.0(1.26)	34.9(1.37)	15.9(0.63)	19.1(0.75)	41.7(1.64)
22	3/4	-LM-ML22-RT12	44.6(1.76)	26.0(1.02)	32.0(1.26)	34.9(1.37)	15.9(0.63)	19.1(0.75)	41.7(1.64)
22	1	-LM-ML22-RT16	44.6(1.76)	26.0(1.02)	32.0(1.26)	34.9(1.37)	18.3(0.72)	23.9(0.94)	46.5(1.83)
25	3/4	-LM-ML25-RT12	49.1(1.93)	31.3(0.90)	38.0(1.50)	34.9(1.37)	15.9(0.63)	19.1(0.75)	41.7(1.64)
25	1	-LM-ML25-RT16	49.1(1.93)	31.3(0.90)	38.0(1.50)	34.9(1.37)	21.8(0.86)	23.9(0.94)	46.5(1.83)
28	1	-LM-ML28-RT16	64.0(2.52)	36.6(0.90)	46.0(1.81)	42.9(1.69)	21.8(0.86)	23.9(0.94)	53.1(2.09)

45° Male Elbows

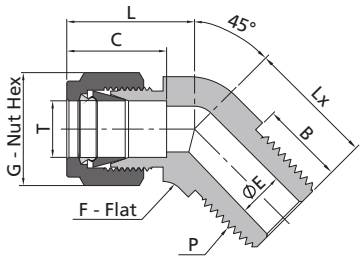

The E dimension refers to the smallest nominal orifice. It might be larger at tapered thread end, straight thread end.

Fractional Tube									NPT Thread
T-Tube O.D. (in.)	P-NPT Size	Basic Ordering Number	Dimensions, in. (mm)						
			L	C	G	F	E	B	Lx
1/16	1/16	-VM-FL1-NS1	0.82(20.8)	0.34(8.6)	0.31(7.9)	0.44(11.1)	0.05(1.3)	0.38(9.7)	0.66(16.8)
1/8	1/8	-VM-FL2-NS2	0.82(20.8)	0.50(12.7)	0.44(11.1)	0.44(11.1)	0.09(2.3)	0.38(9.7)	0.66(16.8)
3/16	1/8	-VM-FL3-NS2	0.85(21.6)	0.54(13.7)	0.50(12.7)	0.44(11.1)	0.12(3.0)	0.38(9.7)	0.58(14.7)
1/4	1/8	-VM-FL4-NS2	0.97(24.6)	0.60(15.2)	0.56(14.3)	0.50(12.7)	0.19(4.8)	0.38(9.7)	0.65(16.5)
1/4	1/4	-VM-FL4-NS4	0.97(24.6)	0.60(15.2)	0.56(14.3)	0.50(12.7)	0.19(4.8)	0.56(14.2)	0.83(21.1)
5/16	1/8	-VM-FL5-NS2	0.94(24.0)	0.64(16.3)	0.63(15.9)	0.56(14.3)	0.19(4.8)	0.38(9.7)	0.66(16.8)
3/8	1/8	-VM-FL6-NS2	1.10(27.9)	0.66(16.8)	0.69(17.5)	0.63(15.9)	0.19(4.8)	0.38(9.7)	0.72(18.3)
3/8	1/4	-VM-FL6-NS4	1.10(27.9)	0.66(16.8)	0.69(17.5)	0.63(15.9)	0.28(7.1)	0.56(14.2)	0.90(22.9)
3/8	3/8	-VM-FL6-NS6	1.15(29.2)	0.66(16.8)	0.69(17.5)	0.81(20.6)	0.28(7.1)	0.56(14.2)	0.95(24.1)
1/2	3/8	-VM-FL8-NS6	1.26(32.0)	0.90(22.9)	0.87(22.2)	0.81(20.6)	0.38(9.7)	0.56(14.2)	0.95(24.1)
5/8	1/2	-VM-FL10-NS8	1.20(30.4)	0.96(24.4)	1.00(25.4)	0.94(23.8)	0.47(11.9)	0.56(14.2)	1.17(29.7)
3/4	3/4	-VM-FL12-NS12	1.34(34.0)	0.96(24.4)	1.13(28.6)	1.06(27.0)	0.62(15.7)	0.75(19.1)	1.22(31.0)
7/8	3/4	-VM-FL14-NS12	1.59(40.4)	1.02(25.9)	1.25(31.8)	1.25(31.8)	0.62(15.7)	0.75(19.1)	1.27(32.3)
1	1	-VM-FL16-NS16	1.59(40.4)	1.23(31.2)	1.50(38.1)	1.37(34.9)	0.88(22.4)	0.94(23.9)	1.49(37.8)

Metric Tube									NPT Thread
T-Tube O.D. (mm)	P-NPT Size	Basic Ordering Number	Dimensions, mm (in.)						
			L	C	G	F	E	B	Lx
6	1/8	-VM-ML6-NS2	23.4(0.92)	15.3(0.60)	14.0(0.55)	12.7(0.50)	4.8(0.19)	9.7(0.38)	16.8(0.66)
6	1/4	-VM-ML6-NS4	23.4(0.92)	15.3(0.60)	14.0(0.55)	12.7(0.50)	4.8(0.19)	14.2(0.56)	21.8(0.86)
8	1/8	-VM-ML8-NS2	24.3(0.96)	16.2(0.64)	16.0(0.63)	15.9(0.63)	4.8(0.19)	9.7(0.38)	16.8(0.66)
10	1/4	-VM-ML10-NS4	26.6(1.05)	17.2(0.68)	19.0(0.75)	17.5(0.69)	7.9(0.31)	14.2(0.56)	24.1(0.95)
12	3/8	-VM-ML12-NS6	29.1(1.15)	22.8(0.90)	22.0(0.87)	20.6(0.81)	9.5(0.37)	14.2(0.56)	24.1(0.95)
12	1/2	-VM-ML12-NS8	30.7(1.21)	22.8(0.90)	22.0(0.87)	20.6(0.81)	9.5(0.37)	19.1(0.75)	29.7(1.17)
16	1/2	-VM-ML16-NS8	30.4(1.20)	24.4(0.96)	25.0(0.98)	23.8(0.94)	11.9(0.47)	19.1(0.75)	29.7(1.17)

Positionable Male Elbows

SAE/MS Straight Thread

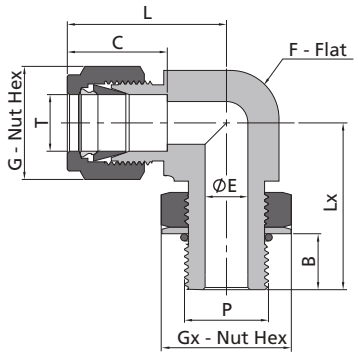

1. The E dimension refers to the smallest nominal orifice. It might be larger at tapered thread end, straight thread end.
2. Adapt to straight thread boss of SAE J1926-1, ISO 11926-1 and MS 16142.

Fractional Tube — **SAE/MS Straight Thread**

T-Tube O.D. (in.)	P-SAE Nominal Size	P-SAE/MS Thread Specification	Basic Ordering Number	Dimensions, in. (mm)							
				L	B	C	G	E	F	Lx	Gx
1/4	4	7/16-20	-LP-FL4-ST7	1.12(28.4)	0.39(9.9)	0.60(15.2)	0.56(14.3)	0.19(4.8)	0.50(12.7)	1.06(27.0)	0.56(14.3)
1/4	6	9/16-18	-LP-FL4-ST9	1.20(30.5)	0.44(11.2)	0.60(15.2)	0.56(14.3)	0.19(4.8)	0.63(15.9)	1.27(32.3)	0.69(17.5)
5/16	5	1/2-20	-LP-FL5-ST8	1.19(30.2)	0.39(9.9)	0.64(16.3)	0.63(15.9)	0.23(5.8)	0.56(14.3)	1.16(29.5)	0.63(15.9)
3/8	4	7/16-20	-LP-FL6-ST7	1.31(33.3)	0.39(9.9)	0.66(16.8)	0.69(17.5)	0.20(5.1)	0.63(15.9)	1.24(31.5)	0.56(14.3)
3/8	6	9/16-18	-LP-FL6-ST9	1.26(32.0)	0.44(11.2)	0.66(16.8)	0.69(17.5)	0.28(7.1)	0.63(15.9)	1.27(32.3)	0.69(17.5)
3/8	8	3/4-16	-LP-FL6-ST12	1.37(34.8)	0.50(12.7)	0.66(16.8)	0.69(17.5)	0.28(7.1)	0.81(20.6)	1.49(37.8)	0.87(22.2)
1/2	6	9/16-18	-LP-FL8-ST9	1.48(37.6)	0.44(11.2)	0.90(22.9)	0.87(22.2)	0.28(7.1)	0.81(20.6)	1.48(37.5)	0.69(17.5)
1/2	8	3/4-16	-LP-FL8-ST12	1.48(37.6)	0.50(12.7)	0.90(22.9)	0.87(22.2)	0.41(10.4)	0.81(20.6)	1.49(37.8)	0.87(22.2)
5/8	10	7/8-14	-LP-FL10-ST14	1.56(39.6)	0.56(14.2)	0.96(24.4)	1.00(25.4)	0.50(12.7)	0.94(23.8)	1.71(43.4)	1.00(25.4)
3/4	12	1 1/16-12	-LP-FL12-ST17	1.63(41.4)	0.66(16.8)	0.96(24.4)	1.13(28.6)	0.62(15.7)	1.06(27.0)	1.92(48.8)	1.25(31.8)
7/8	14	1 3/16-12	-LP-FL14-ST19	1.70(43.2)	0.66(16.8)	1.02(25.9)	1.25(31.8)	0.72(18.3)	1.25(31.8)	1.99(50.5)	1.37(34.9)
1	16	1 5/16-12	-LP-FL16-ST21	1.99(50.5)	0.66(16.8)	1.23(31.2)	1.50(38.1)	0.88(22.4)	1.37(34.9)	2.11(53.6)	1.50(38.1)
1 1/4	20	1 5/8-12	-LP-FL20-ST26	2.67(67.8)	0.66(16.8)	1.62(41.1)	1.87(47.6)	1.09(27.7)	1.69(42.9)	2.29(58.2)	1.87(47.6)
1 1/2	24	1 7/8-12	-LP-FL24-ST30	3.07(78.0)	0.66(16.8)	1.97(50.0)	2.25(57.2)	1.34(34.0)	2.00(50.8)	2.38(60.5)	2.13(54.0)

Positionable Male Elbows

ISO Parallel Thread

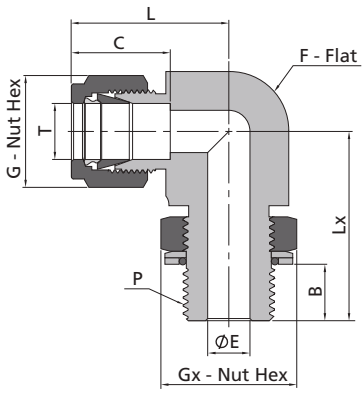

The E dimension refers to the smallest nominal orifice. It might be larger at tapered thread end, straight thread end.

Fractional Tube										ISO Parallel Thread (PP)
T-Tube O.D. (in.)	P-ISO Parallel Thread Size	Basic Ordering Number	Dimensions, in. (mm)							
			L	B	C	G	E	F	Lx	Gx
1/4	1/8	-LP-FL4-PP2	1.06(26.9)	0.26(6.6)	0.60(15.2)	0.56(14.3)	0.16(4.1)	0.50(12.7)	1.04(26.4)	0.56(14.3)
1/4	1/4	-LP-FL4-PP4	1.14(29.0)	0.35(9.0)	0.60(15.2)	0.56(14.3)	0.19(4.8)	0.63(15.9)	1.27(32.3)	0.75(19.1)
3/8	1/4	-LP-FL6-PP4	1.20(30.5)	0.35(9.0)	0.66(16.8)	0.69(17.5)	0.23(5.8)	0.63(15.9)	1.27(32.3)	0.75(19.1)
3/8	3/8	-LP-FL6-PP6	1.31(33.3)	0.37(9.4)	0.66(16.8)	0.69(17.5)	0.28(7.1)	0.81(20.6)	1.46(37.1)	0.87(22.2)
1/2	1/4	-LP-FL8-PP4	1.42(36.1)	0.35(9.0)	0.90(22.9)	0.87(22.2)	0.23(5.8)	0.81(20.6)	1.38(35.1)	0.75(19.1)
1/2	3/8	-LP-FL8-PP6	1.42(36.1)	0.37(9.4)	0.90(22.9)	0.87(22.2)	0.31(7.9)	0.81(20.6)	1.46(37.1)	0.87(22.2)
1/2	1/2	-LP-FL8-PP8	1.50(38.1)	0.51(13.0)	0.90(22.9)	0.87(22.2)	0.41(10.4)	0.94(23.8)	1.71(43.4)	1.06(27.0)
5/8	1/2	-LP-FL10-PP8	1.50(38.1)	0.51(13.0)	0.96(24.4)	1.00(25.4)	0.47(11.9)	0.94(23.8)	1.71(43.4)	1.06(27.0)
3/4	1/2	-LP-FL12-PP8	1.57(39.9)	0.51(13.0)	0.96(24.4)	1.13(28.6)	0.47(11.9)	1.06(27.0)	1.78(45.2)	1.06(27.0)
3/4	3/4	-LP-FL12-PP12	1.57(39.9)	0.51(13.0)	0.96(24.4)	1.13(28.6)	0.62(15.7)	1.06(27.0)	1.92(48.8)	1.37(34.9)
1	3/4	-LP-FL16-PP12	1.93(49.0)	0.51(13.0)	1.23(31.2)	1.50(38.1)	0.62(15.7)	1.37(34.9)	2.10(53.3)	1.37(34.9)
1	1	-LP-FL16-PP16	1.93(49.0)	0.52(13.2)	1.23(31.2)	1.50(38.1)	0.78(19.8)	1.37(34.9)	2.11(53.6)	1.63(41.3)

Metric Tube										ISO Parallel Thread (PP)
T-Tube O.D. (mm)	P-ISO Parallel Thread Size	Basic Ordering Number	Dimensions, mm (in.)							
			L	B	C	G	E	F	Lx	Gx
6	1/8	-LP-ML6-PP2	27.0(1.06)	6.6(0.26)	15.3(0.60)	14.0(0.55)	4.0(0.16)	12.7(0.50)	26.4(1.04)	14.3(0.56)
6	1/4	-LP-ML6-PP4	29.0(1.14)	9.0(0.35)	15.3(0.60)	14.0(0.55)	4.8(0.19)	15.9(0.63)	32.3(1.27)	19.1(0.75)
8	1/8	-LP-ML8-PP2	28.8(1.13)	6.6(0.26)	16.2(0.64)	16.0(0.63)	4.0(0.16)	14.3(0.56)	27.4(1.08)	14.3(0.56)
8	1/4	-LP-ML8-PP4	29.9(1.18)	9.0(0.35)	16.2(0.64)	16.0(0.63)	5.9(0.23)	15.9(0.63)	32.2(1.27)	19.1(0.75)
10	1/4	-LP-ML10-PP4	33.5(1.32)	9.0(0.35)	17.2(0.68)	19.0(0.75)	5.9(0.23)	20.6(0.81)	35.0(1.38)	19.1(0.75)
10	3/8	-LP-ML10-PP6	33.5(1.32)	9.4(0.37)	17.2(0.68)	19.0(0.75)	7.9(0.31)	20.6(0.81)	37.1(1.46)	22.2(0.87)
12	1/4	-LP-ML12-PP4	36.0(1.42)	9.0(0.35)	22.8(0.90)	22.0(0.87)	5.9(0.23)	20.6(0.81)	35.0(1.38)	19.1(0.75)
12	3/8	-LP-ML12-PP6	36.0(1.42)	9.4(0.37)	22.8(0.90)	22.0(0.87)	7.9(0.31)	20.6(0.81)	37.1(1.46)	22.2(0.87)
12	1/2	-LP-ML12-PP8	38.0(1.50)	13.0(0.51)	22.8(0.90)	22.0(0.87)	9.5(0.37)	23.8(0.94)	43.4(1.71)	27.0(1.06)
12	3/4	-LP-ML12-PP12	39.8(1.57)	13.0(0.51)	22.8(0.90)	22.0(0.87)	9.5(0.37)	27.0(1.06)	48.8(1.92)	34.9(1.37)

45° Positionable Male Elbows

SAE/MS Straight Thread

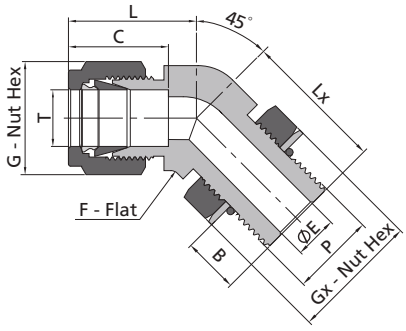

1. The E dimension refers to the smallest nominal orifice. It might be larger at tapered thread end, straight thread end.
2. Adapt to straight thread boss of SAE J1926-1, ISO 11926-1 and MS 16142.

Fractional Tube — **SAE/MS Straight Thread**

T-Tube O.D. (in.)	P-SAE Nominal Size	P-SAE/MS Thread Specification	Basic Ordering Number	Dimensions, in. (mm)							
				L	B	C	G	E	F	Lx	Gx
1/4	4	7/16-20	-VP-FL4-ST7	1.01(25.7)	0.39(9.9)	0.60(15.2)	0.56(14.3)	0.19(4.8)	0.50(12.7)	1.01(25.7)	0.56(14.3)
3/8	6	9/16-18	-VP-FL6-ST9	1.10(27.9)	0.44(11.2)	0.66(16.8)	0.69(17.5)	0.28(7.1)	0.63(15.9)	1.11(28.2)	0.69(17.5)
1/2	8	3/4-16	-VP-FL8-ST12	1.26(32.0)	0.50(12.7)	0.90(22.9)	0.87(22.2)	0.41(10.4)	0.81(20.6)	1.27(32.3)	0.87(22.2)
3/4	12	1 1/16-12	-VP-FL12-ST17	1.57(39.9)	0.66(16.8)	0.96(24.4)	1.13(28.6)	0.62(15.7)	1.06(27.0)	1.86(47.2)	1.25(31.8)
1	16	1 5/16-12	-VP-FL16-ST21	1.87(47.5)	0.66(16.8)	1.23(31.2)	1.50(38.1)	0.88(22.4)	1.37(34.9)	1.99(50.5)	1.50(38.1)

Female Elbows

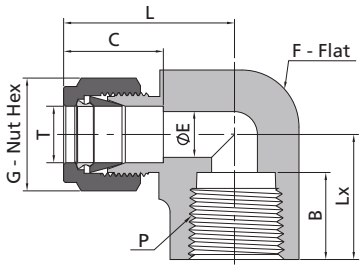

Fractional Tube									NPT Thread
T-Tube O.D. (in.)	P-NPT Size	Basic Ordering Number	Dimensions, in. (mm)						
			L	B	C	G	E	F	Lx
1/16	1/16	-LF-FL1-NS1	0.71(18.0)	0.39(9.9)	0.34(8.6)	0.31(7.9)	0.05(1.3)	0.44(11.1)	0.56(14.2)
1/16	1/8	-LF-FL1-NS2	0.81(20.6)	0.41(10.4)	0.34(8.6)	0.31(7.9)	0.05(1.3)	0.56(14.3)	0.75(19.1)
1/8	1/8	-LF-FL2-NS2	0.97(24.6)	0.41(10.4)	0.50(12.7)	0.44(11.1)	0.09(2.3)	0.50(12.7)	0.75(19.1)
1/8	1/4	-LF-FL2-NS4	1.08(27.4)	0.59(15.0)	0.50(12.7)	0.44(11.1)	0.09(2.3)	0.69(17.5)	0.88(22.4)
3/16	1/8	-LF-FL3-NS2	1.00(25.4)	0.41(10.4)	0.54(13.7)	0.50(12.7)	0.12(3.0)	0.5(12.7)	0.75(19.1)
1/4	1/8	-LF-FL4-NS2	1.06(26.9)	0.41(10.4)	0.60(15.2)	0.56(14.3)	0.19(4.8)	0.50(12.7)	0.75(19.1)
1/4	1/4	-LF-FL4-NS4	1.17(29.7)	0.59(15.0)	0.60(15.2)	0.56(14.3)	0.19(4.8)	0.69(17.5)	0.88(22.4)
1/4	3/8	-LF-FL4-NS6	1.25(31.8)	0.59(15.0)	0.60(15.2)	0.56(14.3)	0.19(4.8)	0.81(20.6)	0.88(22.4)
1/4	1/2	-LF-FL4-NS8	1.36(34.5)	0.78(19.8)	0.60(15.2)	0.56(14.3)	0.19(4.8)	1.00(25.4)	1.12(28.4)
5/16	1/8	-LF-FL5-NS2	1.13(28.7)	0.41(10.4)	0.64(16.3)	0.63(15.9)	0.25(6.4)	0.56(14.3)	0.75(19.1)
5/16	1/4	-LF-FL5-NS4	1.20(30.5)	0.59(15.0)	0.64(16.3)	0.63(15.9)	0.25(6.4)	0.69(17.5)	0.88(22.4)
3/8	1/8	-LF-FL6-NS2	1.20(30.5)	0.41(10.4)	0.66(16.8)	0.69(17.5)	0.28(7.1)	0.63(15.9)	0.75(19.1)
3/8	1/4	-LF-FL6-NS4	1.23(31.2)	0.59(15.0)	0.66(16.8)	0.69(17.5)	0.28(7.1)	0.69(17.5)	0.88(22.4)
3/8	3/8	-LF-FL6-NS6	1.31(33.3)	0.59(15.0)	0.66(16.8)	0.69(17.5)	0.28(7.1)	0.81(20.6)	0.88(22.4)
3/8	1/2	-LF-FL6-NS8	1.42(36.1)	0.78(19.8)	0.66(16.8)	0.69(17.5)	0.28(7.1)	1.00(25.4)	1.12(28.4)
1/2	1/4	-LF-FL8-NS4	1.42(36.1)	0.59(15.0)	0.90(22.9)	0.87(22.2)	0.41(10.4)	0.81(20.6)	0.88(22.4)
1/2	3/8	-LF-FL8-NS6	1.42(36.1)	0.59(15.0)	0.90(22.9)	0.87(22.2)	0.41(10.4)	0.81(20.6)	0.88(22.4)
1/2	1/2	-LF-FL8-NS8	1.53(38.9)	0.78(19.8)	0.90(22.9)	0.87(22.2)	0.41(10.4)	1.00(25.4)	1.12(28.4)
5/8	3/8	-LF-FL10-NS6	1.50(38.1)	0.59(15.0)	0.96(24.4)	1.00(25.4)	0.50(12.7)	0.94(23.8)	0.88(22.4)
5/8	1/2	-LF-FL10-NS8	1.57(39.9)	0.78(19.8)	0.96(24.4)	1.00(25.4)	0.50(12.7)	1.06(27.0)	1.12(28.4)
3/4	1/2	-LF-FL12-NS8	1.57(39.9)	0.78(19.8)	0.96(24.4)	1.13(28.6)	0.62(15.7)	1.06(27.0)	1.12(28.4)
3/4	3/4	-LF-FL12-NS12	1.76(44.7)	0.81(20.6)	0.96(24.4)	1.13(28.6)	0.62(15.7)	1.37(34.9)	1.25(31.8)
7/8	3/4	-LF-FL14-NS12	1.76(44.7)	0.81(20.6)	1.02(25.9)	1.25(31.8)	0.72(18.3)	1.37(34.9)	1.25(31.8)
1	3/4	-LF-FL16-NS12	1.93(49.0)	0.81(20.6)	1.23(31.2)	1.50(38.1)	0.88(22.4)	1.37(34.9)	1.25(31.8)
1	1	-LF-FL16-NS16	2.11(53.6)	1.00(25.4)	1.23(31.2)	1.50(38.1)	0.88(22.4)	1.69(42.9)	1.50(38.1)

Metric Tube									NPT Thread
T-Tube O.D. (mm)	P-NPT Size	Basic Ordering Number	Dimensions, mm (in.)						
			L	B	C	G	E	F	Lx
6	1/8	-LF-ML6-NS2	27.0(1.06)	10.4(0.41)	15.3(0.60)	14.0(0.55)	4.8(0.19)	12.7(0.50)	19.0(0.75)
6	1/4	-LF-ML6-NS4	29.8(1.17)	15.0(0.59)	15.3(0.60)	14.0(0.55)	4.8(0.19)	17.5(0.69)	22.4(0.88)
8	1/8	-LF-ML8-NS2	28.8(1.13)	10.4(0.41)	16.2(0.64)	16.0(0.63)	6.4(0.25)	14.3(0.56)	19.1(0.75)
8	1/4	-LF-ML8-NS4	30.6(1.20)	15.0(0.59)	16.2(0.64)	16.0(0.63)	6.4(0.25)	17.5(0.69)	22.4(0.88)
10	1/4	-LF-ML10-NS4	33.5(1.32)	15.0(0.59)	17.2(0.68)	19.0(0.75)	7.9(0.31)	20.6(0.81)	22.4(0.88)
10	3/8	-LF-ML10-NS6	33.5(1.32)	15.0(0.59)	17.2(0.68)	19.0(0.75)	7.9(0.31)	20.6(0.81)	22.4(0.88)
10	1/2	-LF-ML10-NS8	36.6(1.44)	19.8(0.78)	17.2(0.68)	19.0(0.75)	7.9(0.31)	25.4(1.00)	28.5(1.12)
12	1/4	-LF-ML12-NS4	36.0(1.42)	15.0(0.59)	22.8(0.90)	22.0(0.87)	9.5(0.37)	20.6(0.81)	22.4(0.88)
12	3/8	-LF-ML12-NS6	36.0(1.42)	15.0(0.59)	22.8(0.90)	22.0(0.87)	9.5(0.37)	20.6(0.81)	22.4(0.88)
12	1/2	-LF-ML12-NS8	38.8(1.53)	19.8(0.78)	22.8(0.90)	22.0(0.87)	9.5(0.37)	25.4(1.00)	28.4(1.12)
16	3/8	-LF-ML16-NS6	39.5(1.56)	15.0(0.59)	24.4(0.96)	25.0(0.98)	12.7(0.50)	27.0(1.06)	23.6(0.93)
16	1/2	-LF-ML16-NS8	39.5(1.56)	19.8(0.78)	24.4(0.96)	25.0(0.98)	12.7(0.50)	27.0(1.06)	28.5(1.12)

Union Elbows

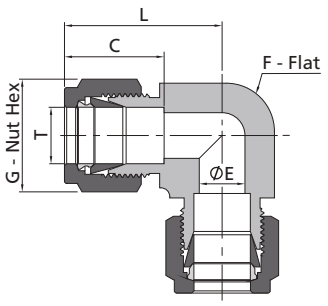

Fractional Tube

T-Tube O.D. (in.)	Basic Ordering Number	Dimensions, in. (mm)				
		L	C	G	F	E
1/16	-LU-FL1	0.70(17.8)	0.34(8.6)	0.31(7.9)	0.37(9.5)	0.05(1.3)
1/8	-LU-FL2	0.88(22.4)	0.50(12.7)	0.44(11.1)	0.37(9.5)	0.09(2.3)
3/16	-LU-FL3	1.00(25.4)	0.54(13.7)	0.50(12.7)	0.50(12.7)	0.12(3.0)
1/4	-LU-FL4	1.06(26.9)	0.60(15.2)	0.56(14.3)	0.50(12.7)	0.19(4.8)
5/16	-LU-FL5	1.13(28.7)	0.64(16.3)	0.63(15.9)	0.56(14.3)	0.25(6.4)
3/8	-LU-FL6	1.20(30.5)	0.66(16.8)	0.69(17.5)	0.63(15.9)	0.28(7.1)
1/2	-LU-FL8	1.42(36.1)	0.90(22.9)	0.87(22.2)	0.81(20.6)	0.41(10.4)
5/8	-LU-FL10	1.50(38.1)	0.96(24.4)	1.00(25.4)	0.94(23.8)	0.5(12.7)
3/4	-LU-FL12	1.57(39.9)	0.96(24.4)	1.13(28.6)	1.06(27.0)	0.62(15.7)
7/8	-LU-FL14	1.76(44.7)	1.02(25.9)	1.25(31.8)	1.37(34.9)	0.72(18.3)
1	-LU-FL16	1.93(49.0)	1.23(31.2)	1.50(38.1)	1.37(34.9)	0.88(22.4)
1 1/8	-LU-FL18	2.63(66.9)	1.44(36.7)	1.75(44.5)	1.69(42.9)	0.97(24.6)
1 1/4	-LU-FL20	2.62(66.5)	1.62(41.1)	1.87(47.6)	1.69(42.9)	1.09(27.7)
1 1/2	-LU-FL24	3.07(78.0)	1.97(50.0)	2.25(57.2)	2.00(50.8)	1.34(34.0)

Metric Tube

T-Tube O.D. (mm)	Basic Ordering Number	Dimensions, mm (in.)				
		L	C	G	F	E
3	-LU-ML3	22.3(0.88)	12.9(0.51)	12.0(0.47)	9.5(0.37)	2.4(0.09)
4	-LU-ML4	25.4(1.00)	13.7(0.54)	12.0(0.47)	12.7(0.50)	2.4(0.09)
6	-LU-ML6	27.0(1.06)	15.3(0.60)	14.0(0.55)	12.7(0.50)	4.8(0.19)
8	-LU-ML8	28.8(1.13)	16.2(0.64)	16.0(0.63)	14.3(0.56)	6.4(0.25)
10	-LU-ML10	31.5(1.24)	17.2(0.68)	19.0(0.75)	17.5(0.69)	7.9(0.31)
12	-LU-ML12	36.0(1.42)	22.8(0.90)	22.0(0.87)	20.6(0.81)	9.5(0.37)
14	-LU-ML14	38.0(1.50)	24.4(0.96)	25.0(0.98)	23.8(0.94)	11.0(0.43)
15	-LU-ML15	38.0(1.50)	24.4(0.96)	25.0(0.98)	23.8(0.94)	11.9(0.47)
16	-LU-ML16	38.0(1.50)	24.4(0.96)	25.0(0.98)	23.8(0.94)	12.7(0.50)
18	-LU-ML18	39.8(1.57)	24.4(0.96)	30.0(1.18)	27.0(1.06)	15.1(0.59)
20	-LU-ML20	44.6(1.76)	26.0(1.02)	32.0(1.26)	34.9(1.37)	15.9(0.63)
22	-LU-ML22	44.6(1.76)	26.0(1.02)	32.0(1.26)	34.9(1.37)	18.3(0.72)
25	-LU-ML25	49.1(1.93)	31.3(1.23)	38.0(1.5)	34.9(1.37)	21.8(0.86)
28	-LU-ML28	64.0(2.52)	36.6(1.44)	46.0(1.81)	42.9(1.69)	21.8(0.86)
30	-LU-ML30	69.9(2.75)	39.6(1.56)	50.0(1.97)	42.9(1.69)	26.2(1.03)
32	-LU-ML32	72.3(2.85)	42.0(1.65)	50.0(1.97)	42.9(1.69)	28.6(1.13)
38	-LU-ML38	84.0(3.31)	49.4(1.94)	60.0(2.36)	50.8(2.00)	33.7(1.33)

Union Reducing Elbows

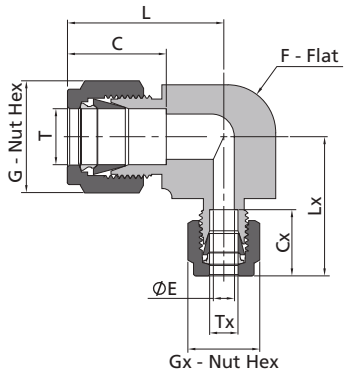

Fractional Tube

T-Tube O.D. (in.)	Tx-Tube O.D. (in.)	Basic Ordering Number	Dimensions, in. (mm)							
			L	C	G	F	E	Cx	Gx	Lx
3/16	1/8	-LU-FL3-FL2	1.00(25.4)	0.54(13.7)	0.50(12.7)	0.50(12.7)	0.09(2.3)	0.50(12.7)	0.44(11.1)	0.97(24.7)
1/4	1/8	-LU-FL4-FL2	1.06(26.9)	0.60(15.2)	0.56(14.3)	0.50(12.7)	0.09(2.3)	0.50(12.7)	0.44(11.1)	1.00(25.4)
5/16	1/8	-LU-FL5-FL2	1.17(29.7)	0.64(16.3)	0.63(15.9)	0.56(14.3)	0.09(2.3)	0.50(12.7)	0.44(11.1)	1.04(26.4)
5/16	1/4	-LU-FL5-FL4	1.17(29.7)	0.64(16.3)	0.63(15.9)	0.56(14.3)	0.19(4.8)	0.60(15.2)	0.56(14.3)	1.14(29.0)
3/8	1/8	-LU-FL6-FL2	1.20(30.5)	0.66(16.8)	0.69(17.5)	0.63(15.9)	0.09(2.3)	0.50(12.7)	0.44(11.1)	1.04(26.4)
3/8	1/4	-LU-FL6-FL4	1.20(30.5)	0.66(16.8)	0.69(17.5)	0.63(15.9)	0.19(4.8)	0.60(15.2)	0.56(14.3)	1.14(29.0)
3/8	5/16	-LU-FL6-FL5	1.20(30.5)	0.66(16.8)	0.69(17.5)	0.63(15.9)	0.25(6.4)	0.64(16.3)	0.63(15.9)	1.17(29.7)
1/2	1/4	-LU-FL8-FL4	1.42(36.1)	0.90(22.9)	0.87(22.2)	0.81(20.6)	0.19(4.8)	0.60(15.2)	0.56(14.3)	1.27(32.2)
1/2	5/16	-LU-FL8-FL5	1.42(36.1)	0.90(22.9)	0.87(22.2)	0.81(20.6)	0.25(6.4)	0.64(16.3)	0.63(15.9)	1.28(32.5)
1/2	3/8	-LU-FL8-FL6	1.42(36.1)	0.90(22.9)	0.87(22.2)	0.81(20.6)	0.28(7.1)	0.66(16.8)	0.69(17.5)	1.32(33.6)
5/8	3/8	-LU-FL10-FL6	1.50(38.1)	0.96(24.4)	1.00(25.4)	0.94(23.8)	0.28(7.1)	0.66(16.8)	0.69(17.5)	1.40(35.6)
5/8	1/2	-LU-FL10-FL8	1.50(38.1)	0.96(24.4)	1.00(25.4)	0.94(23.8)	0.41(10.4)	0.90(22.9)	0.87(22.2)	1.50(38.1)
3/4	1/4	-LU-FL12-FL4	1.57(39.9)	0.96(24.4)	1.13(28.6)	1.06(27.0)	0.19(4.8)	0.60(15.2)	0.56(14.3)	1.41(35.9)
3/4	3/8	-LU-FL12-FL6	1.57(39.9)	0.96(24.4)	1.13(28.6)	1.06(27.0)	0.28(7.1)	0.66(16.8)	0.69(17.5)	1.47(37.4)
3/4	1/2	-LU-FL12-FL8	1.57(39.9)	0.96(24.4)	1.13(28.6)	1.06(27.0)	0.41(10.4)	0.90(22.9)	0.87(22.2)	1.57(39.9)
7/8	1/4	-LU-FL14-FL4	1.76(44.7)	1.02(25.9)	1.25(31.8)	1.37(34.9)	0.19(4.8)	0.60(15.2)	0.56(14.3)	1.60(40.7)
1	1/2	-LU-FL16-FL8	1.93(49.0)	1.23(31.2)	1.50(38.1)	1.37(34.9)	0.41(10.4)	0.90(22.9)	0.87(22.2)	1.75(44.4)
1	3/4	-LU-FL16-FL12	1.93(49.0)	1.23(31.2)	1.50(38.1)	1.37(34.9)	0.62(15.7)	0.96(24.4)	1.13(28.6)	1.85(47.1)

Metric Tube

T-Tube O.D. (mm)	Tx-Tube O.D. (mm)	Basic Ordering Number	Dimensions, mm (in.)							
			L	C	G	F	E	Cx	Gx	Lx
8	6	-LU-ML8-ML6	28.8(1.13)	16.2(0.64)	16.0(0.63)	14.3(0.56)	4.8(0.19)	15.3(0.60)	14.0(0.55)	27.9(1.10)
10	8	-LU-ML10-ML8	31.5(1.24)	17.2(0.68)	19.0(0.75)	17.5(0.69)	6.4(0.25)	16.2(0.64)	16.0(0.63)	30.5(1.20)
12	8	-LU-ML12-ML8	36.0(1.42)	22.8(0.90)	22.0(0.87)	20.6(0.81)	6.4(0.25)	16.2(0.64)	16.0(0.63)	32.6(1.28)
14	8	-LU-ML14-ML8	38.8(1.53)	24.4(0.96)	25.0(0.98)	23.8(0.94)	6.4(0.25)	16.2(0.64)	16.0(0.63)	34.7(1.37)
14	10	-LU-ML14-ML10	38.8(1.53)	24.4(0.96)	25.0(0.98)	23.8(0.94)	7.9(0.31)	17.2(0.68)	19.0(0.75)	35.5(1.40)

Bulkhead Union Elbows

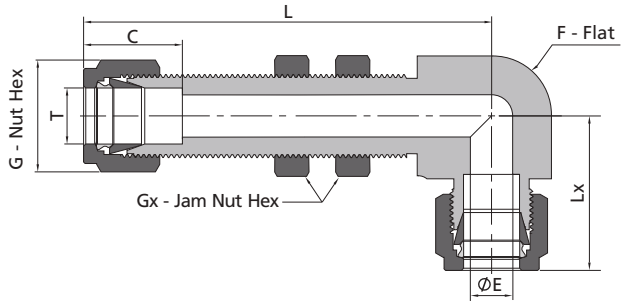

Fractional Tube

T-Tube O.D. (in.)	Basic Ordering Number	Dimensions, in. (mm)							Panel Hole Size in. (mm)	Max. Panel Thickness in. (mm)
		L	C	E	G	F	Lx	Gx		
1/8	-BBLU-FL2	1.93(49.0)	0.50(12.7)	0.09(2.3)	0.44(11.1)	0.37(9.5)	0.88(22.4)	0.50(12.7)	0.33(8.3)	0.60(15.2)
3/16	-BBLU-FL3	2.03(51.6)	0.54(13.7)	0.12(3.0)	0.50(12.7)	0.50(12.7)	1.00(25.4)	0.56(14.3)	0.39(9.9)	0.61(15.5)
1/4	-BBLU-FL4	2.10(53.3)	0.60(15.2)	0.19(4.8)	0.56(14.3)	0.50(12.7)	1.06(26.9)	0.63(15.9)	0.45(11.5)	0.61(15.5)
5/16	-BBLU-FL5	2.30(58.4)	0.64(16.3)	0.25(6.4)	0.63(15.9)	0.63(15.9)	1.13(28.7)	0.69(17.5)	0.52(13.1)	0.74(18.8)
3/8	-BBLU-FL6	2.36(59.9)	0.66(16.8)	0.28(7.1)	0.69(15.7)	0.63(15.9)	1.20(30.5)	0.75(19.1)	0.58(14.7)	0.74(18.8)
1/2	-BBLU-FL8	2.67(67.8)	0.90(22.9)	0.41(10.4)	0.87(22.2)	0.81(20.6)	1.42(36.1)	0.94(23.8)	0.76(19.4)	0.74(18.8)
5/8	-BBLU-FL10	2.82(71.6)	0.96(24.4)	0.50(12.7)	1.00(25.4)	0.94(23.8)	1.50(38.1)	1.06(27.0)	0.89(22.6)	0.50(12.7)
3/4	-BBLU-FL12	3.08(78.2)	0.96(24.4)	0.62(12.7)	1.13(28.6)	1.06(27.0)	1.57(39.9)	1.19(30.2)	1.02(25.8)	0.66(16.8)

Male Branch Tees

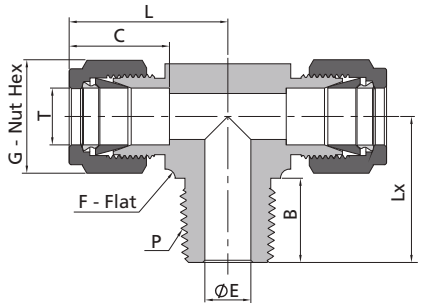

The E dimension refers to the smallest nominal orifice. It might be larger at tapered thread end, straight thread end.

Fractional Tube — **NPT Thread**

T-Tube O.D. (in.)	P-NPT Size	Basic Ordering Number	Dimensions, in. (mm)						
			L	C	G	F	E	B	Lx
1/8	1/8	-TTM-FL2-NS2	0.93(23.6)	0.50(12.7)	0.44(11.1)	0.44(11.1)	0.09(2.3)	0.38(9.7)	0.70(17.8)
1/8	1/4	-TTM-FL2-NS4	0.97(24.6)	0.50(12.7)	0.44(11.1)	0.50(12.7)	0.09(2.3)	0.56(14.2)	0.92(23.4)
3/16	1/8	-TTM-FL3-NS2	0.96(24.4)	0.54(13.7)	0.50(12.7)	0.44(11.1)	0.12(3.0)	0.38(9.7)	0.70(17.8)
1/4	1/8	-TTM-FL4-NS2	1.06(26.9)	0.60(15.2)	0.56(14.3)	0.50(12.7)	0.19(4.8)	0.38(9.7)	0.74(18.8)
1/4	1/4	-TTM-FL4-NS4	1.06(26.9)	0.60(15.2)	0.56(14.3)	0.50(12.7)	0.19(4.8)	0.56(14.2)	0.92(23.4)
5/16	1/8	-TTM-FL5-NS2	1.17(29.7)	0.64(16.3)	0.63(15.9)	0.63(15.9)	0.19(4.8)	0.38(9.7)	0.82(20.8)
5/16	1/4	-TTM-FL5-NS4	1.17(29.7)	0.64(16.3)	0.63(15.9)	0.63(15.9)	0.25(6.4)	0.56(14.2)	1.01(25.7)
3/8	1/4	-TTM-FL6-NS4	1.20(30.5)	0.66(16.8)	0.69(17.5)	0.63(15.9)	0.28(7.1)	0.56(14.2)	1.00(25.4)
3/8	3/8	-TTM-FL6-NS6	1.31(33.3)	0.66(16.8)	0.69(17.5)	0.81(20.6)	0.28(7.1)	0.56(14.2)	1.11(28.2)
1/2	3/8	-TTM-FL8-NS6	1.42(36.1)	0.90(22.9)	0.87(22.2)	0.81(20.6)	0.38(9.7)	0.56(14.2)	1.11(28.2)
1/2	1/2	-TTM-FL8-NS8	1.42(36.1)	0.90(22.9)	0.87(22.2)	0.81(20.6)	0.41(10.4)	0.75(19.1)	1.30(33.0)
5/8	1/2	-TTM-FL10-NS8	1.53(38.9)	0.96(24.4)	1.00(25.4)	1.00(25.4)	0.47(11.9)	0.75(19.1)	1.41(35.8)
3/4	3/4	-TTM-FL12-NS12	1.57(39.9)	0.96(24.4)	1.13(28.6)	1.06(27.0)	0.62(15.7)	0.75(19.1)	1.45(36.8)
7/8	3/4	-TTM-FL14-NS12	1.88(47.8)	1.02(25.9)	1.25(31.8)	1.37(34.9)	0.62(15.7)	0.75(19.1)	1.87(47.5)
1	3/4	-TTM-FL16-NS12	1.94(49.3)	1.23(31.2)	1.50(38.1)	1.37(34.9)	0.62(15.7)	0.75(19.1)	1.87(47.5)
1	1	-TTM-FL16-NS16	1.94(49.3)	1.23(31.2)	1.50(38.1)	1.37(34.9)	0.88(22.4)	0.94(23.9)	1.84(46.7)

Metric Tube — **NPT Thread**

T-Tube O.D. (mm)	P-NPT Size	Basic Ordering Number	Dimensions, mm (in.)						
			L	C	G	F	E	B	Lx
6	1/8	-TTM-ML6-NS2	27.0(1.06)	15.3(0.60)	14.0(0.55)	12.7(0.50)	4.8(0.19)	9.7(0.38)	18.8(0.74)
6	1/4	-TTM-ML6-NS4	27.0(1.06)	15.3(0.60)	14.0(0.55)	12.7(0.50)	4.8(0.19)	14.2(0.56)	23.4(0.92)
8	1/8	-TTM-ML8-NS2	29.9(1.18)	16.2(0.64)	16.0(0.63)	15.9(0.63)	4.8(0.19)	9.7(0.38)	20.8(0.82)
8	1/4	-TTM-ML8-NS4	29.9(1.18)	16.2(0.64)	16.0(0.63)	15.9(0.63)	6.4(0.25)	14.2(0.56)	25.4(1.00)
10	1/4	-TTM-ML10-NS4	33.5(1.32)	17.2(0.68)	19.0(0.75)	20.6(0.81)	7.1(0.28)	14.2(0.56)	28.2(1.11)
10	3/8	-TTM-ML10-NS6	33.5(1.32)	17.2(0.68)	19.0(0.75)	20.6(0.81)	7.9(0.31)	14.2(0.56)	28.2(1.11)
12	1/4	-TTM-ML12-NS4	36.0(1.42)	22.8(0.90)	22.0(0.87)	20.6(0.81)	7.1(0.28)	14.2(0.56)	28.2(1.11)
12	3/8	-TTM-ML12-NS6	36.0(1.42)	22.8(0.90)	22.0(0.87)	20.6(0.81)	9.5(0.37)	14.2(0.56)	28.2(1.11)
12	1/2	-TTM-ML12-NS8	36.0(1.42)	22.8(0.90)	22.0(0.87)	20.6(0.81)	9.5(0.37)	19.1(0.75)	33.0(1.30)
16	1/2	-TTM-ML16-NS8	38.8(1.53)	24.4(0.96)	25.0(0.98)	25.4(1.00)	11.9(0.47)	19.1(0.75)	35.8(1.41)

Male Run Tees

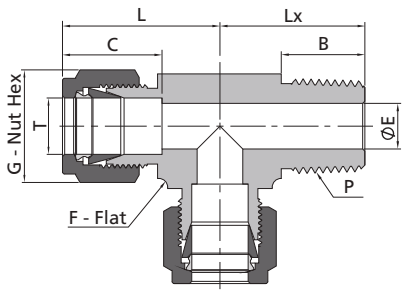

The E dimension refers to the smallest nominal orifice. It might be larger at tapered thread end, straight thread end.

Fractional Tube									NPT Thread
T-Tube O.D. (in.)	P-NPT Size	Basic Ordering Number	Dimensions, in. (mm)						
			L	C	G	F	E	B	Lx
1/8	1/8	-TMT-FL2-NS2	0.93(23.6)	0.50(12.7)	0.44(11.1)	0.44(11.1)	0.09(2.3)	0.38(9.7)	0.70(17.8)
1/8	1/4	-TMT-FL2-NS4	0.97(24.6)	0.50(12.7)	0.44(11.1)	0.50(12.7)	0.09(2.3)	0.56(14.2)	0.92(23.4)
3/16	1/8	-TMT-FL3-NS2	0.96(24.4)	0.54(13.7)	0.50(12.7)	0.44(11.1)	0.12(3.0)	0.38(9.7)	0.70(17.8)
1/4	1/8	-TMT-FL4-NS2	1.06(26.9)	0.60(15.2)	0.56(14.3)	0.50(12.7)	0.19(4.8)	0.38(9.7)	0.74(18.8)
1/4	1/4	-TMT-FL4-NS4	1.06(26.9)	0.60(15.2)	0.56(14.3)	0.50(12.7)	0.19(4.8)	0.56(14.2)	0.92(23.4)
5/16	1/8	-TMT-FL5-NS2	1.17(29.7)	0.64(16.3)	0.63(15.9)	0.63(15.9)	0.19(4.8)	0.38(9.7)	0.82(20.8)
5/16	1/4	-TMT-FL5-NS4	1.17(29.7)	0.64(16.3)	0.63(15.9)	0.63(15.9)	0.25(6.4)	0.56(14.2)	1.01(25.7)
3/8	1/4	-TMT-FL6-NS4	1.20(30.5)	0.66(16.8)	0.69(17.5)	0.63(15.9)	0.28(7.1)	0.56(14.2)	1.00(25.4)
3/8	3/8	-TMT-FL6-NS6	1.31(33.3)	0.66(16.8)	0.69(17.5)	0.81(20.6)	0.28(7.1)	0.56(14.2)	1.11(28.2)
1/2	3/8	-TMT-FL8-NS6	1.42(36.1)	0.90(22.9)	0.87(22.2)	0.81(20.6)	0.38(9.7)	0.56(14.2)	1.11(28.2)
1/2	1/2	-TMT-FL8-NS8	1.42(36.1)	0.90(22.9)	0.87(22.2)	0.81(20.6)	0.41(10.4)	0.75(19.1)	1.3(33.0)
5/8	1/2	-TMT-FL10-NS8	1.50(38.1)	0.96(24.4)	1.00(25.4)	0.94(23.8)	0.47(11.9)	0.75(19.1)	1.41(35.8)
3/4	3/4	-TMT-FL12-NS12	1.57(39.9)	0.96(24.4)	1.13(28.6)	1.06(27.0)	0.62(15.7)	0.75(19.1)	1.45(36.8)
7/8	3/4	-TMT-FL14-NS12	1.88(47.8)	1.02(25.9)	1.25(31.8)	1.37(34.9)	0.62(15.7)	0.75(19.1)	1.87(47.5)
1	3/4	-TMT-FL16-NS12	1.94(49.3)	1.23(31.2)	1.50(38.1)	1.37(34.9)	0.62(15.7)	0.75(19.1)	1.87(47.5)
1	1	-TMT-FL16-NS16	1.94(49.3)	1.23(31.2)	1.50(38.1)	1.37(34.9)	0.88(22.4)	0.94(23.9)	1.84(46.7)

Metric Tube									NPT Thread
T-Tube O.D. (mm)	P-NPT Size	Basic Ordering Number	Dimensions, mm (in.)						
			L	C	G	F	E	B	Lx
6	1/8	-TMT-ML6-NS2	27.0(1.06)	15.3(0.60)	14.0(0.55)	12.7(0.50)	4.8(0.19)	9.7(0.38)	18.0(0.71)
6	1/4	-TMT-ML6-NS4	27.0(1.06)	15.3(0.60)	14.0(0.55)	12.7(0.50)	4.8(0.19)	14.2(0.56)	23.4(0.92)
8	1/8	-TMT-ML8-NS2	29.9(1.18)	16.2(0.64)	16.0(0.63)	15.9(0.63)	4.8(0.19)	9.7(0.38)	20.8(0.82)
8	1/4	-TMT-ML8-NS4	29.9(1.18)	16.2(0.64)	16.0(0.63)	15.9(0.63)	6.4(0.25)	14.2(0.56)	25.4(1.00)
10	1/4	-TMT-ML10-NS4	33.5(1.32)	17.2(0.68)	19.0(0.75)	20.6(0.81)	7.1(0.28)	14.2(0.56)	28.2(1.11)
10	1/2	-TMT-ML10-NS8	33.5(1.32)	17.2(0.68)	19.0(0.75)	20.6(0.81)	7.9(0.31)	19.1(0.75)	33.0(1.3)
12	1/4	-TMT-ML12-NS4	36.0(1.42)	22.8(0.90)	22.0(0.87)	20.6(0.81)	7.1(0.28)	14.2(0.56)	28.2(1.11)
12	3/8	-TMT-ML12-NS6	36.0(1.42)	22.8(0.90)	22.0(0.87)	20.6(0.81)	9.5(0.37)	14.2(0.56)	28.2(1.11)
12	1/2	-TMT-ML12-NS8	36.0(1.42)	22.8(0.90)	22.0(0.87)	20.6(0.81)	9.5(0.37)	19.1(0.75)	33.0(1.30)
16	1/2	-TMT-ML16-NS8	38.0(1.50)	24.4(0.96)	25.0(0.98)	23.8(0.94)	11.9(0.47)	19.1(0.75)	35.0(1.38)

Positionable Male Branch Tees

SAE/MS Straight Thread

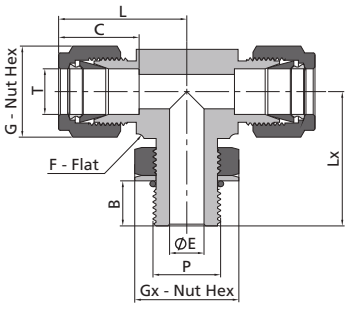

1. The E dimension refers to the smallest nominal orifice. It might be larger at tapered thread end, straight thread end.
2. Adapt to straight thread boss of SAE J1926-1, ISO 11926-1 and MS 16142.

Fractional Tube — **SAE/MS Straight Thread**

T-Tube O.D. (in.)	P-SAE Nominal Size	P-SAE/MS Thread Specification	Basic Ordering Number	Dimensions, in. (mm)							
				L	B	C	E	G	F	Lx	Gx
1/4	4	7/16-20	-TTP-FL4-ST7	1.12(28.5)	0.39(9.9)	0.60(15.2)	0.19(4.8)	0.56(14.3)	0.50(12.7)	1.06(27.0)	0.56(14.3)
3/8	6	9/16-18	-TTP-FL6-ST9	1.26(32.0)	0.44(11.2)	0.66(16.8)	0.28(7.1)	0.69(17.5)	0.63(15.9)	1.27(32.3)	0.69(17.5)
1/2	8	3/4-16	-TTP-FL8-ST12	1.48(37.6)	0.50(12.7)	0.90(22.9)	0.41(10.4)	0.87(22.2)	0.81(20.6)	1.49(37.8)	0.87(22.2)
3/4	12	1 1/16-12	-TTP-FL12-ST17	1.63(41.4)	0.66(16.8)	0.96(24.4)	0.62(15.7)	1.13(28.6)	1.06(27.0)	1.92(48.8)	1.25(31.8)
1	16	1 5/16-12	-TTP-FL16-ST21	1.99(50.5)	0.66(16.8)	1.23(31.2)	0.88(22.4)	1.50(38.1)	1.37(34.9)	2.11(53.6)	1.50(38.1)
1 1/4	20	1 5/8-12	-TTP-FL20-ST26	2.67(67.8)	0.66(16.8)	1.62(41.1)	1.09(27.7)	1.87(47.6)	1.69(42.9)	2.29(58.2)	1.87(47.6)
1 1/2	24	1 7/8-12	-TTP-FL24-ST30	3.07(78.0)	0.66(16.8)	1.97(50.0)	1.34(34.0)	2.25(57.2)	2.00(50.8)	2.38(60.5)	2.13(54.0)

Positionable Male Branch Tees

ISO Parallel Thread

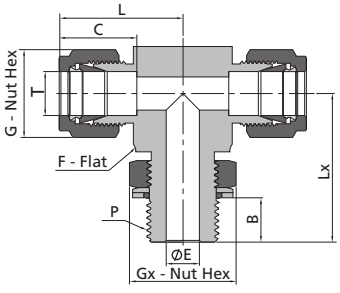

The E dimension refers to the smallest nominal orifice. It might be larger at tapered thread end, straight thread end and welding end.

Fractional Tube — **ISO Parallel Thread (PP)**

T-Tube O.D. (in.)	P-ISO Parallel Thread Size	Basic Ordering Number	Dimensions, in. (mm)							
			L	B	C	E	G	F	Lx	Gx
1/4	1/8	-TTP-FL4-PP2	1.06(26.9)	0.26(6.6)	0.60(15.2)	0.16(4.1)	0.56(14.3)	0.50(12.7)	1.04(26.4)	0.56(14.3)
1/4	1/4	-TTP-FL4-PP4	1.14(29.0)	0.35(9.0)	0.60(15.2)	0.19(4.8)	0.56(14.3)	0.63(15.9)	1.27(32.3)	0.75(19.1)
3/8	1/4	-TTP-FL6-PP4	1.20(30.5)	0.35(9.0)	0.66(16.8)	0.23(5.8)	0.69(17.5)	0.63(15.9)	1.27(32.3)	0.75(19.1)
1/2	3/8	-TTP-FL8-PP6	1.42(36.1)	0.37(9.4)	0.90(22.9)	0.31(7.9)	0.87(22.2)	0.81(20.6)	1.46(37.1)	0.87(22.2)
1/2	1/2	-TTP-FL8-PP8	1.50(38.1)	0.51(13.0)	0.90(22.9)	0.41(10.4)	0.87(22.2)	0.94(23.8)	1.71(43.4)	1.06(27.0)
5/8	1/2	-TTP-FL10-PP8	1.50(38.1)	0.51(13.0)	0.96(24.4)	0.47(11.9)	1.00(25.4)	0.94(23.8)	1.71(43.4)	1.06(27.0)
3/4	1/2	-TTP-FL12-PP8	1.57(39.9)	0.51(13.0)	0.96(24.4)	0.47(11.9)	1.13(28.6)	1.06(27.0)	1.78(45.2)	1.06(27.0)
3/4	3/4	-TTP-FL12-PP12	1.57(39.9)	0.51(13.0)	0.96(24.4)	0.62(15.7)	1.13(28.6)	1.06(27.0)	1.92(48.8)	1.37(34.9)
1	1	-TTP-FL16-PP16	1.93(49.0)	0.52(13.2)	1.23(31.2)	0.78(19.8)	1.50(38.1)	1.37(34.9)	2.11(53.6)	1.63(41.3)

Metric Tube — **ISO Parallel Thread (PP)**

T-Tube O.D. (mm)	P-ISO Parallel Thread Size	Basic Ordering Number	Dimensions, mm (in.)							
			L	B	C	E	G	F	Lx	Gx
6	1/8	-TTP-ML6-PP2	27.0(1.06)	6.6(0.26)	15.3(0.60)	4.0(0.16)	14.0(0.55)	12.7(0.50)	26.4(1.04)	14.3(0.56)
6	1/4	-TTP-ML6-PP4	29.0(1.14)	9.0(0.35)	15.3(0.60)	4.8(0.19)	14.0(0.55)	15.9(0.63)	32.2(1.27)	19.1(0.75)
8	1/8	-TTP-ML8-PP2	28.8(1.13)	6.6(0.26)	16.2(0.64)	4.0(0.16)	16.0(0.63)	14.3(0.56)	27.5(1.08)	14.3(0.56)
8	1/4	-TTP-ML8-PP4	29.9(1.18)	9.0(0.35)	16.2(0.64)	5.9(0.23)	16.0(0.63)	15.9(0.63)	32.2(1.27)	19.1(0.75)
10	1/4	-TTP-ML10-PP4	33.5(1.32)	9.0(0.35)	17.2(0.68)	5.9(0.23)	19.0(0.75)	20.6(0.81)	35.1(1.38)	19.1(0.75)
12	3/8	-TTP-ML12-PP6	36.0(1.42)	9.4(0.37)	22.8(0.90)	7.9(0.31)	22.0(0.87)	20.6(0.81)	37.1(1.46)	22.2(0.87)
12	1/2	-TTP-ML12-PP8	38.0(1.50)	13.0(0.51)	22.8(0.90)	9.5(0.37)	22.0(0.87)	23.8(0.94)	43.5(1.71)	27.0(1.06)

Positionable Male Run Tees

SAE/MS Straight Thread

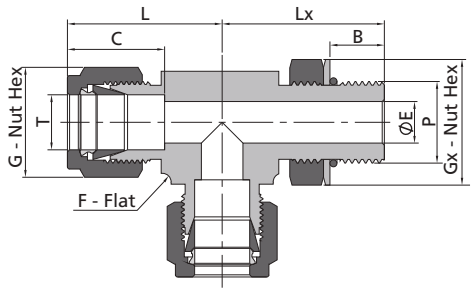

1. The E dimension refers to the smallest nominal orifice. It might be larger at tapered thread end, straight thread end.
2. Adapt to straight thread boss of SAE J1926-1, ISO 11926-1 and MS 16142.

Fractional Tube										SAE/MS Straight Thread
T-Tube O.D. (in.)	P-SAE Nominal Size	P-SAE/MS Thread Specification	Basic Ordering Number	Dimensions, in. (mm)						
				L	B	C	E	G	F	Lx	Gx
1/4	4	7/16-20	-TPT-FL4-ST7	1.12(28.5)	0.39(9.9)	0.60(15.2)	0.19(4.8)	0.56(14.3)	0.50(12.7)	1.06(27.0)	0.56(14.3)
3/8	6	9/16-18	-TPT-FL6-ST9	1.26(32.0)	0.44(11.2)	0.66(16.8)	0.28(7.1)	0.69(17.5)	0.63(15.9)	1.27(32.3)	0.69(17.5)
1/2	8	3/4-16	-TPT-FL8-ST12	1.48(37.6)	0.50(12.7)	0.90(22.9)	0.41(10.4)	0.87(22.2)	0.81(20.6)	1.49(37.8)	0.87(22.2)
3/4	12	1 1/16-12	-TPT-FL12-ST17	1.63(41.4)	0.66(16.8)	0.96(24.4)	0.62(15.7)	1.25(31.75)	1.06(27.0)	1.92(48.8)	1.25(31.8)
1	16	1 5/16-12	-TPT-FL16-ST21	1.99(50.5)	0.66(16.8)	1.23(31.2)	0.88(22.4)	1.50(38.1)	1.37(34.9)	2.11(53.6)	1.50(38.1)
1 1/4	20	1 5/8-12	-TPT-FL20-ST26	2.67(67.8)	0.66(16.8)	1.62(41.1)	1.09(27.7)	1.87(47.6)	1.69(42.9)	2.29(58.2)	1.87(47.6)
1 1/2	24	1 7/8-12	-TPT-FL24-ST30	3.07(78.0)	0.66(16.8)	1.97(50.0)	1.34(34.0)	2.25(57.2)	2.00(50.8)	2.38(60.5)	2.13(54.0)

Positionable Male Run Tees

ISO Parallel Thread

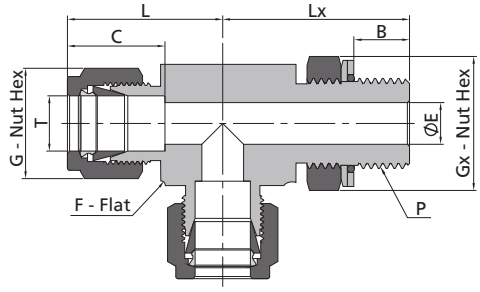

The E dimension refers to the smallest nominal orifice. It might be larger at tapered thread end, straight thread end.

Fractional Tube									ISO Parallel Thread (PP)
T-Tube O.D. (in.)	P-ISO Parallel Thread Size	Basic Ordering Number	Dimensions, in. (mm)						
			L	B	C	E	G	F	Lx	Gx
1/4	1/8	-TPT-FL4-PP2	1.06(26.9)	0.26(6.6)	0.60(15.2)	0.16(4.1)	0.56(14.3)	0.50(12.7)	1.04(26.4)	0.56(14.3)
1/4	1/4	-TPT-FL4-PP4	1.14(29.0)	0.35(9.0)	0.60(15.2)	0.19(4.8)	0.56(14.3)	0.63(15.9)	1.27(32.3)	0.75(19.1)
3/8	1/4	-TPT-FL6-PP4	1.20(30.5)	0.35(9.0)	0.66(16.8)	0.23(5.8)	0.69(17.5)	0.63(15.9)	1.27(32.3)	0.75(19.1)
1/2	3/8	-TPT-FL8-PP6	1.42(36.1)	0.37(9.4)	0.90(22.9)	0.31(7.9)	0.87(22.2)	0.81(20.6)	1.46(37.1)	0.87(22.2)
1/2	1/2	-TPT-FL8-PP8	1.50(38.1)	0.51(13.0)	0.90(22.9)	0.41(10.4)	0.87(22.2)	0.94(23.8)	1.71(43.4)	1.06(27.0)
5/8	1/2	-TPT-FL10-PP8	1.50(38.1)	0.51(13.0)	0.96(24.4)	0.47(11.9)	1.00(25.4)	0.94(23.8)	1.71(43.4)	1.06(27.0)
3/4	1/2	-TPT-FL12-PP8	1.57(39.9)	0.51(13.0)	0.96(24.4)	0.47(11.9)	1.13(28.6)	1.06(27.0)	1.78(45.2)	1.06(27.0)
3/4	3/4	-TPT-FL12-PP12	1.57(39.9)	0.51(13.0)	0.96(24.4)	0.62(15.7)	1.13(28.6)	1.06(27.0)	1.92(48.8)	1.37(34.9)
1	1	-TPT-FL16-PP16	1.93(49.0)	0.52(13.2)	1.23(31.2)	0.78(19.8)	1.50(38.1)	1.37(34.9)	2.11(53.6)	1.63(41.3)

Metric Tube									ISO Parallel Thread (PP)
T-Tube O.D. (mm)	P-ISO Parallel Thread Size	Basic Ordering Number	Dimensions, mm (in.)						
			L	B	C	E	G	F	Lx	Gx
6	1/8	-TPT-ML6-PP2	27.0(1.06)	6.6(0.26)	15.3(0.60)	4.0(0.16)	14.0(0.55)	12.7(0.50)	26.4(1.04)	14.3(0.56)
6	1/4	-TPT-ML6-PP4	29.0(1.14)	9.0(0.35)	15.3(0.60)	4.8(0.19)	14.0(0.55)	15.9(0.63)	32.2(1.27)	19.1(0.75)
8	1/8	-TPT-ML8-PP2	28.8(1.13)	6.6(0.26)	16.2(0.64)	4.0(0.16)	16.0(0.63)	14.3(0.56)	27.5(1.08)	14.3(0.56)
8	1/4	-TPT-ML8-PP4	29.9(1.18)	9.0(0.35)	16.2(0.64)	5.9(0.23)	16.0(0.63)	15.9(0.63)	32.2(1.27)	19.1(0.75)
10	1/4	-TPT-ML10-PP4	33.5(1.32)	9.0(0.35)	17.2(0.68)	5.9(0.23)	19.0(0.75)	20.6(0.81)	35.1(1.38)	19.1(0.75)
12	3/8	-TPT-ML12-PP6	36.0(1.42)	9.4(0.37)	22.8(0.90)	7.9(0.31)	22.0(0.87)	20.6(0.81)	37.1(1.46)	22.2(0.87)
12	1/2	-TPT-ML12-PP8	38.0(1.50)	13.0(0.51)	22.8(0.90)	9.5(0.37)	22.0(0.87)	23.8(0.94)	43.5(1.71)	27.0(1.06)

Female Branch Tees

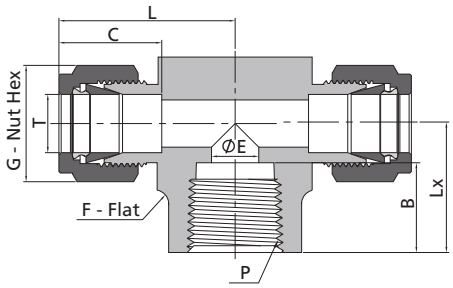

Fractional Tube									NPT Thread
T-Tube O.D. (in.)	P-NPT Size	Basic Ordering Number	Dimensions, in. (mm)						
			L	C	G	F	E	B	Lx
1/8	1/8	-TTF-FL2-NS2	0.97(24.6)	0.50(12.7)	0.44(11.1)	0.50(12.7)	0.09(2.3)	0.41(10.4)	0.75(19.1)
3/16	1/8	-TTF-FL3-NS2	1.01(25.7)	0.54(13.7)	0.50(12.7)	0.50(12.7)	0.12(3.0)	0.41(10.4)	0.75(19.1)
1/4	1/8	-TTF-FL4-NS2	1.06(26.9)	0.60(15.2)	0.56(14.3)	0.50(12.7)	0.19(4.8)	0.41(10.4)	0.75(19.1)
1/4	1/4	-TTF-FL4-NS4	1.17(29.7)	0.60(15.2)	0.56(14.3)	0.69(17.5)	0.19(4.8)	0.59(15.0)	0.88(22.4)
5/16	1/8	-TTF-FL5-NS2	1.17(29.7)	0.64(16.2)	0.63(15.9)	0.63(15.9)	0.25(6.4)	0.41(10.4)	0.75(19.1)
3/8	1/4	-TTF-FL6-NS4	1.23(31.2)	0.66(16.8)	0.69(17.5)	0.69(17.5)	0.28(7.1)	0.59(15.0)	0.88(22.4)
3/8	3/8	-TTF-FL6-NS6	1.31(33.3)	0.66(16.8)	0.69(17.5)	0.81(20.6)	0.28(7.1)	0.59(15.0)	0.88(22.4)
3/8	1/2	-TTF-FL6-NS8	1.42(36.1)	0.66(16.8)	0.69(17.5)	1.00(25.4)	0.28(7.1)	0.78(19.8)	1.12(28.4)
1/2	1/4	-TTF-FL8-NS4	1.42(36.1)	0.90(22.9)	0.87(22.2)	0.81(20.6)	0.41(10.4)	0.59(15.0)	0.88(22.4)
1/2	3/8	-TTF-FL8-NS6	1.42(36.1)	0.90(22.9)	0.87(22.2)	0.81(20.6)	0.41(10.4)	0.59(15.0)	0.88(22.4)
1/2	1/2	-TTF-FL8-NS8	1.53(38.9)	0.90(22.9)	0.87(22.2)	1.00(25.4)	0.41(10.4)	0.78(19.8)	1.12(28.4)
5/8	1/2	-TTF-FL10-NS8	1.53(38.9)	0.96(24.4)	1.00(25.4)	1.00(25.4)	0.50(12.7)	0.78(19.8)	1.12(28.4)
3/4	3/4	-TTF-FL12-NS12	1.76(44.7)	0.96(24.4)	1.13(28.6)	1.37(34.9)	0.62(15.7)	0.81(20.6)	1.25(31.8)
7/8	3/4	-TTF-FL14-NS12	1.76(44.7)	1.02(25.9)	1.25(31.8)	1.37(34.9)	0.72(18.3)	0.81(20.6)	1.25(31.8)
1	3/4	-TTF-FL16-NS12	1.93(49.0)	1.23(31.2)	1.50(38.1)	1.37(34.9)	0.88(22.4)	0.81(20.6)	1.25(31.8)
1	1	-TTF-FL16-NS16	2.11(53.6)	1.23(31.2)	1.50(38.1)	1.69(42.9)	0.88(22.4)	1.00(25.4)	1.50(38.1)

Metric Tube									NPT Thread
T-Tube O.D. (mm)	P-NPT Size	Basic Ordering Number	Dimensions, mm (in.)						
			L	C	G	F	E	B	Lx
6	1/8	-TTF-ML6-NS2	27.0(1.06)	15.3(0.60)	14.0(0.55)	12.7(0.50)	4.8(0.19)	10.4(0.41)	19.0(0.75)
6	1/4	-TTF-ML6-NS4	29.8(1.17)	15.3(0.60)	14.0(0.55)	17.5(0.69)	4.8(0.19)	15.0(0.59)	22.4(0.88)
8	1/8	-TTF-ML8-NS2	29.9(1.18)	16.2(0.64)	16.0(0.63)	15.9(0.63)	6.4(0.25)	10.4(0.41)	19.0(0.75)
8	1/4	-TTF-ML8-NS4	30.6(1.2)	16.2(0.64)	16.0(0.63)	17.5(0.69)	6.4(0.25)	15.0(0.59)	22.4(0.88)
10	1/4	-TTF-ML10-NS4	33.5(1.32)	17.2(0.68)	19.0(0.75)	20.6(0.81)	7.9(0.31)	15.0(0.59)	22.4(0.88)
12	1/8	-TTF-ML12-NS2	36.0(1.42)	22.8(0.90)	22.0(0.87)	20.6(0.81)	6.4(0.25)	10.4(0.41)	22.3(0.88)
12	1/4	-TTF-ML12-NS4	36.0(1.42)	22.8(0.90)	22.0(0.87)	20.6(0.81)	9.5(0.37)	15.0(0.59)	22.4(0.88)
12	3/8	-TTF-ML12-NS6	36.0(1.42)	22.8(0.90)	22.0(0.87)	20.6(0.81)	9.5(0.37)	15.0(0.59)	22.4(0.88)
12	1/2	-TTF-ML12-NS8	38.8(1.53)	22.8(0.90)	22.0(0.87)	25.4(1.00)	9.5(0.37)	19.8(0.78)	28.5(1.12)
16	1/2	-TTF-ML16-NS8	38.8(1.53)	24.4(0.96)	25.0(0.98)	25.4(1.00)	12.7(0.50)	19.8(0.78)	28.4(1.12)

Female Run Tees

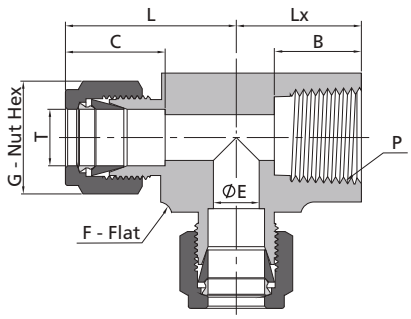

Fractional Tube									NPT Thread
T-Tube O.D. (in.)	P-NPT Size	Basic Ordering Number	Dimensions, in. (mm)						
			L	C	G	F	E	B	Lx
1/8	1/8	-TFT-FL2-NS2	0.97(24.6)	0.50(12.7)	0.44(11.1)	0.50(12.7)	0.09(2.3)	0.41(10.4)	0.75(19.1)
3/16	1/8	-TFT-FL3-NS2	1.01(25.7)	0.54(13.7)	0.50(12.7)	0.50(12.7)	0.12(3.0)	0.41(10.4)	0.75(19.1)
1/4	1/8	-TFT-FL4-NS2	1.06(26.9)	0.60(15.2)	0.56(14.3)	0.50(12.7)	0.19(4.8)	0.41(10.4)	0.75(19.1)
1/4	1/4	-TFT-FL4-NS4	1.17(29.7)	0.60(15.2)	0.56(14.3)	0.69(17.5)	0.19(4.8)	0.59(15.0)	0.88(22.4)
5/16	1/8	-TFT-FL5-NS2	1.17(29.7)	0.64(16.2)	0.63(15.9)	0.63(15.9)	0.25(6.4)	0.41(10.4)	0.75(19.1)
3/8	1/4	-TFT-FL6-NS4	1.23(31.2)	0.66(16.8)	0.69(17.5)	0.69(17.5)	0.28(7.1)	0.59(15.0)	0.88(22.4)
1/2	1/4	-TFT-FL8-NS4	1.42(36.1)	0.90(22.9)	0.87(22.2)	0.81(20.6)	0.41(10.4)	0.59(15.0)	0.88(22.4)
1/2	3/8	-TFT-FL8-NS6	1.42(36.1)	0.90(22.9)	0.87(22.2)	0.81(20.6)	0.41(10.4)	0.59(15.0)	0.88(22.4)
1/2	1/2	-TFT-FL8-NS8	1.57(39.9)	0.90(22.9)	0.87(22.2)	1.06(27.0)	0.41(10.4)	0.78(19.8)	1.12(28.4)
5/8	1/2	-TFT-FL10-NS8	1.57(39.9)	0.96(24.4)	1.00(25.4)	1.06(27.0)	0.50(12.7)	0.78(19.8)	1.12(28.4)
3/4	3/4	-TFT-FL12-NS12	1.76(44.7)	0.96(24.4)	1.13(28.6)	1.37(34.9)	0.62(15.7)	0.81(20.6)	1.25(31.8)
7/8	1/2	-TFT-FL14-NS8	1.76(44.7)	1.02(25.9)	1.25(31.8)	1.37(34.9)	0.62(15.7)	0.78(19.8)	1.12(28.4)
7/8	3/4	-TFT-FL14-NS12	1.76(44.7)	1.02(25.9)	1.25(31.8)	1.37(34.9)	0.72(18.3)	0.81(20.6)	1.25(31.8)
1	3/4	-TFT-FL16-NS12	1.93(49.0)	1.23(31.2)	1.50(38.1)	1.37(34.9)	0.88(22.4)	0.81(20.6)	1.25(31.8)
1	1	-TFT-FL16-NS16	2.11(53.6)	1.23(31.2)	1.50(38.1)	1.69(42.9)	0.88(22.4)	1.00(25.4)	1.50(38.1)

Metric Tube									NPT Thread
T-Tube O.D. (mm)	P-NPT Size	Basic Ordering Number	Dimensions, mm (in.)						
			L	C	G	F	E	B	Lx
6	1/8	-TFT-ML6-NS2	27.0(1.06)	15.3(0.60)	14.0(0.55)	12.7(0.50)	4.8(0.19)	10.4(0.41)	19.0(0.75)
6	1/4	-TFT-ML6-NS4	29.8(1.17)	15.3(0.60)	14.0(0.55)	17.5(0.69)	4.8(0.19)	15.0(0.59)	22.4(0.88)
8	1/8	-TFT-ML8-NS2	29.9(1.18)	16.2(0.64)	16.0(0.63)	15.9(0.63)	6.4(0.25)	10.4(0.41)	19.0(0.75)
8	1/4	-TFT-ML8-NS4	30.6(1.20)	16.2(0.64)	16.0(0.63)	17.5(0.69)	6.4(0.25)	15.0(0.59)	22.4(0.88)
10	1/4	-TFT-ML10-NS4	33.5(1.32)	17.2(0.68)	19.0(0.75)	20.6(0.81)	7.9(0.31)	15.0(0.59)	22.4(0.88)
12	1/4	-TFT-ML12-NS4	36.0(1.42)	22.8(0.90)	22.0(0.87)	20.6(0.81)	9.5(0.37)	15.0(0.59)	22.4(0.88)
12	3/8	-TFT-ML12-NS6	36.0(1.42)	22.8(0.90)	22.0(0.87)	20.6(0.81)	9.5(0.37)	15.0(0.59)	23.1(0.91)
12	1/2	-TFT-ML12-NS8	38.8(1.53)	22.8(0.90)	22.0(0.87)	25.4(1.00)	9.5(0.37)	19.8(0.78)	28.5(1.12)
16	1/2	-TFT-ML16-NS8	39.8(1.57)	24.4(0.96)	25.0(0.98)	27.0(1.06)	12.7(0.50)	19.8(0.78)	28.4(1.12)

Union Tees

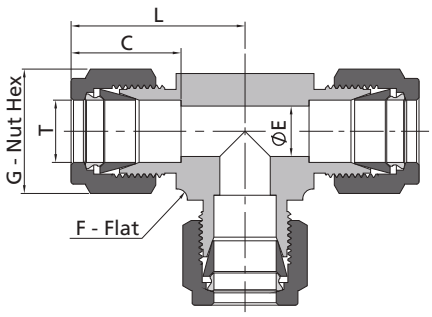

Fractional Tube

T-Tube O.D. (in.)	Basic Ordering Number	Dimensions, in. (mm)				
		L	C	G	F	E
1/16	-TTT-FL1	0.70(17.8)	0.34(8.6)	0.31(7.9)	0.37(9.5)	0.05(1.3)
1/8	-TTT-FL2	0.87(22.2)	0.50(12.7)	0.44(11.1)	0.37(9.5)	0.09(2.3)
3/16	-TTT-FL3	0.96(24.4)	0.54(13.7)	0.50(12.7)	0.44(11.1)	0.12(3.0)
1/4	-TTT-FL4	1.06(26.9)	0.60(15.2)	0.56(14.3)	0.50(12.7)	0.19(4.8)
5/16	-TTT-FL5	1.17(29.7)	0.64(16.2)	0.63(15.9)	0.63(15.9)	0.25(6.4)
3/8	-TTT-FL6	1.20(30.5)	0.66(16.8)	0.69(17.5)	0.63(15.9)	0.28(7.1)
1/2	-TTT-FL8	1.42(36.1)	0.90(22.9)	0.87(22.2)	0.81(20.6)	0.41(10.4)
5/8	-TTT-FL10	1.53(38.9)	0.96(24.4)	1.00(25.4)	1.00(25.4)	0.50(12.7)
3/4	-TTT-FL12	1.57(39.9)	0.96(24.4)	1.13(28.6)	1.06(27.0)	0.62(15.7)
7/8	-TTT-FL14	1.76(44.7)	1.02(25.9)	1.25(31.8)	1.37(34.9)	0.72(18.3)
1	-TTT-FL16	1.93(49.0)	1.23(31.2)	1.50(38.1)	1.37(34.9)	0.88(22.4)
1 1/8	-TTT-FL18	2.63(66.9)	1.44(36.7)	1.75(44.5)	1.69(42.9)	0.97(24.6)
1 1/4	-TTT-FL20	2.62(66.5)	1.62(41.1)	1.87(47.6)	1.69(42.9)	1.09(27.7)
1 1/2	-TTT-FL24	3.07(78.0)	1.97(50.0)	2.25(57.2)	2.00(50.8)	1.34(34.0)

Metric Tube

T-Tube O.D. (mm)	Basic Ordering Number	Dimensions, mm (in.)				
		L	C	G	F	E
2	-TTT-ML2	22.3(0.88)	12.9(0.51)	12.0(0.47)	9.5(0.37)	1.7(0.07)
3	-TTT-ML3	22.3(0.88)	12.9(0.51)	12.0(0.47)	9.5(0.37)	2.4(0.09)
4	-TTT-ML4	25.4(1.00)	13.7(0.54)	12.0(0.47)	12.7(0.50)	2.4(0.09)
6	-TTT-ML6	27.0(1.06)	15.3(0.60)	14.0(0.55)	12.7(0.50)	4.8(0.19)
8	-TTT-ML8	29.9(1.18)	16.2(0.64)	16.0(0.63)	15.9(0.63)	6.4(0.25)
10	-TTT-ML10	31.5(1.24)	17.2(0.68)	19.0(0.75)	17.5(0.69)	7.9(0.31)
12	-TTT-ML12	36.0(1.42)	22.8(0.90)	22.0(0.87)	20.6(0.81)	9.5(0.37)
14	-TTT-ML14	38.8(1.53)	24.4(0.96)	25.0(0.98)	25.4(1.00)	11.1(0.44)
15	-TTT-ML15	38.8(1.53)	24.4(0.96)	25.0(0.98)	25.4(1.00)	11.9(0.47)
16	-TTT-ML16	38.8(1.53)	24.4(0.96)	25.0(0.98)	25.4(1.00)	12.7(0.50)
18	-TTT-ML18	39.8(1.57)	24.4(0.96)	30.0(1.18)	27.0(1.06)	15.1(0.59)
20	-TTT-ML20	44.6(1.76)	26.0(1.02)	32.0(1.26)	34.9(1.37)	15.9(0.63)
22	-TTT-ML22	44.6(1.76)	26.0(1.02)	32.0(1.26)	34.9(1.37)	18.3(0.72)
25	-TTT-ML25	49.1(1.93)	31.3(1.23)	38.0(1.50)	34.9(1.37)	21.8(0.86)
28	-TTT-ML28	64.0(2.52)	36.6(1.44)	46.0(1.81)	42.9(1.69)	21.8(0.86)
30	-TTT-ML30	69.9(2.75)	39.6(1.56)	50.0(1.97)	42.9(1.69)	26.2(1.03)
32	-TTT-ML32	72.3(2.85)	42.0(1.65)	50.0(1.97)	42.9(1.69)	28.6(1.13)
38	-TTT-ML38	84.0(3.31)	49.4(1.94)	60.0(2.36)	50.8(2.00)	33.7(1.33)

Reducing Union Tees

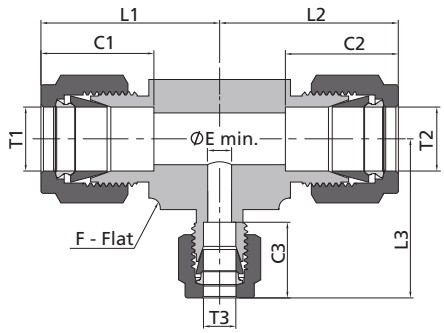

Fractional Tube

T1-Tube O.D. (in.)	T2-Tube O.D. (in.)	T3-Tube O.D. (in.)	Basic Ordering Number	Dimensions, in. (mm)							
				L1	L2	L3	C1	C2	C3	F	E min.
1/4	1/4	1/8	-TTT-FL4-FL4-FL2	1.05(26.7)	1.05(26.7)	0.96(24.4)	0.60(15.2)	0.60(15.2)	0.50(12.7)	0.50(12.7)	0.09(2.3)
3/8	1/4	1/4	-TTT-FL6-FL4-FL4	1.20(30.5)	1.14(29.0)	1.14(29.0)	0.66(16.8)	0.60(15.2)	0.60(15.2)	0.63(15.9)	0.19(4.8)
3/8	1/4	3/8	-TTT-FL6-FL4-FL6	1.20(30.5)	1.14(29.0)	1.20(30.5)	0.66(16.8)	0.60(15.2)	0.66(16.8)	0.63(15.9)	0.19(4.8)
3/8	3/8	1/4	-TTT-FL6-FL6-FL4	1.20(30.5)	1.20(30.5)	1.14(29.0)	0.66(16.8)	0.66(16.8)	0.60(15.2)	0.63(15.9)	0.19(4.8)
1/2	1/4	1/4	-TTT-FL8-FL4-FL4	1.42(36.1)	1.22(30.9)	1.22(30.9)	0.90(22.9)	0.60(15.2)	0.60(15.2)	0.81(20.6)	0.19(4.8)
1/2	1/4	1/2	-TTT-FL8-FL4-FL8	1.42(36.1)	1.25(31.8)	1.42(36.1)	0.90(22.9)	0.60(15.2)	0.90(22.9)	0.81(20.6)	0.19(4.8)
1/2	3/8	3/8	-TTT-FL8-FL6-FL6	1.42(36.1)	1.31(33.3)	1.31(33.3)	0.90(22.9)	0.66(16.8)	0.66(16.8)	0.81(20.6)	0.28(7.1)
1/2	3/8	1/2	-TTT-FL8-FL6-FL8	1.42(36.1)	1.31(33.3)	1.42(36.1)	0.90(22.9)	0.66(16.8)	0.90(22.9)	0.81(20.6)	0.28(7.1)
1/2	1/2	1/4	-TTT-FL8-FL8-FL4	1.42(36.1)	1.42(36.1)	1.25(31.8)	0.90(22.9)	0.90(22.9)	0.60(15.2)	0.81(20.6)	0.19(4.8)
1/2	1/2	3/8	-TTT-FL8-FL8-FL6	1.42(36.1)	1.42(36.1)	1.31(33.3)	0.90(22.9)	0.90(22.9)	0.66(16.8)	0.81(20.6)	0.28(7.1)
5/8	3/8	3/8	-TTT-FL10-FL6-FL6	1.53(38.9)	1.42(36.1)	1.42(36.1)	0.96(24.4)	0.66(16.8)	0.66(16.8)	1.00(25.4)	0.28(7.1)
5/8	1/2	1/2	-TTT-FL10-FL8-FL8	1.53(38.9)	1.53(38.9)	1.53(38.9)	0.96(24.4)	0.90(22.9)	0.90(22.9)	1.00(25.4)	0.41(10.4)
5/8	5/8	3/8	-TTT-FL10-FL10-FL6	1.53(38.9)	1.53(38.9)	1.42(36.1)	0.96(24.4)	0.96(24.4)	0.66(16.8)	1.00(25.4)	0.28(7.1)
5/8	5/8	1/2	-TTT-FL10-FL10-FL8	1.53(38.9)	1.53(38.9)	1.53(38.9)	0.96(24.4)	0.96(24.4)	0.90(22.9)	1.00(25.4)	0.41(10.4)
3/4	3/8	3/8	-TTT-FL12-FL6-FL6	1.56(39.6)	1.45(36.9)	1.45(36.9)	0.96(24.4)	0.66(16.8)	0.66(16.8)	1.06(27.0)	0.28(7.1)
3/4	1/2	1/2	-TTT-FL12-FL8-FL8	1.56(39.6)	1.56(39.6)	1.56(39.6)	0.96(24.4)	0.90(22.9)	0.90(22.9)	1.06(27.0)	0.41(10.4)
3/4	5/8	5/8	-TTT-FL12-FL10-FL10	1.56(39.6)	1.56(39.6)	1.56(39.6)	0.96(24.4)	0.96(24.4)	0.96(24.4)	1.06(27.0)	0.50(12.7)
3/4	3/4	1/4	-TTT-FL12-FL12-FL4	1.56(39.6)	1.56(39.6)	1.43(36.3)	0.96(24.4)	0.96(24.4)	0.60(15.2)	1.06(27.0)	0.19(4.8)
3/4	3/4	3/8	-TTT-FL12-FL12-FL6	1.56(39.6)	1.56(39.6)	1.45(36.9)	0.96(24.4)	0.96(24.4)	0.66(16.8)	1.06(27.0)	0.28(7.1)
3/4	3/4	1/2	-TTT-FL12-FL12-FL8	1.56(39.6)	1.56(39.6)	1.56(39.6)	0.96(24.4)	0.96(24.4)	0.90(22.9)	1.06(27.0)	0.41(10.4)
3/4	3/4	5/8	-TTT-FL12-FL12-FL10	1.56(39.6)	1.56(39.6)	1.56(39.6)	0.96(24.4)	0.96(24.4)	0.96(24.4)	1.06(27.0)	0.50(12.7)
7/8	3/4	3/4	-TTT-FL14-FL12-FL12	1.76(44.7)	1.76(44.7)	1.76(44.7)	1.02(25.9)	0.96(24.4)	0.96(24.4)	1.37(34.9)	0.62(15.7)
7/8	7/8	1/4	-TTT-FL14-FL14-FL4	1.76(44.7)	1.76(44.7)	1.59(40.4)	1.02(25.9)	1.02(25.9)	0.60(15.2)	1.37(34.9)	0.19(4.8)
7/8	7/8	3/8	-TTT-FL14-FL14-FL6	1.76(44.7)	1.76(44.7)	1.65(41.9)	1.02(25.9)	1.02(25.9)	0.66(16.8)	1.37(34.9)	0.28(7.1)
1	3/8	3/8	-TTT-FL16-FL6-FL6	1.94(49.3)	1.65(41.9)	1.65(41.9)	1.23(31.2)	0.66(16.8)	0.66(16.8)	1.37(34.9)	0.28(7.1)
1	1/2	1/2	-TTT-FL16-FL8-FL8	1.94(49.3)	1.76(44.7)	1.76(44.7)	1.23(31.2)	0.90(22.9)	0.90(22.9)	1.37(34.9)	0.41(10.4)
1	1/2	1	-TTT-FL16-FL8-FL16	1.94(49.3)	1.76(44.7)	1.94(49.3)	1.23(31.2)	0.90(22.9)	1.23(31.2)	1.37(34.9)	0.41(10.4)
1	3/4	1	-TTT-FL16-FL12-FL16	1.94(49.3)	1.76(44.7)	1.94(49.3)	1.23(31.2)	0.96(24.4)	1.23(31.2)	1.37(34.9)	0.62(15.7)
1	7/8	7/8	-TTT-FL16-FL14-FL14	1.94(49.3)	1.76(44.7)	1.76(44.7)	1.23(31.2)	1.02(25.9)	1.02(25.9)	1.37(34.9)	0.72(18.3)
1	1	1/4	-TTT-FL16-FL16-FL4	1.94(49.3)	1.94(49.3)	1.59(40.4)	1.23(31.2)	1.23(31.2)	0.60(15.2)	1.37(34.9)	0.19(4.8)
1	1	3/8	-TTT-FL16-FL16-FL6	1.94(49.3)	1.94(49.3)	1.65(41.9)	1.23(31.2)	1.23(31.2)	0.66(16.8)	1.37(34.9)	0.28(7.1)
1	1	1/2	-TTT-FL16-FL16-FL8	1.94(49.3)	1.94(49.3)	1.76(44.7)	1.23(31.2)	1.23(31.2)	0.90(22.9)	1.37(34.9)	0.41(10.4)
1	1	5/8	-TTT-FL16-FL16-FL10	1.94(49.3)	1.94(49.3)	1.76(44.7)	1.23(31.2)	1.23(31.2)	0.96(24.4)	1.37(34.9)	0.50(12.7)
1	1	3/4	-TTT-FL16-FL16-FL12	1.94(49.3)	1.94(49.3)	1.76(44.7)	1.23(31.2)	1.23(31.2)	0.96(24.4)	1.37(34.9)	0.62(15.7)
1	1	7/8	-TTT-FL16-FL16-FL14	1.94(49.3)	1.94(49.3)	1.76(44.7)	1.23(31.2)	1.23(31.2)	1.02(25.9)	1.37(34.9)	0.72(18.3)
1 1/4	1 1/4	1	-TTT-FL20-FL20-FL16	2.67(67.8)	2.67(67.8)	2.17(55.1)	1.62(41.2)	1.62(41.2)	1.23(31.3)	1.69(42.9)	0.88(22.4)
1 1/2	1 1/2	1	-TTT-FL24-FL24-FL16	3.10(78.7)	3.10(78.7)	2.36(60.0)	1.97(50.0)	1.97(50.0)	1.23(31.3)	2.00(50.8)	0.88(22.4)

Reducing Union Tees

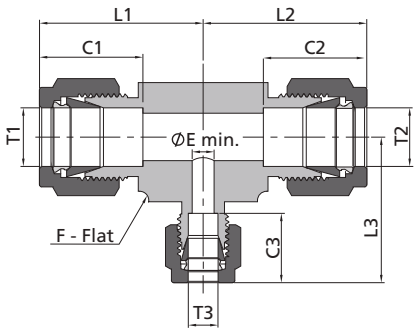

Metric Tube

T1-Tube O.D. (mm)	T2-Tube O.D. (mm)	T3-Tube O.D. (mm)	Basic Ordering Number	Dimensions, mm (in.)							
				L1	L2	L3	C1	C2	C3	F	E min.
3	3	6	-TTT-ML3-ML3-ML6	24.7(0.97)	24.7(0.97)	27.0(1.06)	12.9(0.51)	12.9(0.51)	15.3(0.60)	12.7(0.50)	2.4(0.09)
6	6	3	-TTT-ML6-ML6-ML3	27.0(1.06)	27.0(1.06)	24.7(0.97)	15.3(0.60)	15.3(0.60)	12.9(0.51)	12.7(0.50)	2.4(0.09)
6	6	8	-TTT-ML6-ML6-ML8	28.0(1.10)	28.0(1.10)	28.8(1.13)	15.3(0.60)	15.3(0.60)	16.2(0.64)	14.3(0.56)	4.8(0.19)
8	8	6	-TTT-ML8-ML8-ML6	30.0(1.18)	30.0(1.18)	29.0(1.14)	16.2(0.64)	16.2(0.64)	15.3(0.60)	15.9(0.63)	4.8(0.19)
8	8	12	-TTT-ML8-ML8-ML12	35.2(1.39)	35.2(1.39)	36.0(1.42)	16.2(0.64)	16.2(0.64)	22.8(0.90)	20.6(0.81)	6.4(0.25)
10	10	6	-TTT-ML10-ML10-ML6	31.5(1.24)	31.5(1.24)	29.9(1.18)	17.2(0.68)	17.2(0.68)	15.3(0.60)	17.5(0.69)	4.8(0.19)
10	10	8	-TTT-ML10-ML10-ML8	31.5(1.24)	31.5(1.24)	30.7(1.21)	17.2(0.68)	17.2(0.68)	16.2(0.64)	17.5(0.69)	6.4(0.25)
12	12	6	-TTT-ML12-ML12-ML6	36.0(1.42)	36.0(1.42)	31.8(1.25)	22.8(0.90)	22.8(0.90)	15.3(0.60)	20.6(0.81)	4.8(0.19)
12	12	8	-TTT-ML12-ML12-ML8	36.0(1.42)	36.0(1.42)	32.0(1.26)	22.8(0.90)	22.8(0.90)	16.2(0.64)	20.6(0.81)	6.4(0.25)
12	12	14	-TTT-ML12-ML12-ML14	38.0(1.50)	38.0(1.50)	38.0(1.50)	22.8(0.90)	22.8(0.90)	24.4(0.96)	25.4(1.00)	9.5(0.37)
12	12	18	-TTT-ML12-ML12-ML18	39.8(1.57)	39.8(1.57)	39.8(1.57)	22.8(0.90)	22.8(0.90)	24.4(0.96)	27.0(1.06)	9.5(0.37)
14	14	8	-TTT-ML14-ML14-ML8	38.0(1.50)	38.0(1.50)	35.5(1.40)	24.4(0.96)	24.4(0.96)	16.2(0.64)	25.4(1.00)	6.4(0.25)
14	14	10	-TTT-ML14-ML14-ML10	38.0(1.50)	38.0(1.50)	36.7(1.44)	24.4(0.96)	24.4(0.96)	17.2(0.68)	25.4(1.00)	7.9(0.31)
15	15	12	-TTT-ML15-ML15-ML12	38.8(1.53)	38.8(1.53)	38.8(1.53)	24.4(0.96)	24.4(0.96)	22.8(0.90)	25.4(1.00)	9.5(0.37)
16	8	16	-TTT-ML16-ML8-ML16	38.8(1.53)	35.5(1.40)	38.8(1.53)	24.4(0.96)	16.2(0.64)	24.4(0.96)	25.4(1.00)	6.4(0.25)
16	16	12	-TTT-ML16-ML16-ML12	38.8(1.53)	38.8(1.53)	38.9(1.53)	24.4(0.96)	24.4(0.96)	22.8(0.90)	25.4(1.00)	9.5(0.37)
18	18	8	-TTT-ML18-ML18-ML8	39.8(1.57)	39.8(1.57)	39.0(1.54)	24.4(0.96)	24.4(0.96)	16.2(0.64)	27.0(1.06)	6.4(0.25)
18	18	10	-TTT-ML18-ML18-ML10	39.8(1.57)	39.8(1.57)	37.4(1.47)	24.4(0.96)	24.4(0.96)	17.2(0.68)	27.0(1.06)	7.9(0.31)
18	18	12	-TTT-ML18-ML18-ML12	39.8(1.57)	39.8(1.57)	39.8(1.57)	24.4(0.96)	24.4(0.96)	22.8(0.90)	27.0(1.06)	9.5(0.37)
18	18	14	-TTT-ML18-ML18-ML14	39.8(1.57)	39.8(1.57)	39.8(1.57)	24.4(0.96)	24.4(0.96)	24.4(0.96)	27.0(1.06)	11.1(0.44)
20	20	14	-TTT-ML20-ML20-ML14	44.6(1.76)	44.6(1.76)	44.6(1.76)	26.0(1.02)	26.0(1.02)	24.4(0.96)	34.9(1.37)	11.1(0.44)
22	22	12	-TTT-ML22-ML22-ML12	44.6(1.76)	44.6(1.76)	44.6(1.76)	26.0(1.02)	26.0(1.02)	22.8(0.90)	34.9(1.37)	9.5(0.37)
25	25	12	-TTT-ML25-ML25-ML12	49.1(1.93)	49.1(1.93)	44.7(1.76)	31.3(1.23)	31.3(1.23)	22.8(0.90)	34.9(1.37)	9.5(0.37)

Union Crosses

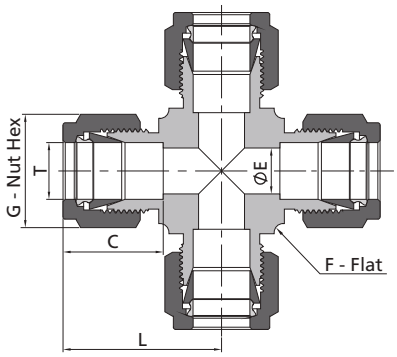

Fractional Tube

T-Tube O.D. (in.)	Basic Ordering Number	Dimensions, in. (mm)				
		L	C	G	F	E
1/8	-C-FL2	0.88(22.4)	0.50(12.7)	0.44(11.1)	0.37(9.5)	0.09(2.3)
3/16	-C-FL3	0.96(24.4)	0.54(13.7)	0.50(12.7)	0.44(11.1)	0.12(3.0)
1/4	-C-FL4	1.06(26.9)	0.60(15.2)	0.56(14.3)	0.50(12.7)	0.19(4.8)
5/16	-C-FL5	1.17(29.7)	0.64(16.2)	0.63(15.9)	0.63(15.9)	0.25(6.4)
3/8	-C-FL6	1.20(30.5)	0.66(16.8)	0.69(17.5)	0.63(15.9)	0.28(7.1)
1/2	-C-FL8	1.42(36.1)	0.90(22.9)	0.87(22.2)	0.81(20.6)	0.41(10.4)
5/8	-C-FL10	1.53(38.8)	0.96(24.4)	1.00(25.4)	1.0(25.4)	0.50(12.7)
3/4	-C-FL12	1.57(39.9)	0.96(24.4)	1.13(28.6)	1.06(27.0)	0.62(15.7)
7/8	-C-FL14	1.76(44.7)	1.02(25.9)	1.25(31.8)	1.37(34.9)	0.72(18.3)
1	-C-FL16	1.93(49.0)	1.23(31.2)	1.50(38.1)	1.37(34.9)	0.88(22.4)

Metric Tube

T-Tube O.D. (mm)	Basic Ordering Number	Dimensions, mm (in.)				
		L	C	G	F	E
3	-C-ML3	22.3(0.88)	12.9(0.51)	12.0(0.47)	9.5(0.37)	2.4(0.09)
4	-C-ML4	25.4(1.00)	13.7(0.54)	12.0(0.47)	12.7(0.50)	2.4(0.09)
6	-C-ML6	27.0(1.06)	15.3(0.60)	14.0(0.55)	12.7(0.50)	4.8(0.19)
8	-C-ML8	29.9(1.18)	16.2(0.64)	16.0(0.63)	15.9(0.63)	6.4(0.25)
10	-C-ML10	33.5(1.32)	17.2(0.68)	19.0(0.75)	20.6(0.81)	7.9(0.31)
12	-C-ML12	36.0(1.42)	22.8(0.90)	22.0(0.87)	20.6(0.81)	9.5(0.37)
16	-C-ML16	37.0(1.46)	24.4(0.96)	25.0(0.98)	23.8(0.94)	12.7(0.50)
18	-C-ML18	38.3(1.51)	24.4(0.96)	30.0(1.18)	27.0(1.06)	15.1(0.59)
20	-C-ML20	44.6(1.76)	26.0(1.02)	32.0(1.26)	34.9(1.37)	15.9(0.63)
22	-C-ML22	44.7(1.76)	26.0(1.02)	32.0(1.26)	34.9(1.37)	18.3(0.72)
25	-C-ML25	49.2(1.94)	31.3(1.23)	38.0(1.50)	34.9(1.37)	21.8(0.86)

Caps

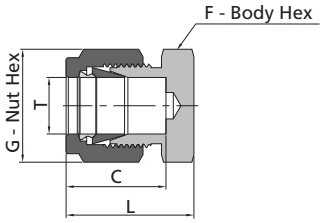

Fractional Tube

T-Tube O.D. (in.)	Basic Ordering Number	Dimensions, in. (mm)			
		L	C	G	F
1/16	-TC-FL1	0.59(15.0)	0.34(8.6)	0.31(7.9)	0.31(7.9)
1/8	-TC-FL2	0.79(20.1)	0.50(12.7)	0.44(11.1)	0.44(11.1)
3/16	-TC-FL3	0.84(21.3)	0.54(13.7)	0.50(12.7)	0.44(11.1)
1/4	-TC-FL4	0.92(23.4)	0.60(15.2)	0.56(14.3)	0.50(12.7)
5/16	-TC-FL5	0.96(24.4)	0.64(16.3)	0.63(15.9)	0.56(14.3)
3/8	-TC-FL6	1.01(25.7)	0.66(16.8)	0.69(17.5)	0.63(15.9)
1/2	-TC-FL8	1.15(29.2)	0.90(22.9)	0.87(22.2)	0.81(20.6)
5/8	-TC-FL10	1.18(30.0)	0.96(24.4)	1.00(25.4)	0.94(23.8)
3/4	-TC-FL12	1.24(31.5)	0.96(24.4)	1.13(28.6)	1.06(27.0)
7/8	-TC-FL14	1.34(34.0)	1.02(25.9)	1.25(31.8)	1.19(30.2)
1	-TC-FL16	1.51(38.4)	1.23(31.2)	1.50(38.1)	1.37(34.9)
1 1/8	-TC-FL18	1.51(38.4)	1.44(36.7)	1.75(44.5)	1.63(41.3)
1 1/4	-TC-FL20	2.10(53.3)	1.62(41.1)	1.87(47.6)	1.75(44.5)
1 1/2	-TC-FL24	2.54(64.5)	1.97(50.0)	2.25(57.2)	2.13(54.0)

Metric Tube

T-Tube O.D. (mm)	Basic Ordering Number	Dimensions, mm (in.)			
		L	C	G	F
2	-TC-ML2	20.1(0.79)	12.9(0.51)	12.0(0.47)	12.0(0.47)
3	-TC-ML3	20.1(0.79)	12.9(0.51)	12.0(0.47)	12.0(0.47)
4	-TC-ML4	21.3(0.84)	13.7(0.54)	12.0(0.47)	12.0(0.47)
6	-TC-ML6	23.1(0.91)	15.3(0.60)	14.0(0.55)	14.0(0.55)
8	-TC-ML8	24.5(0.96)	16.2(0.64)	16.0(0.63)	15.0(0.59)
10	-TC-ML10	26.6(1.05)	17.2(0.68)	19.0(0.75)	18.0(0.71)
12	-TC-ML12	29.1(1.15)	22.8(0.90)	22.0(0.87)	22.0(0.87)
14	-TC-ML14	29.9(1.18)	24.4(0.96)	25.0(0.98)	24.0(0.94)
15	-TC-ML15	29.9(1.18)	24.4(0.96)	25.0(0.98)	24.0(0.94)
16	-TC-ML16	29.9(1.18)	24.4(0.96)	25.0(0.98)	24.0(0.94)
18	-TC-ML18	31.4(1.24)	24.4(0.96)	30.0(1.18)	27.0(1.06)
20	-TC-ML20	34.0(1.34)	26.0(1.02)	32.0(1.26)	30.0(1.18)
22	-TC-ML22	34.0(1.34)	26.0(1.02)	32.0(1.26)	30.0(1.18)
25	-TC-ML25	38.5(1.52)	31.3(1.23)	38.0(1.50)	35.0(1.38)
28	-TC-ML28	48.5(1.91)	36.6(1.44)	46.0(1.81)	41.0(1.61)
30	-TC-ML30	53.4(2.10)	39.6(1.56)	50.0(1.97)	46.0(1.81)
32	-TC-ML32	55.8(2.20)	42.0(1.65)	50.0(1.97)	46.0(1.81)
38	-TC-ML38	65.4(2.57)	49.4(1.94)	60.0(2.36)	55.0(2.17)

Plugs

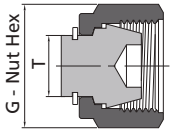

Fractional Tube		
T-Tube O.D. (in.)	Basic Ordering Number	Dimensions, in. (mm)
		G
1/16	-TP-FL1	0.31(7.9)
1/8	-TP-FL2	0.44(11.1)
3/16	-TP-FL3	0.50(12.7)
1/4	-TP-FL4	0.56(14.3)
5/16	-TP-FL5	0.63(15.9)
3/8	-TP-FL6	0.69(17.5)
1/2	-TP-FL8	0.87(22.2)
5/8	-TP-FL10	1.00(25.4)
3/4	-TP-FL12	1.13(28.6)
7/8	-TP-FL14	1.25(31.8)
1	-TP-FL16	1.50(38.1)
1 1/4	-TP-FL20	1.87(47.6)
1 1/2	-TP-FL24	2.25(57.2)

Metric Tube		
T-Tube O.D. (mm)	Basic Ordering Number	Dimensions, mm (in.)
		G
2	-TP-ML2	12.0(0.47)
3	-TP-ML3	12.0(0.47)
4	-TP-ML4	12.0(0.47)
6	-TP-ML6	14.0(0.55)
8	-TP-ML8	16.0(0.63)
10	-TP-ML10	19.0(0.75)
12	-TP-ML12	22.0(0.87)
14	-TP-ML14	25.0(0.98)
15	-TP-ML15	25.0(0.98)
16	-TP-ML16	25.0(0.98)
18	-TP-ML18	30.0(1.18)
20	-TP-ML20	32.0(1.26)
22	-TP-ML22	32.0(1.26)
25	-TP-ML25	38.0(1.50)
28	-TP-ML28	46.0(1.81)
30	-TP-ML30	50.0(1.97)
32	-TP-ML32	50.0(1.97)
38	-TP-ML38	60.0(2.36)

Vent Protectors

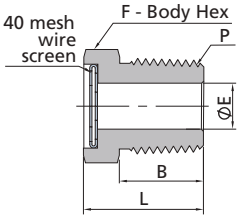

40 mesh 300 series stainless steel wire screen assembly

NPT Thread					
P-NPT Size	Ordering Number	Dimensions, in. (mm)			
		L	F	B	E
1/8	-VPF-NS2	0.56(14.2)	0.50(12.7)	0.38(9.7)	0.19(4.8)
1/4	-VPF-NS4	0.78(19.8)	0.56(14.3)	0.56(14.2)	0.28(7.1)
3/8	-VPF-NS6	0.81(20.6)	0.69(17.5)	0.56(14.2)	0.41(10.4)
1/2	-VPF-NS8	1.03(26.2)	0.87(22.2)	0.75(19.1)	0.50(12.7)
3/4	-VPF-NS12	1.06(26.9)	1.06(27.0)	0.76(19.2)	0.72(18.3)
1	-VPF-NS16	1.37(34.8)	1.37(34.9)	0.94(23.9)	0.88(22.4)

To order brass, replace SS in the ordering number with B
Example: B-VPF-NS2

Lapped Flange Connectors

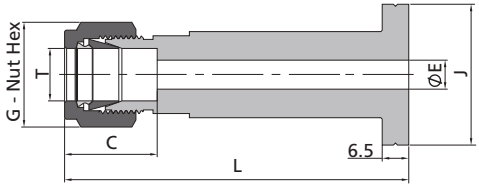

- Standard material is 316 or Monel.
- The flange ends are used with NPS 1/2 lap joint pipe flanges.
- The flange ends are dimensioned to meet "ASME B16.5 Class 2500" flange specifications.
- The Flange Seal A means surface finish Ra 3.2-6.3 μm, the flange Seal B means Ra 6.3-12.5 μm.

Fractional Tube							
T-Tube O.D. (in.)	Flange Seal	Basic Ordering Number	Dimensions, in. (mm)				
			L	G	C	E	J
1/4	A	-LFC-FL4A	3.18(80.8)	0.56(14.3)	0.60(15.2)	0.19(4.8)	1.36(34.5)
1/4	B	-LFC-FL4B	3.18(80.8)	0.56(14.3)	0.60(15.2)	0.19(4.8)	1.36(34.5)
3/8	A	-LFC-FL6A	3.24(82.3)	0.69(17.5)	0.66(16.8)	0.28(7.1)	1.36(34.5)
3/8	B	-LFC-FL6B	3.24(82.3)	0.69(17.5)	0.66(16.8)	0.28(7.1)	1.36(34.5)
1/2	A	-LFC-FL8A	3.35(85.1)	0.87(22.2)	0.90(22.9)	0.31(7.9)	1.36(34.5)
1/2	B	-LFC-FL8B	3.35(85.1)	0.87(22.2)	0.90(22.9)	0.31(7.9)	1.36(34.5)

Metric Tube							
T-Tube O.D. (mm)	Flange Seal	Basic Ordering Number	Dimensions, mm (in.)				
			L	G	C	E	J
10	A	-LFC-ML10A	82.6(3.25)	19.0(0.75)	17.2(0.68)	7.9(0.31)	34.5(1.36)
10	B	-LFC-ML10B	82.6(3.25)	19.0(0.75)	17.2(0.68)	7.9(0.31)	34.5(1.36)

Female Nuts

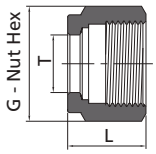

Fractional Tube			
T-Tube O.D. (in.)	Basic Ordering Number	Dimensions, in. (mm)	
		L	G
1/16	-N-FL1	0.31(7.9)	0.31(7.9)
1/8	-N-FL2	0.47(11.9)	0.44(11.1)
3/16	-N-FL3	0.47(11.9)	0.50(12.7)
1/4	-N-FL4	0.50(12.7)	0.56(14.3)
5/16	-N-FL5	0.53(13.5)	0.63(15.9)
3/8	-N-FL6	0.56(14.2)	0.69(17.5)
1/2	-N-FL8	0.69(17.5)	0.87(22.2)
5/8	-N-FL10	0.69(17.5)	1.00(25.4)
3/4	-N-FL12	0.69(17.5)	1.13(28.6)
7/8	-N-FL14	0.69(17.5)	1.25(31.8)
1	-N-FL16	0.81(20.6)	1.50(38.1)
1 1/8	-N-FL18	1.21(30.8)	1.75(44.5)
1 1/4	-N-FL20	1.25(31.8)	1.87(47.6)
1 1/2	-N-FL24	1.50(38.1)	2.25(57.2)

Metric Tube			
T-Tube O.D. (mm)	Basic Ordering Number	Dimensions, mm (in.)	
		L	G
2	-N-ML2	11.9(0.47)	12.0(0.47)
3	-N-ML3	11.9(0.47)	12.0(0.47)
4	-N-ML4	11.9(0.47)	12.0(0.47)
6	-N-ML6	12.7(0.50)	14.0(0.55)
8	-N-ML8	13.5(0.53)	16.0(0.63)
10	-N-ML10	15.1(0.59)	19.0(0.75)
12	-N-ML12	17.4(0.69)	22.0(0.87)
14	-N-ML14	17.4(0.69)	25.0(0.98)
15	-N-ML15	17.4(0.69)	25.0(0.98)
16	-N-ML16	17.4(0.69)	25.0(0.98)
18	-N-ML18	17.4(0.69)	30.0(1.18)
20	-N-ML20	17.4(0.69)	32.0(1.26)
22	-N-ML22	17.4(0.69)	32.0(1.26)
25	-N-ML25	20.6(0.81)	38.0(1.50)
28	-N-ML28	30.6(1.20)	46.0(1.81)
30	-N-ML30	32.7(1.29)	50.0(1.97)
32	-N-ML32	34.4(1.35)	50.0(1.97)
38	-N-ML38	40.6(1.60)	60.0(2.36)

Knurled Nuts

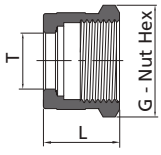

To order a knurled nut add -**K** to the nut ordering number.
Example: B-**K**N-FL4

Male Nuts

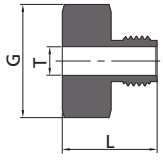

Fractional Tube			
T-Tube O.D. (in.)	Basic Ordering Number	Dimensions, in. (mm)	
		L	G
1/16	-MN-FL1	0.38(9.7)	0.25(6.4)
1/8	-MN-FL2	0.53(13.5)	0.37(9.5)
1/4	-MN-FL4	0.62(15.7)	0.50(12.7)
1/2	-MN-FL8	0.87(22.1)	0.94(23.8)

Metric Tube			
T-Tube O.D. (mm)	Basic Ordering Number	Dimensions, mm (in.)	
		L	G
3	-MN-ML3	13.5(0.53)	10.0(0.39)
6	-MN-ML6	15.7(0.62)	14.0(0.55)
10	-MN-ML10	22.1(0.87)	22.0(0.87)
12	-MN-ML12	22.1(0.87)	24.0(0.94)

Applicable to female tube fittings, such as column end fittings.

Assembly Diagram

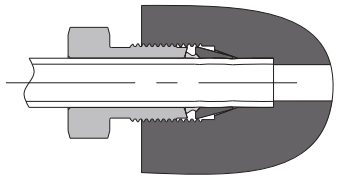

◎ Assembly Method

1. Please see Installation Instructions - Manual Instructions, page 12.
2. Not applicable to installation with a manual presetting tool or a hydraulic presetting tool.
3. Not applicable to testing with a gap inspection gauge.

Front Ferrules

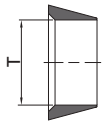

Fractional Tube	
T-Tube O.D. (in.)	Basic Ordering Number
1/16	-FF-FL1
1/8	-FF-FL2
3/16	-FF-FL3
1/4	-FF-FL4
5/16	-FF-FL5
3/8	-FF-FL6
1/2	-FF-FL8
5/8	-FF-FL10
3/4	-FF-FL12
7/8	-FF-FL14
1	-FF-FL16
1 1/8	-FF-FL18
1 1/4	-FF-FL20
1 1/2	-FF-FL24

Metric Tube	
T-Tube O.D. (mm)	Basic Ordering Number
2	-FF-ML2
3	-FF-ML3
4	-FF-ML4
6	-FF-ML6
8	-FF-ML8
10	-FF-ML10
12	-FF-ML12
14	-FF-ML14
15	-FF-ML15
16	-FF-ML16
18	-FF-ML18
20	-FF-ML20
22	-FF-ML22
25	-FF-ML25
28	-FF-ML28
30	-FF-ML30
32	-FF-ML32
38	-FF-ML38

Rear Ferrules

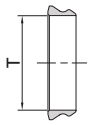

Fractional Tube	
T-Tube O.D. (in.)	Basic Ordering Number
1/16	-RF-FL1
1/8	-RF-FL2
3/16	-RF-FL3
1/4	-RF-FL4
5/16	-RF-FL5
3/8	-RF-FL6
1/2	-RF-FL8
5/8	-RF-FL10
3/4	-RF-FL12
7/8	-RF-FL14
1	-RF-FL16
1 1/8	-RF-FL18
1 1/4	-RF-FL20
1 1/2	-RF-FL24

Metric Tube	
T-Tube O.D. (mm)	Basic Ordering Number
2	-RF-ML2
3	-RF-ML3
4	-RF-ML4
6	-RF-ML6
8	-RF-ML8
10	-RF-ML10
12	-RF-ML12
14	-RF-ML14
15	-RF-ML15
16	-RF-ML16
18	-RF-ML18
20	-RF-ML20
22	-RF-ML22
25	-RF-ML25
28	-RF-ML28
30	-RF-ML30
32	-RF-ML32
38	-RF-ML38

Notes:
1. Stainless steel front ferrules over 1 in. or 25 mm are silver plated.
2. In addition to the metal ferrules, PTFE and nylon ferrules are also available, please contact FITOK Group or our authorized distributors.

Nut-Ferrule Sets



The nut-ferrule set contains 1 nut, 1 rear ferrule and 1 front ferrule.

Fractional Tube	
T-Tube O.D. (in.)	Basic Ordering Number
1/16	-NFS-FL1
1/8	-NFS-FL2
3/16	-NFS-FL3
1/4	-NFS-FL4
5/16	-NFS-FL5
3/8	-NFS-FL6
1/2	-NFS-FL8
5/8	-NFS-FL10
3/4	-NFS-FL12

Metric Tube	
T-Tube O.D. (mm)	Basic Ordering Number
2	-NFS-ML2
3	-NFS-ML3
4	-NFS-ML4
6	-NFS-ML6
8	-NFS-ML8
10	-NFS-ML10
12	-NFS-ML12
14	-NFS-ML14
15	-NFS-ML15
16	-NFS-ML16
18	-NFS-ML18

Please order nut-ferrule sets in multiples of 5.
Figure below shows nut-ferrule sets with the arbor.
One arbor holds 5 nut-ferrule sets.



Ferrule Sets



The ferrule set contains 1 rear ferrule and 1 front ferrule.

Fractional Tube	
T-Tube O.D. (in.)	Basic Ordering Number
1/16	-FRS-FL1
1/8	-FRS-FL2
3/16	-FRS-FL3
1/4	-FRS-FL4
5/16	-FRS-FL5
3/8	-FRS-FL6
1/2	-FRS-FL8
5/8	-FRS-FL10
3/4	-FRS-FL12

Metric Tube	
T-Tube O.D. (mm)	Basic Ordering Number
2	-FRS-ML2
3	-FRS-ML3
4	-FRS-ML4
6	-FRS-ML6
8	-FRS-ML8
10	-FRS-ML10
12	-FRS-ML12
14	-FRS-ML14
15	-FRS-ML15
16	-FRS-ML16
18	-FRS-ML18

Please order ferrule sets in multiples of 10.
Figure below shows ferrule sets with the arbor.
One arbor holds 10 ferrule sets.



Reducers

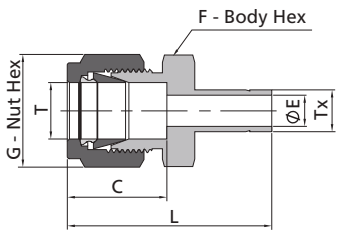

1" and below

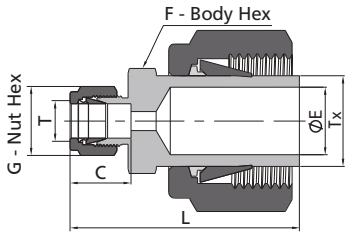

1 1/4" and above

Fractional Tube

T-Tube O.D. (in.)	Tx-Tube O.D. (in.)	Basic Ordering Number	Dimensions, in. (mm)				
			L	C	G	F	E
1/16	1/8	-R-FL1-FT2	1.15(29.2)	0.34(8.6)	0.31(7.9)	0.31(7.9)	0.05(1.3)
1/16	3/16	-R-FL1-FT3	1.18(30.0)	0.34(8.6)	0.31(7.9)	0.31(7.9)	0.05(1.3)
1/16	1/4	-R-FL1-FT4	1.24(31.5)	0.34(8.6)	0.31(7.9)	0.31(7.9)	0.05(1.3)
1/8	1/16	-R-FL2-FT1	1.14(29.0)	0.50(12.7)	0.44(11.1)	0.44(11.1)	0.03(0.8)
1/8	1/8	-R-FL2-FT2	1.32(33.5)	0.50(12.7)	0.44(11.1)	0.44(11.1)	0.08(2.0)
1/8	3/16	-R-FL2-FT3	1.35(34.3)	0.50(12.7)	0.44(11.1)	0.44(11.1)	0.09(2.3)
1/8	1/4	-R-FL2-FT4	1.42(36.1)	0.50(12.7)	0.44(11.1)	0.44(11.1)	0.09(2.3)
1/8	3/8	-R-FL2-FT6	1.48(37.6)	0.50(12.7)	0.44(11.1)	0.44(11.1)	0.09(2.3)
1/8	1/2	-R-FL2-FT8	1.74(44.2)	0.50(12.7)	0.44(11.1)	0.56(14.3)	0.09(2.3)
3/16	1/8	-R-FL3-FT2	1.37(34.8)	0.54(13.7)	0.50(12.7)	0.44(11.1)	0.08(2.0)
3/16	1/4	-R-FL3-FT4	1.46(37.1)	0.54(13.7)	0.50(12.7)	0.44(11.1)	0.12(3.0)
1/4	1/8	-R-FL4-FT2	1.45(36.8)	0.60(15.2)	0.56(14.3)	0.50(12.7)	0.08(2.0)
1/4	3/16	-R-FL4-FT3	1.48(37.6)	0.60(15.2)	0.56(14.3)	0.50(12.7)	0.12(3.0)
1/4	1/4	-R-FL4-FT4	1.54(39.1)	0.60(15.2)	0.56(14.3)	0.50(12.7)	0.17(4.3)
1/4	5/16	-R-FL4-FT5	1.57(39.9)	0.60(15.2)	0.56(14.3)	0.50(12.7)	0.19(4.8)
1/4	3/8	-R-FL4-FT6	1.60(40.6)	0.60(15.2)	0.56(14.3)	0.50(12.7)	0.19(4.8)
1/4	1/2	-R-FL4-FT8	1.82(46.2)	0.60(15.2)	0.56(14.3)	0.56(14.3)	0.19(4.8)
1/4	5/8	-R-FL4-FT10	1.89(48.0)	0.60(15.2)	0.56(14.3)	0.69(17.5)	0.19(4.8)
1/4	3/4	-R-FL4-FT12	1.88(47.8)	0.60(15.2)	0.56(14.3)	0.81(20.6)	0.19(4.8)
5/16	3/8	-R-FL5-FT6	1.65(41.9)	0.64(16.3)	0.63(15.9)	0.56(14.3)	0.25(6.4)
5/16	1/2	-R-FL5-FT8	1.87(47.5)	0.64(16.3)	0.63(15.9)	0.56(14.3)	0.25(6.4)
3/8	1/4	-R-FL6-FT4	1.63(41.4)	0.66(16.8)	0.69(17.5)	0.63(15.9)	0.17(4.3)
3/8	3/8	-R-FL6-FT6	1.70(43.2)	0.66(16.8)	0.69(17.5)	0.63(15.9)	0.27(6.9)
3/8	1/2	-R-FL6-FT8	1.91(48.5)	0.66(16.8)	0.69(17.5)	0.63(15.9)	0.28(7.1)
3/8	5/8	-R-FL6-FT10	1.98(50.3)	0.66(16.8)	0.69(17.5)	0.69(17.5)	0.28(7.1)
3/8	3/4	-R-FL6-FT12	1.98(50.3)	0.66(16.8)	0.69(17.5)	0.81(20.6)	0.28(7.1)
1/2	1/4	-R-FL8-FT4	1.77(45.0)	0.90(22.9)	0.87(22.2)	0.81(20.6)	0.17(4.3)
1/2	3/8	-R-FL8-FT6	1.84(46.7)	0.90(22.9)	0.87(22.2)	0.81(20.6)	0.27(6.9)
1/2	1/2	-R-FL8-FT8	2.06(52.3)	0.90(22.9)	0.87(22.2)	0.81(20.6)	0.37(9.4)
1/2	5/8	-R-FL8-FT10	2.12(53.8)	0.90(22.9)	0.87(22.2)	0.81(20.6)	0.41(10.4)
1/2	3/4	-R-FL8-FT12	2.12(53.8)	0.90(22.9)	0.87(22.2)	0.81(20.6)	0.41(10.4)
1/2	1	-R-FL8-FT16	2.37(60.2)	0.90(22.9)	0.87(22.2)	1.06(27.0)	0.41(10.4)
5/8	3/4	-R-FL10-FT12	2.15(54.6)	0.96(24.4)	1.00(25.4)	0.94(23.8)	0.50(12.7)
5/8	7/8	-R-FL10-FT14	2.21(56.1)	0.96(24.4)	1.00(25.4)	0.94(23.8)	0.50(12.7)
5/8	1	-R-FL10-FT16	2.40(61.0)	0.96(24.4)	1.00(25.4)	1.06(27.0)	0.50(12.7)
3/4	3/4	-R-FL12-FT12	2.26(57.5)	0.96(24.4)	1.13(28.6)	1.06(27.0)	0.37(9.4)
3/4	1	-R-FL12-FT16	2.46(62.5)	0.96(24.4)	1.13(28.6)	1.06(27.0)	0.62(15.7)
1	1 1/4	-R-FL16-AFT20	3.17(80.5)	1.23(31.2)	1.50(38.1)	1.37(34.9)	0.88(22.4)
1	1 1/2	-R-FL16-AFT24	3.51(89.2)	1.23(31.2)	1.50(38.1)	1.63(41.3)	0.88(22.4)
1	2	-R-FL16-AFT32	4.43(112.5)	1.23(31.2)	1.50(38.1)	2.13(54.0)	0.88(22.4)
1 1/4	1 1/2	-R-FL20-AFT24	4.10(104.1)	1.62(41.1)	1.87(47.6)	1.87(47.6)	1.09(27.7)

Reducers

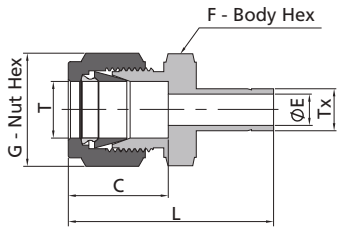

25 mm and below

Metric Tube

T-Tube O.D. (mm)	Tx-Tube O.D. (mm)	Basic Ordering Number	Dimensions, mm (in.)				
			L	C	G	F	E
2	3	-R-ML2-MT3	33.5(1.32)	12.9(0.51)	12.0(0.47)	12.0(0.47)	1.7(0.07)
3	4	-R-ML3-MT4	35.0(1.38)	12.9(0.51)	12.0(0.47)	12.0(0.47)	2.4(0.09)
3	6	-R-ML3-MT6	36.1(1.42)	12.9(0.51)	12.0(0.47)	12.0(0.47)	2.4(0.09)
3	10	-R-ML3-MT10	38.4(1.51)	12.9(0.51)	12.0(0.47)	14.0(0.55)	2.4(0.09)
4	6	-R-ML4-MT6	37.1(1.46)	13.7(0.54)	12.0(0.47)	12.0(0.47)	2.4(0.09)
6	3	-R-ML6-MT3	36.9(1.45)	15.3(0.60)	14.0(0.55)	14.0(0.55)	1.9(0.07)
6	8	-R-ML6-MT8	39.9(1.57)	15.3(0.60)	14.0(0.55)	14.0(0.55)	4.8(0.19)
6	10	-R-ML6-MT10	40.7(1.60)	15.3(0.60)	14.0(0.55)	14.0(0.55)	4.8(0.19)
6	12	-R-ML6-MT12	46.3(1.82)	15.3(0.60)	14.0(0.55)	14.0(0.55)	4.8(0.19)
6	18	-R-ML6-MT18	49.6(1.95)	15.3(0.60)	14.0(0.55)	22.0(0.87)	4.8(0.19)
8	6	-R-ML8-MT6	40.3(1.59)	16.2(0.64)	16.0(0.63)	15.0(0.59)	4.1(0.16)
8	10	-R-ML8-MT10	42.0(1.65)	16.2(0.64)	16.0(0.63)	15.0(0.59)	6.4(0.25)
8	12	-R-ML8-MT12	47.6(1.87)	16.2(0.64)	16.0(0.63)	15.0(0.59)	6.4(0.25)
10	6	-R-ML10-MT6	42.4(1.67)	17.2(0.68)	19.0(0.75)	18.0(0.71)	4.1(0.16)
10	8	-R-ML10-MT8	43.4(1.71)	17.2(0.68)	19.0(0.75)	18.0(0.71)	5.6(0.22)
10	12	-R-ML10-MT12	49.8(1.96)	17.2(0.68)	19.0(0.75)	18.0(0.71)	7.9(0.31)
10	15	-R-ML10-MT15	51.3(2.02)	17.2(0.68)	19.0(0.75)	18.0(0.71)	7.9(0.31)
10	18	-R-ML10-MT18	51.3(2.02)	17.2(0.68)	19.0(0.75)	22.0(0.87)	7.9(0.31)
12	6	-R-ML12-MT6	44.9(1.77)	22.8(0.90)	22.0(0.87)	22.0(0.87)	4.1(0.16)
12	8	-R-ML12-MT8	45.9(1.81)	22.8(0.90)	22.0(0.87)	22.0(0.87)	5.6(0.22)
12	10	-R-ML12-MT10	46.7(1.84)	22.8(0.90)	22.0(0.87)	22.0(0.87)	7.1(0.28)
12	16	-R-ML12-MT16	53.8(2.12)	22.8(0.90)	22.0(0.87)	22.0(0.87)	9.5(0.37)
12	18	-R-ML12-MT18	53.8(2.12)	22.8(0.90)	22.0(0.87)	22.0(0.87)	9.5(0.37)
12	20	-R-ML12-MT20	56.1(2.21)	22.8(0.90)	22.0(0.87)	22.0(0.87)	9.5(0.37)
12	22	-R-ML12-MT22	56.1(2.21)	22.8(0.90)	22.0(0.87)	24.0(0.94)	9.5(0.37)
12	25	-R-ML12-MT25	62.4(2.46)	22.8(0.90)	22.0(0.87)	27.0(1.06)	9.5(0.37)
16	12	-R-ML16-MT12	53.0(2.09)	24.4(0.96)	25.0(0.98)	24.0(0.94)	8.8(0.35)
18	12	-R-ML18-MT12	54.6(2.15)	24.4(0.96)	30.0(1.18)	27.0(1.06)	8.8(0.35)
18	16	-R-ML18-MT16	56.1(2.21)	24.4(0.96)	30.0(1.18)	27.0(1.06)	12.0(0.47)
18	20	-R-ML18-MT20	57.6(2.27)	24.4(0.96)	30.0(1.18)	27.0(1.06)	15.1(0.59)
18	22	-R-ML18-MT22	57.6(2.27)	24.4(0.96)	30.0(1.18)	27.0(1.06)	15.1(0.59)
18	25	-R-ML18-MT25	62.4(2.46)	24.4(0.96)	30.0(1.18)	27.0(1.06)	15.1(0.59)
20	16	-R-ML20-MT16	57.9(2.28)	26.0(1.02)	32.0(1.26)	30.0(1.18)	12.0(0.47)
20	18	-R-ML20-MT18	57.9(2.28)	26.0(1.02)	32.0(1.26)	30.0(1.18)	13.9(0.55)
20	22	-R-ML20-MT22	59.4(2.34)	26.0(1.02)	32.0(1.26)	30.0(1.18)	15.9(0.63)
20	25	-R-ML20-MT25	64.2(2.53)	26.0(1.02)	32.0(1.26)	30.0(1.18)	15.8(0.62)
22	18	-R-ML22-MT18	57.9(2.28)	26.0(1.02)	32.0(1.26)	30.0(1.18)	13.9(0.55)
22	20	-R-ML22-MT20	59.4(2.34)	26.0(1.02)	32.0(1.26)	30.0(1.18)	15.5(0.61)
22	25	-R-ML22-MT25	64.2(2.53)	26.0(1.02)	32.0(1.26)	30.0(1.18)	18.3(0.72)
25	18	-R-ML25-MT18	63.1(2.48)	31.3(1.23)	38.0(1.50)	35.0(1.38)	13.9(0.55)
25	20	-R-ML25-MT20	64.6(2.54)	31.3(1.23)	38.0(1.50)	35.0(1.38)	15.5(0.61)

Reducers

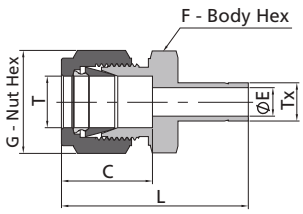

Metric Tube — **Fractional Tube**

T-Tube O.D. (mm)	Tx-Tube O.D. (in.)	Basic Ordering Number	Dimensions, mm (in.)				
			L	C	G	F	E
2	1/8	-R-ML2-FT2	33.5(1.32)	12.9(0.51)	12.0(0.47)	12.0(0.47)	1.7(0.07)
3	1/8	-R-ML3-FT2	33.5(1.32)	12.9(0.51)	12.0(0.47)	12.0(0.47)	2.0(0.08)
3	1/4	-R-ML3-FT4	36.1(1.42)	12.9(0.51)	12.0(0.47)	12.0(0.47)	2.4(0.09)
4	1/4	-R-ML4-FT4	37.1(1.46)	13.7(0.54)	12.0(0.47)	12.0(0.47)	2.4(0.09)
6	1/8	-R-ML6-FT2	36.9(1.45)	15.3(0.60)	14.0(0.55)	14.0(0.55)	2.0(0.08)
6	1/4	-R-ML6-FT4	39.2(1.54)	15.3(0.60)	14.0(0.55)	14.0(0.55)	4.4(0.17)
6	5/16	-R-ML6-FT5	39.9(1.57)	15.3(0.60)	14.0(0.55)	14.0(0.55)	4.8(0.19)
6	3/8	-R-ML6-FT6	40.7(1.60)	15.3(0.60)	14.0(0.55)	14.0(0.55)	4.8(0.19)
6	1/2	-R-ML6-FT8	46.3(1.82)	15.3(0.60)	14.0(0.55)	14.0(0.55)	4.8(0.19)
8	1/4	-R-ML8-FT4	40.3(1.59)	16.2(0.64)	16.0(0.63)	15.0(0.59)	4.4(0.17)
8	3/8	-R-ML8-FT6	42.0(1.65)	16.2(0.64)	16.0(0.63)	15.0(0.59)	6.4(0.25)
8	1/2	-R-ML8-FT8	47.6(1.87)	16.2(0.64)	16.0(0.63)	15.0(0.59)	6.4(0.25)
10	3/8	-R-ML10-FT6	44.4(1.75)	17.2(0.68)	19.0(0.75)	18.0(0.71)	6.8(0.27)
10	1/2	-R-ML10-FT8	49.8(1.96)	17.2(0.68)	19.0(0.75)	18.0(0.71)	7.9(0.31)
12	1/2	-R-ML12-FT8	52.3(2.06)	22.8(0.90)	22.0(0.87)	22.0(0.87)	9.3(0.37)
12	3/4	-R-ML12-FT12	53.8(2.12)	22.8(0.90)	22.0(0.87)	22.0(0.87)	9.5(0.37)
18	3/4	-R-ML18-FT12	56.1(2.21)	24.4(0.96)	30.0(1.18)	27.0(1.06)	14.7(0.58)
18	1	-R-ML18-FT16	62.4(2.46)	24.4(0.96)	30.0(1.18)	27.0(1.06)	15.1(0.59)
25	1	-R-ML25-FT16	69.5(2.74)	31.3(1.23)	38.0(1.50)	35.0(1.38)	20.2(0.80)

Fractional Tube — **Metric Tube**

T-Tube O.D. (in.)	Tx-Tube O.D. (mm)	Basic Ordering Number	Dimensions, in. (mm)				
			L	C	G	F	E
1/8	6	-R-FL2-MT6	1.42(36.1)	0.50(12.7)	0.44(11.1)	0.44(11.1)	0.09(2.3)

Bulkhead Reducers

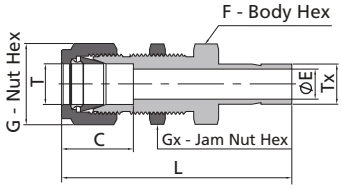

Fractional Tube

T-Tube O.D. (in.)	Tx-Tube O.D. (in.)	Basic Ordering Number	Dimensions, in. (mm)					
			L	C	G	F	Gx	E
1/8	1/8	-BR-FL2-FT2	1.95(49.5)	0.50(12.7)	0.44(11.1)	0.50(12.7)	0.50(12.7)	0.08(2.0)
1/4	1/4	-BR-FL4-FT4	2.20(55.9)	0.60(15.2)	0.56(14.3)	0.63(15.9)	0.63(15.9)	0.17(4.3)
3/8	3/8	-BR-FL6-FT6	2.41(61.2)	0.66(16.8)	0.69(17.5)	0.75(19.1)	0.75(19.1)	0.27(6.9)
1/2	1/2	-BR-FL8-FT8	2.87(72.9)	0.90(22.9)	0.87(22.2)	0.94(23.8)	0.94(23.8)	0.37(9.4)
5/8	5/8	-BR-FL10-FT10	2.96(75.2)	0.96(24.4)	1.00(25.4)	1.06(27.0)	1.06(27.0)	0.47(11.9)
3/4	3/4	-BR-FL12-FT12	3.21(81.5)	0.96(24.4)	1.13(28.6)	1.19(30.2)	1.19(30.2)	0.58(14.7)
1	1	-BR-FL16-FT16	3.95(100.3)	1.23(31.2)	1.50(38.1)	1.63(41.3)	1.63(41.3)	0.80(20.3)

Reducer Elbows

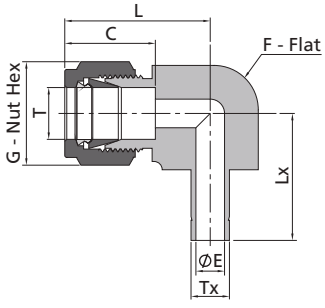

Metric Tube

T-Tube O.D. (mm)	Tx-Tube O.D. (mm)	Basic Ordering Number	Dimensions, mm (in.)					
			L	C	G	F	E	Lx
6	6	-LR-ML6-MT6	27.0(1.06)	15.3(0.60)	14.0(0.55)	12.7(0.50)	4.1(0.16)	25.0(0.98)
12	12	-LR-ML12-MT12	38.1(1.50)	22.8(0.90)	22.0(0.87)	23.8(0.94)	8.8(0.35)	39.2(1.54)

Reducer Tees

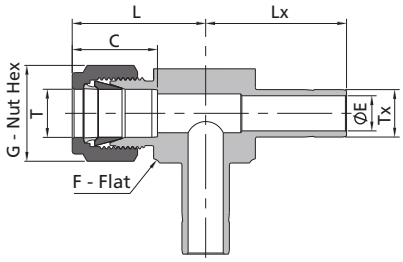

Fractional Tube

T-Tube O.D. (in.)	Tx-Tube O.D. (in.)	Basic Ordering Number	Dimensions, in. (mm)					
			L	C	G	F	E	Lx
1/4	1/4	SS-TRR-FL4-FT4	1.06 (26.9)	0.60 (15.2)	0.56 (14.3)	0.50 (12.7)	0.17 (4.3)	0.98 (25.0)
3/8	1/4	SS-TRR-FL6-FT4	1.20 (30.5)	0.66 (16.8)	0.69 (17.5)	0.63 (15.9)	0.17 (4.3)	1.05 (26.6)
3/8	3/8	SS-TRR-FL6-FT6	1.20 (30.5)	0.66 (16.8)	0.69 (17.5)	0.63 (15.9)	0.27 (6.8)	1.10 (28.0)
1/2	3/8	SS-TRR-FL8-FT6	1.42 (36.1)	0.90 (22.9)	0.87 (22.2)	0.81 (20.6)	0.27 (6.8)	1.24 (31.4)
1/2	1/2	SS-TRR-FL8-FT8	1.42 (36.1)	0.90 (22.9)	0.87 (22.2)	0.81 (20.6)	0.37 (9.4)	1.50 (38.0)

Reducer Branch Tees

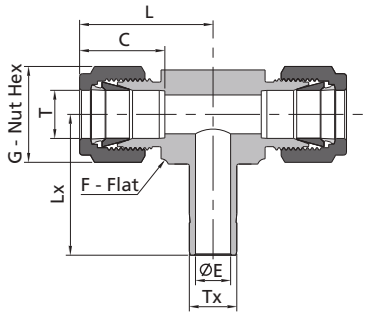

Fractional Tube

T-Tube O.D. (in.)	Tx-Tube O.D. (in.)	Basic Ordering Number	Dimensions, in. (mm)					
			L	C	G	F	E	Lx
1/4	1/4	SS-TTR-FL4-FT4	1.06 (26.9)	0.60 (15.2)	0.56 (14.3)	0.50 (12.7)	0.17 (4.3)	0.98 (25.0)
3/8	3/8	SS-TTR-FL6-FT6	1.20 (30.5)	0.66 (16.8)	0.69 (17.5)	0.63 (15.9)	0.27 (6.8)	1.10 (28.0)
1/2	1/2	SS-TTR-FL8-FT8	1.42 (36.1)	0.90 (22.9)	0.87 (22.2)	0.81 (20.6)	0.37 (9.4)	1.50 (38.0)

Reducer Run Tees

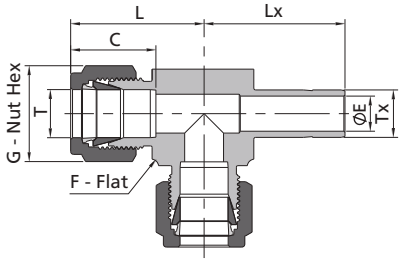

Fractional Tube

T-Tube O.D. (in.)	Tx-Tube O.D. (in.)	Basic Ordering Number	Dimensions, in. (mm)					
			L	C	G	F	E	Lx
1/4	1/4	SS-TRT-FL4-FT4	1.06 (26.9)	0.60 (15.2)	0.56 (14.3)	0.50 (12.7)	0.17 (4.3)	0.98 (25.0)
3/8	1/4	SS-TRT-FL6-FT4	1.20 (30.5)	0.66 (16.8)	0.69 (17.5)	0.63 (15.9)	0.17 (4.3)	1.05 (26.6)
3/8	3/8	SS-TRT-FL6-FT6	1.20 (30.5)	0.66 (16.8)	0.69 (17.5)	0.63 (15.9)	0.27 (6.8)	1.10 (28.0)
1/2	3/8	SS-TRT-FL8-FT6	1.42 (36.1)	0.90 (22.9)	0.87 (22.2)	0.81 (20.6)	0.27 (6.8)	1.24 (31.4)
1/2	1/2	SS-TRT-FL8-FT8	1.42 (36.1)	0.90 (22.9)	0.87 (22.2)	0.81 (20.6)	0.37 (9.4)	1.50 (38.0)

Reducer Double Run Tees

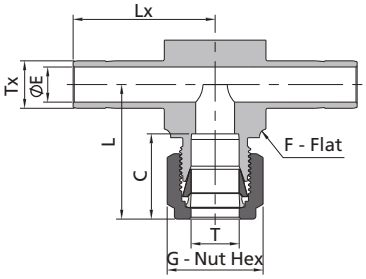

Fractional Tube

T-Tube O.D. (in.)	Tx-Tube O.D. (in.)	Basic Ordering Number	Dimensions, in. (mm)					
			L	C	G	F	E	Lx
1/4	1/4	SS-RRT-FT4-FL4	1.06 (26.9)	0.60 (15.2)	0.56 (14.3)	0.50 (12.7)	0.17 (4.3)	0.98 (25.0)
3/8	3/8	SS-RRT-FT6-FL6	1.20 (30.5)	0.66 (16.8)	0.69 (17.5)	0.63 (15.9)	0.27 (6.8)	1.10 (28.0)
1/2	1/2	SS-RRT-FT8-FL8	1.42 (36.1)	0.90 (22.9)	0.87 (22.2)	0.81 (20.6)	0.37 (9.4)	1.50 (38.0)

Insert for Soft Plastic Tubings

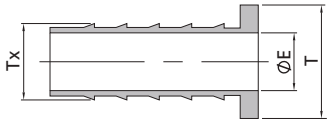

Insert for soft plastic tubing is used to protect soft plastic tubing used with tube fittings. To determine the correct size of the insert for soft plastic tubing, the outside and inside diameter of the soft plastic tubing should be determined first.

Fractional Tube

T-Tube O.D. (in.)	Tx-Tube I.D. (in.)	Basic Ordering Number	E in. (mm)
3/16	1/8	-IN-3-2	0.09(2.3)
1/4	1/8	-IN-4-2	0.09(2.3)
1/4	0.17	-IN-4-017	0.11(2.8)
1/4	3/16	-IN-4-3	0.14(3.5)
5/16	1/8	-IN-5-2	0.09(2.3)
5/16	3/16	-IN-5-3	0.12(3.0)
5/16	1/4	-IN-5-4	0.19(4.8)
3/8	3/16	-IN-6-3	0.12(3.0)
3/8	1/4	-IN-6-4	0.19(4.8)
1/2	1/4	-IN-8-4	0.19(4.8)
1/2	3/8	-IN-8-6	0.31(7.9)
5/8	3/8	-IN-10-6	0.31(7.9)
5/8	1/2	-IN-10-8	0.44(11.1)
3/4	1/2	-IN-12-8	0.44(11.1)
3/4	5/8	-IN-12-10	0.56(14.2)
1	3/4	-IN-16-12	0.69(17.5)

Metric Tube

T-Tube O.D. (mm)	Tx-Tube I.D. (mm)	Basic Ordering Number	E mm (in.)
6	4	-IN-6M-4M	2.8(0.11)
8	6	-IN-8M-6M	4.4(0.17)
10	8	-IN-10M-8M	6.4(0.25)
12	8	-IN-12M-8M	6.4(0.25)
12	10	-IN-12M-10M	8.3(0.33)

Ordering Information
Add the material designator in front of the basic ordering number to form a complete ordering number.

Material	Material Designator
316 SS	SS
Brass	B
Alloy 400	M

Example: SS-IN-3-2

Port Connectors

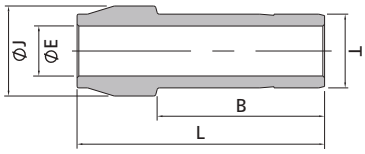

1"/25 mm and below

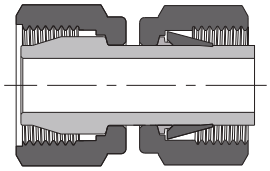

1 1/4" /28 mm and above

Fractional Tube

T-Tube O.D. (in.)	Basic Ordering Number	Dimensions, in. (mm)			
		L	B	E	J
1/16	-P-FL1	0.63(16.0)	0.44(11.1)	0.03(0.8)	0.13(3.4)
1/8	-P-FL2	0.97(24.7)	0.65(16.6)	0.08(2.0)	0.24(6.0)
1/4	-P-FL4	1.06(27.0)	0.75(19.0)	0.17(4.3)	0.36(9.1)
5/16	-P-FL5	1.11(28.3)	0.80(20.2)	0.22(5.6)	0.43(10.8)
3/8	-P-FL6	1.12(28.5)	0.81(20.6)	0.27(6.8)	0.48(12.3)
1/2	-P-FL8	1.68(42.6)	1.13(28.7)	0.37(9.4)	0.61(15.5)
5/8	-P-FL10	1.64(41.7)	1.16(29.4)	0.47(11.9)	0.74(18.7)
3/4	-P-FL12	1.65(41.9)	1.13(28.6)	0.58(14.7)	0.87(22.0)
1	-P-FL16	2.12(53.8)	1.43(36.4)	0.80(20.3)	1.11(28.3)
1 1/4	-P-FL20	2.87(73.0)	2.07(52.6)	1.02(25.8)	1.54(39.0)
1 1/2	-P-FL24	3.48(88.4)	2.50(63.6)	1.24(31.5)	1.85(47.0)

Metric Tube

T-Tube O.D. (mm)	Basic Ordering Number	Dimensions, mm (in.)			
		L	B	E	J
3	-P-ML3	24.6(0.97)	16.4(0.65)	1.9(0.07)	5.9(0.23)
6	-P-ML6	27.0(1.06)	18.7(0.74)	4.1(0.16)	8.8(0.35)
8	-P-ML8	28.7(1.13)	20.1(0.79)	5.6(0.22)	10.8(0.43)
10	-P-ML10	30.2(1.19)	20.3(0.80)	7.1(0.28)	13.0(0.51)
12	-P-ML12	37.5(1.48)	25.9(1.02)	8.8(0.35)	15.1(0.59)
15	-P-ML15	40.4(1.59)	28.8(1.13)	11.2(0.44)	18.0(0.71)
16	-P-ML16	40.4(1.59)	27.6(1.09)	12.0(0.47)	18.8(0.74)
18	-P-ML18	40.9(1.61)	27.6(1.09)	13.9(0.55)	21.0(0.83)
20	-P-ML20	42.6(1.68)	29.4(1.16)	15.5(0.61)	23.0(0.91)
25	-P-ML25	54.6(2.15)	37.0(1.46)	19.9(0.78)	28.0(1.10)
28	-P-ML28	66.0(2.60)	46.9(1.85)	22.5(0.89)	34.4(1.35)
30	-P-ML30	68.6(2.70)	48.2(1.90)	24.3(0.96)	37.4(1.47)
32	-P-ML32	74.2(2.92)	52.8(2.08)	26.5(1.04)	39.4(1.55)
38	-P-ML38	87.0(3.43)	61.7(2.43)	31.6(1.24)	47.2(1.86)

Reducing Port Connectors

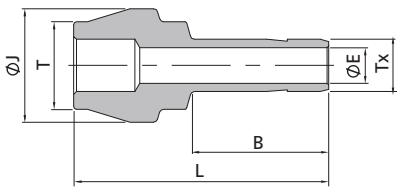

1"/25mm and below

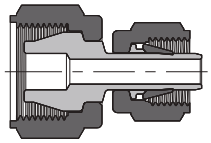

1 1/4" /28 mm and above

Fractional Tube

T-Tube O.D. (in.)	Tx-Tube O.D. (in.)	Basic Ordering Number	Dimensions, in. (mm)			
			L	B	E	J
1/8	1/16	-P-FL2-FL1	0.84(21.3)	0.41(10.3)	0.03(0.8)	0.24(6.0)
1/4	1/16	-P-FL4-FL1	0.81(20.7)	0.37(9.3)	0.03(0.8)	0.36(9.1)
1/4	1/8	-P-FL4-FL2	1.00(25.4)	0.56(14.2)	0.08(2.0)	0.36(9.1)
3/8	1/8	-P-FL6-FL2	1.01(25.7)	0.53(13.5)	0.08(2.0)	0.48(12.3)
3/8	1/4	-P-FL6-FL4	1.11(28.2)	0.66(16.8)	0.17(4.3)	0.48(12.3)
1/2	1/4	-P-FL8-FL4	1.34(34.1)	0.63(15.9)	0.17(4.3)	0.61(15.5)
1/2	3/8	-P-FL8-FL6	1.40(35.6)	0.70(17.7)	0.27(6.8)	0.61(15.5)
3/4	1/2	-P-FL12-FL8	1.65(42.0)	0.95(24.1)	0.37(9.4)	0.87(22.0)
1	1/2	-P-FL16-FL8	1.69(42.9)	0.96(24.4)	0.37(9.4)	1.12(28.5)
1	3/4	-P-FL16-FL12	1.72(43.7)	1.03(26.1)	0.58(14.7)	1.12(28.5)

Metric Tube

T-Tube O.D. (mm)	Tx-Tube O.D. (mm)	Basic Ordering Number	Dimensions, mm (in.)			
			L	B	E	J
6	3	-P-ML6-ML3	25.7(1.01)	13.8(0.54)	1.9(0.07)	8.8(0.35)
8	6	-P-ML8-ML6	27.5(1.08)	15.7(0.62)	4.1(0.16)	10.8(0.43)
10	6	-P-ML10-ML6	29.2(1.15)	15.8(0.62)	4.1(0.16)	13.0(0.51)
10	8	-P-ML10-ML8	29.5(1.16)	16.3(0.64)	5.6(0.22)	13.0(0.51)
12	6	-P-ML12-ML6	31.2(1.23)	16.1(0.63)	4.1(0.16)	15.1(0.59)
12	8	-P-ML12-ML8	31.4(1.24)	16.6(0.65)	5.6(0.22)	15.1(0.59)
12	10	-P-ML12-ML10	32.0(1.26)	17.4(0.69)	7.1(0.28)	15.1(0.59)
16	12	-P-ML16-ML12	39.5(1.56)	23.2(0.91)	8.8(0.35)	18.8(0.74)
28	25	-P-ML28-ML25	56.5(2.22)	33.0(1.30)	19.9(0.78)	34.3(1.35)
32	25	-P-ML32-ML25	65.5(2.58)	33.0(1.30)	19.9(0.78)	39.4(1.55)
38	25	-P-ML38-ML25	71.0(2.80)	33.3(1.31)	19.9(0.78)	47.2(1.86)

Sanitary Flange Fittings

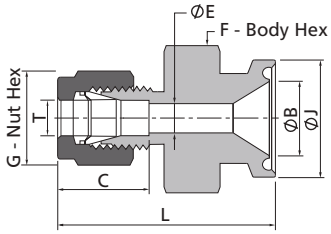

- The flange ends are dimensioned to meet the ASME BPE Standard.
- Products are cleaned and packaged according to ASTM G93 Level C.
- The 1-inch flange sealing surface defaults to Type B. For the Type A selection, add "A" as a suffix to the basic ordering number.
  Example: SS-SFF-FL4-SC16A

Fractional Tube

T-Tube O.D. (in.)	Flange Size (in.)	Basic Ordering Number	Dimensions, in. (mm)						
			L	B	C	E	F	J	G
1/4	1/2	-SFF-FL4-SC8	1.57(39.9)	0.37(9.4)	0.60(15.2)	0.19(4.8)	1.00(25.4)	0.98(24.9)	0.56(14.3)
1/4	3/4	-SFF-FL4-SC12	1.57(39.9)	0.62(15.7)	0.60(15.2)	0.19(4.8)	1.00(25.4)	0.98(24.9)	0.56(14.3)
1/4	1	-SFF-FL4-SC16	1.57(39.9)	0.87(22.1)	0.60(15.2)	0.19(4.8)	1.37(34.9)	1.98(50.4)	0.56(14.3)
1/4	1 1/2	-SFF-FL4-SC24	1.57(39.9)	1.37(34.8)	0.60(15.2)	0.19(4.8)	1.37(34.9)	1.98(50.4)	0.56(14.3)
3/8	1/2	-SFF-FL6-SC8	1.63(41.4)	0.37(9.4)	0.66(16.8)	0.28(7.1)	1.00(25.4)	0.98(24.9)	0.69(17.5)
3/8	3/4	-SFF-FL6-SC12	1.63(41.4)	0.62(15.7)	0.66(16.8)	0.28(7.1)	1.00(25.4)	0.98(24.9)	0.69(17.5)
3/8	1	-SFF-FL6-SC16	1.63(41.4)	0.87(22.1)	0.66(16.8)	0.28(7.1)	1.37(34.9)	1.98(50.4)	0.69(17.5)
3/8	1 1/2	-SFF-FL6-SC24	1.63(41.4)	1.37(34.8)	0.66(16.8)	0.28(7.1)	1.37(34.9)	1.98(50.4)	0.69(17.5)
1/2	1/2	-SFF-FL8-SC8	1.74(44.2)	0.37(9.4)	0.90(22.9)	0.37(9.4)	1.00(25.4)	0.98(24.9)	0.87(22.2)
1/2	3/4	-SFF-FL8-SC12	1.74(44.2)	0.62(15.7)	0.90(22.9)	0.41(10.4)	1.00(25.4)	0.98(24.9)	0.87(22.2)
1/2	1	-SFF-FL8-SC16	1.74(44.2)	0.87(22.1)	0.90(22.9)	0.41(10.4)	1.37(34.9)	1.98(50.4)	0.87(22.2)
1/2	1 1/2	-SFF-FL8-SC24	1.74(44.2)	1.37(34.8)	0.90(22.9)	0.41(10.4)	1.37(34.9)	1.98(50.4)	0.87(22.2)
1	1	-SFF-FL16-SC16	1.91(48.5)	0.87(22.1)	1.23(31.2)	0.87(22.1)	1.37(34.9)	1.98(50.4)	1.50(38.1)
1	2	-SFF-FL16-SC32	2.49(63.2)	1.37(34.8)	1.23(31.2)	0.88(22.4)	2.75(69.9)	2.52(64.0)	1.50(38.1)

Male Adapters

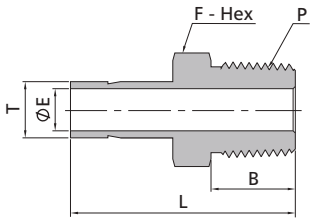

1" and below

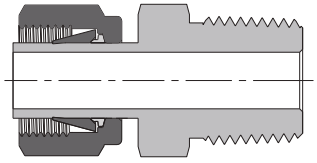

1 1/4" and above

The E dimension refers to the smallest nominal orifice. It might be larger at tapered thread end, straight thread end.

Fractional Tube						NPT Thread
T-Tube O.D. (in.)	P-NPT Size	Basic Ordering Number	Dimensions, in. (mm)			
			L	B	E	F
1/16	1/8	-AM-FT1-NS2	1.00(25.4)	0.38(9.7)	0.03(0.8)	0.44(11.1)
1/8	1/8	-AM-FT2-NS2	1.16(29.5)	0.38(9.7)	0.08(2.0)	0.44(11.1)
1/8	1/4	-AM-FT2-NS4	1.37(34.8)	0.56(14.2)	0.08(2.0)	0.56(14.3)
3/16	1/8	-AM-FT3-NS2	1.19(30.2)	0.38(9.7)	0.12(3.0)	0.44(11.1)
3/16	1/4	-AM-FT3-NS4	1.40(35.6)	0.56(14.2)	0.12(3.0)	0.56(14.3)
1/4	1/8	-AM-FT4-NS2	1.25(31.8)	0.38(9.7)	0.17(4.3)	0.44(11.1)
1/4	1/4	-AM-FT4-NS4	1.46(37.1)	0.56(14.2)	0.17(4.3)	0.56(14.3)
1/4	3/8	-AM-FT4-NS6	1.49(37.8)	0.56(14.2)	0.17(4.3)	0.69(17.5)
1/4	1/2	-AM-FT4-NS8	1.71(43.4)	0.75(19.1)	0.17(4.3)	0.87(22.2)
5/16	1/8	-AM-FT5-NS2	1.29(32.8)	0.38(9.7)	0.19(4.8)	0.44(11.1)
5/16	1/4	-AM-FT5-NS4	1.50(38.1)	0.56(14.2)	0.22(5.6)	0.56(14.3)
5/16	3/8	-AM-FT5-NS6	1.53(38.9)	0.56(14.2)	0.22(5.6)	0.69(17.5)
5/16	1/2	-AM-FT5-NS8	1.74(44.2)	0.75(19.1)	0.22(5.6)	0.87(22.2)
3/8	1/8	-AM-FT6-NS2	1.32(33.5)	0.38(9.7)	0.19(4.8)	0.44(11.1)
3/8	1/4	-AM-FT6-NS4	1.53(38.9)	0.56(14.2)	0.27(6.9)	0.56(14.3)
3/8	3/8	-AM-FT6-NS6	1.56(39.6)	0.56(14.2)	0.27(6.9)	0.69(17.5)
3/8	1/2	-AM-FT6-NS8	1.78(45.2)	0.75(19.1)	0.27(6.9)	0.87(22.2)
1/2	1/4	-AM-FT8-NS4	1.75(44.5)	0.56(14.2)	0.28(7.1)	0.56(14.3)
1/2	3/8	-AM-FT8-NS6	1.78(45.2)	0.56(14.2)	0.37(9.4)	0.69(17.5)
1/2	1/2	-AM-FT8-NS8	2.00(50.8)	0.75(19.1)	0.37(9.4)	0.87(22.2)
5/8	1/2	-AM-FT10-NS8	2.06(52.3)	0.75(19.1)	0.47(11.9)	0.87(22.2)
3/4	1/2	-AM-FT12-NS8	2.06(52.3)	0.75(19.1)	0.47(11.9)	0.87(22.2)
3/4	3/4	-AM-FT12-NS12	2.06(52.3)	0.75(19.1)	0.58(14.7)	1.06(27.0)
3/4	1	-AM-FT12-NS16	2.41(61.2)	0.94(23.9)	0.58(14.7)	1.37(34.9)
1	3/4	-AM-FT16-NS12	2.31(58.7)	0.75(19.1)	0.62(15.7)	1.06(27.0)
1	1	-AM-FT16-NS16	2.60(66.0)	0.94(23.9)	0.80(20.3)	1.37(34.9)
1 1/4	1 1/4	-AM-AFT20-NS20	3.16(80.3)	0.94(23.9)	1.02(25.9)	1.75(44.5)
1 1/2	1 1/2	-AM-AFT24-NS24	3.72(94.5)	1.03(26.2)	1.25(31.8)	2.13(54.0)

Fractional Tube						ISO Tapered Thread (RT)
T-Tube O.D. (in.)	P-RT Size	Basic Ordering Number	Dimensions, in. (mm)			
			L	B	E	F
1/8	1/8	-AM-FT2-RT2	1.16(29.5)	0.38(9.7)	0.08(2.0)	0.44(11.1)
1/8	1/4	-AM-FT2-RT4	1.37(34.8)	0.56(14.2)	0.08(2.0)	0.56(14.3)
1/4	1/8	-AM-FT4-RT2	1.25(31.8)	0.38(9.7)	0.17(4.3)	0.44(11.1)
1/4	1/4	-AM-FT4-RT4	1.46(37.1)	0.56(14.2)	0.17(4.3)	0.56(14.3)
1/4	3/8	-AM-FT4-RT6	1.49(37.8)	0.56(14.2)	0.17(4.3)	0.69(17.5)
1/4	1/2	-AM-FT4-RT8	1.71(43.4)	0.75(19.1)	0.17(4.3)	0.87(22.2)
5/16	1/8	-AM-FT5-RT2	1.29(32.8)	0.38(9.7)	0.19(4.8)	0.44(11.1)
5/16	1/4	-AM-FT5-RT4	1.50(38.1)	0.56(14.2)	0.22(5.6)	0.56(14.3)
3/8	1/4	-AM-FT6-RT4	1.53(38.9)	0.56(14.2)	0.27(6.9)	0.56(14.3)
3/8	3/8	-AM-FT6-RT6	1.56(39.6)	0.56(14.2)	0.27(6.9)	0.69(17.5)
3/8	1/2	-AM-FT6-RT8	1.78(45.2)	0.75(19.1)	0.27(6.9)	0.87(22.2)
1/2	1/4	-AM-FT8-RT4	1.75(44.5)	0.56(14.2)	0.28(7.1)	0.56(14.3)
1/2	3/8	-AM-FT8-RT6	1.78(45.2)	0.56(14.2)	0.37(9.4)	0.69(17.5)
1/2	1/2	-AM-FT8-RT8	2.00(50.8)	0.75(19.1)	0.37(9.4)	0.87(22.2)
5/8	3/8	-AM-FT10-RT6	1.91(48.5)	0.56(14.2)	0.37(9.5)	0.69(17.5)
5/8	1/2	-AM-FT10-RT8	2.06(52.3)	0.75(19.1)	0.47(11.9)	0.87(22.2)
3/4	3/4	-AM-FT12-RT12	2.06(52.3)	0.75(19.1)	0.58(14.7)	1.06(27.0)
1	1	-AM-FT16-RT16	2.60(66.0)	0.94(23.9)	0.80(20.3)	1.37(34.9)

Male Adapters

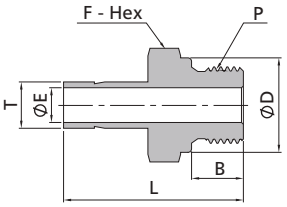

The E dimension refers to the smallest nominal orifice. It might be larger at tapered thread end, straight thread end.

Fractional Tube			ISO Parallel Thread (RS)				
T-Tube O.D. (in.)	P-RS Size	Basic Ordering Number	Dimensions, in. (mm)				
			L	B	E	F	D
1/8	1/8	-AM-FT2-RS2	1.22(31.0)	0.28(7.1)	0.08(2.0)	0.56(14.3)	0.54(13.7)
1/8	1/4	-AM-FT2-RS4	1.41(35.8)	0.44(11.2)	0.08(2.0)	0.75(19.1)	0.70(17.8)
1/4	1/8	-AM-FT4-RS2	1.31(33.3)	0.28(7.1)	0.16(4.1)	0.56(14.3)	0.54(13.7)
1/4	1/4	-AM-FT4-RS4	1.50(38.1)	0.44(11.2)	0.17(4.3)	0.75(19.1)	0.70(17.8)
3/8	1/8	-AM-FT6-RS2	1.29(32.8)	0.28(7.1)	0.16(4.1)	0.56(14.3)	0.54(13.7)
3/8	1/4	-AM-FT6-RS4	1.57(39.9)	0.44(11.2)	0.23(5.8)	0.75(19.1)	0.70(17.8)
3/8	3/8	-AM-FT6-RS6	1.60(40.6)	0.44(11.2)	0.27(6.9)	0.87(22.2)	0.85(21.6)
3/8	1/2	-AM-FT6-RS8	1.69(42.9)	0.56(14.2)	0.28(7.1)	1.06(27.0)	1.02(25.9)
1/2	1/4	-AM-FT8-RS4	1.79(45.5)	0.44(11.2)	0.23(5.8)	0.75(19.1)	0.70(17.8)
1/2	3/8	-AM-FT8-RS6	1.82(46.2)	0.44(11.2)	0.31(7.9)	0.87(22.2)	0.85(21.6)
1/2	1/2	-AM-FT8-RS8	1.94(49.2)	0.56(14.2)	0.37(9.4)	1.06(27.0)	1.02(25.9)
5/8	1/2	-AM-FT10-RS8	1.97(50.0)	0.56(14.2)	0.47(11.9)	1.06(27.0)	1.02(25.9)
3/4	3/4	-AM-FT12-RS12	2.16(54.9)	0.63(16.0)	0.58(14.7)	1.31(33.3)	1.26(32.0)
1	1	-AM-FT16-RS16	2.54(64.5)	0.72(18.3)	0.80(20.3)	1.63(41.3)	1.53(38.9)

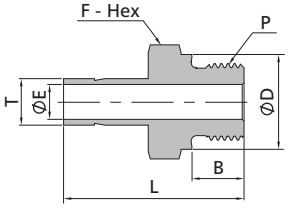

The E dimension refers to the smallest nominal orifice. It might be larger at tapered thread end, straight thread end.

Fractional Tube			ISO Parallel Thread (RP)				
T-Tube O.D. (in.)	P-RP Size	Basic Ordering Number	Dimensions, in. (mm)				
			L	B	E	F	D
1/8	1/8	-AM-FT2-RP2	1.09(27.7)	0.28(7.1)	0.08(2.0)	0.56(14.3)	0.54(13.7)
1/8	1/4	-AM-FT2-RP4	1.31(33.3)	0.44(11.2)	0.08(2.0)	0.75(19.1)	0.70(17.8)
1/4	1/8	-AM-FT4-RP2	1.19(30.2)	0.28(7.1)	0.16(4.1)	0.56(14.3)	0.54(13.7)
1/4	1/4	-AM-FT4-RP4	1.50(38.1)	0.44(11.2)	0.18(4.6)	0.75(19.1)	0.70(17.8)
3/8	1/8	-AM-FT6-RP2	1.34(34.0)	0.28(7.1)	0.16(4.1)	0.75(19.1)	0.54(13.7)
3/8	1/4	-AM-FT6-RP4	1.47(37.3)	0.44(11.2)	0.25(6.4)	0.75(19.1)	0.70(17.8)
3/8	3/8	-AM-FT6-RP6	1.50(38.1)	0.44(11.2)	0.27(6.9)	0.87(22.2)	0.85(21.6)
3/8	1/2	-AM-FT6-RP8	1.69(42.9)	0.56(14.2)	0.27(6.9)	1.06(27.0)	1.02(25.9)
1/2	1/4	-AM-FT8-RP4	1.69(42.9)	0.44(11.2)	0.25(6.4)	0.75(19.1)	0.70(17.8)
1/2	3/8	-AM-FT8-RP6	1.72(43.7)	0.44(11.2)	0.31(7.9)	0.87(22.2)	0.85(21.6)
1/2	1/2	-AM-FT8-RP8	1.94(49.3)	0.56(14.2)	0.37(9.4)	1.06(27.0)	1.02(25.9)
5/8	1/2	-AM-FT10-RP8	1.97(50.0)	0.56(14.2)	0.47(11.9)	1.06(27.0)	1.02(25.9)
3/4	3/4	-AM-FT12-RP12	2.09(53.1)	0.63(16.0)	0.58(14.7)	1.32(33.5)	1.26(32.0)
1	1	-AM-FT16-RP16	2.49(63.3)	0.72(18.3)	0.78(19.8)	1.63(41.3)	1.53(38.9)

Male Adapters

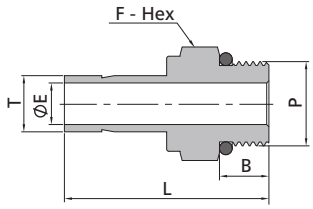

1" and below

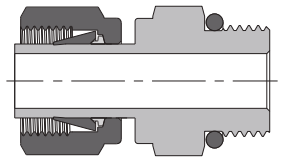

1 1/4" and above

1. The E dimension refers to the smallest nominal orifice. It might be larger at tapered thread end, straight thread end.
2. Adapt to straight thread boss of SAE J1926-1, ISO 11926-1 and MS 16142.

Fractional Tube				SAE/MS Straight Threads (ST)			
T-Tube O.D. (in.)	P-SAE Nominal Size	P-SAE/MS Thread Specification	Basic Ordering Number	Dimensions, in. (mm)			
				L	B	E	F
1/8	2	5/16-24	-AM-FT2-ST5	1.20(30.5)	0.30(7.6)	0.08(2.0)	0.44(11.1)
1/4	4	7/16-20	-AM-FT4-ST7	1.39(35.3)	0.36(9.1)	0.17(4.3)	0.56(14.3)
3/8	4	7/16-20	-AM-FT6-ST7	1.46(37.1)	0.36(9.1)	0.20(5.1)	0.56(14.3)
3/8	6	9/16-18	-AM-FT6-ST9	1.52(38.6)	0.39(9.9)	0.27(6.9)	0.69(17.5)
3/8	8	3/4-16	-AM-FT6-ST12	1.60(40.6)	0.44(11.2)	0.27(6.9)	0.87(22.2)
1/2	6	9/16-18	-AM-FT8-ST9	1.74(44.2)	0.39(9.9)	0.28(7.1)	0.69(17.5)
1/2	8	3/4-16	-AM-FT8-ST12	1.82(46.2)	0.44(11.2)	0.37(9.4)	0.87(22.2)
5/8	10	7/8-14	-AM-FT10-ST14	1.94(49.3)	0.50(12.7)	0.47(11.9)	1.00(25.4)
3/4	12	1 1/16-12	-AM-FT12-ST17	2.10(53.3)	0.59(15.0)	0.58(14.7)	1.25(31.8)
1	16	1 5/16-12	-AM-FT16-ST21	2.41(61.2)	0.59(15.0)	0.80(20.3)	1.50(38.1)
1 1/4	20	1 5/8-12	-AM-AFT20-ST26	2.81(71.4)	0.59(15.0)	1.02(25.9)	1.87(47.6)
1 1/2	24	1 7/8-12	-AM-AFT24-ST30	3.28(83.3)	0.59(15.0)	1.25(31.8)	2.13(54.0)

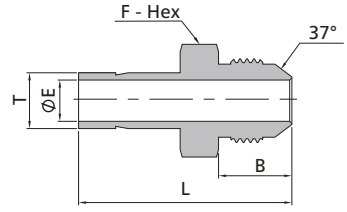

The E dimension refers to the smallest nominal orifice. It might be larger at tapered thread end, straight thread end.

Fractional Tube			37° Flare (AN)			
T-Tube O.D. (in.)	AN Tube Flare Size	Basic Ordering Number	Dimensions, in. (mm)			
			L	B	E	F
1/4	1/4	-AM-FT4-AN4	1.46(37.1)	0.55(14.0)	0.17(4.3)	0.50(12.7)
3/8	1/4	-AM-FT6-AN4	1.53(38.9)	0.55(14.0)	0.17(4.3)	0.50(12.7)
3/8	3/8	-AM-FT6-AN6	1.56(39.6)	0.56(14.2)	0.27(6.9)	0.63(15.9)
1/2	1/2	-AM-FT8-AN8	1.91(48.5)	0.66(16.8)	0.37(9.4)	0.81(20.6)
3/4	3/4	-AM-FT12-AN12	2.21(56.1)	0.86(21.8)	0.58(14.7)	1.13(28.6)
1	1	-AM-FT16-AN16	2.58(65.5)	0.91(23.1)	0.80(20.3)	1.37(34.9)

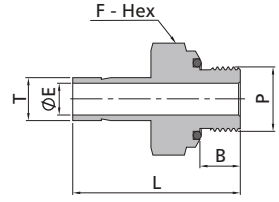

The E dimension refers to the smallest nominal orifice. It might be larger at tapered thread end, straight thread end.

Fractional Tube				SAE/MS Straight Threads (OST)			
T-Tube O.D. (in.)	P-SAE Nominal Size	P-SAE/MS Thread Specification	Basic Ordering Number	Dimensions, in. (mm)			
				L	B	E	F
1/8	2	5/16-24	-AM-FT2-OST5	1.28(32.5)	0.34(8.6)	0.08(2.0)	0.56(14.3)
3/16	3	3/8-24	-AM-FT3-OST6	1.38(35.1)	0.38(9.7)	0.12(3.0)	0.63(15.9)
1/4	4	7/16-20	-AM-FT4-OST7	1.54(39.1)	0.41(10.4)	0.17(4.3)	0.75(19.1)
5/16	5	1/2-20	-AM-FT5-OST8	1.64(41.7)	0.44(11.2)	0.22(5.6)	0.87(22.2)
3/8	6	9/16-18	-AM-FT6-OST9	1.70(43.2)	0.47(11.9)	0.27(6.9)	0.94(23.8)
1/2	8	3/4-16	-AM-FT8-OST12	1.95(49.5)	0.47(11.9)	0.37(9.4)	1.13(28.6)

Male Adapters

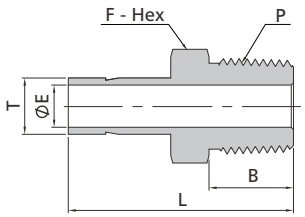

25 mm and below

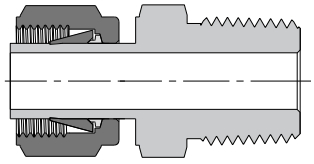

28 mm and above

The E dimension refers to the smallest nominal orifice. It might be larger at tapered thread end, straight thread end.

Metric Tube						NPT Thread
T-Tube O.D. (mm)	P-NPT Size	Basic Ordering Number	Dimensions, mm (in.)			
			L	B	E	F
3	1/8	-AM-MT3-NS2	29.4(1.16)	9.7(0.38)	1.8(0.07)	12.0(0.47)
4	1/8	-AM-MT4-NS2	29.4(1.16)	9.7(0.38)	2.4(0.09)	12.0(0.47)
6	1/8	-AM-MT6-NS2	32.8(1.29)	9.7(0.38)	4.1(0.16)	12.0(0.47)
6	1/4	-AM-MT6-NS4	38.1(1.50)	14.2(0.56)	4.1(0.16)	14.0(0.55)
6	3/8	-AM-MT6-NS6	39.2(1.54)	14.2(0.56)	4.1(0.16)	18.0(0.71)
6	1/2	-AM-MT6-NS8	42.1(1.66)	19.1(0.75)	4.1(0.16)	22.0(0.87)
8	1/4	-AM-MT8-NS4	39.1(1.54)	14.2(0.56)	5.6(0.22)	14.0(0.55)
8	3/8	-AM-MT8-NS6	39.9(1.57)	14.2(0.56)	5.6(0.22)	19.0(0.75)
10	1/4	-AM-MT10-NS4	39.9(1.57)	14.2(0.56)	7.1(0.28)	14.0(0.55)
10	3/8	-AM-MT10-NS6	40.6(1.60)	14.2(0.56)	7.1(0.28)	18.0(0.71)
10	1/2	-AM-MT10-NS8	46.2(1.82)	19.1(0.75)	7.1(0.28)	22.0(0.87)
12	1/4	-AM-MT12-NS4	46.5(1.83)	14.2(0.56)	7.1(0.28)	14.0(0.55)
12	3/8	-AM-MT12-NS6	46.2(1.82)	14.2(0.56)	8.8(0.35)	18.0(0.71)
12	1/2	-AM-MT12-NS8	52.1(2.05)	19.1(0.75)	8.8(0.35)	22.0(0.87)
16	1/2	-AM-MT16-NS8	50.8(2.00)	19.1(0.75)	11.9(0.47)	22.0(0.87)
16	3/4	-AM-MT16-NS12	51.6(2.03)	19.1(0.75)	12.0(0.47)	27.0(1.06)
18	1/2	-AM-MT18-NS8	50.8(2.00)	19.1(0.75)	11.9(0.47)	27.0(1.06)
18	3/4	-AM-MT18-NS12	51.6(2.03)	19.1(0.75)	14.0(0.55)	27.0(1.06)
20	1/2	-AM-MT20-NS8	53.3(2.1)	19.1(0.75)	11.9(0.47)	22.0(0.87)
20	3/4	-AM-MT20-NS12	53.8(2.12)	19.1(0.75)	15.5(0.61)	27.0(1.06)
25	1	-AM-MT25-NS16	65.9(2.59)	23.9(0.94)	19.8(0.78)	35.0(1.38)
28	1	-AM-AMT28-NS16	74.7(2.94)	23.9(0.94)	22.2(0.87)	35.0(1.38)
28	1 1/4	-AM-AMT28-NS20	76.2(3.00)	23.9(0.94)	22.5(0.89)	46.0(1.81)
30	1	-AM-AMT30-NS16	79.2(3.12)	23.9(0.94)	22.2(0.87)	41.0(1.61)
30	1 1/4	-AM-AMT30-NS20	80.0(3.15)	23.9(0.94)	24.3(0.96)	46.0(1.81)
32	1 1/4	-AM-AMT32-NS20	81.0(3.19)	23.9(0.94)	26.5(1.04)	46.0(1.81)
38	1 1/2	-AM-AMT38-NS24	92.2(3.63)	26.2(1.03)	31.6(1.24)	55.0(2.17)

Metric Tube						ISO Tapered Thread (RT)
T-Tube O.D. (mm)	P-RT Size	Basic Ordering Number	Dimensions, mm (in.)			
			L	B	E	F
3	1/8	-AM-MT3-RT2	29.4(1.16)	9.7(0.38)	2.4(0.09)	12.0(0.47)
4	1/8	-AM-MT4-RT2	29.4(1.16)	9.7(0.38)	2.0(0.08)	12.0(0.47)
6	1/8	-AM-MT6-RT2	32.8(1.29)	9.7(0.38)	4.1(0.16)	12.0(0.47)
6	1/4	-AM-MT6-RT4	38.1(1.50)	14.2(0.56)	4.1(0.16)	14.0(0.55)
8	1/4	-AM-MT8-RT4	39.1(1.54)	14.2(0.56)	5.6(0.22)	14.0(0.55)
8	3/8	-AM-MT8-RT6	39.9(1.57)	14.2(0.56)	5.6(0.22)	19.0(0.75)
10	1/4	-AM-MT10-RT4	39.9(1.57)	14.2(0.56)	7.1(0.28)	14.0(0.55)
10	3/8	-AM-MT10-RT6	40.6(1.60)	14.2(0.56)	7.1(0.28)	18.0(0.71)
10	1/2	-AM-MT10-RT8	44.5(1.75)	19.1(0.75)	7.1(0.28)	22.0(0.87)
12	1/4	-AM-MT12-RT4	46.5(1.83)	14.2(0.56)	7.1(0.28)	16.0(0.63)
12	3/8	-AM-MT12-RT6	46.2(1.82)	14.2(0.56)	8.8(0.35)	18.0(0.71)
12	1/2	-AM-MT12-RT8	51.8(2.04)	19.1(0.75)	8.8(0.35)	22.0(0.87)
16	1/2	-AM-MT16-RT8	50.8(2.00)	19.1(0.75)	11.9(0.47)	22.0(0.87)
18	3/4	-AM-MT18-RT12	51.6(2.03)	19.1(0.75)	14.0(0.55)	27.0(1.06)
20	3/4	-AM-MT20-RT12	52.4(2.06)	19.1(0.75)	15.50(0.61)	27.0(1.06)
25	1	-AM-MT25-RT16	65.9(2.59)	23.9(0.94)	19.8(0.78)	35.0(1.38)
28	1	-AM-AMT28-RT16	74.7(2.94)	23.9(0.94)	22.2(0.87)	35.0(1.38)
28	1 1/4	-AM-AMT28-RT20	76.2(3.00)	23.9(0.94)	22.5(0.89)	46.0(1.81)
30	1 1/4	-AM-AMT30-RT20	80.0(3.15)	23.9(0.94)	24.3(0.96)	46.0(1.81)
32	1 1/4	-AM-AMT32-RT20	81.0(3.19)	23.9(0.94)	26.5(1.04)	46.0(1.81)
38	1 1/2	-AM-AMT38-RT24	92.2(3.63)	26.2(1.03)	31.6(1.24)	55.0(2.17)

Male Adapters

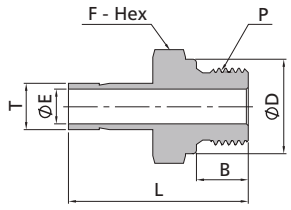

25 mm and below

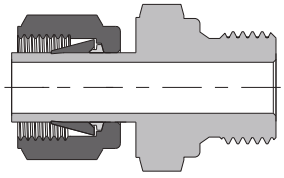

28 mm and above

The E dimension refers to the smallest nominal orifice. It might be larger at tapered thread end, straight thread end.

Metric Tube			ISO Parallel Thread (RS)				
T-Tube O.D. (mm)	P-RS Size	Basic Ordering Number	Dimensions, mm (in.)				
			L	B	E	F	D
3	1/8	-AM-MT3-RS2	31.0(1.22)	7.1(0.28)	1.8(0.07)	14.0(0.55)	13.7(0.54)
4	1/8	-AM-MT4-RS2	31.8(1.25)	7.1(0.28)	2.4(0.09)	14.0(0.55)	13.7(0.54)
6	1/8	-AM-MT6-RS2	34.3(1.35)	7.1(0.28)	4.0(0.16)	14.0(0.55)	13.7(0.54)
6	1/4	-AM-MT6-RS4	39.1(1.54)	11.2(0.44)	4.1(0.16)	19.0(0.75)	17.8(0.70)
8	1/4	-AM-MT8-RS4	39.6(1.56)	11.2(0.44)	5.6(0.22)	19.0(0.75)	17.8(0.70)
10	1/4	-AM-MT10-RS4	40.9(1.61)	11.2(0.44)	5.9(0.23)	19.0(0.75)	17.8(0.70)
10	3/8	-AM-MT10-RS6	41.7(1.64)	11.2(0.44)	7.1(0.28)	22.0(0.87)	21.6(0.85)
10	1/2	-AM-MT10-RS8	44.7(1.76)	14.2(0.56)	7.1(0.28)	27.0(1.06)	25.9(1.02)
12	1/4	-AM-MT12-RS4	46.7(1.84)	11.2(0.44)	5.9(0.23)	19.0(0.75)	17.8(0.70)
12	3/8	-AM-MT12-RS6	47.2(1.86)	11.2(0.44)	7.9(0.31)	22.0(0.87)	21.6(0.85)
12	1/2	-AM-MT12-RS8	50.5(1.99)	14.2(0.56)	8.8(0.35)	27.0(1.06)	25.9(1.02)
16	1/2	-AM-MT16-RS8	50.8(2.00)	14.2(0.56)	11.9(0.47)	27.0(1.06)	25.9(1.02)
18	3/4	-AM-MT18-RS12	55.9(2.20)	16.0(0.63)	13.9(0.55)	35.0(1.38)	32.0(1.26)
20	3/4	-AM-MT20-RS12	57.0(2.24)	16.0(0.63)	15.5(0.61)	35.0(1.38)	32.0(1.26)
25	1	-AM-MT25-RS16	65.1(2.56)	18.3(0.72)	19.8(0.78)	41.0(1.61)	38.9(1.53)
28	1	-AM-AMT28-RS16	71.9(2.83)	18.3(0.72)	19.8(0.78)	41.0(1.61)	38.9(1.53)
28	1 1/4	-AM-AMT28-RS20	77.0(3.03)	19.8(0.78)	22.5(0.89)	50.0(1.97)	49.0(1.93)
30	1 1/4	-AM-AMT30-RS20	80.8(3.18)	19.8(0.78)	24.3(0.96)	50.0(1.97)	49.0(1.93)
32	1 1/4	-AM-AMT32-RS20	81.8(3.22)	19.8(0.78)	26.5(1.04)	50.0(1.97)	49.0(1.93)
38	1 1/2	-AM-AMT38-RS24	94.5(3.72)	20.6(0.81)	31.6(1.24)	55.0(2.17)	54.7(2.15)

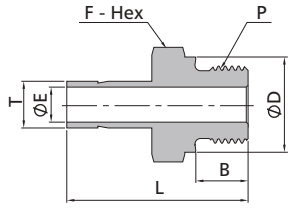

25 mm and below

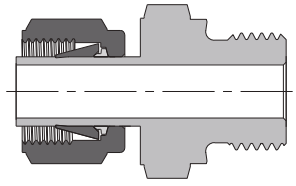

28 mm and above

The E dimension refers to the smallest nominal orifice. It might be larger at tapered thread end, straight thread end.

Metric Tube			ISO Parallel Thread (RP)				
T-Tube O.D. (mm)	P-RP Size	Basic Ordering Number	Dimensions, mm (in.)				
			L	B	E	F	D
3	1/8	-AM-MT3-RP2	31.0(1.22)	7.1(0.28)	1.8(0.07)	14.0(0.55)	13.7(0.54)
4	1/8	-AM-MT4-RP2	31.8(1.25)	7.1(0.28)	2.0(0.08)	14.0(0.55)	13.7(0.54)
6	1/8	-AM-MT6-RP2	34.3(1.35)	7.1(0.28)	4.0(0.16)	14.0(0.55)	13.7(0.54)
6	1/4	-AM-MT6-RP4	38.1(1.50)	11.2(0.44)	4.0(0.16)	19.0(0.75)	17.8(0.70)
8	1/4	-AM-MT8-RP4	38.9(1.53)	11.2(0.44)	5.6(0.22)	19.0(0.75)	17.8(0.70)
10	1/4	-AM-MT10-RP4	38.9(1.53)	11.2(0.44)	6.4(0.25)	19.0(0.75)	17.8(0.70)
10	3/8	-AM-MT10-RP6	39.7(1.56)	11.2(0.44)	7.1(0.28)	22.0(0.87)	21.6(0.85)
10	1/2	-AM-MT10-RP8	42.9(1.69)	14.2(0.56)	7.1(0.28)	27.0(1.06)	25.9(1.02)
12	1/4	-AM-MT12-RP4	43.7(1.72)	11.2(0.44)	6.4(0.25)	19.0(0.75)	17.8(0.70)
12	3/8	-AM-MT12-RP6	44.5(1.75)	11.2(0.44)	7.9(0.31)	22.0(0.87)	21.6(0.85)
12	1/2	-AM-MT12-RP8	49.2(1.94)	14.2(0.56)	9.1(0.36)	27.0(1.06)	25.9(1.02)
16	1/2	-AM-MT16-RP8	50.8(2.00)	14.2(0.56)	11.9(0.47)	27.0(1.06)	25.9(1.02)
18	3/4	-AM-MT18-RP12	53.2(2.09)	16.0(0.63)	14.0(0.55)	33.0(1.30)	32.0(1.26)
20	3/4	-AM-MT20-RP12	54.0(2.13)	16.0(0.63)	15.5(0.61)	33.0(1.30)	32.0(1.26)
25	1	-AM-MT25-RP16	65.1(2.56)	18.3(0.72)	19.8(0.78)	41.0(1.61)	38.9(1.53)
28	1	-AM-AMT28-RP16	72.7(2.86)	18.3(0.72)	19.8(0.78)	41.0(1.61)	38.9(1.53)
28	1 1/4	-AM-AMT28-RP20	77.3(3.04)	19.8(0.78)	22.5(0.89)	50.0(1.97)	49.0(1.93)
30	1 1/4	-AM-AMT30-RP20	80.8(3.18)	19.8(0.78)	24.3(0.96)	50.0(1.97)	49.0(1.93)
32	1 1/4	-AM-AMT32-RP20	82.1(3.23)	19.8(0.78)	26.5(1.04)	50.0(1.97)	49.0(1.93)
38	1 1/2	-AM-AMT38-RP24	94.5(3.72)	20.6(0.81)	31.6(1.24)	55.0(2.17)	54.7(2.15)

Female Adapters

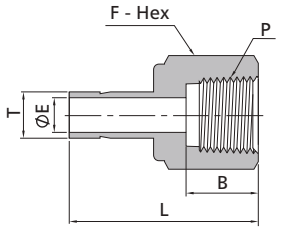

1" and below

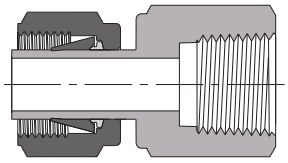

1 1/4" and above

Fractional Tube						NPT Thread
T-Tube O.D. (in.)	P-NPT Size	Basic Ordering Number	Dimensions, in. (mm)			
			L	B	E	F
1/16	1/8	-AF-FT1-NS2	1.07(27.2)	0.41(10.4)	0.03(0.8)	0.56(14.3)
1/8	1/8	-AF-FT2-NS2	1.24(31.5)	0.41(10.4)	0.08(2.0)	0.56(14.3)
1/8	1/4	-AF-FT2-NS4	1.39(35.3)	0.59(15.0)	0.08(2.0)	0.75(19.1)
3/16	1/8	-AF-FT3-NS2	1.25(31.8)	0.41(10.4)	0.11(2.9)	0.56(14.3)
3/16	1/4	-AF-FT3-NS4	1.41(35.8)	0.59(15.0)	0.12(3.0)	0.75(19.1)
1/4	1/8	-AF-FT4-NS2	1.30(33.0)	0.41(10.4)	0.17(4.3)	0.56(14.3)
1/4	1/4	-AF-FT4-NS4	1.46(37.1)	0.59(15.0)	0.17(4.3)	0.75(19.1)
1/4	3/8	-AF-FT4-NS6	1.55(39.4)	0.59(15.0)	0.17(4.3)	0.87(22.2)
1/4	1/2	-AF-FT4-NS8	1.79(45.5)	0.78(19.8)	0.17(4.3)	1.06(27.0)
5/16	1/8	-AF-FT5-NS2	1.34(34.0)	0.41(10.4)	0.22(5.6)	0.56(14.3)
5/16	1/4	-AF-FT5-NS4	1.48(37.6)	0.59(15.0)	0.22(5.6)	0.75(19.1)
5/16	3/8	-AF-FT5-NS6	1.59(40.4)	0.59(15.0)	0.22(5.6)	0.87(22.2)
3/8	1/8	-AF-FT6-NS2	1.35(34.3)	0.41(10.4)	0.27(6.9)	0.56(14.3)
3/8	1/4	-AF-FT6-NS4	1.50(38.1)	0.59(15.0)	0.27(6.9)	0.75(19.1)
3/8	3/8	-AF-FT6-NS6	1.59(40.4)	0.59(15.0)	0.27(6.9)	0.87(22.2)
3/8	1/2	-AF-FT6-NS8	1.84(46.7)	0.78(19.8)	0.27(6.9)	1.06(27.0)
1/2	1/4	-AF-FT8-NS4	1.71(43.4)	0.59(15.0)	0.37(9.4)	0.75(19.1)
1/2	3/8	-AF-FT8-NS6	1.79(45.5)	0.59(15.0)	0.37(9.4)	0.87(22.2)
1/2	1/2	-AF-FT8-NS8	2.04(51.8)	0.78(19.8)	0.37(9.4)	1.06(27.0)
5/8	3/8	-AF-FT10-NS6	1.86(47.2)	0.59(15.0)	0.47(11.9)	0.87(22.2)
5/8	1/2	-AF-FT10-NS8	2.09(53.1)	0.78(19.8)	0.47(11.9)	1.06(27.0)
3/4	1/2	-AF-FT12-NS8	2.08(52.8)	0.78(19.8)	0.58(14.7)	1.06(27.0)
3/4	3/4	-AF-FT12-NS12	2.16(54.9)	0.81(20.6)	0.58(14.7)	1.31(33.3)
3/4	1	-AF-FT12-NS16	2.30(58.4)	1.00(25.4)	0.58(14.7)	1.63(41.3)
7/8	3/4	-AF-FT14-NS12	2.22(56.4)	0.81(20.6)	0.58(14.7)	1.31(33.3)
1	3/4	-AF-FT16-NS12	2.39(60.7)	0.81(20.6)	0.80(20.3)	1.31(33.3)
1	1	-AF-FT16-NS16	2.53(64.3)	1.00(25.4)	0.80(20.3)	1.63(41.3)
1 1/4	1 1/4	-AF-AFT20-NS20	3.06(77.7)	1.00(25.4)	1.02(25.9)	2.13(54.0)
1 1/2	1 1/2	-AF-AFT24-NS24	3.50(88.9)	1.09(27.7)	1.25(31.8)	2.37(60.3)

Fractional Tube						ISO Tapered Thread (RT)
T-Tube O.D. (in.)	P-RT Size	Basic Ordering Number	Dimensions, in. (mm)			
			L	B	E	F
1/4	1/8	-AF-FT4-RT2	1.30(33.0)	0.41(10.4)	0.17(4.3)	0.56(14.3)
1/4	1/4	-AF-FT4-RT4	1.45(36.8)	0.59(15.0)	0.17(4.3)	0.75(19.1)
3/8	1/4	-AF-FT6-RT4	1.50(38.1)	0.59(15.0)	0.27(6.9)	0.75(19.1)
3/8	3/8	-AF-FT6-RT6	1.59(40.4)	0.59(15.0)	0.27(6.9)	0.87(22.2)
1/2	1/4	-AF-FT8-RT4	1.71(43.4)	0.59(15.0)	0.37(9.4)	0.75(19.1)
1/2	3/8	-AF-FT8-RT6	1.80(45.7)	0.59(15.0)	0.37(9.4)	0.87(22.2)
1/2	1/2	-AF-FT8-RT8	2.05(52.1)	0.78(19.8)	0.37(9.4)	1.06(27.0)

Female Adapters

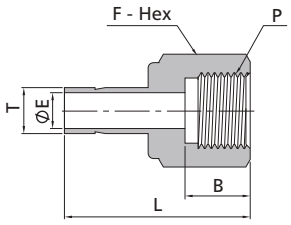

Fractional Tube			ISO Parallel Thread (RP)			
T-Tube O.D. (in.)	P-RP Size	Basic Ordering Number	Dimensions, in. (mm)			
			L	B	E	F
1/8	1/8	-AF-FT2-RP2	1.17(29.7)	0.40(10.2)	0.08(2.0)	0.56(14.3)
1/4	1/8	-AF-FT4-RP2	1.25(31.8)	0.40(10.2)	0.17(4.3)	0.56(14.3)
1/4	1/4	-AF-FT4-RP4	1.50(38.1)	0.61(15.5)	0.17(4.3)	0.75(19.1)
3/8	1/4	-AF-FT6-RP4	1.55(39.4)	0.61(15.5)	0.27(6.9)	0.75(19.1)
3/8	3/8	-AF-FT6-RP6	1.57(39.9)	0.60(15.2)	0.27(6.9)	0.94(23.8)
1/2	3/8	-AF-FT8-RP6	1.78(45.2)	0.60(15.2)	0.38(9.7)	0.94(23.8)
1/2	1/2	-AF-FT8-RP8	1.95(49.5)	0.73(18.5)	0.38(9.7)	1.06(27.0)

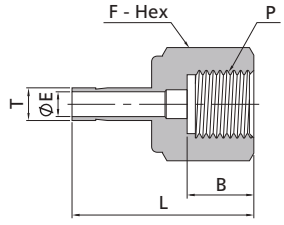

Fractional Tube			ISO Parallel Thread (RG)			
T-Tube O.D. (in.)	P-RG Size	Basic Ordering Number	Dimensions, in. (mm)			
			L	B	E	F
1/4	1/4	-AF-FT4-RG4	1.39(35.3)	0.51(12.9)	0.17(4.3)	0.75(19.1)
3/8	3/8	-AF-FT6-RG6	1.55(39.4)	0.56(14.2)	0.26(6.6)	0.94(23.8)
1/2	1/2	-AF-FT8-RG8	1.80(45.7)	0.74(18.8)	0.28(7.1)	1.06(27.0)

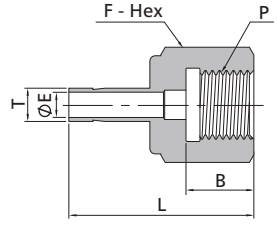

Adapt to Japanese gauge stud.

Fractional Tube			ISO Parallel Thread (RJ)			
T-Tube O.D. (in.)	P-RJ Size	Basic Ordering Number	Dimensions, in. (mm)			
			L	B	E	F
1/4	1/4	-AF-FT4-RJ4	1.39(35.3)	0.51(12.9)	0.17(4.3)	0.75(19.1)
3/8	3/8	-AF-FT6-RJ6	1.55(39.4)	0.62(15.8)	0.26(6.6)	0.94(23.8)
1/2	1/2	-AF-FT8-RJ8	1.94(49.3)	0.74(18.8)	0.28(7.1)	1.06(27.0)

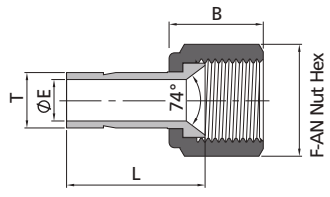

Fractional Tube			AN Thread			
T-Tube O.D. (in.)	AN Tube Flare Size(in.)	Basic Ordering Number	Dimensions, in. (mm)			
			L	B	E	F
1/8	1/8	-AF-FT2-AN2	0.88(22.4)	0.55(14.0)	0.08(2.0)	0.37(9.5)
1/8	1/4	-AF-FT2-AN4	0.88(22.4)	0.62(15.8)	0.16(4.0)	0.56(14.3)
1/4	1/4	-AF-FT4-AN4	0.96(24.4)	0.62(15.8)	0.18(4.6)	0.56(14.3)
3/8	3/8	-AF-FT6-AN6	0.98(24.9)	0.73(18.5)	0.27(6.8)	0.75(19.05)
1/2	1/2	-AF-FT8-AN8	1.42(36.1)	0.85(21.6)	0.37(9.4)	0.87(22.2)
3/4	3/4	-AF-FT12-AN12	1.49(37.8)	1.03(26.2)	0.58(14.7)	1.25(31.8)

Female Adapters

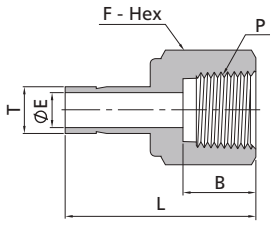

Metric Tube						NPT Thread
T-Tube O.D. (mm)	P-NPT Size	Basic Ordering Number	Dimensions, mm (in.)			
			L	B	E	F
3	1/8	-AF-MT3-NS2	28.8(1.13)	10.4(0.41)	1.3(0.05)	14.0(0.55)
4	1/8	-AF-MT4-NS2	33.3(1.31)	10.4(0.41)	2.4(0.09)	14.0(0.55)
6	1/8	-AF-MT6-NS2	32.5(1.28)	10.4(0.41)	4.1(0.16)	14.0(0.55)
6	1/4	-AF-MT6-NS4	37.1(1.46)	15.0(0.59)	4.1(0.16)	19.0(0.75)
8	1/8	-AF-MT8-NS2	35.1(1.38)	10.4(0.41)	5.6(0.22)	14.0(0.55)
8	1/4	-AF-MT8-NS4	37.6(1.48)	15.0(0.59)	5.6(0.22)	19.0(0.75)
8	3/8	-AF-MT8-NS6	36.5(1.44)	15.0(0.59)	5.6(0.22)	22.0(0.87)
10	1/4	-AF-MT10-NS4	38.1(1.50)	15.0(0.59)	7.1(0.28)	19.0(0.75)
10	3/8	-AF-MT10-NS6	40.1(1.58)	15.0(0.59)	7.1(0.28)	22.0(0.87)
10	1/2	-AF-MT10-NS8	46.5(1.83)	19.8(0.78)	7.1(0.28)	27.0(1.06)
12	1/4	-AF-MT12-NS4	43.7(1.72)	15.0(0.59)	8.8(0.35)	19.0(0.75)
12	3/8	-AF-MT12-NS6	42.9(1.69)	15.0(0.59)	8.8(0.35)	22.0(0.87)
12	1/2	-AF-MT12-NS8	52.3(2.06)	19.8(0.78)	8.8(0.35)	27.0(1.06)
16	1/2	-AF-MT16-NS8	49.2(1.94)	19.8(0.78)	12.0(0.47)	27.0(1.06)
18	3/4	-AF-MT18-NS12	52.4(2.06)	20.6(0.81)	14.0(0.55)	32.0(1.26)
20	1/2	-AF-MT20-NS8	50.0(1.97)	19.8(0.78)	15.5(0.61)	27.0(1.06)
20	3/4	-AF-MT20-NS12	57.2(2.25)	20.6(0.81)	15.5(0.61)	35.0(1.38)
25	1	-AF-MT25-NS16	66.7(2.63)	25.4(1.00)	19.8(0.78)	41.0(1.61)

Metric Tube						ISO Tapered Thread (RT)
T-Tube O.D. (mm)	P-RT Size	Basic Ordering Number	Dimensions, mm (in.)			
			L	B	E	F
3	1/8	-AF-MT3-RT2	28.8(1.13)	10.4(0.41)	1.8(0.07)	14.0(0.55)
4	1/8	-AF-MT4-RT2	28.6(1.13)	10.4(0.41)	2.4(0.09)	14.0(0.55)
6	1/8	-AF-MT6-RT2	33.0(1.30)	10.4(0.41)	4.1(0.16)	14.0(0.55)
8	1/4	-AF-MT8-RT4	37.6(1.48)	15.0(0.59)	5.6(0.22)	19.0(0.75)
10	1/4	-AF-MT10-RT4	38.1(1.50)	15.0(0.59)	7.1(0.28)	19.0(0.75)
10	3/8	-AF-MT10-RT6	36.5(1.44)	15.0(0.59)	7.1(0.28)	22.0(0.87)
10	1/2	-AF-MT10-RT8	41.3(1.63)	19.8(0.78)	7.1(0.28)	27.0(1.06)
12	1/4	-AF-MT12-RT4	43.7(1.72)	15.0(0.59)	8.8(0.35)	19.0(0.75)
12	3/8	-AF-MT12-RT6	43.7(1.72)	15.0(0.59)	8.8(0.35)	22.0(0.87)
12	1/2	-AF-MT12-RT8	46.8(1.84)	19.8(0.78)	8.8(0.35)	27.0(1.06)
16	1/2	-AF-MT16-RT8	48.4(1.91)	19.8(0.78)	12.0(0.47)	27.0(1.06)
18	3/4	-AF-MT18-RT12	52.4(2.06)	20.6(0.81)	14.0(0.55)	32.0(1.26)
20	3/4	-AF-MT20-RT12	52.4(2.06)	20.6(0.81)	15.5(0.61)	32.0(1.26)
25	1	-AF-MT25-RT16	66.7(2.63)	25.4(1.00)	19.8(0.78)	41.0(1.61)

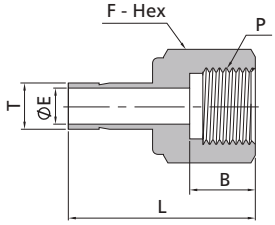

Metric Tube						ISO Parallel Thread (RP)
T-Tube O.D. (mm)	P-RP Size	Basic Ordering Number	Dimensions, mm (in.)			
			L	B	E	F
6	1/8	-AF-MT6-RP2	32.0(1.26)	10.2(0.40)	4.1(0.16)	14.0(0.55)
6	1/4	-AF-MT6-RP4	37.8(1.49)	15.2(0.60)	4.1(0.16)	19.0(0.75)
12	1/2	-AF-MT12-RP8	49.8(1.96)	18.8(0.74)	8.8(0.35)	27.0(1.06)

Female Adapters

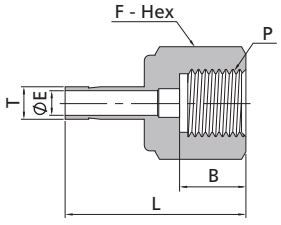

Metric Tube			ISO Parallel Thread (RG)			
T-Tube O.D. (mm)	P-RG Size	Basic Ordering Number	Dimensions, mm (in.)			
			L	B	E	F
3	1/8	-AF-MT3-RG2	28.6(1.13)	9.8(0.39)	1.9(0.07)	14.0(0.55)
3	1/4	-AF-MT3-RG4	33.5(1.32)	12.9(0.50)	1.9(0.07)	19.0(0.75)
4	1/8	-AF-MT4-RG2	29.4(1.16)	9.8(0.39)	2.4(0.09)	14.0(0.55)
6	1/8	-AF-MT6-RG2	29.1(1.15)	9.8(0.39)	4.1(0.16)	14.0(0.55)
6	1/4	-AF-MT6-RG4	35.3(1.39)	12.9(0.50)	4.1(0.16)	19.0(0.75)
6	3/8	-AF-MT6-RG6	38.4(1.51)	14.2(0.56)	4.1(0.16)	24.0(0.94)
6	1/2	-AF-MT6-RG8	42.9(1.69)	18.8(0.74)	4.1(0.16)	27.0(1.06)
8	1/4	-AF-MT8-RG4	33.0(1.30)	12.9(0.50)	5.5(0.22)	19.0(0.75)
8	3/8	-AF-MT8-RG6	38.9(1.53)	14.2(0.56)	5.6(0.22)	24.0(0.94)
8	1/2	-AF-MT8-RG8	43.7(1.72)	18.8(0.74)	5.6(0.22)	27.0(1.06)
10	1/4	-AF-MT10-RG4	34.5(1.36)	12.9(0.50)	5.5(0.22)	19.0(0.75)
10	3/8	-AF-MT10-RG6	36.1(1.42)	14.2(0.56)	6.5(0.26)	24.0(0.94)
10	1/2	-AF-MT10-RG8	41.1(1.62)	18.8(0.74)	7.1(0.28)	27.0(1.06)
12	1/4	-AF-MT12-RG4	40.1(1.58)	12.9(0.50)	5.5(0.22)	19.0(0.75)
12	3/8	-AF-MT12-RG6	44.7(1.76)	14.2(0.56)	6.5(0.26)	24.0(0.94)
12	1/2	-AF-MT12-RG8	48.8(1.92)	18.8(0.74)	7.0(0.28)	27.0(1.06)
16	1/2	-AF-MT16-RG8	49.0(1.93)	18.8(0.74)	7.0(0.28)	27.0(1.06)
18	1/2	-AF-MT18-RG8	49.3(1.94)	18.8(0.74)	7.0(0.28)	27.0(1.06)

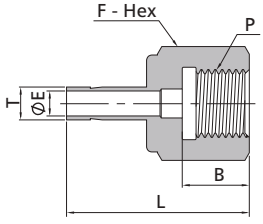

Adapt to Japanese gauge stud.

Metric Tube			ISO Parallel Thread (RJ)			
T-Tube O.D. (mm)	P-RJ Size	Basic Ordering Number	Dimensions, mm (in.)			
			L	B	E	F
6	1/4	-AF-MT6-RJ4	35.3(1.39)	12.9(0.50)	4.1(0.16)	19.0(0.75)
6	3/8	-AF-MT6-RJ6	38.6(1.52)	15.8(0.62)	4.1(0.16)	24.0(0.94)
6	1/2	-AF-MT6-RJ8	42.9(1.69)	18.8(0.74)	4.1(0.16)	27.0(1.06)
8	1/4	-AF-MT8-RJ4	33.0(1.30)	12.9(0.50)	5.5(0.22)	19.0(0.75)
8	3/8	-AF-MT8-RJ6	39.4(1.55)	15.8(0.62)	5.6(0.22)	24.0(0.94)
8	1/2	-AF-MT8-RJ8	43.7(1.72)	18.8(0.74)	5.6(0.22)	27.0(1.06)
10	1/4	-AF-MT10-RJ4	34.5(1.36)	12.9(0.50)	5.5(0.22)	19.0(0.75)
10	3/8	-AF-MT10-RJ6	36.1(1.42)	15.8(0.62)	6.5(0.26)	24.0(0.94)
10	1/2	-AF-MT10-RJ8	41.1(1.62)	18.8(0.74)	7.1(0.28)	27.0(1.06)
12	1/4	-AF-MT12-RJ4	40.1(1.58)	12.9(0.50)	5.5(0.22)	19.0(0.75)
12	3/8	-AF-MT12-RJ6	44.7(1.76)	15.8(0.62)	6.5(0.26)	24.0(0.94)
12	1/2	-AF-MT12-RJ8	48.8(1.92)	18.8(0.74)	7.0(0.28)	27.0(1.06)

Weld Adapters

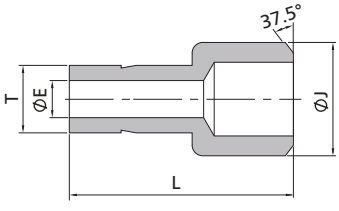

Fractional Tube			Pipe Weld		
T-Tube O.D. (in.)	Pipe Weld Size	Basic Ordering Number	Dimensions, in. (mm)		
			L	J	E
1/4	1/4	-AW-FT4-PB4	1.14(29.0)	0.54(13.7)	0.17(4.3)
3/8	1/2	-AW-FT6-PB8	1.46(37.1)	0.84(21.3)	0.27(6.9)
1/2	1/2	-AW-FT8-PB8	1.66(42.2)	0.84(21.3)	0.37(9.4)
1/2	3/4	-AW-FT8-PB12	1.68(42.7)	1.05(26.7)	0.37(9.4)
3/4	3/4	-AW-FT12-PB12	1.87(47.5)	1.05(26.7)	0.58(14.7)

Note: The nominal wall thickness of pipe welding ends is SCH80.

Flange Adapters

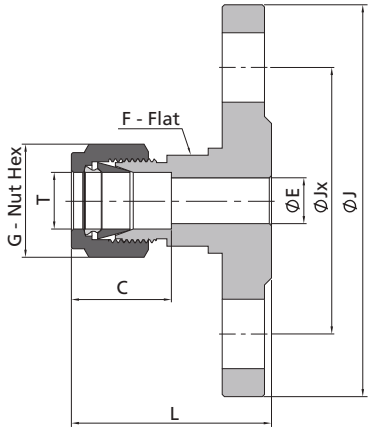

- Integrally forged body.
- ASME flanges comply withASME B16.5.
- DIN flanges comply withDIN 2501/2526.
- GB flanges comply withGB/T 9123.1.
- EN flanges comply withEN 1092-1.
- JIS flanges comply withJIS B 2220.

ASME Flanges

T-Tube O.D. (in.)	ASME Flange NPS	Class	Basic Ordering Number Raised Face Flange	Dimensions, in. (mm)						
				L	J	Jx	E	C	G	F
1/4	1/2	150	-FA-FL4-F8-150	1.61(40.9)	3.50(88.9)	2.38(60.5)	0.19(4.8)	0.60(15.2)	0.56(14.3)	0.81(20.6)
3/8	1/2	300	-FA-FL6-F8-300	1.79(45.5)	3.75(95.3)	2.62(66.5)	0.28(7.1)	0.66(16.8)	0.69(17.5)	0.81(20.6)
1/2	1/2	150	-FA-FL8-F8-150	1.78(45.2)	3.50(88.9)	2.38(60.5)	0.41(10.4)	0.90(22.9)	0.87(22.2)	0.81(20.6)
1/2	1	150	-FA-FL8-F16-150	1.90(48.3)	4.25(108.0)	3.12(79.2)	0.41(10.4)	0.90(22.9)	0.87(22.2)	0.81(20.6)
1/2	2	150	-FA-FL8-F32-150	2.09(53.1)	6.00(152.4)	4.76(121.0)	0.41(10.4)	0.90(22.9)	0.87(22.2)	0.81(20.6)
3/4	1	150	-FA-FL12-F16-150	1.98(50.3)	4.25(108.0)	3.12(79.2)	0.62(15.7)	0.96(24.4)	1.13(28.6)	1.25(31.8)
1	1	150	-FA-FL16-F16-150	2.38(60.5)	4.25(108.0)	3.12(79.2)	0.88(22.4)	1.23(31.2)	1.50(38.1)	1.37(34.9)

DIN/GB Flanges, Pressure Class PN 40

T-Tube O.D. (mm)	DIN Flange Size DN	Basic Ordering Number Raised Face Flange	Dimensions, mm (in.)						
			L	J	Jx	E	C	G	F
6	25	-FA-ML6-F25-40B1	47.5(1.87)	115.0(4.53)	85.0(3.35)	4.8(0.19)	15.3(0.60)	14.0(0.55)	20.0(0.79)
12	15	-FA-ML12-F15-40B1	48.5(1.91)	95.0(3.74)	65.0(2.56)	9.5(0.37)	22.8(0.90)	22.0(0.87)	20.0(0.79)
12	25	-FA-ML12-F25-40B1	50.5(1.99)	115.0(4.53)	85.0(3.35)	9.5(0.37)	22.8(0.90)	22.0(0.87)	20.0(0.79)
12	50	-FA-ML12-F50-40B1	55.3(2.18)	165.0(6.50)	125.0(4.92)	9.5(0.37)	22.8(0.90)	22.0(0.87)	20.0(0.79)
18	15	-FA-ML18-F15-40B1	51.8(2.04)	95.0(3.74)	65.0(2.56)	15.1(0.59)	24.4(0.96)	30.0(1.18)	32.0(1.26)
18	25	-FA-ML18-F25-40B1	53.8(2.12)	115.0(4.53)	85.0(3.35)	15.1(0.59)	24.4(0.96)	30.0(1.18)	32.0(1.26)
25	25	-FA-ML25-F25-40B1	64.0(2.52)	115.0(4.53)	85.0(3.35)	21.8(0.86)	31.3(1.23)	38.0(1.50)	35.0(1.38)

Flange Adapters

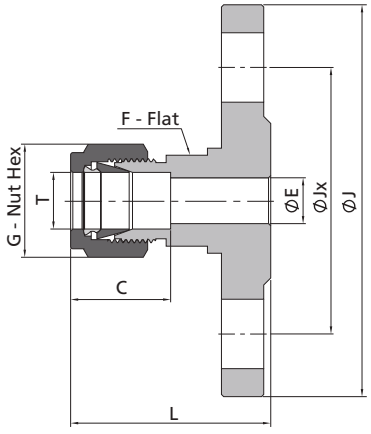

- Integrally forged body.
- ASME flanges comply withASME B16.5.
- DIN flanges comply withDIN 2501/2526.
- GB flanges comply withGB/T 9123.1.
- EN flanges comply withEN 1092-1.
- JIS flanges comply withJIS B 2220.

EN Flanges, Pressure Class PN 40

T-Tube O.D. (mm)	EN Flange Size DN	Basic Ordering Number Raised Face Flange	Dimensions, mm (in.)						
			L	J	Jx	E	C	G	F
6	25	-FA-ML6-F25E-40B1	47.5(1.87)	115.0(4.53)	85.0(3.35)	4.8(0.19)	15.3(0.60)	14.0(0.55)	20.0(0.79)
12	15	-FA-ML12-F15E-40B1	48.5(1.91)	95.0(3.74)	65.0(2.56)	9.5(0.37)	22.8(0.90)	22.0(0.87)	20.0(0.79)
12	25	-FA-ML12-F25E-40B1	50.5(1.99)	115.0(4.53)	85.0(3.35)	9.5(0.37)	22.8(0.90)	22.0(0.87)	20.0(0.79)
12	50	-FA-ML12-F50E-40B1	55.3(2.18)	165.0(6.50)	125.0(4.92)	9.5(0.37)	22.8(0.90)	22.0(0.87)	20.0(0.79)
18	15	-FA-ML18-F15E-40B1	51.8(2.04)	95.0(3.74)	65.0(2.56)	15.1(0.59)	24.4(0.96)	30.0(1.18)	32.0(1.26)
18	25	-FA-ML18-F25E-40B1	53.8(2.12)	115.0(4.53)	85.0(3.35)	15.1(0.59)	24.4(0.96)	30.0(1.18)	32.0(1.26)
25	25	-FA-ML25-F25E-40B1	64.0(2.52)	115.0(4.53)	85.0(3.35)	21.8(0.86)	31.3(1.23)	38.0(1.50)	35.0(1.38)

JIS Flanges, Pressure Class 10K

T-Tube O.D.	JIS Flange Size DN	Basic Ordering Number Raised Face Flange	Dimensions, in. (mm)						
			L	J	Jx	E	C	G	F
1/4"	15	-FA-FL4-F15-10KRF	1.66(42.2)	3.74(95.0)	2.76(70.1)	0.19(4.8)	0.60(15.2)	0.56(14.3)	0.81(20.6)
3/8"	15	-FA-FL6-F15-10KRF	1.72(43.7)	3.74(95.0)	2.76(70.1)	0.28(7.1)	0.66(16.8)	0.69(17.5)	0.81(20.6)
1/2"	15	-FA-FL8-F15-10KRF	1.83(46.5)	3.74(95.0)	2.76(70.1)	0.41(10.4)	0.90(22.9)	0.87(22.2)	0.81(20.6)
3/4"	15	-FA-FL12-F15-10KRF	1.91(48.5)	3.74(95.0)	2.76(70.1)	0.62(15.7)	0.96(24.4)	1.13(28.6)	1.25(31.8)
1"	25	-FA-FL16-F25-10KRF	2.40(61.0)	4.92(125.0)	3.54(89.9)	0.88(22.4)	1.23(31.2)	1.50(38.1)	1.37(34.9)
12mm	15	-FA-ML12-F15-10KRF	1.83(46.5)	3.74(95.0)	2.76(70.0)	0.37(9.5)	0.90(22.8)	0.87(22.0)	0.79(20.0)
18mm	15	-FA-ML18-F15-10KRF	1.91(48.5)	3.74(95.0)	2.76(70.0)	0.59(15.1)	0.96(24.4)	1.18(30.0)	1.26(32.0)
25mm	25	-FA-ML25-F25-10KRF	2.40(61.0)	4.92(125.0)	3.54(90.0)	0.86(21.8)	1.23(31.3)	1.50(38.0)	1.38(35.0)

Weld Connectors

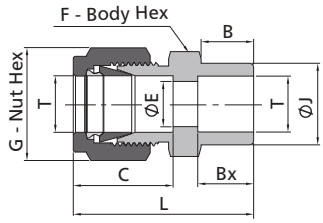

Fractional Tube									Tube Socket Weld
T-Tube O.D. (in.)	Basic Ordering Number	Dimensions, in. (mm)							
		L	C	G	F	B	E	Bx	J
1/8	-CW-FL2-TS2	1.14(29.0)	0.50(12.7)	0.44(11.1)	0.44(11.1)	0.34(8.6)	0.09(2.3)	0.10(2.5)	0.31(7.9)
3/16	-CW-FL3-TS3	1.17(29.7)	0.54(13.7)	0.50(12.7)	0.44(11.1)	0.37(9.5)	0.13(3.3)	0.19(4.8)	0.42(10.7)
1/4	-CW-FL4-TS4	1.32(33.5)	0.60(15.2)	0.56(14.3)	0.50(12.7)	0.41(10.4)	0.19(4.8)	0.28(7.1)	0.48(12.2)
3/8	-CW-FL6-TS6	1.48(37.6)	0.66(16.8)	0.69(17.5)	0.63(15.9)	0.47(11.9)	0.28(7.1)	0.31(7.9)	0.62(15.7)
1/2	-CW-FL8-TS8	1.62(41.1)	0.90(22.9)	0.87(22.2)	0.81(20.6)	0.47(11.9)	0.41(10.4)	0.38(9.7)	0.73(18.5)
5/8	-CW-FL10-TS10	1.65(41.9)	0.96(24.4)	1.00(25.4)	0.94(23.8)	0.47(11.9)	0.50(12.7)	0.41(10.4)	0.92(23.4)
3/4	-CW-FL12-TS12	1.71(43.4)	0.96(24.4)	1.13(28.6)	1.06(27.0)	0.47(11.9)	0.62(15.7)	0.44(11.1)	1.05(26.7)
1	-CW-FL16-TS16	2.07(52.6)	1.23(31.2)	1.50(38.1)	1.37(34.9)	0.56(14.2)	0.88(22.4)	0.62(15.7)	1.36(34.5)

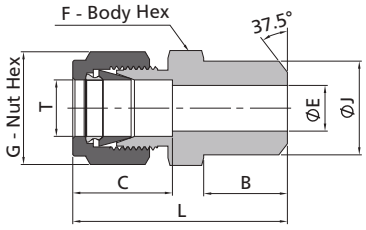

The E dimension refers to the smallest nominal orifice. It might be larger at welding end.

Fractional Tube									Pipe Butt Weld
T-Tube O.D. (in.)	Pipe Weld Size	Basic Ordering Number	Dimensions, in. (mm)						
			L	C	G	F	E	B	J
1/8	1/8	-CW-FL2-PB2	1.20(30.5)	0.50(12.7)	0.44(11.1)	0.44(11.1)	0.09(2.3)	0.38(9.7)	0.41(10.3)
3/16	1/8	-CW-FL3-PB2	1.23(31.2)	0.54(13.7)	0.50(12.7)	0.44(11.1)	0.12(3.0)	0.38(9.7)	0.41(10.3)
1/4	1/8	-CW-FL4-PB2	1.29(32.8)	0.60(15.2)	0.56(14.3)	0.50(12.7)	0.19(4.8)	0.38(9.7)	0.41(10.3)
1/4	1/4	-CW-FL4-PB4	1.49(37.8)	0.60(15.2)	0.56(14.3)	0.56(14.3)	0.19(4.8)	0.56(14.2)	0.54(13.7)
5/16	1/8	-CW-FL5-PB2	1.34(34.0)	0.64(16.3)	0.63(15.9)	0.56(14.3)	0.21(5.3)	0.38(9.7)	0.41(10.3)
5/16	1/4	-CW-FL5-PB4	1.52(38.6)	0.64(16.3)	0.63(15.9)	0.56(14.3)	0.25(6.4)	0.56(14.2)	0.54(13.7)
3/8	1/4	-CW-FL6-PB4	1.57(39.9)	0.66(16.8)	0.69(17.5)	0.63(15.9)	0.28(7.1)	0.56(14.2)	0.54(13.7)
3/8	3/8	-CW-FL6-PB6	1.57(39.9)	0.66(16.8)	0.69(17.5)	0.69(17.5)	0.28(7.1)	0.56(14.2)	0.67(17.1)
3/8	1/2	-CW-FL6-PB8	1.82(46.2)	0.66(16.8)	0.69(17.5)	0.87(22.2)	0.28(7.1)	0.75(19.1)	0.84(21.3)
3/8	3/4	-CW-FL6-PB12	1.88(47.8)	0.66(16.8)	0.69(17.5)	1.06(27.0)	0.28(7.1)	0.75(19.1)	1.05(26.7)
1/2	3/8	-CW-FL8-PB6	1.71(43.4)	0.90(22.9)	0.87(22.2)	0.81(20.6)	0.41(10.4)	0.56(14.2)	0.67(17.1)
1/2	1/2	-CW-FL8-PB8	1.93(49.0)	0.90(22.9)	0.87(22.2)	0.87(22.2)	0.41(10.4)	0.75(19.1)	0.84(21.3)
1/2	3/4	-CW-FL8-PB12	1.99(50.5)	0.90(22.9)	0.87(22.2)	1.06(27.0)	0.41(10.4)	0.75(19.1)	1.05(26.7)
5/8	1/2	-CW-FL10-PB8	1.93(49.0)	0.96(24.4)	1.00(25.4)	0.94(23.8)	0.50(12.7)	0.75(19.1)	0.84(21.3)
3/4	1/2	-CW-FL12-PB8	1.99(50.5)	0.96(24.4)	1.13(28.6)	1.06(27.0)	0.55(14.0)	0.75(19.1)	0.84(21.3)
3/4	3/4	-CW-FL12-PB12	1.99(50.5)	0.96(24.4)	1.13(28.6)	1.06(27.0)	0.62(15.7)	0.75(19.1)	1.05(26.7)
1	1	-CW-FL16-PB16	2.45(62.2)	1.23(31.2)	1.50(38.1)	1.37(34.9)	0.88(22.4)	0.94(23.9)	1.31(33.4)
1 1/4	1 1/4	-CW-FL20-PB20	3.04(77.2)	1.62(41.1)	1.87(47.6)	1.75(44.5)	1.09(27.7)	0.94(23.9)	1.66(42.2)
1 1/2	1 1/2	-CW-FL24-PB24	3.50(88.9)	1.97(50.0)	2.25(57.2)	2.13(54.0)	1.34(34.0)	1.03(26.2)	1.90(48.3)

Note: The nominal wall thickness of pipe welding ends is SCH80.

Weld Connectors

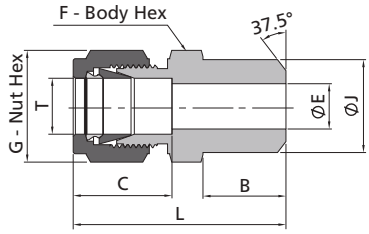

The E dimension refers to the smallest nominal orifice. It might be larger at welding end.

Metric Tube — **Pipe Butt Weld**

T-Tube O.D. (mm)	Pipe Weld Size	Basic Ordering Number	Dimensions, mm (in.)						
			L	C	G	F	E	B	J
3	1/8	-CW-ML3-PB2	30.5(1.20)	12.9(0.51)	12.0(0.47)	12.0(0.47)	2.4(0.09)	9.7(0.38)	10.3(0.41)
4	1/8	-CW-ML4-PB2	31.5(1.24)	13.7(0.54)	12.0(0.47)	12.0(0.47)	2.4(0.09)	9.7(0.38)	10.3(0.41)
6	1/8	-CW-ML6-PB2	32.8(1.29)	15.3(0.60)	14.0(0.55)	14.0(0.55)	4.8(0.19)	9.7(0.38)	10.3(0.41)
6	1/4	-CW-ML6-PB4	37.9(1.49)	15.3(0.60)	14.0(0.55)	14.0(0.55)	4.8(0.19)	14.2(0.56)	13.7(0.54)
8	1/8	-CW-ML8-PB2	34.2(1.35)	16.2(0.64)	16.0(0.63)	15.0(0.59)	5.4(0.21)	9.7(0.38)	10.3(0.41)
8	1/4	-CW-ML8-PB4	38.7(1.52)	16.2(0.64)	16.0(0.63)	15.0(0.59)	6.4(0.25)	14.2(0.56)	13.7(0.54)
8	1/2	-CW-ML8-PB8	45.6(1.80)	16.2(0.64)	16.0(0.63)	22.0(0.87)	6.4(0.25)	19.1(0.75)	21.3(0.84)
10	1/4	-CW-ML10-PB4	40.9(1.60)	17.2(0.70)	19.0(0.75)	18.0(0.71)	7.5(0.30)	14.2(0.56)	13.7(0.54)
10	3/8	-CW-ML10-PB6	40.9(1.60)	17.2(0.70)	19.0(0.75)	18.0(0.71)	7.9(0.31)	14.2(0.56)	17.1(0.67)
10	1/2	-CW-ML10-PB8	46.5(1.80)	17.2(0.70)	19.0(0.75)	22.0(0.87)	7.9(0.31)	19.1(0.75)	21.3(0.84)
12	1/4	-CW-ML12-PB4	43.4(1.70)	22.8(0.90)	22.0(0.87)	22.0(0.87)	7.5(0.30)	14.2(0.56)	13.7(0.54)
12	3/8	-CW-ML12-PB6	43.4(1.70)	22.8(0.90)	22.0(0.87)	22.0(0.87)	9.5(0.37)	14.2(0.56)	17.1(0.67)
12	1/2	-CW-ML12-PB8	49.0(1.90)	22.8(0.90)	22.0(0.87)	22.0(0.87)	9.5(0.37)	19.1(0.75)	21.3(0.84)
14	3/8	-CW-ML14-PB6	44.1(1.70)	24.4(0.96)	25.0(0.98)	24.0(0.94)	10.7(0.42)	14.2(0.56)	17.1(0.67)
15	1/2	-CW-ML15-PB8	49.0(1.90)	24.4(0.96)	25.0(0.98)	24.0(0.94)	11.9(0.47)	19.1(0.75)	21.3(0.84)
16	1/2	-CW-ML16-PB8	49.0(1.90)	24.4(0.96)	25.0(0.98)	24.0(0.94)	12.7(0.50)	19.1(0.75)	21.3(0.84)
18	1/2	-CW-ML18-PB8	50.5(2.00)	24.4(0.96)	30.0(1.18)	27.0(1.06)	13.9(0.55)	19.1(0.75)	21.3(0.84)
30	1 1/4	-CW-ML30-PB20	77.2(3.00)	39.6(1.60)	50.0(1.97)	46.0(1.81)	26.2(1.03)	23.9(0.94)	42.2(1.66)
32	1 1/4	-CW-ML32-PB20	79.6(3.10)	42.0(1.70)	50.0(1.97)	46.0(1.81)	28.6(1.13)	23.9(0.94)	42.2(1.66)
38	1 1/2	-CW-ML38-PB24	91.6(3.60)	49.4(1.90)	60.0(2.36)	55.0(2.17)	33.7(1.33)	26.2(1.03)	48.3(1.9)

Note: The nominal wall thickness of pipe welding ends is SCH80.

Weld Elbows

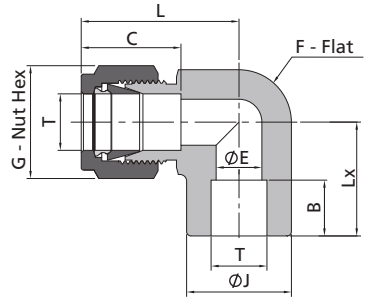

Fractional Tube — **Tube Socket Weld**

T-Tube O.D. (in.)	Basic Ordering Number	Dimensions, in. (mm)							
		L	C	G	F	B	E	Lx	J
1/8	-LW-FL2-TS2	0.66(16.8)	0.50(12.7)	0.44(11.1)	0.37(9.5)	0.10(2.5)	0.09(2.3)	0.63(16.0)	0.43(11.0)
3/16	-LW-FL3-TS3	0.72(18.3)	0.54(13.7)	0.50(12.7)	0.44(11.1)	0.19(4.8)	0.13(3.3)	0.69(17.5)	0.58(14.7)
1/4	-LW-FL4-TS4	1.06(26.9)	0.60(15.2)	0.56(14.3)	0.50(12.7)	0.28(7.1)	0.19(4.8)	0.77(19.6)	0.58(14.7)
3/8	-LW-FL6-TS6	1.20(30.5)	0.66(16.8)	0.69(17.5)	0.63(15.9)	0.31(7.9)	0.28(7.1)	0.91(23.1)	0.72(18.3)
1/2	-LW-FL8-TS8	1.42(36.1)	0.90(22.9)	0.87(22.2)	0.81(20.6)	0.38(9.7)	0.41(10.4)	1.02(25.9)	0.94(23.8)
5/8	-LW-FL10-TS10	1.16(29.5)	0.96(24.4)	1.00(25.4)	1.06(27.0)	0.41(10.4)	0.50(12.7)	1.16(29.5)	1.08(27.5)
3/4	-LW-FL12-TS12	1.57(39.9)	0.96(24.4)	1.13(28.6)	1.06(27.0)	0.44(11.2)	0.62(15.7)	1.17(29.7)	1.23(31.2)
1	-LW-FL16-TS16	1.93(49.0)	1.23(31.2)	1.50(38.1)	1.37(34.9)	0.62(15.7)	0.88(22.4)	1.45(36.8)	1.59(40.3)

Weld Elbows

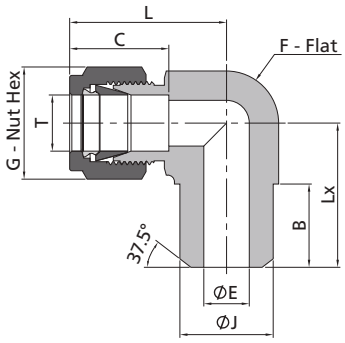

The E dimension refers to the smallest nominal orifice. It might be larger at welding end.

Fractional Tube										Pipe Butt Weld
T-Tube O.D. (in.)	Pipe Weld Size	Basic Ordering Number	Dimensions, in. (mm)							
			L	C	G	F	B	E	Lx	J
1/8	1/8	-LW-FL2-PB2	0.92(23.4)	0.50(12.7)	0.44(11.1)	0.44(11.1)	0.38(9.7)	0.09(2.3)	0.72(18.3)	0.41(10.3)
3/16	1/8	-LW-FL3-PB2	1.01(25.7)	0.54(13.7)	0.50(12.7)	0.50(12.7)	0.38(9.7)	0.12(3.0)	0.74(18.8)	0.41(10.3)
1/4	1/8	-LW-FL4-PB2	1.06(26.9)	0.60(15.2)	0.56(14.3)	0.50(12.7)	0.38(9.7)	0.19(4.8)	0.74(18.8)	0.41(10.3)
1/4	1/4	-LW-FL4-PB4	1.06(26.9)	0.60(15.2)	0.56(14.3)	0.50(12.7)	0.56(14.2)	0.19(4.8)	0.92(23.4)	0.54(13.7)
3/8	1/4	-LW-FL6-PB4	1.20(30.5)	0.66(16.8)	0.69(17.5)	0.63(15.9)	0.56(14.2)	0.28(7.1)	1.00(25.4)	0.54(13.7)
1/2	3/8	-LW-FL8-PB6	1.37(34.8)	0.90(22.9)	0.87(22.2)	0.81(20.6)	0.56(14.2)	0.41(10.4)	1.13(28.8)	0.67(17.1)
1/2	1/2	-LW-FL8-PB8	1.42(36.1)	0.90(22.9)	0.87(22.2)	0.81(20.6)	0.75(19.1)	0.41(10.4)	1.30(33.0)	0.84(21.3)
5/8	1/2	-LW-FL10-PB8	1.43(36.3)	0.96(24.4)	1.00(25.4)	0.94(23.8)	0.75(19.1)	0.50(12.7)	1.38(35.1)	0.84(21.3)
3/4	3/4	-LW-FL12-PB12	1.57(39.9)	0.96(24.4)	1.13(28.6)	1.06(27.0)	0.75(19.1)	0.62(15.7)	1.45(36.8)	1.05(26.7)
1	3/4	-LW-FL16-PB12	1.94(49.3)	1.23(31.2)	1.50(38.1)	1.37(34.9)	0.75(19.1)	0.74(18.8)	1.65(41.9)	1.05(26.7)
1	1	-LW-FL16-PB16	1.94(49.3)	1.23(31.2)	1.50(38.1)	1.37(34.9)	0.94(23.9)	0.88(22.4)	1.84(46.7)	1.31(33.4)

Note: The nominal wall thickness of pipe welding ends is SCH80.

Calibration Fittings

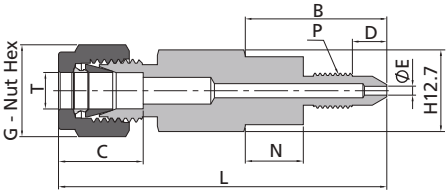

◎ The calibration fittings can be connected directly with the bleed port of the transmitter so that the calibration process can be simplified.

◎ Two types are available to fit the bleed ports of the transmitters.

T-Tube O.D. (in.)	P-SAE/MS Thread Size	Basic Ordering Number	Dimensions, in. (mm)						
			L	B	C	D	E	G	N
1/4	1/4-28	-FC-FL4-1428	1.69(42.9)	0.78(19.8)	0.60(15.2)	0.43(10.9)	0.06(1.5)	0.56(14.3)	——
1/4	5/16-24	-FC-FL4-51624	2.32(58.9)	1.41(35.8)	0.60(15.2)	0.40(10.2)	0.06(1.5)	0.56(14.3)	0.41(10.4)

Dielectric Fittings

Materials

Component	Material
Insulator	Polyamide-imide
O-Ring	70 Durometer FKM
Backup Ring	Virgin PTFE

Technical Data

- Electrical Resistance of Insulators at 70°F (20°C): $10\times10^{6}\Omega$ at 10 V
- Maximum working pressure: 5000 psig (344 bar) at 70°F (21°C)
- Temperature range: -4°F (-20°C) to 200°F (93°C)

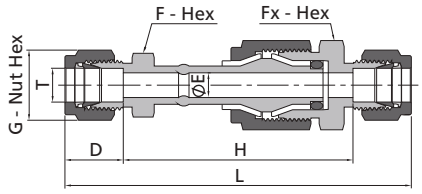

Fractional Tube

T-Tube O.D. (in.)	Basic Ordering Number	Dimensions, in. (mm)						
		L	D	G	H	E	F	Fx
1/4	-DF-FL4	3.77(95.7)	0.60(15.2)	0.56(14.3)	2.57(65.3)	0.19(4.8)	0.50(12.7)	0.81(20.6)
3/8	-DF-FL6	3.92(99.6)	0.66(16.8)	0.69(17.5)	2.59(65.8)	0.28(7.1)	0.63(15.9)	0.81(20.6)
1/2	-DF-FL8	4.17(106.0)	0.90(22.9)	0.87(22.2)	2.37(60.2)	0.28(7.1)	0.81(20.6)	0.81(20.6)

Metric Tube

T-Tube O.D. (mm)	Basic Ordering Number	Dimensions, mm (in.)						
		L	D	G	H	E	F	Fx
12	-DF-ML12	107.0(4.21)	22.8(0.90)	22.0(0.87)	61.7(2.43)	7.1(0.28)	22.0(0.87)	22.0(0.87)

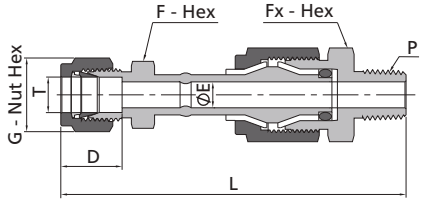

The E dimension refers to the smallest nominal orifice. It might be larger at tapered thread end, straight thread end.

Fractional Tube — **NPT Thread**

T-Tube O.D. (in.)	P-NPT Size	Basic Ordering Number	Dimensions, in. (mm)					
			L	D	G	E	F	Fx
3/8	1/4	-DF-FL6-NS4	3.73(94.7)	0.66(16.8)	0.69(17.5)	0.28(7.1)	0.63(15.9)	0.87(22.2)

Visual Tube Fittings

Materials

Component	Material
Body	CF8M/A351
Visual Tube	Borosilicate Glass
Seal	PTFE/D1710

Features

- Visual tube allows for quick and easy monitoring of medium flow in pipeline systems
- Full bore structure gives no pressure loss

Technical Data

- Max. Working Pressure: 551 psig (38 bar) @ 150°F (66°C)
  348 psig (24 bar) @ 392°F(200°C)
- Temperature range: -40°F (-40°C) to 392°F (200°C)

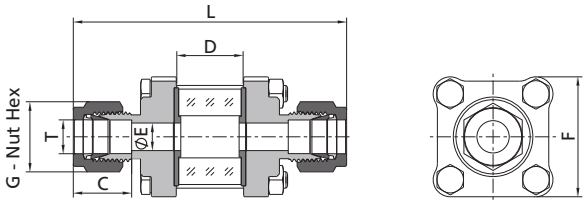

Fractional Tube

T-Tube O.D. (in.)	Basic Ordering Number	Dimensions, in. (mm)					
		L	C	G	E	D	F
1/4	-SGF-FL4	3.18(80.8)	0.60(15.2)	0.56(14.3)	0.19(4.8)	0.61(15.4)	1.34(37.0)
3/8	-SGF-FL6	3.18(80.8)	0.66(16.8)	0.69(17.5)	0.28(7.1)	0.61(15.4)	1.34(37.0)
1/2	-SGF-FL8	4.09(103.8)	0.90(22.9)	0.87(22.2)	0.41(10.4)	0.98(25.0)	1.79(45.4)
3/4	-SGF-FL12	4.09(103.8)	0.96(24.4)	1.13(28.6)	0.62(15.7)	0.98(25.0)	1.79(45.4)
1	-SGF-FL16	5.38(136.7)	1.23(31.2)	1.50(38.1)	0.88(22.4)	1.28(32.5)	2.44(62.0)

Metric Tube

T-Tube O.D. (mm)	Basic Ordering Number	Dimensions, mm (in.)					
		L	C	G	E	D	F
6	-SGF-ML6	80.8(3.18)	15.3(0.60)	14.0(0.55)	4.8(0.19)	15.4(0.61)	37.0(1.34)
8	-SGF-ML8	80.8(3.18)	16.2(0.64)	16.0(0.63)	6.4(0.25)	15.4(0.61)	37.0(1.34)
10	-SGF-ML10	80.8(3.18)	17.2(0.68)	19.0(0.75)	7.9(0.31)	15.4(0.61)	37.0(1.34)
12	-SGF-ML12	103.8(4.09)	22.8(0.90)	22.0(0.87)	10.4(0.41)	25.0(0.98)	45.4(1.79)
16	-SGF-ML16	103.8(4.09)	24.4(0.96)	25.0(0.98)	12.7(0.50)	25.0(0.98)	45.4(1.79)
25	-SGF-ML25	136.7(5.38)	31.3(1.23)	38.0(1.50)	21.8(0.86)	32.5(1.28)	62.0(2.44)

Note: For other dimensions and types available, please contact FITOK or our authorized distributors.

RS, RSD Gaskets

RS

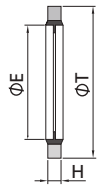

RSD

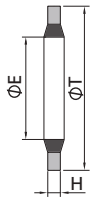

The RS and RSD gaskets provide a seal with male ISO parallel threads. The gasket consists of a fluorocarbon FKM or Buna inner ring bonded to a carbon steel or stainless steel outer ring.

ISO Parallel Thread Size	Basic Ordering Number	Dimensions, in. (mm)		
		T	E	H
1/8	-RS-2	0.63(16.0)	0.41(10.4)	0.08(2.0)
1/4	-RS-4	0.81(20.6)	0.54(13.7)	
3/8	-RS-6	0.94(23.9)	0.68(17.3)	
1/2	-RS-8	1.13(28.7)	0.85(21.6)	0.10(2.5)
3/4	-RS-12	1.38(35.1)	1.06(26.9)	
1	-RS-16	1.69(42.9)	1.33(33.8)	
1/8	-RSD-2	0.58(14.7)	0.41(10.4)	0.05(1.25)
1/4	-RSD-4	0.74(18.7)	0.55(13.9)	
3/8	-RSD-6	0.89(22.7)	0.69(17.4)	
1/2	-RSD-8	1.05(26.7)	0.85(21.7)	
3/4	-RSD-12	1.28(32.5)	1.07(27.3)	
1	-RSD-16	1.56(39.5)	1.35(34.2)	0.08(2.0)

RS-M Gaskets

Metric Thread Size	Basic Ordering Number	Dimensions, mm (in.)		
		T	E	H
M8 x 1	-RS-M8	13.0(0.51)	8.7(0.34)	1.0(0.04)
M10 x 1	-RS-M10	16.0(0.63)	10.7(0.42)	1.5(0.06)
M12 x 1.5	-RS-M12	18.0(0.63)	12.7(0.42)	
M14 x 1.5	-RS-M14	22.0(0.71)	14.7(0.50)	
M16 x 1.5	-RS-M16	24.0(0.87)	16.7(0.66)	
M18 x 1.5	-RS-M18	26.0(0.94)	18.7(0.74)	
M20 x 1.5	-RS-M20	28.0(1.02)	20.7(0.81)	
M22 x 1.5	-RS-M22	30.0(1.10)	22.7(0.89)	2.0(0.08)
M24 x 1.5	-RS-M24	32.0(1.20)	24.7(1.00)	
M27 x 2	-RS-M27	36.0(1.30)	27.2(1.10)	
M30 x 2	-RS-M30	39.0(1.40)	30.7(1.20)	
M33 x 2	-RS-M33	42.0(1.50)	33.7(1.30)	
M36 x 2	-RS-M36	48.0(1.70)	37.0(1.50)	2.5(0.10)
M39 x 2	-RS-M39	51.0(1.90)	40.0(1.60)	
M42 x 2	-RS-M42	53.0(2.00)	42.7(1.70)	
M45 x 2	-RS-M45	57.0(2.10)	46.0(1.80)	3.0(0.12)
M48 x 2	-RS-M48	59.0(2.20)	48.7(1.90)	

Ordering Information

Add the material designator as a prefix to the basic ordering number to complete the ordering number.

Ring		Designator
Outer	Inner	
Stainless Steel	FKM	SSF
Carbon Steel	FKM	CSF
	Buna-N	CSB

Example:

1. A RS gasket with a Buna inner ring bonded to carbon steel outer ring provides a seal with 1/8 male ISO parallel thread, the complete ordering number is CSB-RS-2.
2. A RSD gasket with an FKM inner ring bonded to stainless steelouter ring provides a seal with 1/4 male ISO parallel thread, the complete ordering number is SSF-RSD-4.

The RS and RSD gaskets can be used with RS fitting only.

RP Gaskets

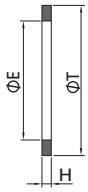

The RP gasket provides a seal with male ISO parallel threads. The RP gasket may be used with a RS fitting.

ISO Parallel Thread Size	Basic Ordering Number	Dimensions, in. (mm)		
		T	E	H
1/8	-RP-2	0.59(15.0)	0.39(9.9)	0.04(1.0)
1/4	-RP-4	0.75(19.1)	0.52(13.2)	0.06(1.5)
3/8	-RP-6	0.91(23.1)	0.66(16.8)	
1/2	-RP-8	1.06(26.9)	0.83(21.1)	
3/4	-RP-12	1.30(33.0)	1.05(26.7)	0.08(2.0)
1	-RP-16	1.58(40.1)	1.31(33.2)	

RP-M Gaskets

Metric Thread Size	Basic Ordering Number	Dimensions, mm (in.)		
		T	E	H
M8 x 1	-RP-M8	13.2(0.52)	8.2(0.32)	1.5(0.06)
M10 x 1	-RP-M10	15.2(0.60)	10.2(0.40)	
M12 x 1.5	-RP-M12	18.2(0.72)	12.2(0.48)	2.0(0.08)
M14 x 1.5	-RP-M14	20.2(0.80)	14.2(0.56)	
M16 x 1.5	-RP-M16	22.2(0.87)	16.2(0.64)	
M18 x 1.5	-RP-M18	24.2(0.95)	18.2(0.72)	
M20 x 1.5	-RP-M20	26.2(1.03)	20.2(0.80)	
M22 x 1.5	-RP-M22	28.2(1.11)	22.2(0.87)	
M24 x 1.5	-RP-M24	30.2(1.19)	24.2(0.95)	
M27 x 2	-RP-M27	33.3(1.31)	27.2(1.07)	2.5(0.10)
M30 x 2	-RP-M30	37.3(1.47)	30.2(1.19)	
M33 x 2	-RP-M33	40.3(1.59)	33.2(1.31)	
M36 x 2	-RP-M36	43.3(1.70)	36.2(1.43)	
M39 x 2	-RP-M39	47.3(1.86)	39.2(1.54)	
M42 x 2	-RP-M42	50.3(1.98)	42.2(1.66)	
M45 x 2	-RP-M45	53.3(2.10)	45.2(1.78)	
M48 x 2	-RP-M48	56.3(2.22)	48.2(1.90)	

RG Gaskets

The RG gasket provides a seal on pressure gauges equipped with male ISO parallel threads.

ISO Parallel Thread Size	Basic Ordering Number	Dimensions, in. (mm)		
		T	E	H
1/4	-RG-4	0.42(10.7)	0.30(7.6)	0.07(1.8)
3/8	-RG-6	0.56(14.2)	0.34(8.6)	0.09(2.3)
1/2	-RG-8	0.70(17.8)	0.36(9.1)	0.10(2.5)

RG-M Gaskets

ISO Parallel Thread Size	Basic Ordering Number	Dimensions, mm (in.)		
		T	E	H
M10 x 1	-RG-M10	8.3(0.33)	3.3(0.13)	1.5(0.06)
M12 x 1.5	-RG-M12	9.7(0.38)	5.4(0.21)	2.0(0.08)
M14 x 1.5	-RG-M14	11.7(0.38)	6.4(0.21)	
M16 x 1.5	-RG-M16	13.7(0.46)	8.4(0.25)	
M18 x 1.5	-RG-M18	15.7(0.54)	10.0(0.39)	
M20 x 1.5	-RG-M20	17.6(0.62)	11.4(0.45)	
M22 x 1.5	-RG-M22	19.6(0.69)	13.4(0.53)	
M24 x 1.5	-RG-M24	21.6(0.77)	14.8(0.58)	
M27 x 2	-RG-M27	24.0(0.90)	13.9(0.50)	2.5(0.10)
M30 x 2	-RG-M30	27.0(0.90)	19.5(0.80)	
M33 x 2	-RG-M33	30.0(1.10)	21.5(0.80)	
M36 x 2	-RG-M36	33.0(1.20)	23.5(0.90)	
M39 x 2	-RG-M39	36.0(1.30)	24.5(1.00)	
M42 x 2	-RG-M42	38.9(1.40)	29.5(1.20)	
M45 x 2	-RG-M45	41.9(1.50)	30.0(1.20)	
M48 x 2	-RG-M48	44.9(1.60)	32.5(1.30)	

RJ Gaskets

The RJ gasket provides a seal on Japanese pressure gauges equipped with male ISO parallel threads.

ISO Parallel Thread Size	Basic Ordering Number	Dimensions, in. (mm)		
		T	E	H
1/4	-RJ-4	0.43(10.9)	0.22(5.6)	0.04(1.0)
3/8	-RJ-6	0.55(13.9)	0.22(5.6)	0.04(1.0)
1/2	-RJ-8	0.70(17.8)	0.22(5.6)	0.04(1.0)

Ordering Information

Add the material designator as a prefix to the basic ordering number to complete the ordering number.

Material	Designator
Copper	CU
316L SS	6L
Vulcanized Fibre	QB
PTFE	T

Vulcanized Fibre and PTFE cannot be used for RP gasket.

Example:
CU-RP-2, 6L-RG-6, QB-RG-M20, T-RJ-8.

O-rings



O-rings for Fittings with SAE/MS Straight Threads

SAE/MS Thread Size	Ordering Number	Material
5/16-24	VI9-902	90 Durometer Fluorocarbon FKM
3/8-24	VI9-903	
7/16-20	VI9-904	
1/2-20	VI9-905	
9/16-18	VI9-906	
3/4-16	VI9-908	
7/8-14	VI9-910	
1 1/16-12	VI9-912	
1 3/16-12	VI9-914	
1 5/16-12	VI9-916	
1 5/8-12	VI9-920	
1 7/8-12	VI9-924	

O-rings for Fittings with O-Seal Pipe Threads

NPT/ISO Thread Size	Ordering Number	Material
1/8	BN7-013	70 Durometer NBR
1/4	BN7-113	
3/8	BN7-116	
1/2	BN7-118	

O-rings for Positionable Fittings with ISO Parallel Threads

ISO Parallel Thread Size	Ordering Number	Material
1/8	VI9-502	90 Durometer Fluorocarbon FKM
1/4	VI9-111	
3/8	VI9-113	
1/2	VI9-508	
3/4	VI9-119	
1	VI9-217	

O-rings for Fittings with O-Seal Straight Threads

SAE/MS Thread Size	Ordering Number	Material
5/16-24	BN7-011	70 Durometer NBR
3/8-24	BN7-012	
7/16-20	BN7-013	
1/2-20	BN7-112	
9/16-18	BN7-113	
3/4-16	BN7-116	
1 1/16-12	BN7-121	
1 5/16-12	BN7-125	

O-rings for Fittings with Metric Threads

SAE/MS Thread Size	Ordering Number	Material
M14×1.5	BN9-M14	90 Durometer NBR
M20×1.5	BN9-M20	

PTFE Tape Pipe Thread Sealant

Features



- A-A-58092 compliant material
- Temperatures up to 450°F (232°C)

Ordering Information

Tapered Thread Size	Tape Size	Ordering Number
1/8", 1/4" and 3/8"	7×10000 mm	PTS-4
1/2" and up	12×10000 mm	PTS-8

Notes: Tape should be used only on tapered pipe threads. Do not use on flared, coned, or tube fitting ends.

Ordering Number Description

SS - CM - ML12 - NS8 - □ - □ - □□

Material	Fitting Type	P1 Type	P1 Size	P2 Type	P2 Size	P3 and P4	Special Application	Cleaning and Packaging

Material	
SS	316 SS
S4	304 SS
S1	321 SS
S12	6Mo (S31254)
904L	904L SS
TI	Titanium
D5	Duplex 2205
D7	Super duplex 2507
A20	Alloy 20
M	Alloy 400
INC	Alloy 600
A65	Alloy 625
HC	Alloy C-276
CS	Carbon Steel
B	Brass
PA	Nylon
T	PTFE

Fitting Type	
CM	Male Connector
BCM	Bulkhead Male Connector
TCM	Thermocouple Connector
CF	Female Connector
BCF	Bulkhead Female Connector
U	Union
BU	Bulkhead Union
LM	Male Elbow
VM	45° Male Elbow
VP	45° Positionable Male Elbow
LP	Positionable Male Elbow
LF	Female Elbow
LU	Union Elbow
TMT	Male Run Tee
TTM	Male Branch Tee
TPT	Positionable Male Run Tee
TTP	Positionable Male Branch Tee
TFT	Female Run Tee
TTF	Female Branch Tee
TTT	Union Tee
TRR	Reducer Tees
TTR	Reducer Branch Tees
TRT	Reducer Run Tees
RRT	Reducer Double Run Tees
C	Union Cross
TC	Cap
TP	Plug
R	Reducer
P	Port Connector
AM	Male Adapter
AF	Female Adapter
CW	Weld Connector
LW	Weld Elbow
DF	Dielectric Fitting

P1 Type	
ML	Metric Ferrule
FL	Fractional Ferrule
MT	Metric Tube (≤∅25 mm)
AMT	Metric Tube (>∅25 mm)
FT	Fractional Tube(≤∅1")
AFT	Fractional Tube (>∅1")

P1 Size	
1	1/16"
2	1/8" or 2 mm
3	3/16" or 3 mm
4	1/4" or 4 mm
5	5/16"
6	3/8" or 6 mm
8	1/2" or 8 mm
10	5/8" or 10 mm
12	3/4" or 12 mm
14	7/8" or 14 mm
15	15 mm
16	1" or 16 mm
18	1 1/8" or 18 mm
20	1 1/4" or 20 mm
22	22 mm
24	1 1/2" or 24 mm
25	25 mm
28	28 mm
30	30 mm
32	2" or 32 mm
38	38 mm
50	50 mm

Except the same as P1, the other type follows:

P2 Type	
NS	NPT Thread
ONS	O-ring with NPT Thread
RT	ISO Tapered Thread
RS	ISO Parallel Thread (For RS Gasket)
RP	ISO Parallel Thread (For RP Gasket)
RG	Female ISO Parallel Thread (For RG Gasket)
RJ	ISO Parallel Thread (For RJ Gasket)
BP	Male ISO Parallel Thread (For RG Gasket)
PP	Positionable, ISO Straight Thread
ST	SAE/MS Straight Thread (Light Duty)
SH	SAE/MS Straight Thread (Heavy Duty)
OST	O-ring with SAE/MS Straight Thread
AN	37° Flare
MS	Metric Thread (For RG-M Gasket)
MRS	Metric Thread (For RS-M Gasket)
MST	O-ring with Metric Thread
TS	Fractional Tube Socket Weld
PB	Pipe Butt Weld

Except the same as P1, the other size follows:

P2 Size	
5	M5 × 0.8 or 5/16-24 or 5/16"
6	M6 × 1 or 3/8-24 or 3/8" or 3/8×SCH80 or G3/8
7	7/16 -20
8	M8 × 1 or 1/2-20 or 1/2" or 1/2×SCH80 or G1/2
9	9/16 -18
10	M10 × 1 or 5/8"
12	M12 × 1.5 or 3/4-16 or 3/4" or 3/4×SCH80 or G3/4
14	M14 × 1.4 or 7/8-14
16	M16 × 1.5 or 1" or 1×SCH80 or G1
17	1 1/16-12
18	M18 × 1.5
19	1 5/16 -12
20	M20 × 1.5 or 1 1/4" or 1 1/4×SCH80 or G1 1/4
21	1 5/16 -12
22	M22 × 1.5
24	M24 × 1.5 or 1 1/2" or 1 1/2×SCH80 or G1 1/2
26	1 5/8 -12
27	M27 × 2
30	1 7/8 -12

Specified in the same way as P2

Special Application	
	None
SI	SilcoNert® 2000 (Sulfinert®) Coating
ES	Customized for Europe

Cleaning and Packaging	
	FC-01
F2	FC-02

Note: "Ordering Number Description" is a reference to understand the combination rules of FITOK product part number. Not all combinations are available.

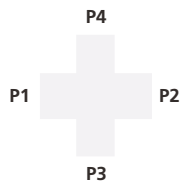

P1, P2, P3 and P4 shall be described in the following orders:

◎ Ferrule - Tube - NPT Thread - ISO Tapered Thread - ISO Parallel Thread - SAE/MS Straight Thread - 37° Flare - Pipe Butt Weld - Fractional Tube Socket Weld - Others

◎ Describe in descending order as per size if the end connection types are the same

◎ Describe the end of P1 if all end connections are the same

Cleaning and Packaging:

FC-01: Standard cleaning and packaging for general industrial procedures

FC-02: Special cleaning and packaging for wetted system components to ensure compliance with product cleanliness requirement as stated in ASTM G93 Level C

Special Application:

Wetted metal components SilcoNert® 2000 (Sulfinert®) coated.

37° Flared Tube Fittings



Contents

Tube Cap Assembly - TCA  A-98

Nuts - N  A-98

Male Connectors - CM 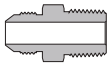 A-98

Rotatable Male Connectors - CM 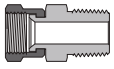 A-99

Female Connectors - CF  A-100

Rotatable Female Connectors - CF  A-100

Unions - U  A-101

Large Hex Unions - HUN 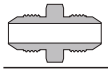 A-101

Reducing Adapters - RA  A-101

Sleeves - SL  A-101

Bulkhead Unions - BU 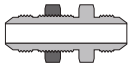 A-102

Bulkhead Lock Nuts - BN  A-102

Tube Caps - TC  A-102

Tube Plugs - TP  A-102

Male Elbows - LM  A-103

Positionable Male Elbows - LP  A-103

45° Male Elbows - VM  A-104

Female Elbows - LF  A-104

Union Elbows - LU  A-105

Rotatable Union Elbows - LU  A-105

Male Branch Tees - TTM  A-106

Positionable Male Branch Tees - TTP  A-106

Male Run Tees - TMT  A-107

Female Branch Tees - TTF  A-107

Female Run Tees - TFT  A-108

Union Tees - TTT  A-108

Rotatable Run Tees - TTT 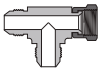 A-109

Rotatable Branch Tees - TTT  A-109

Union Crosses - C  A-109

Features

◎ Fittings are designed and manufactured in compliance with SAE J514
◎ The hardened threads with smooth surface finish avoid galling and help to extend the fitting service life
◎ Radius junction design for elbows provides smooth flow path
◎ Stainless steel nut threads are silver-plated to minimize the friction with the body threads
◎ Every fitting is marked with size, material and heat number
◎ Fittings are easy to disconnect and retighten
◎ All male threads are protected by plastic caps

Technical Data

◎ Size range from 1/8" to 2" and 3 mm to 50 mm.
◎ Thread Specification:

Thread Type	Reference Specification
NPT	ASME B1.20.1, SAE AS71051
Unified (SAE)	ASME B1.1, SAE J475

◎ The working temperature of FITOK 37° flare tube fittings is the same as that of FITOK 6D series tube fittings.
◎ Working Pressure:

Nom. SAE Dash Size	Nom. Tube O.D. Size (in.)	37° Flare St. Thread	SAE St. Thread Union and Bulkhead (psig/bar)
2	1/8	5/16-24	5000 (345)
3	3/16	3/8-24	5000 (345)
4	1/4	7/16-20	5000 (345)
5	5/16	1/2-20	5000 (345)
6	3/8	9/16-18	5000 (345)
8	1/2	3/4-16	4500 (310)
10	5/8	7/8-14	3500 (241)
12	3/4	1 1/16-12	3500 (241)
14	7/8	1 3/16-12	3000 (207)
16	1	1 5/16-12	3000 (207)
20	1 1/4	1 5/8-12	2500 (172)
24	1 1/2	1 7/8-12	2000 (138)
32	2	2 1/2-12	1500 (103)

1. Working pressures given are for fittings of stainless steel only. Contact FITOK Group or our authorized distributors for working pressure of other materials.
2. Four times safety factor applied for above working pressure.

Materials

Material	Bar Stock	Forging	Designator
316 Stainless Steel	ASTM A276 ASME SA479, EN 1.4401	ASTM A182, ASME SA182, EN 1.4401	SS
Aluminum	ASTM B211	ASTM B247	AL
Brass	ASTM B16/B453	ASTM B283	B
Carbon Steel	ASTM A108	ASTM A105	CS

Ordering Information

Add the material designator as a prefix to the basic ordering number to get the complete ordering number.

For example:

1. Male connector with 1/4" tube, 1/4 NPT thread and 316 stainless steel material, the complete ordering number is **SS-CM-AN4-NS4.**
2. Sleeve with 6 mm tube and 316 stainless steel material, the complete ordering number is **SS-SL-AN6M.**

Flaring Operation

Tube flaring is carried out in two different ways, single wall flare on thick wall tubes and double wall flare on thin wall tubes to reinforce same. Refer to the table below:

Thick Tubes

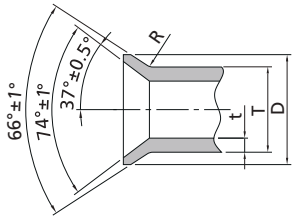

Thin Tubes

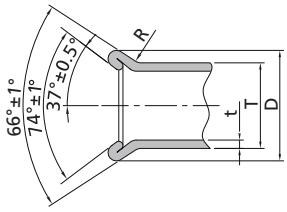

Fractional Tubing

T-Tube O.D. in	Dimensions		
	D (mm)	t (in.)	R (mm)
1/4	8.6-9.1	0.020-0.065	0.8
5/16	10.2-10.9	0.020-0.065	0.8
3/8	11.6-12.4	0.020-0.065	1.0
1/2	16.0-16.7	0.028-0.083	1.5
5/8	19.3-20.0	0.035-0.095	1.5
3/4	23.3-24.1	0.035-0.109	2.0
7/8	26.4-27.1	0.035-0.109	2.0
1	29.7-30.4	0.035-0.120	2.3
1 1/4	37.5-38.3	0.049-0.120	2.3
1 1/2	43.2-43.9	0.049-0.120	2.8
2	59.2-59.9	0.065-0.134	2.8

Metric Tubing

T-Tube O.D. (mm)	Dimensions		
	D (mm)	t (mm)	R (mm)
6	8.4-9.2	0.5-1.5	0.8
8	10.1-10.8	0.5-1.5	0.8
10	12.0-12.5	0.5-1.5	1.0
12	16.0-16.7	1.0-2.0	1.5
14	18.8-19.5	1.0-2.5	1.5
15	19.4-20.0	1.0-2.5	1.5
16	19.4-20.0	1.0-2.5	1.5
18	23.5-24.0	1.0-3.0	2.0
20	24.0-24.5	1.0-3.0	2.0
22	26.2-27.2	1.0-3.0	2.0
25	29.5-30.2	1.0-3.0	2.3
30	37.4-38.0	1.5-3.0	2.3
32	37.6-38.3	1.5-3.0	2.3
38	43.5-44.5	1.5-3.0	2.8
50	58.9-59.6	1.5-3.5	2.8

Installation Instructions

1. Cut the tube to the proper length.
2. Insert the tube into the nut and sleeve.
3. Form the flare to 37° dimension according to SAE J533. See flaring operation.
4. Finger-tighten the nut.
5. Tighten the nut 1/4 turn with wrench while holding steady the body of the fitting.

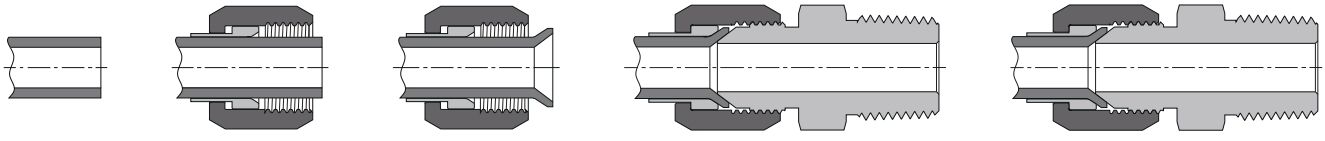

Step 1 Step 2 Step 3 Step 4 Step 5

Cautions:

◎ Do not loosen or tighten fittings when system is pressurized.
◎ Please use proper thread sealants on tapered pipe threads.

Dimensions

Tube cap assembly

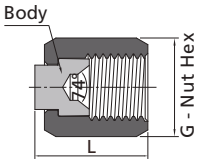

SAE 070112A

T-Tube O.D.		Basic Ordering Number	Dimensions, in. (mm)	
in.	mm		L	G
1/8	3	-TCA-AN2	0.60 (15.3)	0.37 (9.5)
3/16	4	-TCA-AN3	0.66 (16.8)	0.44 (11.1)
1/4	6	-TCA-AN4	0.67 (17.1)	0.56 (14.3)
5/16	8	-TCA-AN5	0.77 (19.5)	0.63 (15.9)
3/8	10	-TCA-AN6	0.81 (20.5)	0.69 (17.5)
1/2	12	-TCA-AN8	0.94 (23.9)	0.87 (22.2)
5/8	16	-TCA-AN10	1.07 (27.1)	1.00 (25.4)
3/4	18	-TCA-AN12	1.24 (31.6)	1.25 (31.8)
7/8	22	-TCA-AN14	1.26 (32.0)	1.37 (34.9)
1	25	-TCA-AN16	1.29 (32.8)	1.50 (38.1)
1 1/4	32	-TCA-AN20	1.39 (35.4)	2.00 (50.8)
1 1/2	38	-TCA-AN24	1.70 (43.2)	2.25 (57.2)
2	50	-TCA-AN32	2.07 (52.6)	2.87 (73.0)

Nuts

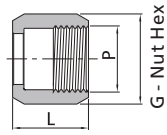

SAE 070110

Tube O.D.		P-SAE/MS Thread Size	Basic Ordering Number	Dimensions, in. (mm)	
in.	mm			L	G
1/8	3	5/16-24	-N-AN2	0.55 (14.0)	0.37 (9.5)
3/16	4	3/8-24	-N-AN3	0.61 (15.5)	0.44 (11.1)
1/4	6	7/16-20	-N-AN4	0.62 (15.8)	0.56 (14.3)
5/16	8	1/2-20	-N-AN5	0.68 (17.3)	0.63 (15.9)
3/8	10	9/16-18	-N-AN6	0.73 (18.5)	0.69 (17.5)
1/2	12	3/4-16	-N-AN8	0.85 (21.6)	0.87 (22.2)
5/8	16	7/8-14	-N-AN10	0.98 (24.9)	1.00 (25.4)
3/4	18	1 1/16-12	-N-AN12	1.03 (26.2)	1.25 (31.8)
7/8	22	1 3/16-12	-N-AN14	1.09 (27.7)	1.37 (34.9)
1	25	1 5/16-12	-N-AN16	1.13 (28.7)	1.50 (38.1)
1 1/4	32	1 5/8-12	-N-AN20	1.23 (31.2)	2.00 (50.8)
1 1/2	38	1 7/8-12	-N-AN24	1.42 (36.1)	2.25 (57.2)
2	50	2 1/2-12	-N-AN32	1.75 (44.5)	2.87 (73.0)

Male Connectors

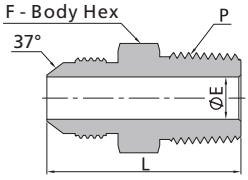

SAE 070102

Tube O.D.		P-NPT Size	Basic Ordering Number	Dimensions, in. (mm)		
in.	mm			L	E	F
1/8	3	1/8	-CM-AN2-NS2	1.11 (28.2)	0.06 (1.6)	0.44 (11.1)
3/16	4	1/8	-CM-AN3-NS2	1.14 (29.0)	0.13 (3.2)	0.44 (11.1)
1/4	6	1/8	-CM-AN4-NS2	1.22 (31.0)	0.17 (4.4)	0.50 (12.7)
1/4	6	1/4	-CM-AN4-NS4	1.42 (36.0)	0.17 (4.4)	0.56 (14.3)
1/4	6	1/2	-CM-AN4-NS8	1.68 (42.7)	0.17 (4.4)	0.87 (22.2)
5/16	8	1/8	-CM-AN5-NS2	1.22 (31.0)	0.19 (4.8)	0.56 (14.3)
5/16	8	1/4	-CM-AN5-NS4	1.42 (36.1)	0.24 (6.0)	0.56 (14.3)
3/8	10	1/8	-CM-AN6-NS2	1.25 (31.8)	0.19 (4.8)	0.63 (15.9)
3/8	10	1/4	-CM-AN6-NS4	1.43 (36.3)	0.28 (7.1)	0.63 (15.9)
3/8	10	3/8	-CM-AN6-NS6	1.43 (36.3)	0.30 (7.5)	0.75 (19.1)
3/8	10	1/2	-CM-AN6-NS8	1.67 (42.5)	0.30 (7.5)	0.87 (22.2)
1/2	12	1/4	-CM-AN8-NS4	1.53 (38.9)	0.28 (7.1)	0.81 (20.6)
1/2	12	3/8	-CM-AN8-NS6	1.53 (38.9)	0.39 (9.9)	0.81 (20.6)
1/2	12	1/2	-CM-AN8-NS8	1.79 (45.5)	0.39 (9.9)	0.87 (22.2)
1/2	12	3/4	-CM-AN8-NS12	1.85 (47.0)	0.39 (9.9)	1.13 (28.6)
5/8	16	3/8	-CM-AN10-NS6	1.70 (43.1)	0.38 (9.6)	0.94 (23.8)
5/8	16	1/2	-CM-AN10-NS8	1.89 (48.0)	0.48 (12.3)	0.94 (23.8)
5/8	16	3/4	-CM-AN10-NS12	1.95 (49.5)	0.48 (12.3)	1.13 (28.6)
3/4	18	3/4	-CM-AN12-NS12	2.06 (52.3)	0.61 (15.5)	1.13 (28.6)
3/4	18	1	-CM-AN12-NS16	2.25 (57.1)	0.61 (15.5)	1.37 (34.9)
7/8	22	3/4	-CM-AN14-NS12	2.09 (53.1)	0.62 (15.7)	1.25 (31.8)
1	25	3/4	-CM-AN16-NS12	2.11 (53.5)	0.62 (15.7)	1.37 (34.9)
1	25	1	-CM-AN16-NS16	2.30 (58.4)	0.85 (21.5)	1.37 (34.9)
1 1/4	32	1	-CM-AN20-NS16	2.42 (61.5)	0.88 (22.4)	1.69 (42.9)
1 1/4	32	1 1/4	-CM-AN20-NS20	2.45 (62.2)	1.08 (27.5)	1.69 (42.9)
1 1/2	38	1 1/4	-CM-AN24-NS20	2.68 (68.1)	1.13 (28.6)	2.00 (50.8)
1 1/2	38	1 1/2	-CM-AN24-NS24	2.68 (68.1)	1.30 (33.0)	2.00 (50.8)
2	50	2	-CM-AN32-NS32	3.11 (79.0)	1.77 (45.0)	2.63 (66.7)

Male Connectors

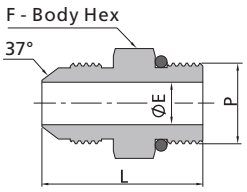

SAE 070120

Tube O.D.		P-SAE Nominal	P-SAE/MS Thread	Basic Ordering Number	Dimensions, in. (mm)		
in.	mm	Size	Specification		L	E	F
1/8	3	2	5/16-24	-CM-AN2-ST5	1.06 (26.9)	0.06 (1.6)	0.44 (11.1)
3/16	4	3	3/8-24	-CM-AN3-ST6	1.10 (27.9)	0.13 (3.2)	0.50 (12.7)
1/4	6	4	7/16-20	-CM-AN4-ST7	1.23 (31.2)	0.17 (4.4)	0.56 (14.3)
1/4	6	5	1/2-20	-CM-AN4-ST8	1.23 (31.2)	0.17 (4.4)	0.63 (15.9)
1/4	6	6	9/16-18	-CM-AN4-ST9	1.30 (33.0)	0.17 (4.4)	0.69 (17.5)
1/4	6	8	3/4-16	-CM-AN4-ST12	1.37 (34.8)	0.17 (4.4)	0.87 (22.2)
5/16	8	5	1/2-20	-CM-AN5-ST8	1.23 (31.2)	0.24 (6.0)	0.63 (15.9)
3/8	10	6	9/16-18	-CM-AN6-ST9	1.30 (33.0)	0.30 (7.5)	0.69 (17.5)
3/8	10	8	3/4-16	-CM-AN6-ST12	1.38 (35.1)	0.30 (7.5)	0.87 (22.2)
3/8	10	10	7/8-14	-CM-AN6-ST14	1.50 (38.1)	0.30 (7.5)	1.00 (25.4)
1/2	12	6	9/16-18	-CM-AN8-ST9	1.44 (36.6)	0.30 (7.5)	0.81 (20.6)
1/2	12	8	3/4-16	-CM-AN8-ST12	1.48 (37.6)	0.39 (9.9)	0.87 (22.2)
1/2	12	10	7/8-14	-CM-AN8-ST14	1.60 (40.6)	0.39 (9.9)	1.00 (25.4)
1/2	12	12	1 1/16-12	-CM-AN8-ST17	1.76 (44.7)	0.39 (9.9)	1.25 (31.8)
5/8	16	8	3/4-16	-CM-AN10-ST12	1.60 (40.6)	0.42 (10.7)	0.94 (23.8)
5/8	16	10	7/8-14	-CM-AN10-ST14	1.70 (43.2)	0.48 (12.3)	1.00 (25.4)
5/8	16	12	1 1/16-12	-CM-AN10-ST17	1.86 (47.2)	0.48 (12.3)	1.25 (31.8)
3/4	18	8	3/4-16	-CM-AN12-ST12	1.78 (45.2)	0.42 (10.7)	1.25 (31.7)
3/4	18	10	7/8-14	-CM-AN12-ST14	1.83 (46.4)	0.50 (12.7)	1.25 (31.7)
3/4	18	12	1 1/16-12	-CM-AN12-ST17	1.97 (50.0)	0.61 (15.5)	1.25 (31.8)
3/4	18	16	1 5/16-12	-CM-AN12-ST21	2.00 (50.8)	0.61 (15.5)	1.50 (38.1)
7/8	22	14	1 3/16-12	-CM-AN14-ST19	1.99 (50.5)	0.72 (18.3)	1.37 (34.9)
7/8	22	16	1 5/16-12	-CM-AN14-ST21	2.02 (51.3)	0.72 (18.3)	1.50 (38.1)
1	25	12	1 1/16-12	-CM-AN16-ST17	2.01 (51.1)	0.66 (16.7)	1.37 (34.9)
1	25	14	1 3/16-12	-CM-AN16-ST19	2.04 (51.8)	0.72 (18.3)	1.37 (34.9)
1	25	16	1 5/16-12	-CM-AN16-ST21	2.04 (51.8)	0.85 (21.5)	1.50 (38.1)

Rotatable Male Connectors

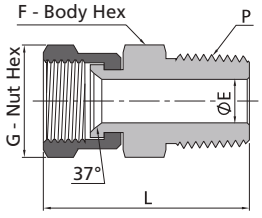

Tube O.D.		P-NPT Size	Basic Ordering Number	Dimensions, in. (mm)			
in.	mm			L	E	G	F
1/8	3	1/8	-CM-AS2-NS2	1.18 (30.0)	0.06 (1.6)	0.44 (11.1)	0.44 (11.1)
3/16	4	1/8	-CM-AS3-NS2	1.26 (32.0)	0.13 (3.2)	0.50 (12.7)	0.44 (11.1)
1/4	6	1/8	-CM-AS4-NS2	1.35 (34.2)	0.17 (4.4)	0.56 (14.3)	0.50 (12.7)
5/16	8	1/8	-CM-AS5-NS2	1.38 (35.0)	0.24 (6.0)	0.63 (15.9)	0.56 (14.3)
3/8	10	1/4	-CM-AS6-NS4	1.58 (40.2)	0.30 (7.5)	0.69 (17.5)	0.63 (15.9)
1/2	12	3/8	-CM-AS8-NS6	1.68 (42.7)	0.39 (9.9)	0.87 (22.2)	0.81 (20.6)
5/8	16	1/2	-CM-AS10-NS8	2.02 (51.3)	0.48 (12.3)	1.00 (25.4)	0.94 (23.8)
3/4	18	3/4	-CM-AS12-NS12	2.15 (54.5)	0.61 (15.5)	1.25 (31.8)	1.13 (28.6)
7/8	22	3/4	-CM-AS14-NS12	2.20 (56.0)	0.71 (18.0)	1.37 (34.9)	1.25 (31.8)
1	25	1	-CM-AS16-NS16	2.51 (63.7)	0.85 (21.5)	1.50 (38.1)	1.37 (34.9)
1 1/4	32	1 1/4	-CM-AS20-NS20	2.71 (68.9)	1.08 (27.5)	2.00 (50.8)	1.69 (42.9)
1 1/2	38	1 1/2	-CM-AS24-NS24	3.06 (77.6)	1.30 (33.0)	2.25 (57.2)	2.00 (50.8)
2	50	2	-CM-AS32-NS32	3.66 (92.9)	1.77 (45.0)	2.87 (73.0)	2.63 (66.7)

Female Connectors

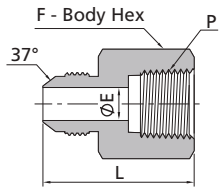

SAE 070103

Tube O.D.		P-NPT Size	Basic Ordering Number	Dimensions, in. (mm)		
in.	mm			L	E	F
1/8	3	1/8	-CF-AN2-NS2	1.12 (28.4)	0.06 (1.6)	0.56 (14.3)
3/16	4	1/8	-CF-AN3-NS2	1.13 (28.7)	0.13 (3.2)	0.56 (14.3)
1/4	6	1/8	-CF-AN4-NS2	1.19 (30.2)	0.17 (4.4)	0.56 (14.3)
1/4	6	1/4	-CF-AN4-NS4	1.39 (35.3)	0.17 (4.4)	0.75 (19.1)
5/16	8	1/8	-CF-AN5-NS2	1.17 (29.7)	0.24 (6.0)	0.56 (14.3)
5/16	8	1/4	-CF-AN5-NS4	1.39 (35.3)	0.24 (6.0)	0.75 (19.1)
3/8	10	1/4	-CF-AN6-NS4	1.40 (35.6)	0.30 (7.5)	0.75 (19.1)
3/8	10	3/8	-CF-AN6-NS6	1.46 (37.1)	0.30 (7.5)	0.87 (22.2)
1/2	12	3/8	-CF-AN8-NS6	1.56 (39.6)	0.39 (9.9)	0.87 (22.2)
1/2	12	1/2	-CF-AN8-NS8	1.80 (45.6)	0.39 (9.9)	1.13 (28.6)
5/8	16	1/2	-CF-AN10-NS8	1.89 (48.0)	0.48 (12.3)	1.13 (28.6)
3/4	18	1/2	-CF-AN12-NS8	2.05 (52.1)	0.61 (15.5)	1.13 (28.6)
3/4	18	3/4	-CF-AN12-NS12	2.06 (52.3)	0.61 (15.5)	1.37 (34.9)
7/8	22	3/4	-CF-AN14-NS12	2.06 (52.3)	0.72 (18.3)	1.37 (34.9)
1	25	1	-CF-AN16-NS16	2.35 (59.7)	0.85 (21.5)	1.63 (41.3)
1 1/4	32	1 1/4	-CF-AN20-NS20	2.49 (63.2)	1.08 (27.5)	2.00 (50.8)
1 1/2	38	1 1/2	-CF-AN24-NS24	2.62 (66.5)	1.30 (33.0)	2.37 (60.3)
2	50	2	-CF-AN32-NS32	2.97 (75.4)	1.77 (45.0)	2.87 (73.0)

Rotatable Female Connectors

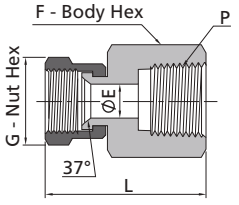

Tube O.D.		P-NPT Size	Basic Ordering Number	Dimensions, in. (mm)			
in.	mm			L	E	G	F
1/8	3	1/8	-CF-AS2-NS2	1.42 (36.1)	0.06 (1.6)	0.44 (11.1)	0.56 (14.3)
3/16	4	1/8	-CF-AS3-NS2	1.47 (37.3)	0.13 (3.2)	0.50 (12.7)	0.56 (14.3)
1/4	6	1/8	-CF-AS4-NS2	1.56 (39.7)	0.17 (4.4)	0.56 (14.3)	0.56 (14.3)
5/16	8	1/8	-CF-AS5-NS2	1.59 (40.5)	0.24 (6.0)	0.63 (15.9)	0.56 (14.3)
3/8	10	1/4	-CF-AS6-NS4	1.80 (45.8)	0.30 (7.5)	0.69 (17.5)	0.75 (19.1)
1/2	12	3/8	-CF-AS8-NS6	1.85 (47.0)	0.39 (9.9)	0.87 (22.2)	0.87 (22.2)
5/8	16	1/2	-CF-AS10-NS8	2.03 (51.6)	0.48 (12.3)	1.00 (25.4)	1.13 (28.6)
3/4	18	3/4	-CF-AS12-NS12	2.62 (66.6)	0.61 (15.5)	1.25 (31.8)	1.37 (34.9)
7/8	22	3/4	-CF-AS14-NS12	2.67 (67.8)	0.71 (18.0)	1.37 (34.9)	1.37 (34.9)
1	25	1	-CF-AS16-NS16	2.89 (73.5)	0.85 (21.5)	1.50 (38.1)	1.63 (41.3)
1 1/4	32	1 1/4	-CF-AS20-NS20	3.07 (78.1)	1.08 (27.5)	2.00 (50.8)	2.00 (50.8)
1 1/2	38	1 1/2	-CF-AS24-NS24	3.41 (86.7)	1.30 (33.0)	2.37 (60.3)	2.37 (60.3)
2	50	2	-CF-AS32-NS32	3.52 (89.3)	1.77 (45.0)	2.87 (73.0)	2.63 (66.7)

Unions

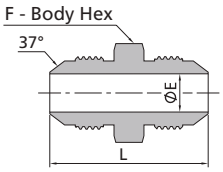

SAE 070101

Tube O.D.		Basic Ordering Number	Dimensions, in. (mm)		
in.	mm		L	E	F
1/8	3	-U-AN2	1.17 (29.7)	0.06 (1.6)	0.44 (11.1)
3/16	4	-U-AN3	1.23 (31.2)	0.13 (3.2)	0.44 (11.1)
1/4	6	-U-AN4	1.37 (34.8)	0.17 (4.4)	0.50 (12.7)
5/16	8	-U-AN5	1.37 (34.8)	0.24 (6.0)	0.56 (14.3)
3/8	10	-U-AN6	1.41 (35.8)	0.30 (7.5)	0.63 (15.9)
1/2	12	-U-AN8	1.62 (41.1)	0.39 (9.9)	0.81 (20.6)
5/8	16	-U-AN10	1.88 (47.8)	0.48 (12.3)	0.94 (23.8)
3/4	18	-U-AN12	2.16 (54.9)	0.61 (15.5)	1.13 (28.6)
7/8	22	-U-AN14	2.21 (56.1)	0.72 (18.3)	1.25 (31.8)
1	25	-U-AN16	2.25 (57.2)	0.85 (21.5)	1.37 (34.9)
1 1/4	32	-U-AN20	2.43 (61.7)	1.08 (27.5)	1.69 (42.9)
1 1/2	38	-U-AN24	2.75 (69.8)	1.30 (33.0)	2.00 (50.8)
2	50	-U-AN32	3.40 (86.4)	1.77 (45.0)	2.63 (66.7)

Large Hex Unions

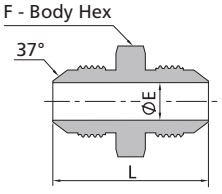

SAE 070119

Tube O.D.		Basic Ordering Number	Dimensions, in. (mm)		
in.	mm		L	E	F
1/8	3	-HUN-AN2	1.17 (29.7)	0.06 (1.6)	0.56 (14.3)
3/16	4	-HUN-AN3	1.23 (31.2)	0.13 (3.2)	0.63 (15.9)
1/4	6	-HUN-AN4	1.37 (34.8)	0.17 (4.4)	0.69 (17.5)
5/16	8	-HUN-AN5	1.37 (34.8)	0.24 (6.0)	0.75 (19.1)
3/8	10	-HUN-AN6	1.41 (35.8)	0.30 (7.5)	0.81 (20.6)
1/2	12	-HUN-AN8	1.62 (41.1)	0.39 (9.9)	1.00 (25.4)
5/8	16	-HUN-AN10	1.88 (47.8)	0.48 (12.3)	1.13 (28.6)
3/4	18	-HUN-AN12	2.16 (54.9)	0.61 (15.5)	1.37 (34.9)
7/8	22	-HUN-AN14	2.21 (56.1)	0.72 (18.3)	1.50 (38.1)
1	25	-HUN-AN16	2.25 (57.2)	0.85 (21.5)	1.63 (41.3)
1 1/4	32	-HUN-AN20	2.43 (61.7)	1.08 (27.5)	1.87 (47.6)
1 1/2	38	-HUN-AN24	2.75 (69.8)	1.30 (33.0)	2.13 (54.0)
2	50	-HUN-AN32	3.40 (86.4)	1.77 (45.0)	2.75 (69.9)

Reducing Adapters

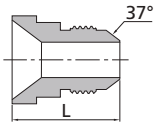

SAE 070123

Tube O.D.		Basic Ordering Number	L in.(mm)
in.-mm	in.-mm		
3/8-10	1/4-6	-RA-AN6-AN4	0.97 (24.6)
1/2-12	1/4-6	-RA-AN8-AN4	1.00 (25.4)
1/2-12	3/8-10	-RA-AN8-AN6	1.00 (25.4)
5/8-16	1/4-6	-RA-AN10-AN4	1.03 (26.2)
5/8-16	3/8-10	-RA-AN10-AN6	1.03 (26.2)
3/4-18	1/4-6	-RA-AN12-AN4	1.09 (27.7)
3/4-18	3/8-10	-RA-AN12-AN6	1.09 (27.7)
3/4-18	1/2-12	-RA-AN12-AN8	1.19 (30.2)
7/8-22	3/8-10	-RA-AN14-AN6	1.13 (28.7)
7/8-22	5/8-16	-RA-AN14-AN10	1.33 (33.7)
1-25	1/4-6	-RA-AN16-AN4	1.22 (31.0)
1-25	3/8-10	-RA-AN16-AN6	1.22 (31.0)
1-25	1/2-12	-RA-AN16-AN8	1.27 (32.3)
1-25	5/8-16	-RA-AN16-AN10	1.38 (35.1)
1-25	3/4-18	-RA-AN16-AN12	1.47 (37.3)
1 1/4-32	3/4-18	-RA-AN20-AN12	1.53 (38.8)
1 1/4-32	1-25	-RA-AN20-AN16	1.59 (40.3)
1 1/2-38	1/2-12	-RA-AN24-AN8	1.56 (39.6)
1 1/2-38	3/4-18	-RA-AN24-AN12	1.63 (41.4)
1 1/2-38	1-25	-RA-AN24-AN16	1.63 (41.4)
2-50	1 1/2-38	-RA-AN32-AN24	1.91 (48.5)

Sleeves

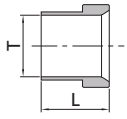

SAE 070115

T-Tube O.D.		Basic Ordering Number		L in.(mm)
in.	mm	in.	mm	
1/8	3	-SL-AN2	-SL-AN3M	0.34 (8.6)
3/16	4	-SL-AN3	-SL-AN4M	0.34 (8.6)
1/4	6	-SL-AN4	-SL-AN6M	0.41 (10.4)
5/16	8	-SL-AN5	-SL-AN8M	0.44 (11.2)
3/8	10	-SL-AN6	-SL-AN10M	0.50 (12.7)
1/2	12	-SL-AN8	-SL-AN12M	0.56 (14.2)
5/8	16	-SL-AN10	-SL-AN16M	0.66 (16.8)
3/4	18	-SL-AN12	-SL-AN18M	0.68 (17.3)
7/8	22	-SL-AN14	-SL-AN22M	0.76 (19.3)
1	25	-SL-AN16	-SL-AN25M	0.78 (19.8)
1 1/4	32	-SL-AN20	-SL-AN32M	0.91 (23.1)
1 1/2	38	-SL-AN24	-SL-AN38M	1.12 (28.4)
2	50	-SL-AN32	-SL-AN50M	1.19 (30.2)

Bulkhead Unions

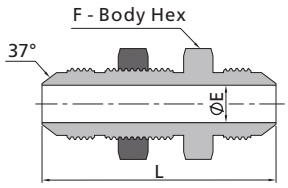

SAE 070601

Tube O.D.		Basic Ordering Number	Dimensions, in. (mm)		
in.	mm		L	E	F
3/16	4	-BU-AN3	1.90 (48.3)	0.13 (3.2)	0.63 (15.9)
1/4	6	-BU-AN4	2.07 (52.6)	0.17 (4.4)	0.69 (17.5)
5/16	8	-BU-AN5	2.07 (52.6)	0.24 (6.0)	0.75 (19.1)
3/8	10	-BU-AN6	2.18 (55.4)	0.30 (7.5)	0.81 (20.6)
1/2	12	-BU-AN8	2.44 (62.0)	0.39 (9.9)	1.00 (25.4)
5/8	16	-BU-AN10	2.74 (69.6)	0.48 (12.3)	1.13 (28.6)
3/4	18	-BU-AN12	3.09 (78.5)	0.61 (15.5)	1.37 (34.9)
7/8	22	-BU-AN14	3.12 (79.2)	0.72 (18.3)	1.50 (38.1)
1	25	-BU-AN16	3.14 (79.8)	0.85 (21.5)	1.63 (41.3)
1 1/4	32	-BU-AN20	3.31 (84.1)	1.08 (27.5)	1.87 (47.6)
1 1/2	38	-BU-AN24	3.52 (89.4)	1.30 (33.0)	2.13 (54.0)
2	50	-BU-AN32	4.20 (106.7)	1.77 (45.0)	2.75 (69.9)

Tube Caps

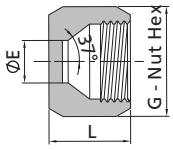

SAE 070112

Tube O.D.		Basic Ordering Number	Dimensions, in. (mm)		
in.	mm		L	E	G
1/8	3	-TC-AN2	0.50 (12.7)	0.06 (1.6)	0.37 (9.5)
3/16	4	-TC-AN3	0.56 (14.3)	0.13 (3.2)	0.44 (11.1)
1/4	6	-TC-AN4	0.59 (15.1)	0.17 (4.4)	0.56 (14.3)
5/16	8	-TC-AN5	0.61 (15.5)	0.24 (6.0)	0.63 (15.9)
3/8	10	-TC-AN6	0.63 (15.9)	0.30 (7.5)	0.69 (17.5)
1/2	12	-TC-AN8	0.75 (19.1)	0.39 (9.9)	0.87 (22.2)
5/8	16	-TC-AN10	0.84 (21.4)	0.48 (12.3)	1.00 (25.4)
3/4	18	-TC-AN12	0.91 (23.0)	0.61 (15.5)	1.25 (31.8)
7/8	22	-TC-AN14	0.97 (24.6)	0.72 (18.3)	1.37 (34.9)
1	25	-TC-AN16	1.02 (25.8)	0.85 (21.5)	1.50 (38.1)
1 1/4	32	-TC-AN20	1.06 (27.0)	1.08 (27.5)	2.00 (50.8)
1 1/2	38	-TC-AN24	1.19 (30.2)	1.30 (33.0)	2.25 (57.2)
2	50	-TC-AN32	1.44 (36.5)	1.77 (45.0)	2.87 (73.0)

Bulkhead Lock Nuts

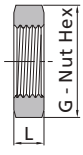

SAE 070118

Tube O.D.		Basic Ordering Number	Dimensions, in. (mm)	
in.	mm		L	G
3/16	4	-BN-AN3	0.22 (5.6)	0.63 (15.9)
1/4	6	-BN-AN4	0.28 (7.1)	0.69 (17.5)
5/16	8	-BN-AN5	0.28 (7.1)	0.75 (19.1)
3/8	10	-BN-AN6	0.27 (6.9)	0.81 (20.6)
1/2	12	-BN-AN8	0.31 (7.9)	1.00 (25.4)
5/8	16	-BN-AN10	0.36 (9.1)	1.13 (28.6)
3/4	18	-BN-AN12	0.41 (10.4)	1.37 (34.9)
7/8	22	-BN-AN14	0.41 (10.4)	1.50 (38.1)
1	25	-BN-AN16	0.41 (10.4)	1.63 (41.3)
1 1/4	32	-BN-AN20	0.41 (10.4)	1.87 (47.6)
1 1/2	38	-BN-AN24	0.41 (10.4)	2.13 (54.0)
2	50	-BN-AN32	0.41 (10.4)	2.75 (69.9)

Tube Plugs

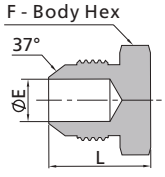

SAE 070109

Tube O.D.		Basic Ordering Number	Dimensions, in. (mm)		
in.	mm		L	E	F
1/8	3	-TP-AN2	0.70 (17.8)	0.06 (1.6)	0.44 (11.1)
3/16	4	-TP-AN3	0.73 (18.5)	0.13 (3.2)	0.44 (11.1)
1/4	6	-TP-AN4	0.80 (20.3)	0.17 (4.4)	0.50 (12.7)
5/16	8	-TP-AN5	0.80 (20.3)	0.24 (6.0)	0.56 (14.3)
3/8	10	-TP-AN6	0.84 (21.3)	0.30 (7.5)	0.63 (15.9)
1/2	12	-TP-AN8	0.94 (23.9)	0.39 (9.9)	0.81 (20.6)
5/8	16	-TP-AN10	1.10 (27.9)	0.48 (12.3)	0.94 (23.8)
3/4	18	-TP-AN12	1.28 (32.5)	0.61 (15.5)	1.13 (28.6)
7/8	22	-TP-AN14	1.31 (33.3)	0.72 (18.3)	1.25 (31.8)
1	25	-TP-AN16	1.33 (33.8)	0.85 (21.5)	1.37 (34.9)
1 1/4	32	-TP-AN20	1.45 (36.8)	1.08 (27.5)	1.69 (42.9)
1 1/2	38	-TP-AN24	1.65 (41.9)	1.30 (33.0)	2.00 (50.8)
2	50	-TP-AN32	2.05 (52.1)	1.77 (45.0)	2.63 (66.7)

Male Elbows

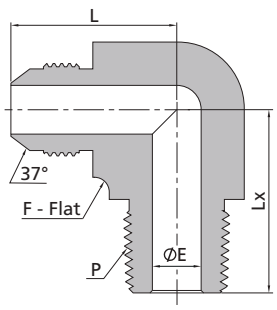

SAE 070202

Tube O.D.		P-NPT Size	Basic Ordering Number	Dimensions, in. (mm)			
in.	mm			L	E	F	Lx
1/8	3	1/8	-LM-AN2-NS2	0.77 (19.6)	0.06 (1.6)	0.44 (11.1)	0.72 (18.3)
3/16	4	1/8	-LM-AN3-NS2	0.83 (21.1)	0.13 (3.2)	0.44 (11.1)	0.72 (18.3)
1/4	6	1/8	-LM-AN4-NS2	0.89 (22.6)	0.17 (4.4)	0.50 (12.7)	0.78 (19.8)
1/4	6	1/4	-LM-AN4-NS4	1.06 (26.9)	0.17 (4.4)	0.56 (14.3)	1.09 (27.7)
5/16	8	1/8	-LM-AN5-NS2	0.95 (24.1)	0.19 (4.8)	0.56 (14.3)	0.78 (19.8)
5/16	8	1/4	-LM-AN5-NS4	1.06 (26.9)	0.24 (6.0)	0.56 (14.3)	1.09 (27.7)
3/8	10	1/8	-LM-AN6-NS2	1.06 (26.9)	0.19 (4.8)	0.56 (14.3)	0.90 (22.8)
3/8	10	1/4	-LM-AN6-NS4	1.06 (26.9)	0.28 (7.1)	0.56 (14.3)	1.09 (27.7)
3/8	10	3/8	-LM-AN6-NS6	1.14 (29.0)	0.30 (7.5)	0.69 (17.5)	1.22 (31.0)
3/8	10	1/2	-LM-AN6-NS8	1.23 (31.2)	0.30 (7.5)	0.81 (20.6)	1.47 (37.3)
1/2	12	1/4	-LM-AN8-NS4	1.25 (31.8)	0.28 (7.1)	0.81 (20.6)	1.22 (31.0)
1/2	12	3/8	-LM-AN8-NS6	1.25 (31.8)	0.39 (9.9)	0.81 (20.6)	1.22 (31.0)
1/2	12	1/2	-LM-AN8-NS8	1.33 (33.7)	0.39 (9.9)	0.81 (20.6)	1.47 (37.3)
1/2	12	3/4	-LM-AN8-NS12	1.42 (36.0)	0.35 (9.0)	1.00 (25.4)	1.59 (40.4)
5/8	16	3/8	-LM-AN10-NS6	1.45 (36.8)	0.39 (9.9)	0.81 (20.6)	1.30 (33.0)
5/8	16	1/2	-LM-AN10-NS8	1.45 (36.8)	0.48 (12.3)	0.81 (20.6)	1.47 (37.3)
5/8	16	3/4	-LM-AN10-NS12	1.53 (38.9)	0.48 (12.3)	1.00 (25.4)	1.59 (40.4)
3/4	18	3/4	-LM-AN12-NS12	1.66 (42.2)	0.61 (15.5)	1.06 (27.0)	1.59 (40.4)
3/4	18	1	-LM-AN12-NS16	1.66 (42.2)	0.61 (15.5)	1.25 (31.8)	1.98 (50.4)
7/8	22	3/4	-LM-AN14-NS12	1.80 (45.7)	0.62 (15.7)	1.25 (31.8)	1.69 (42.9)
1	25	3/4	-LM-AN16-NS12	1.81 (46.0)	0.62 (15.7)	1.37 (34.9)	1.78 (45.2)
1	25	1	-LM-AN16-NS16	1.81 (46.0)	0.85 (21.5)	1.37 (34.9)	1.97 (50.0)
1 1/4	32	1	-LM-AN20-NS16	2.06 (52.3)	0.94 (23.8)	1.69 (42.9)	2.35 (59.6)
1 1/4	32	1 1/4	-LM-AN20-NS20	2.06 (52.3)	1.08 (27.5)	1.69 (42.9)	2.38 (60.5)

Positionable Male Elbows

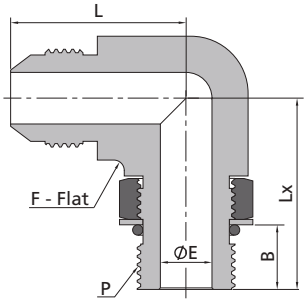

SAE 070220

Tube O.D.		P-SAE Nominal Size	P-SAE/MS Thread Specification	Basic Ordering Number	Dimensions, in. (mm)				
in.	mm				L	E	F	Lx	B
1/8	3	2	5/16-24	-LP-AN2-ST5	0.77 (19.6)	0.06 (1.6)	0.44 (11.1)	0.89 (22.6)	0.33 (8.4)
3/16	4	3	3/8-24	-LP-AN3-ST6	0.83 (21.1)	0.13 (3.2)	0.44 (11.1)	0.89 (22.6)	0.33 (8.4)
1/4	6	4	7/16-20	-LP-AN4-ST7	0.89 (22.6)	0.17 (4.4)	0.50 (12.7)	1.03 (26.2)	0.39 (9.8)
5/16	8	5	1/2-20	-LP-AN5-ST8	0.95 (24.1)	0.24 (6.0)	0.56 (14.3)	1.13 (28.7)	0.39 (9.8)
3/8	10	6	9/16-18	-LP-AN6-ST9	1.06 (26.9)	0.30 (7.5)	0.63 (15.9)	1.25 (31.8)	0.43 (11.0)
1/2	12	8	3/4-16	-LP-AN8-ST12	1.25 (31.8)	0.39 (9.9)	0.81 (20.6)	1.45 (36.8)	0.49 (12.5)
5/8	16	10	7/8-14	-LP-AN10-ST14	1.45 (36.8)	0.48 (12.3)	0.94 (23.8)	1.70 (43.2)	0.56 (14.2)
3/4	18	12	1 1/16-12	-LP-AN12-ST17	1.66 (42.2)	0.61 (15.5)	1.25 (31.8)	1.94 (49.3)	0.65 (16.5)
7/8	22	14	1 3/16-12	-LP-AN14-ST19	1.80 (45.7)	0.72 (18.3)	1.25 (31.8)	2.00 (50.8)	0.65 (16.5)
1	25	16	1 5/16-12	-LP-AN16-ST21	1.81 (46.0)	0.85 (21.5)	1.37 (34.9)	2.05 (52.1)	0.65 (16.5)
1 1/4	32	20	1 5/8-12	-LP-AN20-ST26	2.06 (52.3)	1.08 (27.5)	1.69 (42.9)	2.25 (57.2)	0.65 (16.5)
1 1/2	38	24	1 7/8-12	-LP-AN24-ST30	2.33 (59.2)	1.30 (33.0)	2.00 (50.8)	2.39 (60.7)	0.65 (16.5)

45° Male Elbows

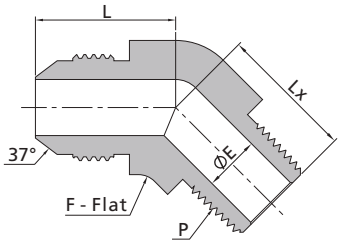

SAE 070302

Tube O.D.		P-NPT Size	Basic Ordering Number	Dimensions, in. (mm)			
in.	mm			L	E	F	Lx
1/8	3	1/8	-VM-AN2-NS2	0.69 (17.5)	0.06 (1.6)	0.44 (11.1)	0.52 (13.2)
3/16	4	1/8	-VM-AN3-NS2	0.69 (17.5)	0.13 (3.2)	0.44 (11.1)	0.52 (13.2)
1/4	6	1/8	-VM-AN4-NS2	0.72 (18.3)	0.17 (4.4)	0.50 (12.7)	0.64 (16.3)
5/16	8	1/8	-VM-AN5-NS2	0.77 (19.6)	0.19 (4.8)	0.56 (14.3)	0.64 (16.3)
3/8	10	1/4	-VM-AN6-NS4	0.83 (21.1)	0.28 (7.1)	0.56 (14.3)	0.86 (21.8)
1/2	12	3/8	-VM-AN8-NS6	0.98 (24.9)	0.39 (9.9)	0.69 (17.5)	0.95 (24.1)
5/8	16	1/2	-VM-AN10-NS8	1.11 (28.2)	0.48 (12.3)	0.81 (20.6)	1.17 (29.7)
3/4	18	3/4	-VM-AN12-NS12	1.28 (32.5)	0.61 (15.5)	1.06 (27.0)	1.20 (30.5)
7/8	22	3/4	-VM-AN14-NS12	1.42 (36.0)	0.72 (18.3)	1.25 (31.8)	1.30 (33.0)
1	25	1	-VM-AN16-NS16	1.47 (37.3)	0.85 (21.5)	1.37 (34.9)	1.48 (37.6)
1 1/2	38	1 1/2	-VM-AN24-NS24	1.78 (45.2)	1.30 (33.0)	2.00 (50.8)	1.77 (45.0)

Female Elbows

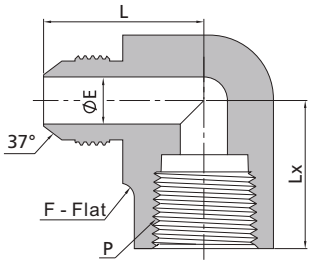

SAE 070203

Tube O.D.		P-NPT Size	Basic Ordering Number	Dimensions, in. (mm)			
in.	mm			L	E	F	Lx
1/8	3	1/8	-LF-AN2-NS2	1.00 (25.4)	0.06 (1.6)	0.56 (14.3)	0.66 (16.8)
3/16	4	1/8	-LF-AN3-NS2	1.03 (26.2)	0.13 (3.2)	0.56 (14.3)	0.66 (16.8)
1/4	6	1/8	-LF-AN4-NS2	1.08 (27.4)	0.17 (4.4)	0.56 (14.3)	0.66 (16.8)
1/4	6	1/4	-LF-AN4-NS4	1.22 (30.9)	0.17 (4.4)	0.81 (20.6)	0.88 (22.4)
5/16	8	1/8	-LF-AN5-NS2	1.08 (27.4)	0.24 (6.0)	0.56 (14.3)	0.66 (16.8)
5/16	8	1/4	-LF-AN5-NS4	1.22 (30.9)	0.24 (6.0)	0.81 (20.6)	0.88 (22.4)
3/8	10	1/8	-LF-AN6-NS2	1.06 (26.9)	0.30 (7.5)	0.63 (15.9)	0.66 (16.8)
3/8	10	1/4	-LF-AN6-NS4	1.23 (31.2)	0.30 (7.5)	0.81 (20.6)	0.88 (22.4)
3/8	10	3/8	-LF-AN6-NS6	1.31 (33.2)	0.30 (7.5)	0.94 (23.8)	1.02 (25.9)
1/2	12	1/4	-LF-AN8-NS4	1.24 (31.6)	0.39 (9.9)	0.81 (20.6)	0.88 (22.4)
1/2	12	3/8	-LF-AN8-NS6	1.42 (36.1)	0.39 (9.9)	0.94 (23.8)	1.02 (25.9)
1/2	12	1/2	-LF-AN8-NS8	1.42 (36.1)	0.39 (9.9)	1.06 (27.0)	1.23 (31.2)
5/8	16	1/2	-LF-AN10-NS8	1.64 (41.7)	0.48 (12.3)	1.06 (27.0)	1.23 (31.2)
3/4	18	1/2	-LF-AN12-NS8	1.66 (42.1)	0.61 (15.5)	1.25 (31.8)	1.23 (31.2)
3/4	18	3/4	-LF-AN12-NS12	1.89 (48.0)	0.61 (15.5)	1.37 (34.9)	1.36 (34.5)
7/8	22	3/4	-LF-AN14-NS12	1.86 (47.2)	0.72 (18.3)	1.37 (34.9)	1.42 (36.1)
1	25	1	-LF-AN16-NS16	2.17 (55.1)	0.85 (21.5)	1.69 (42.9)	1.62 (41.1)
1 1/4	32	1 1/4	-LF-AN20-NS20	2.33 (59.2)	1.08 (27.5)	2.00 (50.8)	1.70 (43.2)

Union Elbows

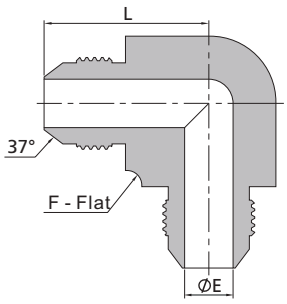

SAE 070201

Tube O.D.		Basic Ordering Number	Dimensions, in. (mm)		
in.	mm		L	E	F
1/8	3	-LU-AN2	0.77 (19.6)	0.06 (1.6)	0.44 (11.1)
3/16	4	-LU-AN3	0.83 (21.1)	0.13 (3.2)	0.44 (11.1)
1/4	6	-LU-AN4	0.89 (22.6)	0.17 (4.4)	0.50 (12.7)
5/16	8	-LU-AN5	0.95 (24.1)	0.24 (6.0)	0.56 (14.3)
3/8	10	-LU-AN6	1.06 (26.9)	0.30 (7.5)	0.56 (14.3)
1/2	12	-LU-AN8	1.25 (31.8)	0.39 (9.9)	0.81 (20.6)
5/8	16	-LU-AN10	1.45 (36.8)	0.48 (12.3)	0.81 (20.6)
3/4	18	-LU-AN12	1.66 (42.2)	0.61 (15.5)	1.06 (27.0)
7/8	22	-LU-AN14	1.80 (45.7)	0.72 (18.3)	1.25 (31.8)
1	25	-LU-AN16	1.81 (46.0)	0.85 (21.5)	1.37 (34.9)
1 1/4	32	-LU-AN20	2.06 (52.3)	1.08 (27.5)	1.69 (42.9)
1 1/2	38	-LU-AN24	2.33 (59.2)	1.30 (33.0)	2.00 (50.8)

Rotatable Union Elbows

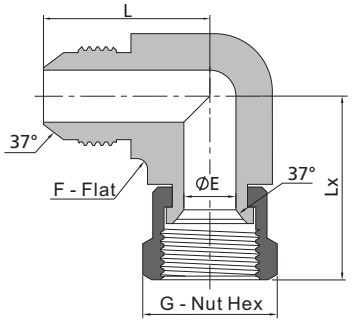

SAE 070221

Tube O.D.		Basic Ordering Number	Dimensions, in. (mm)				
in.	mm		L	E	F	Lx	G
1/8	3	-LU-AN2-AS2	0.77 (19.6)	0.06 (1.6)	0.44 (11.1)	0.97 (24.6)	0.44 (11.1)
3/16	4	-LU-AN3-AS3	0.83 (21.1)	0.13 (3.2)	0.44 (11.1)	1.00 (25.4)	0.50 (12.7)
1/4	6	-LU-AN4-AS4	0.89 (22.6)	0.17 (4.4)	0.50 (12.7)	1.00 (25.4)	0.56 (14.3)
5/16	8	-LU-AN5-AS5	0.95 (24.1)	0.24 (6.0)	0.56 (14.3)	1.06 (26.9)	0.63 (15.9)
3/8	10	-LU-AN6-AS6	1.06 (26.9)	0.30 (7.5)	0.56 (14.3)	1.25 (31.8)	0.69 (17.5)
1/2	12	-LU-AN8-AS8	1.25 (31.8)	0.39 (9.9)	0.81 (20.6)	1.38 (35.1)	0.87 (22.2)
5/8	16	-LU-AN10-AS10	1.45 (36.8)	0.48 (12.3)	0.81 (20.6)	1.62 (41.1)	1.00 (25.4)
3/4	18	-LU-AN12-AS12	1.66 (42.2)	0.61 (15.5)	1.06 (27.0)	1.75 (44.4)	1.25 (31.8)
7/8	22	-LU-AN14-AS14	1.80 (45.7)	0.72 (18.3)	1.25 (31.8)	1.78 (45.2)	1.37 (34.9)
1	25	-LU-AN16-AS16	1.81 (46.0)	0.85 (21.5)	1.37 (34.9)	2.00 (50.8)	1.50 (38.1)
1 1/4	32	-LU-AN20-AS20	2.06 (52.3)	1.08 (27.5)	1.69 (42.9)	2.31 (58.7)	2.00 (50.8)
1 1/2	38	-LU-AN24-AS24	2.33 (59.2)	1.30 (33.0)	2.00 (50.8)	2.59 (65.8)	2.37 (60.3)

Male Branch Tees

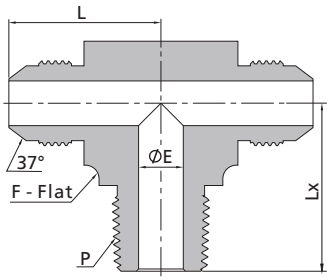

SAE 070425

Tube O.D.		P-NPT Size	Basic Ordering Number	Dimensions, in. (mm)			
in.	mm			L	E	F	Lx
1/8	3	1/8	-TTM-AN2-NS2	0.77 (19.6)	0.06 (1.6)	0.44 (11.1)	0.72 (18.3)
3/16	4	1/8	-TTM-AN3-NS2	0.83 (21.1)	0.13 (3.2)	0.44 (11.1)	0.72 (18.3)
1/4	6	1/8	-TTM-AN4-NS2	0.89 (22.6)	0.17 (4.4)	0.50 (12.7)	0.78 (19.8)
1/4	6	1/4	-TTM-AN4-NS4	1.06 (26.9)	0.17 (4.4)	0.56 (14.3)	1.09 (27.7)
5/16	8	1/8	-TTM-AN5-NS2	0.95 (24.1)	0.19 (4.8)	0.56 (14.3)	0.78 (19.8)
5/16	8	1/4	-TTM-AN5-NS4	1.06 (26.9)	0.24 (6.0)	0.56 (14.3)	1.09 (27.7)
3/8	10	1/8	-TTM-AN6-NS2	1.06 (26.9)	0.19 (4.8)	0.56 (14.3)	0.90 (22.8)
3/8	10	1/4	-TTM-AN6-NS4	1.06 (26.9)	0.28 (7.1)	0.56 (14.3)	1.09 (27.7)
3/8	10	3/8	-TTM-AN6-NS6	1.14 (29.0)	0.30 (7.5)	0.69 (17.5)	1.22 (31.0)
3/8	10	1/2	-TTM-AN6-NS8	1.23 (31.2)	0.30 (7.5)	0.81 (20.6)	1.47 (37.3)
1/2	12	1/4	-TTM-AN8-NS4	1.25 (31.8)	0.28 (7.1)	0.81 (20.6)	1.22 (31.0)
1/2	12	3/8	-TTM-AN8-NS6	1.25 (31.8)	0.39 (9.9)	0.81 (20.6)	1.22 (31.0)
1/2	12	1/2	-TTM-AN8-NS8	1.33 (33.7)	0.39 (9.9)	0.81 (20.6)	1.47 (37.3)
1/2	12	3/4	-TTM-AN8-NS12	1.42 (36.0)	0.39 (9.9)	1.00 (25.4)	1.59 (40.4)
5/8	16	3/8	-TTM-AN10-NS6	1.45 (36.8)	0.39 (9.9)	0.81 (20.6)	1.30 (33.0)
5/8	16	1/2	-TTM-AN10-NS8	1.45 (36.8)	0.48 (12.3)	0.81 (20.6)	1.47 (37.3)
5/8	16	3/4	-TTM-AN10-NS12	1.53 (38.9)	0.48 (12.3)	1.00 (25.4)	1.59 (40.4)
3/4	18	3/4	-TTM-AN12-NS12	1.66 (42.2)	0.61 (15.5)	1.06 (27.0)	1.59 (40.4)
3/4	18	1	-TTM-AN12-NS16	1.66 (42.2)	0.61 (15.5)	1.25 (31.8)	1.98 (50.4)
7/8	22	3/4	-TTM-AN14-NS12	1.80 (45.7)	0.72 (18.3)	1.25 (31.8)	1.69 (42.9)
1	25	3/4	-TTM-AN16-NS12	1.81 (46.0)	0.72 (18.3)	1.37 (34.9)	1.78 (45.2)
1	25	1	-TTM-AN16-NS16	1.81 (46.0)	0.85 (21.5)	1.37 (34.9)	1.97 (50.0)
1 1/4	32	1	-TTM-AN20-NS16	2.06 (52.3)	0.94 (23.8)	1.69 (42.9)	2.35 (59.6)
1 1/4	32	1 1/4	-TTM-AN20-NS20	2.06 (52.3)	1.08 (27.5)	1.69 (42.9)	2.38 (60.5)

Positionable Male Branch Tees

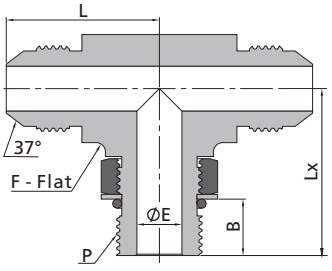

SAE 070429

Tube O.D.		P-SAE Nominal Size	P-SAE/MS Thread Specification	Basic Ordering Number	Dimensions, in. (mm)				
in.	mm				L	E	F	Lx	B
1/8	3	2	5/16-24	-TTP-AN2-ST5	0.77 (19.6)	0.06 (1.6)	0.44 (11.1)	0.89 (22.6)	0.33 (8.4)
3/16	4	3	3/8-24	-TTP-AN3-ST6	0.83 (21.1)	0.13 (3.2)	0.44 (11.1)	0.89 (22.6)	0.33 (8.4)
1/4	6	4	7/16-20	-TTP-AN4-ST7	0.89 (22.6)	0.17 (4.4)	0.50 (12.7)	1.03 (26.2)	0.39 (9.8)
5/16	8	5	1/2-20	-TTP-AN5-ST8	0.95 (24.1)	0.24 (6.0)	0.56 (14.3)	1.13 (28.7)	0.39 (9.8)
3/8	10	6	9/16-18	-TTP-AN6-ST9	1.06 (26.9)	0.30 (7.5)	0.63 (15.9)	1.25 (31.8)	0.43 (11.0)
1/2	12	8	3/4-16	-TTP-AN8-ST12	1.25 (31.8)	0.39 (9.9)	0.81 (20.6)	1.45 (36.8)	0.49 (12.5)
5/8	16	10	7/8-14	-TTP-AN10-ST14	1.45 (36.8)	0.48 (12.3)	0.94 (23.8)	1.70 (43.2)	0.56 (14.2)
3/4	18	12	1 1/16-12	-TTP-AN12-ST17	1.66 (42.2)	0.61 (15.5)	1.25 (31.8)	1.94 (49.3)	0.65 (16.5)
7/8	22	14	1 3/16-12	-TTP-AN14-ST19	1.80 (45.7)	0.72 (18.3)	1.25 (31.8)	2.00 (50.8)	0.65 (16.5)
1	25	16	1 5/16-12	-TTP-AN16-ST21	1.81 (46.0)	0.85 (21.5)	1.37 (34.9)	2.05 (52.1)	0.65 (16.5)
1 1/4	32	20	1 5/8-12	-TTP-AN20-ST26	2.06 (52.3)	1.08 (27.5)	1.69 (42.9)	2.25 (57.2)	0.65 (16.5)
1 1/2	38	24	1 7/8-12	-TTP-AN24-ST30	2.33 (59.2)	1.30 (33.0)	2.00 (50.8)	2.39 (60.7)	0.65 (16.5)

Male Run Tees

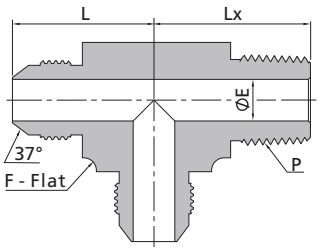

SAE 070424

Tube O.D.		P-NPT Size	Basic Ordering Number	Dimensions, in. (mm)			
in.	mm			L	E	F	Lx
1/8	3	1/8	-TMT-AN2-NS2	0.77 (19.6)	0.06 (1.6)	0.44 (11.1)	0.72 (18.3)
3/16	4	1/8	-TMT-AN3-NS2	0.83 (21.1)	0.13 (3.2)	0.44 (11.1)	0.72 (18.3)
1/4	6	1/8	-TMT-AN4-NS2	0.89 (22.6)	0.17 (4.4)	0.50 (12.7)	0.78 (19.8)
1/4	6	1/4	-TMT-AN4-NS4	1.06 (26.9)	0.17 (4.4)	0.56 (14.3)	1.09 (27.7)
5/16	8	1/8	-TMT-AN5-NS2	0.95 (24.1)	0.19 (4.8)	0.56 (14.3)	0.78 (19.8)
5/16	8	1/4	-TMT-AN5-NS4	1.06 (26.9)	0.24 (6.0)	0.56 (14.3)	1.09 (27.7)
3/8	10	1/8	-TMT-AN6-NS2	1.06 (26.9)	0.19 (4.8)	0.56 (14.3)	0.90 (22.8)
3/8	10	1/4	-TMT-AN6-NS4	1.06 (26.9)	0.28 (7.1)	0.56 (14.3)	1.09 (27.7)
3/8	10	3/8	-TMT-AN6-NS6	1.14 (29.0)	0.30 (7.5)	0.69 (17.5)	1.22 (31.0)
3/8	10	1/2	-TMT-AN6-NS8	1.23 (31.2)	0.30 (7.5)	0.81 (20.6)	1.47 (37.3)
1/2	12	1/4	-TMT-AN8-NS4	1.25 (31.8)	0.28 (7.1)	0.81 (20.6)	1.22 (31.0)
1/2	12	3/8	-TMT-AN8-NS6	1.25 (31.8)	0.39 (9.9)	0.81 (20.6)	1.22 (31.0)
1/2	12	1/2	-TMT-AN8-NS8	1.33 (33.7)	0.39 (9.9)	0.81 (20.6)	1.47 (37.3)
1/2	12	3/4	-TMT-AN8-NS12	1.42 (36.0)	0.39 (9.9)	1.00 (25.4)	1.59 (40.4)
5/8	16	3/8	-TMT-AN10-NS6	1.45 (36.8)	0.39 (9.9)	0.81 (20.6)	1.30 (33.0)
5/8	16	1/2	-TMT-AN10-NS8	1.45 (36.8)	0.48 (12.3)	0.81 (20.6)	1.47 (37.3)
5/8	16	3/4	-TMT-AN10-NS12	1.53 (38.9)	0.48 (12.3)	1.00 (25.4)	1.59 (40.4)
3/4	18	3/4	-TMT-AN12-NS12	1.66 (42.2)	0.61 (15.5)	1.06 (27.0)	1.59 (40.4)
3/4	18	1	-TMT-AN12-NS16	1.66 (42.2)	0.61 (15.5)	1.25 (31.8)	1.98 (50.4)
7/8	22	3/4	-TMT-AN14-NS12	1.80 (45.7)	0.72 (18.3)	1.25 (31.8)	1.69 (42.9)
1	25	3/4	-TMT-AN16-NS12	1.81 (46.0)	0.72 (18.3)	1.37 (34.9)	1.78 (45.2)
1	25	1	-TMT-AN16-NS16	1.81 (46.0)	0.85 (21.5)	1.37 (34.9)	1.97 (50.0)
1 1/4	32	1	-TMT-AN20-NS16	2.06 (52.3)	0.94 (23.8)	1.69 (42.9)	2.35 (59.6)
1 1/4	32	1 1/4	-TMT-AN20-NS20	2.06 (52.3)	1.08 (27.5)	1.69 (42.9)	2.38 (60.5)

Female Branch Tees

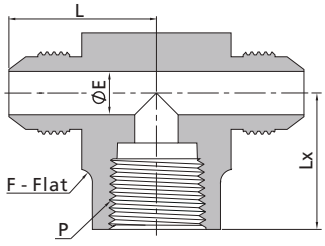

SAE 070427

Tube O.D.		P-NPT Size	Basic Ordering Number	Dimensions, in. (mm)			
in.	mm			L	E	F	Lx
1/8	3	1/8	-TTF-AN2-NS2	1.00 (25.4)	0.06 (1.6)	0.56 (14.3)	0.66 (16.8)
3/16	4	1/8	-TTF-AN3-NS2	1.03 (26.2)	0.13 (3.2)	0.56 (14.3)	0.66 (16.8)
1/4	6	1/8	-TTF-AN4-NS2	1.08 (27.4)	0.17 (4.4)	0.56 (14.3)	0.66 (16.8)
1/4	6	1/4	-TTF-AN4-NS4	1.22 (30.9)	0.17 (4.4)	0.81 (20.6)	0.88 (22.4)
5/16	8	1/8	-TTF-AN5-NS2	1.08 (27.4)	0.24 (6.0)	0.56 (14.3)	0.66 (16.8)
5/16	8	1/4	-TTF-AN5-NS4	1.22 (30.9)	0.24 (6.0)	0.81 (20.6)	0.88 (22.4)
3/8	10	1/8	-TTF-AN6-NS2	1.06 (26.9)	0.30 (7.5)	0.63 (15.9)	0.66 (16.8)
3/8	10	1/4	-TTF-AN6-NS4	1.23 (31.2)	0.30 (7.5)	0.81 (20.6)	0.88 (22.4)
3/8	10	3/8	-TTF-AN6-NS6	1.31 (33.2)	0.30 (7.5)	0.94 (23.8)	1.02 (25.9)
1/2	12	1/4	-TTF-AN8-NS4	1.24 (31.6)	0.39 (9.9)	0.81 (20.6)	0.88 (22.4)
1/2	12	3/8	-TTF-AN8-NS6	1.42 (36.1)	0.39 (9.9)	0.94 (23.8)	1.02 (25.9)
1/2	12	1/2	-TTF-AN8-NS8	1.42 (36.1)	0.39 (9.9)	1.06 (27.0)	1.23 (31.2)
5/8	16	1/2	-TTF-AN10-NS8	1.64 (41.7)	0.48 (12.3)	1.06 (27.0)	1.23 (31.2)
3/4	18	1/2	-TTF-AN12-NS8	1.66 (42.1)	0.61 (15.5)	1.25 (31.8)	1.23 (31.2)
3/4	18	3/4	-TTF-AN12-NS12	1.89 (48.0)	0.61 (15.5)	1.37 (34.9)	1.36 (34.5)
7/8	22	3/4	-TTF-AN14-NS12	1.86 (47.2)	0.72 (18.3)	1.37 (34.9)	1.42 (36.1)
1	25	1	-TTF-AN16-NS16	2.17 (55.1)	0.85 (21.5)	1.69 (42.9)	1.62 (41.1)
1 1/4	32	1 1/4	-TTF-AN20-NS20	2.33 (59.2)	1.08 (27.5)	2.00 (50.8)	1.70 (43.2)

Female Run Tees

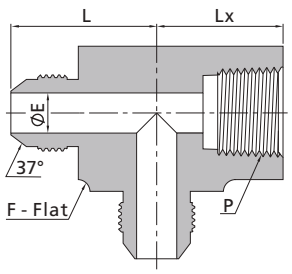

SAE 070426

Tube O.D.		P-NPT Size	Basic Ordering Number	Dimensions, in. (mm)			
in.	mm			L	E	F	Lx
1/8	3	1/8	-TFT-AN2-NS2	1.00 (25.4)	0.06 (1.6)	0.56 (14.3)	0.66 (16.8)
3/16	4	1/8	-TFT-AN3-NS2	1.03 (26.2)	0.13 (3.2)	0.56 (14.3)	0.66 (16.8)
1/4	6	1/8	-TFT-AN4-NS2	1.08 (27.4)	0.17 (4.4)	0.56 (14.3)	0.66 (16.8)
1/4	6	1/4	-TFT-AN4-NS4	1.22 (30.9)	0.17 (4.4)	0.81 (20.6)	0.88 (22.4)
5/16	8	1/8	-TFT-AN5-NS2	1.08 (27.4)	0.24 (6.0)	0.56 (14.3)	0.66 (16.8)
5/16	8	1/4	-TFT-AN5-NS4	1.22 (30.9)	0.24 (6.0)	0.81 (20.6)	0.88 (22.4)
3/8	10	1/8	-TFT-AN6-NS2	1.06 (26.9)	0.30 (7.5)	0.63 (15.9)	0.66 (16.8)
3/8	10	1/4	-TFT-AN6-NS4	1.23 (31.2)	0.30 (7.5)	0.81 (20.6)	0.88 (22.4)
3/8	10	3/8	-TFT-AN6-NS6	1.31 (33.2)	0.30 (7.5)	0.94 (23.8)	1.02 (25.9)
1/2	12	1/4	-TFT-AN8-NS4	1.24 (31.6)	0.39 (9.9)	0.81 (20.6)	0.88 (22.4)
1/2	12	3/8	-TFT-AN8-NS6	1.42 (36.1)	0.39 (9.9)	0.94 (23.8)	1.02 (25.9)
1/2	12	1/2	-TFT-AN8-NS8	1.42 (36.1)	0.39 (9.9)	1.06 (27.0)	1.23 (31.2)
5/8	16	1/2	-TFT-AN10-NS8	1.64 (41.7)	0.48 (12.3)	1.06 (27.0)	1.23 (31.2)
3/4	18	1/2	-TFT-AN12-NS8	1.66 (42.1)	0.61 (15.5)	1.25 (31.8)	1.23 (31.2)
3/4	18	3/4	-TFT-AN12-NS12	1.89 (48.0)	0.61 (15.5)	1.37 (34.9)	1.36 (34.5)
7/8	22	3/4	-TFT-AN14-NS12	1.86 (47.2)	0.72 (18.3)	1.37 (34.9)	1.42 (36.1)
1	25	1	-TFT-AN16-NS16	2.17 (55.1)	0.85 (21.5)	1.69 (42.9)	1.62 (41.1)
1 1/4	32	1 1/4	-TFT-AN20-NS20	2.33 (59.2)	1.08 (27.5)	2.00 (50.8)	1.70 (43.2)

Union Tees

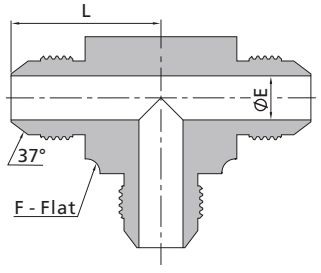

SAE 070401

Tube O.D.		Basic Ordering Number	Dimensions, in. (mm)		
in.	mm		L	E	F
1/8	3	-TTT-AN2	0.77 (19.6)	0.06 (1.6)	0.44 (11.1)
3/16	4	-TTT-AN3	0.83 (21.1)	0.13 (3.2)	0.44 (11.1)
1/4	6	-TTT-AN4	0.89 (22.6)	0.17 (4.4)	0.50 (12.7)
5/16	8	-TTT-AN5	0.95 (24.1)	0.24 (6.0)	0.56 (14.3)
3/8	10	-TTT-AN6	1.06 (26.9)	0.30 (7.5)	0.56 (14.3)
1/2	12	-TTT-AN8	1.25 (31.8)	0.39 (9.9)	0.81 (20.6)
5/8	16	-TTT-AN10	1.45 (36.8)	0.48 (12.3)	0.81 (20.6)
3/4	18	-TTT-AN12	1.66 (42.2)	0.61 (15.5)	1.06 (27.0)
7/8	22	-TTT-AN14	1.80 (45.7)	0.72 (18.3)	1.25 (31.8)
1	25	-TTT-AN16	1.81 (46.0)	0.85 (21.5)	1.37 (34.9)
1 1/4	32	-TTT-AN20	2.06 (52.3)	1.08 (27.5)	1.69 (42.9)
1 1/2	38	-TTT-AN24	2.33 (59.2)	1.30 (33.0)	2.00 (50.8)

Rotatable Run Tees

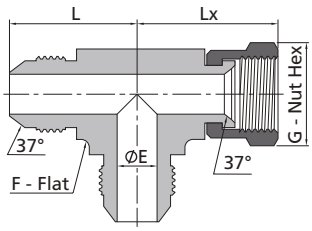

SAE 070432

Tube O.D.		Basic Ordering Number	Dimensions, in. (mm)				
in.	mm		L	E	F	Lx	G
1/8	3	-TTT-AN2-AS2-AN2	0.77 (19.6)	0.06 (1.6)	0.44 (11.1)	0.97 (24.6)	0.44 (11.1)
3/16	4	-TTT-AN3-AS3-AN3	0.83 (21.1)	0.13 (3.2)	0.44 (11.1)	1.00 (25.4)	0.50 (12.7)
1/4	6	-TTT-AN4-AS4-AN4	0.89 (22.6)	0.17 (4.4)	0.50 (12.7)	1.00 (25.4)	0.56 (14.3)
5/16	8	-TTT-AN5-AS5-AN5	0.95 (24.1)	0.24 (6.0)	0.56 (14.3)	1.06 (26.9)	0.63 (15.9)
3/8	10	-TTT-AN6-AS6-AN6	1.06 (26.9)	0.30 (7.5)	0.56 (14.3)	1.25 (31.8)	0.69 (17.5)
1/2	12	-TTT-AN8-AS8-AN8	1.25 (31.8)	0.39 (9.9)	0.81 (20.6)	1.38 (35.1)	0.87 (22.2)
5/8	16	-TTT-AN10-AS10-AN10	1.45 (36.8)	0.48 (12.3)	0.81 (20.6)	1.62 (41.1)	1.00 (25.4)
3/4	18	-TTT-AN12-AS12-AN12	1.66 (42.2)	0.61 (15.5)	1.06 (27.0)	1.75 (44.4)	1.25 (31.8)
7/8	22	-TTT-AN14-AS14-AN14	1.80 (45.7)	0.72 (18.3)	1.25 (31.8)	1.78 (45.2)	1.37 (34.9)
1	25	-TTT-AN16-AS16-AN16	1.81 (46.0)	0.85 (21.5)	1.37 (34.9)	2.00 (50.8)	1.50 (38.1)
1 1/4	32	-TTT-AN20-AS20-AN20	2.06 (52.3)	1.08 (27.5)	1.69 (42.9)	2.31 (58.7)	2.00 (50.8)
1 1/2	38	-TTT-AN24-AS24-AN24	2.33 (59.2)	1.30 (33.0)	2.00 (50.8)	2.59 (65.8)	2.37 (60.3)

Rotatable Branch Tees

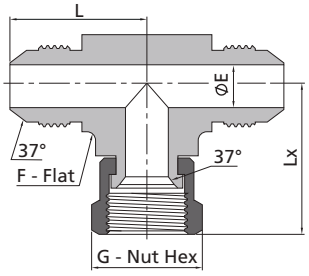

SAE 070433

Tube O.D.		Basic Ordering Number	Dimensions, in. (mm)				
in.	mm		L	E	F	Lx	G
1/8	3	-TTT-AN2-AN2-AS2	0.77 (19.6)	0.06 (1.6)	0.44 (11.1)	0.97 (24.6)	0.44 (11.1)
3/16	4	-TTT-AN3-AN3-AS3	0.83 (21.1)	0.13 (3.2)	0.44 (11.1)	1.00 (25.4)	0.50 (12.7)
1/4	6	-TTT-AN4-AN4-AS4	0.89 (22.6)	0.17 (4.4)	0.50 (12.7)	1.00 (25.4)	0.56 (14.3)
5/16	8	-TTT-AN5-AN5-AS5	0.95 (24.1)	0.24 (6.0)	0.56 (14.3)	1.06 (26.9)	0.63 (15.9)
3/8	10	-TTT-AN6-AN6-AS6	1.06 (26.9)	0.30 (7.5)	0.56 (14.3)	1.25 (31.8)	0.69 (17.5)
1/2	12	-TTT-AN8-AN8-AS8	1.25 (31.8)	0.39 (9.9)	0.81 (20.6)	1.38 (35.1)	0.87 (22.2)
5/8	16	-TTT-AN10-AN10-AS10	1.45 (36.8)	0.48 (12.3)	0.81 (20.6)	1.62 (41.1)	1.00 (25.4)
3/4	18	-TTT-AN12-AN12-AS12	1.66 (42.2)	0.61 (15.5)	1.06 (27.0)	1.75 (44.4)	1.25 (31.8)
7/8	22	-TTT-AN14-AN14-AS14	1.80 (45.7)	0.72 (18.3)	1.25 (31.8)	1.78 (45.2)	1.37 (34.9)
1	25	-TTT-AN16-AN16-AS16	1.81 (46.0)	0.85 (21.5)	1.37 (34.9)	2.00 (50.8)	1.50 (38.1)
1 1/4	32	-TTT-AN20-AN20-AS20	2.06 (52.3)	1.08 (27.5)	1.69 (42.9)	2.31 (58.7)	2.00 (50.8)
1 1/2	38	-TTT-AN24-AN24-AS24	2.33 (59.2)	1.30 (33.0)	2.00 (50.8)	2.59 (65.8)	2.37 (60.3)

Union Crosses

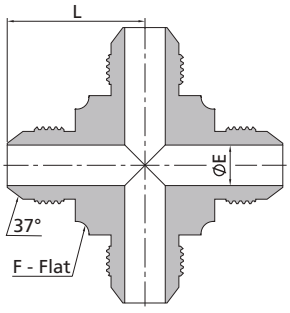

SAE 070501

Tube O.D.		Basic Ordering Number	Dimensions, in. (mm)		
in.	mm		L	E	F
1/8	3	-C-AN2	0.77 (19.6)	0.06 (1.6)	0.44 (11.1)
3/16	4	-C-AN3	0.83 (21.1)	0.13 (3.2)	0.44 (11.1)
1/4	6	-C-AN4	0.89 (22.6)	0.17 (4.4)	0.50 (12.7)
5/16	8	-C-AN5	0.95 (24.1)	0.24 (6.0)	0.56 (14.3)
3/8	10	-C-AN6	1.06 (26.9)	0.30 (7.5)	0.56 (14.3)
1/2	12	-C-AN8	1.25 (31.8)	0.39 (9.9)	0.81 (20.6)
5/8	16	-C-AN10	1.45 (36.8)	0.48 (12.3)	0.81 (20.6)
3/4	18	-C-AN12	1.78 (45.2)	0.61 (15.5)	1.25 (31.8)
7/8	22	-C-AN14	1.80 (45.7)	0.72 (18.3)	1.25 (31.8)
1	25	-C-AN16	2.02 (51.2)	0.85 (21.5)	1.69 (42.9)
1 1/4	32	-C-AN20	2.06 (52.3)	1.08 (27.5)	1.69 (42.9)

VL Series Vacuum Tube Fittings



Contents

Unions - U 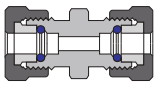 A-112

Reducing Unions - U 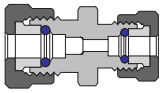 A-113

Tube Fitting Unions - U 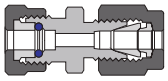 A-113

Union Elbows - LU 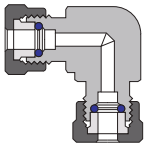 A-113

Union Tees - TTT 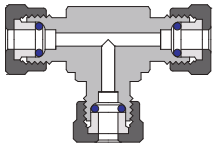 A-113

Male Connectors - CM 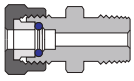 A-113

Adapters - CW 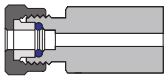 A-114

Nuts - N  A-114

O-Rings - VI7  A-114

VL Series

Features

◎ Stainless steel construction, fluorocarbon FKM O-ring
◎ Available in tube sizes from 1/16" to 11/2"
◎ Working temperature: -25°F to 400°F (-31°C to 204°C)
◎ Knurled nut for easy, finger-tight assembly
◎ Reliable, repeatable sealing performance

Testing

◎ The VL vacuum fitting design has been helium leak tested to a maximum leak rate of 4×10^{-9} std cm^3/s at ambient temperature.
◎ The leak rate increases as temperature increases due to permeation through the O-ring.

Cleaning and Packaging

◎ VL vacuum fittings meet the requirements of FITOK Standard Cleaning and Packaging.
◎ VL vacuum fittings are cleaned to remove machine oil, grease and loose particles.

Ordering Information

◎ The E dimension refers to the smallest nominal inside diameter of the part.
◎ To order straight fittings bored through, insert **T** to the ordering number.
Example: SS-**T**U-VL6
SS-**T**CM-VL8

Dimensions

Dimensions are for reference only and are subject to change.

Unions

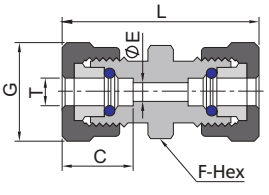

T-Tube O.D. (in.)	Ordering Number	Dimensions, in. (mm)				
		L	C	E	G	F
1/16	SS-U-VL1	1.23 (31.2)	0.43 (10.9)	0.05 (1.3)	3/8	3/8 (9.5)
1/8	SS-U-VL2	1.40 (35.6)	0.43 (10.9)	0.09 (2.3)	9/16	1/2 (12.7)
1/4	SS-U-VL4	1.63 (41.4)	0.62 (15.7)	0.18 (4.6)	11/16	5/8 (15.9)
3/8	SS-U-VL6	1.81 (46.0)	0.66 (16.8)	0.28 (7.1)	13/16	3/4 (19.1)
1/2	SS-U-VL8	1.84 (46.7)	0.80 (20.3)	0.40 (10.2)	15/16	7/8 (22.2)
5/8	SS-U-VL10	1.84 (46.7)	0.84 (21.3)	0.50 (12.7)	1 1/8	1 1/16 (27.0)
3/4	SS-U-VL12	2.05 (52.1)	0.94 (23.9)	0.62 (15.7)	1 1/4	1 3/16 (30.1)
1	SS-U-VL16	2.15 (54.6)	0.94 (23.9)	0.87 (22.1)	1 9/16	1 1/2 (38.1)
1 1/2	SS-U-VL24	2.27 (57.6)	0.94 (23.9)	1.38 (35.1)	2 1/16	2 1/8 (54.0)

Reducing Unions

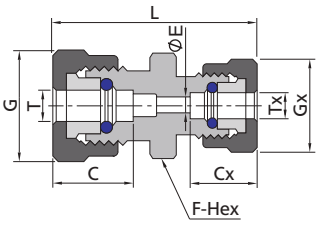

T-Tube O.D. (in.)	Tx-Tube O.D. (in.)	Ordering Number	Dimensions, in. (mm)						
			L	C	Cx	E	G	Gx	F
3/8	1/4	SS-U-VL6-VL4	1.72 (43.7)	0.66 (16.8)	0.62 (15.7)	0.18 (4.6)	13/16	11/16	3/4 (19.1)
1/2	1/4	SS-U-VL8-VL4	1.75 (44.4)	0.80 (20.3)	0.62 (15.7)	0.18 (4.6)	15/16	11/16	7/8 (22.2)

Tube Fitting Unions

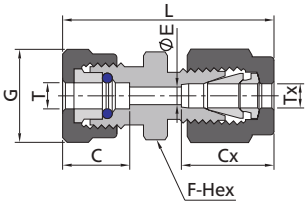

T-Tube O.D. (in.)	Tx-Tube O.D. (in.)	Ordering Number	Dimensions, in. (mm)					
			L	C	Cx	E	G	F
1/4	1/4	SS-U-VL4-FL4	1.66 (42.2)	0.62 (15.7)	0.60 (15.2)	0.18 (4.6)	11/16	5/8 (15.9)
3/8	3/8	SS-U-VL6-FL6	1.81 (46.0)	0.66 (16.8)	0.66 (16.8)	0.28 (7.1)	13/16	3/4 (19.1)
1/2	1/2	SS-U-VL8-FL8	1.95 (49.5)	0.80 (20.3)	0.90 (22.9)	0.40 (10.2)	15/16	7/8 (22.2)

Union Elbows

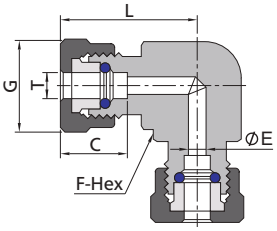

T-Tube O.D. (in.)	Ordering Number	Dimensions, in. (mm)				
		L	C	E	G	F
1/4	SS-LU-VL4	1.14 (29.0)	0.62 (15.7)	0.18 (4.6)	11/16	1/2 (12.7)
3/8	SS-LU-VL6	1.36 (34.5)	0.66 (16.8)	0.28 (7.1)	13/16	11/16 (17.5)
1/2	SS-LU-VL8	1.36 (34.5)	0.80 (20.3)	0.40 (10.2)	15/16	13/16 (20.6)

Union Tees

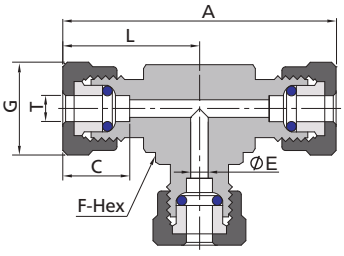

T-Tube O.D. (in.)	Ordering Number	Dimensions, in. (mm)					
		A	L	C	E	G	F
1/8	SS-TTT-VL2	2.12 (53.8)	1.06 (26.9)	0.43 (10.9)	0.09 (2.3)	9/16	1/2 (12.7)
1/4	SS-TTT-VL4	2.30 (58.4)	1.15 (29.2)	0.62 (15.7)	0.18 (4.6)	11/16	1/2 (12.7)
3/8	SS-TTT-VL6	2.72 (69.1)	1.36 (34.5)	0.66 (16.8)	0.28 (7.1)	13/16	11/16 (17.5)
1/2	SS-TTT-VL8	2.72 (69.1)	1.36 (34.5)	0.80 (20.3)	0.40 (10.2)	15/16	11/16 (17.5)
3/4	SS-TTT-VL12	3.30 (83.8)	1.65 (41.9)	0.94 (23.9)	0.62 (15.7)	1 1/4	15/16 (23.8)
1	SS-TTT-VL16	3.64 (92.4)	1.82 (46.2)	0.94 (23.9)	0.87 (22.1)	1 9/16	1 1/4 (31.8)

Male Connectors

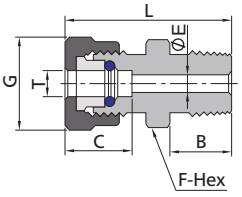

Tube O.D. (in.)	NPT Size in.	Ordering Number	Dimensions, in. (mm)					
			L	C	B	E	G	F
1/16	1/8	SS-CM-VL1-NS2	1.12 (28.4)	0.43 (10.9)	0.38 (9.6)	0.05 (1.3)	3/8	7/16 (11.1)
1/8	1/8	SS-CM-VL2-NS2	1.22 (31.0)	0.43 (10.9)	0.38 (9.6)	0.09 (2.3)	9/16	1/2 (12.7)
1/4	1/8	SS-CM-VL4-NS2	1.35 (34.3)	0.62 (15.7)	0.38 (9.6)	0.18 (4.6)	11/16	5/8 (15.9)
1/4	1/4	SS-CM-VL4-NS4	1.53 (38.9)	0.62 (15.7)	0.56 (14.2)	0.18 (4.6)	11/16	5/8 (15.9)
3/8	1/8	SS-CM-VL6-NS2	1.44 (36.6)	0.66 (16.8)	0.38 (9.6)	0.18 (4.6)	13/16	3/4 (19.1)
3/8	1/4	SS-CM-VL6-NS4	1.62 (41.1)	0.66 (16.8)	0.56 (14.2)	0.28 (7.1)	13/16	3/4 (19.1)
1/2	3/8	SS-CM-VL8-NS6	1.65 (41.9)	0.80 (20.3)	0.56 (14.2)	0.40 (10.2)	15/16	7/8 (22.2)
1/2	1/2	SS-CM-VL8-NS8	1.84 (46.7)	0.80 (20.3)	0.75 (19.1)	0.40 (10.2)	15/16	7/8 (22.2)
3/4	3/4	SS-CM-VL12-NS12	1.96 (49.8)	0.94 (23.9)	0.75 (19.1)	0.62 (15.7)	1 1/4	1 3/16 (30.1)
1	1	SS-CM-VL16-NS16	2.25 (57.2)	0.94 (23.9)	0.94 (23.9)	0.87 (22.1)	1 9/16	1 1/2(38.1)

Adapters

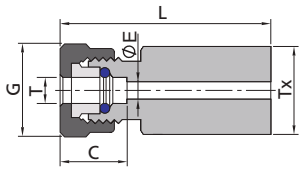

T-Tube O.D. (in.)	Tx-Tube O.D. (in.)	Ordering Number	Dimensions, in. (mm)			
			L	C	E	G
1/16	1/4	SS-CW-VL1-A4	1.12 (28.4)	0.43 (10.9)	0.05 (1.3)	3/8
1/8	1/4	SS-CW-VL2-A4	1.20 (30.5)	0.43 (10.9)	0.09 (2.3)	9/16
1/8	3/8	SS-CW-VL2-A6	1.21 (30.7)	0.43 (10.9)	0.09 (2.3)	9/16
1/4	1/4	SS-CW-VL4-A4	1.34 (34.0)	0.62 (15.7)	0.18 (4.6)	11/16
1/4	3/8	SS-CW-VL4-A6	1.33 (33.8)	0.62 (15.7)	0.18 (4.6)	11/16
1/4	1/2	SS-CW-VL4-A8	1.47 (37.3)	0.62 (15.7)	0.18 (4.6)	11/16
3/8	3/8	SS-CW-VL6-A6	1.47 (37.3)	0.66 (16.8)	0.28 (7.1)	13/16
3/8	1/2	SS-CW-VL6-A8	1.58 (40.1)	0.66 (16.8)	0.28 (7.1)	13/16
1/2	5/8	SS-CW-VL8-A10	1.64 (41.7)	0.80 (20.3)	0.40 (10.2)	15/16
1/2	3/4	SS-CW-VL8-A12	1.69 (42.9)	0.80 (20.3)	0.40 (10.2)	15/16
3/4	1	SS-CW-VL12-A16	1.78 (45.2)	0.94 (23.9)	0.62 (15.7)	1 1/4
1	1 1/4	SS-CW-VL16-A20	1.80 (45.7)	0.94 (23.9)	0.87 (22.1)	1 9/16
1 1/2	1 1/2	SS-CW-VL24-A24	1.98 (50.3)	0.94 (23.9)	1.25 (31.8)	2 1/16

Nuts

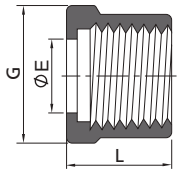

T-Tube O.D. (in.)	Ordering Number	Thread Size	Dimensions,in. (mm)		
			L	E	G
1/16	SS-N-VL1	1/4-20 UNC	0.38 (9.60)	0.07 (1.80)	3/8
1/8	SS-N-VL2	3/8-20 UN	0.41 (10.4)	0.13 (3.30)	9/16
1/4	SS-N-VL4	1/2-20 UNF	0.53 (13.5)	0.26 (6.60)	11/16
3/8	SS-N-VL6	5/8-20 UN	0.62 (15.7)	0.38 (9.60)	13/16
1/2	SS-N-VL8	3/4-20 UNEF	0.62 (15.7)	0.51 (13.0)	15/16
5/8	SS-N-VL10	15/16-20 UNEF	0.62 (15.7)	0.63 (16.0)	1 1/8
3/4	SS-N-VL12	1 1/16-20 UN	0.72 (18.3)	0.76 (19.3)	1 1/4
1	SS-N-VL16	1 3/8-20 UN	0.72 (18.3)	1.01 (25.6)	1 9/16
1 1/2	SS-N-VL24	1 7/8-20 UN	0.72 (18.3)	1.51 (38.4)	2 1/16

O-rings



T-Tube O.D. (in.)	Ordering Number	Material
1/16	VI7-1.8×1	70 durometer fluorocarbon FKM
1/8	VI7-006	
1/4	VI7-010	
3/8	VI7-012	
1/2	VI7-014	
5/8	VI7-114	
3/4	VI7-116	
1	VI7-120	
1 1/2	VI7-128	

Pipe Fittings, Weld Fittings

6P Series Pipe Fittings  A-116

6W Series Weld Fittings  A-150

6P Series Pipe Fittings



Contents

Hex Nipples - PHN
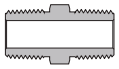
A-119

Hex Long Nipples - PLN
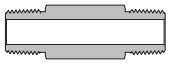
A-123

Close Nipples - PCN
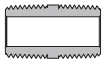
A-124

Special Pipe Nipples - PSN
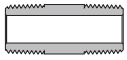
A-124

Adapters - PA

A-125

Reducing Bushings - PRB

A-128

Hex Couplings - PCG

A-131

Union Ball Joints - UBJ

A-132

Male Elbows - PME

A-132

Street Elbows - PSE

A-133

45° Street Elbows - PSV
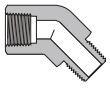
A-135

Female Elbows - PE

A-137

45° Female Elbows - PVE
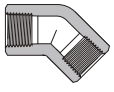
A-138

Male Tees - PMT
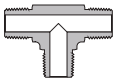
A-139

Female Branch Tees - PTB
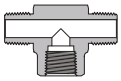
A-140

Female Run Tees - PTR
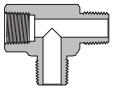
A-140

Male Street Tees - PST
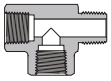
A-141

Male Branch Tees - PBT

A-142

Female Tees - PT
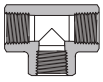
A-143

Female Crosses - PCR
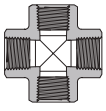
A-144

Pipe to Pipe Unions - PUP

A-144

Hand Tight Adapter Fittings - HF
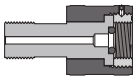
A-145

Pipe Plugs - PP

A-146

Hollow Hex Plugs - PI

A-147

Pipe Caps - PC

A-148

Ordering Number Description A-149

Features

◎ The hardened threads with smooth surface finishing avoid galling and help to extend the fitting service life
◎ Radius junction design for elbows provides smooth flow path
◎ Every fitting is marked with size, material and heat number

Technical Data

◎ Sizes range from 1/16 to 2
◎ Thread Specifications:

Thread Type	Specification
NPT	ASME B1.20.1, SAE AS71051
ISO Tapered	IS0 7-1, BS 21, JIS B0203
ISO Parallel	IS0 228, JIS B0202
SAE/MS	ASME B1.1, SAE J475
Metric	ISO 261

◎ Working Temperature:
For the working temperatures of FITOK pipe fittings, please see A-10.
◎ Working Pressure:
1. Catalog working pressures shown are based on ANSI/ASME B31.3 at ambient temperature, to determine working pressures in accordance with ANSI/ASME B31.1 multiply catalog working pressures shown by the factor from the table below.

Material	Factor
Stainless steel	0.94
Carbon steel	0.85
Brass	1.0

2. Use the allowable working pressure at ambient temperature to multiply the elevated temperature factors to get the working pressure at elevated temperature. To know the elevated temperature factor, please see F-14.
3. For technical information of NPT thread and ISO tapered thread, please see page A-06 and A-07.

Materials

Material	Bar Stock	Forging	Designator
316 stainless steel	ASTM A276, ASME SA479, EN 1.4401	ASTM A182, ASME SA182, EN 1.4401	SS
304 stainless steel	ASTM A276, ASME SA479, EN 1.4301	ASTM A182, ASME SA182, EN 1.4301	S4
Alloy 400	ASTM B164, ASME SB164	ASTM B564 ASME SB564	M
Alloy 600	ASTM B166, ASME SB166	ASTM B564, ASME SB564	INC
Alloy C-276	ASTM B574	ASTM B564,	HC
Brass	ASME B16/ASTM B453	ASTM B283	B
Carbon steel	ASTM A108	ASTM A105	CS
904L stainless steel	ASTM B649	ASTM A182	904L

Cautions

◎ Do not loosen or tighten fittings when system is pressurized.
◎ Always use proper thread sealants on tapered pipe threads. FITOK PTFE thread seal tapes are available.
For more details, see Page A-90 of the **6D Series Tube Fittings** catalog.
◎ To ensure an effective sealing of the system, choose the suitable sealing type for parallel threads.

Dimensions

Hex Nipples

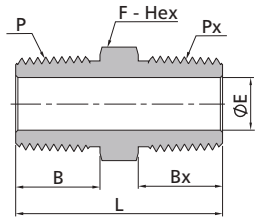

Male NPT Threads

P-NPT Size	Px-NPT Size	Basic Ordering Number	Dimensions, in. (mm)					Working Pressure psig (bar)	
			L	F	B	Bx	E	316 SS, Steel	Brass
1/16	1/16	-PHN-NS1	1.01 (25.6)	0.31 (7.9)	0.38 (9.7)	0.38 (9.7)	0.12 (3.0)	11000 (757)	5500 (378)
1/8	1/16	-PHN-NS2-NS1	1.01 (25.6)	0.44 (11.1)	0.38 (9.7)	0.38 (9.7)	0.12 (3.0)	11000 (757)	5500 (378)
1/8	1/8	-PHN-NS2	1.01 (25.6)	0.44 (11.1)	0.38 (9.7)	0.38 (9.7)	0.19 (4.8)	10000 (690)	5000 (344)
1/4	1/16	-PHN-NS4-NS1	1.22 (31.0)	0.56 (14.3)	0.56 (14.2)	0.38 (9.7)	0.12 (3.0)	9500 (655)	4700 (324)
1/4	1/8	-PHN-NS4-NS2	1.22 (31.0)	0.56 (14.3)	0.56 (14.2)	0.38 (9.7)	0.19 (4.8)	9500 (655)	4700 (324)
1/4	1/4	-PHN-NS4	1.40 (35.6)	0.56 (14.3)	0.56 (14.2)	0.56 (14.2)	0.28 (7.1)	8000 (551)	4000 (275)
3/8	1/16	-PHN-NS6-NS1	1.25 (31.8)	0.69 (17.5)	0.56 (14.2)	0.38 (9.7)	0.12 (3.0)	7800 (537)	3900 (268)
3/8	1/8	-PHN-NS6-NS2	1.25 (31.8)	0.69 (17.5)	0.56 (14.2)	0.38 (9.7)	0.19 (4.8)	7800 (537)	3900 (268)
3/8	1/4	-PHN-NS6-NS4	1.43 (36.3)	0.69 (17.5)	0.56 (14.2)	0.56 (14.2)	0.28 (7.1)	8000 (551)	4000 (275)
3/8	3/8	-PHN-NS6	1.43 (36.3)	0.69 (17.5)	0.56 (14.2)	0.56 (14.2)	0.38 (9.7)	7800 (537)	3900 (268)
1/2	1/8	-PHN-NS8-NS2	1.47 (37.3)	0.87 (22.2)	0.75 (19.1)	0.38 (9.7)	0.19 (4.8)	7700 (530)	3800 (261)
1/2	1/4	-PHN-NS8-NS4	1.65 (41.9)	0.87 (22.2)	0.75 (19.1)	0.56 (14.2)	0.28 (7.1)	8000 (551)	4000 (275)
1/2	3/8	-PHN-NS8-NS6	1.65 (41.9)	0.87 (22.2)	0.75 (19.1)	0.56 (14.2)	0.38 (9.7)	7800 (537)	3900 (268)
1/2	1/2	-PHN-NS8	1.84 (46.7)	0.87 (22.2)	0.75 (19.1)	0.75 (19.1)	0.47 (11.9)	7700 (530)	3800 (261)
3/4	1/8	-PHN-NS12-NS2	1.59 (40.4)	1.06 (27.0)	0.75 (19.1)	0.38 (9.7)	0.19 (4.8)	7300 (502)	3600 (248)
3/4	1/4	-PHN-NS12-NS4	1.65 (41.9)	1.06 (27.0)	0.75 (19.1)	0.56 (14.2)	0.28 (7.1)	8000 (551)	4000 (275)
3/4	3/8	-PHN-NS12-NS6	1.78 (45.2)	1.06 (27.0)	0.75 (19.1)	0.56 (14.2)	0.38 (9.7)	7800 (537)	3900 (268)
3/4	1/2	-PHN-NS12-NS8	1.84 (46.7)	1.06 (27.0)	0.75 (19.1)	0.75 (19.1)	0.47 (11.9)	7700 (530)	3800 (261)
3/4	3/4	-PHN-NS12	1.84 (46.7)	1.06 (27.0)	0.75 (19.1)	0.75 (19.1)	0.62 (15.7)	7300 (502)	3600 (248)
1	1/8	-PHN-NS16-NS2	1.78 (45.2)	1.37 (34.9)	0.94 (23.9)	0.38 (9.7)	0.19 (4.8)	6500 (448)	3300 (227)
1	1/4	-PHN-NS16-NS4	1.94 (49.3)	1.37 (34.9)	0.94 (23.9)	0.56 (14.2)	0.28 (7.1)	5300 (365)	2600 (179)
1	3/8	-PHN-NS16-NS6	1.97 (50.0)	1.37 (34.9)	0.94 (23.9)	0.56 (14.2)	0.38 (9.7)	6500 (448)	3300 (227)
1	1/2	-PHN-NS16-NS8	2.13 (54.1)	1.37 (34.9)	0.94 (23.9)	0.75 (19.1)	0.47 (11.9)	6500 (448)	3300 (227)
1	3/4	-PHN-NS16-NS12	2.13 (54.1)	1.37 (34.9)	0.94 (23.9)	0.75 (19.1)	0.62 (15.7)	6500 (448)	3300 (227)
1	1	-PHN-NS16	2.32 (58.9)	1.37 (34.9)	0.94 (23.9)	0.94 (23.9)	0.88 (22.4)	5300 (365)	2600 (179)
1 1/4	1	-PHN-NS20-NS16	2.45 (62.2)	1.75 (44.5)	0.94 (23.9)	0.94 (23.9)	0.88 (22.4)	5300 (365)	2600 (179)
1 1/4	1 1/4	-PHN-NS20	2.48 (62.9)	1.75 (44.5)	0.94 (23.9)	0.94 (23.9)	1.13 (28.6)	6000 (410)	3000 (200)
1 1/2	1 1/2	-PHN-NS24	2.61 (66.3)	2.00 (50.8)	1.03 (26.2)	1.03 (26.2)	1.34 (34.0)	5000 (344)	2500 (172)
2	2	-PHN-NS32	3.06 (77.7)	2.50 (63.5)	1.06 (26.9)	1.06 (26.9)	1.77 (45.0)	3900 (268)	1900 (130)

Male ISO Tapered Threads

P-RT Size	Px-RT Size	Basic Ordering Number	Dimensions, in. (mm)					Working Pressure psig (bar)	
			L	F	B	Bx	E	316 SS, Steel	Brass
1/8	1/8	-PHN-RT2	1.01 (25.6)	0.44 (11.1)	0.38 (9.7)	0.38 (9.7)	0.19 (4.8)	10000 (690)	5000 (344)
1/4	1/4	-PHN-RT4	1.40 (35.6)	0.56 (14.3)	0.56 (14.2)	0.56 (14.2)	0.28 (7.1)	8000 (551)	4000 (275)
3/8	3/8	-PHN-RT6	1.43 (36.3)	0.69 (17.5)	0.56 (14.2)	0.56 (14.2)	0.38 (9.7)	7800 (537)	3900 (268)
1/2	1/2	-PHN-RT8	1.84 (46.7)	0.87 (22.2)	0.75 (19.1)	0.75 (19.1)	0.47 (11.9)	7700 (530)	3800 (261)
3/4	3/4	-PHN-RT12	1.84 (46.7)	1.06 (27.0)	0.75 (19.1)	0.75 (19.1)	0.62 (15.7)	7300 (502)	3600 (248)
1	1	-PHN-RT16	2.32 (58.9)	1.37 (34.9)	0.94 (23.9)	0.94 (23.9)	0.88 (22.4)	5300 (365)	2600 (179)

Hex Nipples

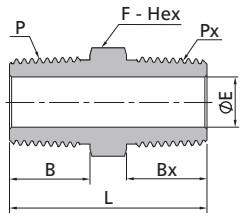

Male NPT Threads								Male ISO Tapered Threads	
P-NPT Size	Px-RT Size	Basic Ordering Number	Dimensions, in. (mm)					Working Pressure psig (bar)	
			L	F	B	Bx	E	316 SS, Steel	Brass
1/8	1/8	-PHN-NS2-RT2	1.01 (25.6)	0.44 (11.1)	0.38 (9.7)	0.38 (9.7)	0.19 (4.8)	10000 (690)	5000 (344)
1/4	1/4	-PHN-NS4-RT4	1.40 (35.6)	0.56 (14.3)	0.56 (14.2)	0.56 (14.2)	0.28 (7.1)	8000 (551)	4000 (275)
3/8	3/8	-PHN-NS6-RT6	1.43 (36.3)	0.69 (17.5)	0.56 (14.2)	0.56 (14.2)	0.38 (9.7)	7800 (537)	3900 (268)
1/2	1/2	-PHN-NS8-RT8	1.84 (46.7)	0.87 (22.2)	0.75 (19.1)	0.75 (19.1)	0.47 (11.9)	7700 (530)	3800 (261)
3/4	3/4	-PHN-NS12-RT12	1.84 (46.7)	1.06 (27.0)	0.75 (19.1)	0.75 (19.1)	0.62 (15.7)	7300 (502)	3600 (248)
1	1	-PHN-NS16-RT16	2.32 (58.9)	1.37 (34.9)	0.94 (23.9)	0.94 (23.9)	0.88 (22.4)	5300 (365)	2600 (179)

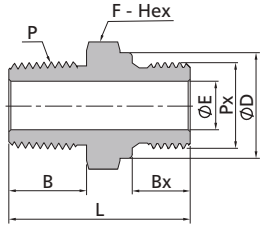

Male NPT Threads									Male ISO parallel Threads	
P-NPT Size	Px-RS Size	Basic Ordering Number	Dimensions, in. (mm)						Working Pressure psig (bar)	
			L	F	B	Bx	E	D	316 SS, Steel	Brass
1/8	1/8	-PHN-NS2-RS2	1.09 (27.7)	0.56 (14.3)	0.38 (9.7)	0.28 (7.1)	0.16 (4.1)	0.54 (13.7)	9600 (662)	4800 (331)
1/4	1/4	-PHN-NS4-RS4	1.45 (36.8)	0.75 (19.1)	0.56 (14.2)	0.44 (11.2)	0.23 (5.8)	0.71 (18.0)	10300 (709)	5100 (351)
3/8	3/8	-PHN-NS6-RS6	1.48 (37.6)	0.87 (22.2)	0.56 (14.2)	0.44 (11.2)	0.31 (7.9)	0.85 (21.6)	7800 (537)	3900 (268)
1/2	1/2	-PHN-NS8-RS8	1.75 (44.4)	1.06 (27.0)	0.75 (19.1)	0.56 (14.2)	0.47 (11.9)	1.02 (25.9)	7600 (523)	3800 (261)
3/4	3/4	-PHN-NS12-RS12	1.93 (49.0)	1.31 (33.3)	0.75 (19.1)	0.62 (15.7)	0.62 (15.7)	1.26 (32.0)	7300 (502)	3600 (248)
1	1	-PHN-NS16-RS16	2.23 (56.6)	1.63 (41.3)	0.94 (23.9)	0.72 (18.3)	0.78 (19.8)	1.53 (38.9)	7400 (509)	3700 (254)

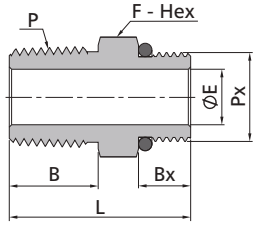

Male NPT Threads										Male SAE/MS Straight Threads (ST)
P-NPT Size	Px-SAE Nominal Size	Px-SAE/MS Thread Specification	Basic Ordering Number	Dimensions, in. (mm)					Working Pressure psig (bar)	
				L	F	B	Bx	E	316 SS, Steel	
1/4	4	7/16-20	-PHN-NS4-ST7	1.20 (30.5)	0.56 (14.3)	0.56 (14.2)	0.36 (9.1)	0.20 (5.1)	4500 (310)	
3/8	6	9/16-18	-PHN-NS6-ST9	1.26 (32.0)	0.69 (17.5)	0.56 (14.2)	0.36 (9.1)	0.28 (7.1)	4500 (310)	
1/2	8	3/4-16	-PHN-NS8-ST12	1.53 (38.9)	0.87 (22.2)	0.75 (19.1)	0.44 (11.2)	0.42 (10.7)	4500 (310)	
3/4	12	1 1/16-12	-PHN-NS12-ST17	1.75 (44.4)	1.25 (31.8)	0.75 (19.1)	0.59 (15.0)	0.62 (15.7)	3600 (248)	
1	16	1 5/16-12	-PHN-NS16-ST21	2.00 (50.8)	1.50 (38.1)	0.94 (23.9)	0.59 (15.0)	0.88 (22.4)	2900 (199)	

Hex Nipples

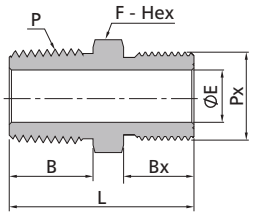

Male NPT Threads								Male Metric Threads
P-NPT Size	Px-Metric Size	Basic Ordering Number	Dimensions, mm (in.)					Working Pressure psig (bar) 316 SS, Steel
			L	F	B	Bx	E	
1/8	M20 x 1.5	-PHN-NS2-MS20	32.7 (1.29)	22.2 (0.87)	9.7 (0.38)	16.0 (0.63)	5.0 (0.20)	7700 (530)
1/4	M8 x 1	-PHN-NS4-MS8	29.0 (1.14)	14.3 (0.56)	14.2 (0.56)	9.0 (0.35)	3.2 (0.13)	8000 (551)
1/4	M14 x 1.5	-PHN-NS4-MS14	34.2 (1.35)	15.9 (0.63)	14.2 (0.56)	13.0 (0.51)	7.0 (0.28)	8000 (551)
1/4	M16 x 1.5	-PHN-NS4-MS16	35.2 (1.39)	17.5 (0.69)	14.2 (0.56)	14.0 (0.55)	7.1 (0.28)	7800 (537)
1/4	M20 x 1.5	-PHN-NS4-MS20	37.2 (1.46)	22.2 (0.87)	14.2 (0.56)	16.0 (0.63)	7.1 (0.28)	7700 (530)
3/8	M14 x 1.5	-PHN-NS6-MS14	34.2 (1.35)	17.5 (0.69)	14.2 (0.56)	13.0 (0.51)	7.0 (0.28)	7800 (537)
3/8	M20 x 1.5	-PHN-NS6-MS20	37.2 (1.46)	22.2 (0.87)	14.2 (0.56)	16.0 (0.63)	9.5 (0.37)	7700 (530)
3/8	M24 x 1.5	-PHN-NS6-MS24	38.2 (1.50)	25.4 (1.00)	14.2 (0.56)	17.0 (0.67)	9.5 (0.37)	7400 (509)
1/2	M14 x 1.5	-PHN-NS8-MS14	39.1 (1.54)	22.2 (0.87)	19.1 (0.75)	13.0 (0.51)	7.2 (0.28)	7700 (530)
1/2	M20 x 1.5	-PHN-NS8-MS20	42.0 (1.65)	22.2 (0.87)	19.1 (0.75)	16.0 (0.63)	10.0 (0.39)	7700 (530)
1/2	M24 x 1.5	-PHN-NS8-MS24	43.5 (1.71)	25.4 (1.00)	19.1 (0.75)	17.0 (0.67)	11.9 (0.47)	7400 (509)
3/4	M20 x 1.5	-PHN-NS12-MS20	42.1 (1.66)	27.0 (1.06)	19.1 (0.75)	16.0 (0.63)	10.8 (0.43)	7300 (502)
3/4	M27 x 2	-PHN-NS12-MS27	46.7 (1.84)	31.8 (1.25)	19.1 (0.75)	18.0 (0.71)	15.8 (0.62)	6100 (420)
1	M30 x 2	-PHN-NS16-MS30	56.3 (2.22)	34.9 (1.37)	23.9 (0.94)	20.0 (0.79)	19.4 (0.76)	6100 (420)

Male ISO Tapered Threads								Male Metric Threads
P-RT Size	Px-Metric Size	Basic Ordering Number	Dimensions, mm (in.)					Working Pressure psig (bar) 316 SS, Steel
			L	F	B	Bx	E	
1/8	M20 x 1.5	-PHN-RT2-MS20	32.7 (1.29)	22.2 (0.87)	9.7 (0.38)	16.0 (0.63)	5.0 (0.20)	7700 (530)
1/4	M12 x 1.5	-PHN-RT4-MS12	33.4 (1.31)	14.3 (0.56)	14.2 (0.56)	12.0 (0.47)	6.0 (0.24)	8000 (551)
1/4	M20 x 1.5	-PHN-RT4-MS20	37.2 (1.46)	22.2 (0.87)	14.2 (0.56)	16.0 (0.63)	7.0 (0.28)	7700 (530)
3/8	M20 x 1.5	-PHN-RT6-MS20	37.2 (1.46)	22.2 (0.87)	14.2 (0.56)	16.0 (0.63)	9.5 (0.37)	7700 (530)
1/2	M20 x 1.5	-PHN-RT8-MS20	42.0 (1.65)	22.2 (0.87)	19.1 (0.75)	16.0 (0.63)	10.0 (0.39)	7700 (530)

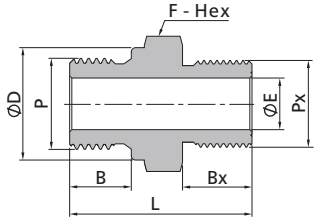

Male ISO Parallel Threads									Male Metric Threads
P-RS Size	Px-Metric Size	Basic Ordering Number	Dimensions, mm (in.)						Working Pressure psig (bar) 316 SS, Steel
			L	F	B	Bx	E	D	
1/8	M20 x 1.5	-PHN-RS2-MS20	32.6 (1.28)	22.2 (0.87)	7.1 (0.28)	16.0 (0.63)	4.0 (0.16)	13.7 (0.54)	7700 (530)
1/4	M18 x 1.5	-PHN-RS4-MS18	34.2 (1.35)	20.6 (0.81)	11.2 (0.44)	15.0 (0.59)	5.9 (0.23)	18.0 (0.71)	7800 (537)
1/4	M20 x 1.5	-PHN-RS4-MS20	37.2 (1.46)	22.2 (0.87)	11.2 (0.44)	16.0 (0.63)	5.9 (0.23)	18.0 (0.71)	7700 (530)
3/8	M20 x 1.5	-PHN-RS6-MS20	37.2 (1.46)	22.2 (0.87)	11.2 (0.44)	16.0 (0.63)	7.9 (0.31)	21.6 (0.85)	7700 (530)
1/2	M20 x 1.5	-PHN-RS8-MS20	40.2 (1.58)	27.0 (1.06)	14.0 (0.55)	16.0 (0.63)	11.9 (0.47)	25.9 (1.02)	7700 (530)

Hex Nipples

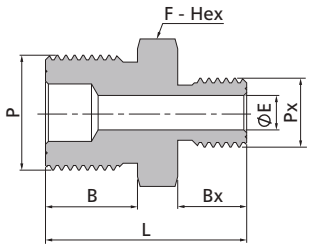

Male Metric Threads

P-Metric Size	Px-Metric Size	Basic Ordering Number	Dimensions, mm (in.)					Working Pressure psig (bar) 316 SS, Steel
			L	F	B	Bx	E	
M20 x 1.5	M10 x 1	-PHN-MS20-MS10	34.0 (1.34)	22.0 (0.87)	16.0 (0.63)	11.0 (0.43)	4.0 (0.16)	10000 (690)
M20 x 1.5	M12 x 1.5	-PHN-MS20-MS12	35.0 (1.38)	22.0 (0.87)	16.0 (0.63)	12.0 (0.47)	6.0 (0.24)	9000 (620)
M20 x 1.5	M14 x 1.5	-PHN-MS20-MS14	36.0 (1.42)	22.0 (0.87)	16.0 (0.63)	13.0 (0.51)	7.2 (0.28)	8000 (551)
M20 x 1.5	M16 x 1.5	-PHN-MS20-MS16	37.0 (1.46)	22.0 (0.87)	16.0 (0.63)	14.0 (0.55)	9.0 (0.35)	7800 (537)
M20 x 1.5	M20 x 1.5	-PHN-MS20	39.0 (1.54)	22.0 (0.87)	16.0 (0.63)	16.0 (0.63)	10.8 (0.43)	7700 (530)
M27 x 2	M27 x 2	-PHN-MS27	44.5 (1.75)	30.0 (1.18)	18.0 (0.71)	18.0 (0.71)	16.1 (0.63)	7300 (502)

Hex Long Nipples

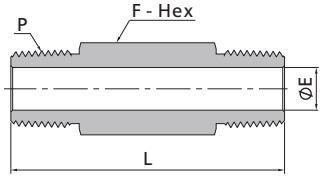

Male NPT Threads

P-NPT Size	Basic Ordering Number	Dimensions, in. (mm)			Working Pressure psig (bar)	
		L	F	E	316 SS, Steel	Brass
1/8	-PLN-NS2-1.5	1.50 (38.1)	0.44 (11.1)	0.19 (4.8)	10000 (690)	5000 (344)
1/8	-PLN-NS2-2	2.00 (50.8)	0.44 (11.1)	0.19 (4.8)	10000 (690)	5000 (344)
1/8	-PLN-NS2-2.5	2.50 (63.5)	0.44 (11.1)	0.19 (4.8)	10000 (690)	5000 (344)
1/8	-PLN-NS2-3	3.00 (76.2)	0.44 (11.1)	0.19 (4.8)	10000 (690)	5000 (344)
1/4	-PLN-NS4-1.5	1.50 (38.1)	0.56 (14.3)	0.28 (7.1)	8000 (551)	4000 (275)
1/4	-PLN-NS4-2	2.00 (50.8)	0.56 (14.3)	0.28 (7.1)	8000 (551)	4000 (275)
1/4	-PLN-NS4-2.5	2.50 (63.5)	0.56 (14.3)	0.28 (7.1)	8000 (551)	4000 (275)
1/4	-PLN-NS4-3	3.00 (76.2)	0.56 (14.3)	0.28 (7.1)	8000 (551)	4000 (275)
1/4	-PLN-NS4-4	4.00 (101.6)	0.56 (14.3)	0.28 (7.1)	8000 (551)	4000 (275)
3/8	-PLN-NS6-1.5	1.50 (38.1)	0.69 (17.5)	0.38 (9.7)	7800 (537)	3900 (268)
3/8	-PLN-NS6-2	2.00 (50.8)	0.69 (17.5)	0.38 (9.7)	7800 (537)	3900 (268)
3/8	-PLN-NS6-2.5	2.50 (63.5)	0.69 (17.5)	0.38 (9.7)	7800 (537)	3900 (268)
3/8	-PLN-NS6-3	3.00 (76.2)	0.69 (17.5)	0.38 (9.7)	7800 (537)	3900 (268)
3/8	-PLN-NS6-4	4.00 (101.6)	0.69 (17.5)	0.38 (9.7)	7800 (537)	3900 (268)
1/2	-PLN-NS8-2	2.00 (50.8)	0.87 (22.2)	0.47 (11.9)	7700 (530)	3800 (261)
1/2	-PLN-NS8-3	3.00 (76.2)	0.87 (22.2)	0.47 (11.9)	7700 (530)	3800 (261)
1/2	-PLN-NS8-4	4.00 (101.6)	0.87 (22.2)	0.47 (11.9)	7700 (530)	3800 (261)
1/2	-PLN-NS8-6	6.00 (152.4)	0.87 (22.2)	0.47 (11.9)	7700 (530)	3800 (261)
3/4	-PLN-NS12-2	2.00 (50.8)	1.06 (27.0)	0.62 (15.7)	7300 (502)	3600 (248)
3/4	-PLN-NS12-3	3.00 (76.2)	1.06 (27.0)	0.62 (15.7)	7300 (502)	3600 (248)
3/4	-PLN-NS12-4	4.00 (101.6)	1.06 (27.0)	0.62 (15.7)	7300 (502)	3600 (248)
1	-PLN-NS16-3	3.00 (76.2)	1.37 (34.9)	0.88 (22.4)	5300 (365)	2600 (179)
1	-PLN-NS16-4	4.00 (101.6)	1.37 (34.9)	0.88 (22.4)	5300 (365)	2600 (179)

Hex Long Nipples

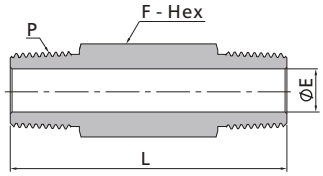

Male ISO Tapered Threads

P-RT Size	Basic Ordering Number	Dimensions, in. (mm)			Working Pressure psig (bar)	
		L	F	E	316 SS, Steel	Brass
1/8	-PLN-RT2-1.5	1.50 (38.1)	0.44 (11.1)	0.19 (4.8)	10000 (690)	5000 (344)
1/8	-PLN-RT2-2	2.00 (50.8)	0.44 (11.1)	0.19 (4.8)	10000 (690)	5000 (344)
1/8	-PLN-RT2-2.5	2.50 (63.5)	0.44 (11.1)	0.19 (4.8)	10000 (690)	5000 (344)
1/8	-PLN-RT2-3	3.00 (76.2)	0.44 (11.1)	0.19 (4.8)	10000 (690)	5000 (344)
1/4	-PLN-RT4-1.5	1.50 (38.1)	0.56 (14.3)	0.28 (7.1)	8000 (551)	4000 (275)
1/4	-PLN-RT4-2	2.00 (50.8)	0.56 (14.3)	0.28 (7.1)	8000 (551)	4000 (275)
1/4	-PLN-RT4-2.5	2.50 (63.5)	0.56 (14.3)	0.28 (7.1)	8000 (551)	4000 (275)
1/4	-PLN-RT4-3	3.00 (76.2)	0.56 (14.3)	0.28 (7.1)	8000 (551)	4000 (275)
1/4	-PLN-RT4-4	4.00 (101.6)	0.56 (14.3)	0.28 (7.1)	8000 (551)	4000 (275)
3/8	-PLN-RT6-1.5	1.50 (38.1)	0.69 (17.5)	0.38 (9.7)	7800 (537)	3900 (268)
3/8	-PLN-RT6-2	2.00 (50.8)	0.69 (17.5)	0.38 (9.7)	7800 (537)	3900 (268)
3/8	-PLN-RT6-2.5	2.50 (63.5)	0.69 (17.5)	0.38 (9.7)	7800 (537)	3900 (268)
3/8	-PLN-RT6-3	3.00 (76.2)	0.69 (17.5)	0.38 (9.7)	7800 (537)	3900 (268)
3/8	-PLN-RT6-4	4.00 (101.6)	0.69 (17.5)	0.38 (9.7)	7800 (537)	3900 (268)
1/2	-PLN-RT8-2	2.00 (50.8)	0.87 (22.2)	0.47 (11.9)	7700 (530)	3800 (261)
1/2	-PLN-RT8-3	3.00 (76.2)	0.87 (22.2)	0.47 (11.9)	7700 (530)	3800 (261)
1/2	-PLN-RT8-4	4.00 (101.6)	0.87 (22.2)	0.47 (11.9)	7700 (530)	3800 (261)
1/2	-PLN-RT8-6	6.00 (152.4)	0.87 (22.2)	0.47 (11.9)	7700 (530)	3800 (261)
3/4	-PLN-RT12-2	2.00 (50.8)	1.06 (27.0)	0.62 (15.7)	7300 (502)	3600 (248)
3/4	-PLN-RT12-3	3.00 (76.2)	1.06 (27.0)	0.62 (15.7)	7300 (502)	3600 (248)
3/4	-PLN-RT12-4	4.00 (101.6)	1.06 (27.0)	0.62 (15.7)	7300 (502)	3600 (248)
1	-PLN-RT16-3	3.00 (76.2)	1.37 (34.9)	0.88 (22.4)	5300 (365)	2600 (179)
1	-PLN-RT16-4	4.00 (101.6)	1.37 (34.9)	0.88 (22.4)	5300 (365)	2600 (179)

Close Nipples

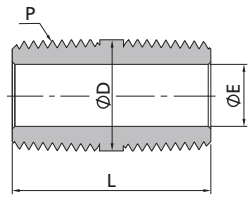

Male NPT Threads

P-NPT Size	Basic Ordering Number	Dimensions, in. (mm)			Working Pressure psig (bar)	
		L	D	E	316 SS, Steel	Brass
1/16	-PCN-NS1	0.75 (19.1)	0.31 (7.9)	0.12 (3.0)	11000 (757)	5500 (378)
1/8	-PCN-NS2	0.75 (19.1)	0.41 (10.3)	0.19 (4.8)	10000 (690)	5000 (344)
1/4	-PCN-NS4	1.12 (28.4)	0.54 (13.7)	0.28 (7.1)	8000 (551)	4000 (275)
3/8	-PCN-NS6	1.12 (28.4)	0.67 (17.1)	0.38 (9.6)	7800 (537)	3900 (268)
1/2	-PCN-NS8	1.50 (38.1)	0.84 (21.3)	0.47 (11.9)	7700 (530)	3800 (261)
3/4	-PCN-NS12	1.50 (38.1)	1.05 (26.7)	0.62 (15.7)	7300 (502)	3600 (248)
1	-PCN-NS16	1.88 (47.8)	1.31 (33.4)	0.88 (22.4)	5300 (365)	2600 (179)

Male ISO Tapered Threads

P-RT Size	Basic Ordering Number	Dimensions, in. (mm)			Working Pressure psig (bar)	
		L	D	E	316 SS, Steel	Brass
1/16	-PCN-RT1	0.75 (19.1)	0.31 (7.9)	0.12 (3.0)	11000 (757)	5500 (378)
1/8	-PCN-RT2	0.75 (19.1)	0.41 (10.3)	0.19 (4.8)	10000 (690)	5000 (344)
1/4	-PCN-RT4	1.12 (28.4)	0.54 (13.7)	0.28 (7.1)	8000 (551)	4000 (275)
3/8	-PCN-RT6	1.12 (28.4)	0.67 (17.1)	0.38 (9.7)	7800 (537)	3900 (268)
1/2	-PCN-RT8	1.50 (38.1)	0.84 (21.3)	0.47 (11.9)	7700 (530)	3800 (261)
3/4	-PCN-RT12	1.50 (38.1)	1.05 (26.7)	0.62 (15.7)	7300 (502)	3600 (248)
1	-PCN-RT16	1.88 (47.8)	1.31 (33.4)	0.88 (22.4)	5300 (365)	2600 (179)

Special Pipe Nipples

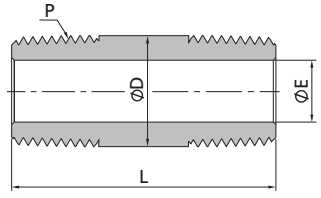

Male NPT Threads

P-NPT Size	Basic Ordering Number	Dimensions, in. (mm)			Working Pressure psig (bar)	
		L	D	E	316 SS, Steel	Brass
1/8	-PSN-NS2-1.5	1.50 (38.1)	0.41 (10.3)	0.19 (4.8)	10000 (690)	5000 (344)
1/8	-PSN-NS2-2	2.00 (50.8)	0.41 (10.3)	0.19 (4.8)	10000 (690)	5000 (344)
1/8	-PSN-NS2-2.5	2.50 (63.5)	0.41 (10.3)	0.19 (4.8)	10000 (690)	5000 (344)
1/8	-PSN-NS2-3	3.00 (76.2)	0.41 (10.3)	0.19 (4.8)	10000 (690)	5000 (344)
1/4	-PSN-NS4-1.5	1.50 (38.1)	0.54 (13.7)	0.28 (7.1)	8000 (551)	4000 (275)
1/4	-PSN-NS4-2	2.00 (50.8)	0.54 (13.7)	0.28 (7.1)	8000 (551)	4000 (275)
1/4	-PSN-NS4-2.5	2.50 (63.5)	0.54 (13.7)	0.28 (7.1)	8000 (551)	4000 (275)
1/4	-PSN-NS4-3	3.00 (76.2)	0.54 (13.7)	0.28 (7.1)	8000 (551)	4000 (275)
1/4	-PSN-NS4-4	4.00 (101.6)	0.54 (13.7)	0.28 (7.1)	8000 (551)	4000 (275)
3/8	-PSN-NS6-1.5	1.50 (38.1)	0.67 (17.1)	0.38 (9.7)	7800 (537)	3900 (268)
3/8	-PSN-NS6-2	2.00 (50.8)	0.67 (17.1)	0.38 (9.7)	7800 (537)	3900 (268)
3/8	-PSN-NS6-2.5	2.50 (63.5)	0.67 (17.1)	0.38 (9.7)	7800 (537)	3900 (268)
3/8	-PSN-NS6-3	3.00 (76.2)	0.67 (17.1)	0.38 (9.7)	7800 (537)	3900 (268)
3/8	-PSN-NS6-4	4.00 (101.6)	0.67 (17.1)	0.38 (9.7)	7800 (537)	3900 (268)
1/2	-PSN-NS8-2	2.00 (50.8)	0.84 (21.3)	0.47 (11.9)	7700 (530)	3800 (261)
1/2	-PSN-NS8-3	3.00 (76.2)	0.84 (21.3)	0.47 (11.9)	7700 (530)	3800 (261)
1/2	-PSN-NS8-4	4.00 (101.6)	0.84 (21.3)	0.47 (11.9)	7700 (530)	3800 (261)
1/2	-PSN-NS8-6	6.00 (152.4)	0.84 (21.3)	0.47 (11.9)	7700 (530)	3800 (261)
3/4	-PSN-NS12-2	2.00 (50.8)	1.05 (26.7)	0.62 (15.7)	7300 (502)	3600 (248)
3/4	-PSN-NS12-3	3.00 (76.2)	1.05 (26.7)	0.62 (15.7)	7300 (502)	3600 (248)
3/4	-PSN-NS12-4	4.00 (101.6)	1.05 (26.7)	0.62 (15.7)	7300 (502)	3600 (248)
1	-PSN-NS16-3	3.00 (76.2)	1.31 (33.4)	0.88 (22.4)	5300 (365)	2600 (179)
1	-PSN-NS16-4	4.00 (101.6)	1.31 (33.4)	0.88 (22.4)	5300 (365)	2600 (179)

Adapters

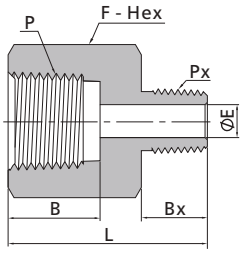

Female NPT Threads								Male NPT Threads	
P-NPT Size	Px-NPT Size	Basic Ordering Number	Dimensions, in. (mm)					Working Pressure psig (bar)	
			L	F	B	Bx	E	316 SS, Steel	Brass
1/8	1/16	-PA-NS2-NS1	1.09 (27.7)	0.56 (14.3)	0.41 (10.4)	0.38 (9.7)	0.12 (3.0)	6500 (447)	3200 (220)
1/8	1/8	-PA-NS2	1.10 (27.9)	0.56 (14.3)	0.41 (10.4)	0.38 (9.7)	0.19 (4.8)	6500 (447)	3200 (220)
1/4	1/16	-PA-NS4-NS1	1.20 (30.5)	0.75 (19.1)	0.59 (15.0)	0.38 (9.7)	0.12 (3.0)	6600 (454)	3300 (227)
1/4	1/8	-PA-NS4-NS2	1.26 (32.0)	0.75 (19.1)	0.59 (15.0)	0.38 (9.7)	0.19 (4.8)	6600 (454)	3300 (227)
1/4	1/4	-PA-NS4	1.40 (35.6)	0.75 (19.1)	0.59 (15.0)	0.56 (14.2)	0.28 (7.1)	6600 (454)	3300 (227)
3/8	1/16	-PA-NS6-NS1	1.25 (31.8)	0.87 (22.2)	0.59 (15.0)	0.38 (9.7)	0.12 (3.0)	5300 (365)	2600 (179)
3/8	1/8	-PA-NS6-NS2	1.33 (33.8)	0.87 (22.2)	0.59 (15.0)	0.38 (9.7)	0.19 (4.8)	5300 (365)	2600 (179)
3/8	1/4	-PA-NS6-NS4	1.50 (38.1)	0.87 (22.2)	0.59 (15.0)	0.56 (14.2)	0.28 (7.1)	5300 (365)	2600 (179)
3/8	3/8	-PA-NS6	1.51 (38.4)	0.87 (22.2)	0.59 (15.0)	0.56 (14.2)	0.38 (9.6)	5300 (365)	2600 (179)
1/2	1/8	-PA-NS8-NS2	1.58 (40.1)	1.06 (27.0)	0.78 (19.8)	0.38 (9.7)	0.19 (4.8)	4900 (337)	2400 (165)
1/2	1/4	-PA-NS8-NS4	1.76 (44.7)	1.06 (27.0)	0.78 (19.8)	0.56 (14.2)	0.28 (7.1)	4900 (337)	2400 (165)
1/2	3/8	-PA-NS8-NS6	1.75 (44.4)	1.06 (27.0)	0.78 (19.8)	0.56 (14.2)	0.38 (9.6)	4900 (337)	2400 (165)
1/2	1/2	-PA-NS8	1.94 (49.3)	1.06 (27.0)	0.78 (19.8)	0.75 (19.1)	0.47 (11.9)	4900 (337)	2400 (165)
3/4	1/8	-PA-NS12-NS2	1.56 (39.6)	1.31 (33.3)	0.81 (20.6)	0.38 (9.7)	0.19 (4.8)	4600 (316)	2300 (158)
3/4	1/4	-PA-NS12-NS4	1.85 (47.0)	1.31 (33.3)	0.81 (20.6)	0.56 (14.2)	0.28 (7.1)	4600 (316)	2300 (158)
3/4	3/8	-PA-NS12-NS6	1.82 (46.2)	1.31 (33.3)	0.81 (20.6)	0.56 (14.2)	0.38 (9.6)	4600 (316)	2300 (158)
3/4	1/2	-PA-NS12-NS8	2.02 (51.3)	1.31 (33.3)	0.81 (20.6)	0.75 (19.1)	0.47 (11.9)	4600 (316)	2300 (158)
3/4	3/4	-PA-NS12	2.02 (51.3)	1.31 (33.3)	0.81 (20.6)	0.75 (19.1)	0.62 (15.7)	4600 (316)	2300 (158)
1	1/8	-PA-NS16-NS2	1.81 (46.0)	1.63 (41.3)	1.00 (25.4)	0.38 (9.7)	0.19 (4.8)	4400 (303)	2200 (151)
1	1/4	-PA-NS16-NS4	1.96 (49.8)	1.63 (41.3)	1.00 (25.4)	0.56 (14.2)	0.28 (7.1)	4400 (303)	2200 (151)
1	3/8	-PA-NS16-NS6	2.00 (50.8)	1.63 (41.3)	1.00 (25.4)	0.56 (14.2)	0.38 (9.6)	4400 (303)	2200 (151)
1	1/2	-PA-NS16-NS8	2.16 (54.9)	1.63 (41.3)	1.00 (25.4)	0.75 (19.1)	0.47 (11.9)	4400 (303)	2200 (151)
1	3/4	-PA-NS16-NS12	2.17 (55.1)	1.63 (41.3)	1.00 (25.4)	0.75 (19.1)	0.62 (15.7)	4400 (303)	2200 (151)
1	1	-PA-NS16	2.28 (57.9)	1.63 (41.3)	1.00 (25.4)	0.94 (23.9)	0.88 (22.4)	4400 (303)	2200 (151)
1 1/4	1	-PA-NS20-NS16	2.47 (62.7)	2.13 (54.0)	1.00 (25.4)	0.94 (23.9)	0.88 (22.4)	5000 (344)	2500 (172)

Adapters

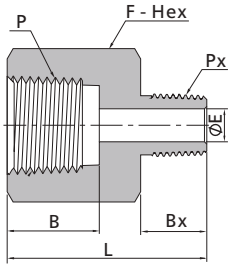

Female NPT Threads									Male ISO Tapered Threads	
P-NPT Size	Px-RT Size	Basic Ordering Number	Dimensions, in. (mm)						Working Pressure psig (bar)	
			L	F	B	Bx	E		316 SS, Steel	Brass
1/8	1/8	-PA-NS2-RT2	1.09 (27.7)	0.56 (14.3)	0.41 (10.4)	0.38 (9.7)	0.19 (4.8)		6500 (447)	3200 (220)
1/4	1/4	-PA-NS4-RT4	1.42 (36.1)	0.75 (19.1)	0.59 (15.0)	0.56 (14.2)	0.28 (7.1)		6600 (454)	3300 (227)
3/8	3/8	-PA-NS6-RT6	1.50 (38.1)	0.87 (22.2)	0.59 (15.0)	0.56 (14.2)	0.38 (9.6)		5300 (365)	2600 (179)
1/2	1/2	-PA-NS8-RT8	1.94 (49.3)	1.06 (27.0)	0.78 (19.8)	0.75 (19.1)	0.47 (11.9)		4900 (337)	2400 (165)
3/4	3/4	-PA-NS12-RT12	2.02 (51.3)	1.31 (33.3)	0.81 (20.6)	0.75 (19.1)	0.62 (15.7)		4600 (316)	2300 (158)
1	1	-PA-NS16-RT16	2.30 (58.4)	1.63 (41.3)	1.00 (25.4)	0.94 (23.9)	0.88 (22.4)		4400 (303)	2200 (151)

Adapters

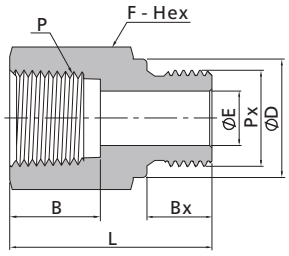

Female NPT Threads									Male ISO Parallel Threads	
P-NPT Size	Px-RS Size	Basic Ordering Number	Dimensions, in. (mm)						Working Pressure psig (bar)	
			L	F	B	Bx	D	E	316 SS, Steel	Brass
1/8	1/8	-PA-NS2-RS2	0.99 (25.1)	0.56 (14.3)	0.41 (10.4)	0.28 (7.1)	0.54 (13.7)	0.16 (4.1)	6500 (447)	3200 (220)
1/4	1/4	-PA-NS4-RS4	1.32 (33.5)	0.75 (19.1)	0.41 (10.4)	0.44 (11.2)	0.71 (18.0)	0.23 (5.8)	6600 (454)	3300 (227)
3/8	3/8	-PA-NS6-RS6	1.41 (35.8)	0.87 (22.2)	0.59 (15.0)	0.44 (11.2)	0.85 (21.6)	0.31 (7.9)	5300 (365)	2600 (179)
1/2	1/2	-PA-NS8-RS8	1.74 (44.2)	1.06 (27.0)	0.59 (15.0)	0.56 (14.2)	1.02 (25.9)	0.47 (11.9)	4900 (337)	2400 (165)
3/4	3/4	-PA-NS12-RS12	1.89 (48.0)	1.31 (33.3)	0.81 (20.6)	0.62 (15.7)	1.26 (32.0)	0.62 (15.7)	4600 (316)	2300 (158)
1	1	-PA-NS16-RS16	2.10 (53.3)	1.63 (41.3)	1.00 (25.4)	0.72 (18.3)	1.53 (38.9)	0.78 (19.8)	4400 (303)	2200 (151)

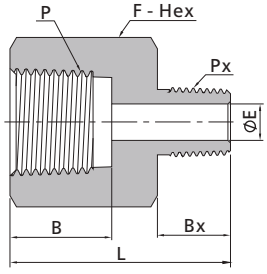

Female ISO Tapered Threads								Male ISO Tapered Threads	
P-RT Size	Px-RT Size	Basic Ordering Number	Dimensions, in. (mm)					Working Pressure psig (bar)	
			L	F	B	Bx	E	316 SS, Steel	Brass
1/8	1/8	-PA-RT2	1.09 (27.7)	0.56 (14.3)	0.41 (10.4)	0.38 (9.7)	0.19 (4.8)	6500 (447)	3200 (220)
1/4	1/8	-PA-RT4-RT2	1.26 (32.0)	0.75 (19.1)	0.59 (15.0)	0.38 (9.7)	0.19 (4.8)	6600 (454)	3300 (227)
1/4	1/4	-PA-RT4	1.42 (36.1)	0.75 (19.1)	0.59 (15.0)	0.56 (14.2)	0.28 (7.1)	6600 (454)	3300 (227)
3/8	1/4	-PA-RT6-RT4	1.50 (38.1)	0.87 (22.2)	0.59 (15.0)	0.56 (14.2)	0.28 (7.1)	5300 (365)	2600 (179)
3/8	3/8	-PA-RT6	1.50 (38.1)	0.87 (22.2)	0.59 (15.0)	0.56 (14.2)	0.38 (9.7)	5300 (365)	2600 (179)
1/2	1/4	-PA-RT8-RT4	1.76 (44.7)	1.06 (27.0)	0.78 (19.8)	0.56 (14.2)	0.28 (7.1)	4900 (337)	2400 (165)
1/2	3/8	-PA-RT8-RT6	1.75 (44.4)	1.06 (27.0)	0.78 (19.8)	0.56 (14.2)	0.38 (9.7)	4900 (337)	2400 (165)
1/2	1/2	-PA-RT8	1.95 (49.5)	1.06 (27.0)	0.78 (19.8)	0.75 (19.1)	0.47 (11.9)	4900 (337)	2400 (165)
3/4	3/4	-PA-RT12	2.02 (51.3)	1.31 (33.3)	0.81 (20.6)	0.75 (19.1)	0.62 (15.7)	4600 (316)	2300 (158)
1	1	-PA-RT16	2.30 (58.4)	1.63 (41.3)	1.00 (25.4)	0.94 (23.9)	0.88 (22.4)	4400 (303)	2200 (151)

Adapters

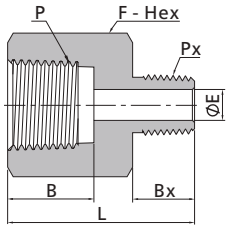

Female ISO Tapered Threads								Male NPT Threads	
P-RT Size	Px-NPT Size	Basic Ordering Number	Dimensions, in. (mm)					Working Pressure psig (bar)	
			L	F	B	Bx	E	316 SS, Steel	Brass
1/8	1/8	-PA-RT2-NS2	1.09 (27.7)	0.56 (14.3)	0.41 (10.4)	0.38 (9.7)	0.19 (4.8)	6500 (447)	3200 (220)
1/4	1/4	-PA-RT4-NS4	1.43 (36.3)	0.75 (19.1)	0.59 (15.0)	0.56 (14.2)	0.28 (7.1)	6600 (454)	3300 (227)
3/8	3/8	-PA-RT6-NS6	1.51 (38.4)	0.87 (22.2)	0.59 (15.0)	0.56 (14.2)	0.38 (9.6)	5300 (365)	2600 (179)
1/2	1/2	-PA-RT8-NS8	1.96 (49.8)	1.06 (27.0)	0.78 (19.8)	0.75 (19.1)	0.47 (11.9)	4900 (337)	2400 (165)
3/4	3/4	-PA-RT12-NS12	2.02 (51.3)	1.31 (33.3)	0.81 (20.6)	0.75 (19.1)	0.62 (15.7)	4600 (316)	2300 (158)
1	1	-PA-RT16-NS16	2.30 (58.4)	1.63 (41.3)	1.00 (25.4)	0.94 (23.9)	0.88 (22.4)	4400 (303)	2200 (151)

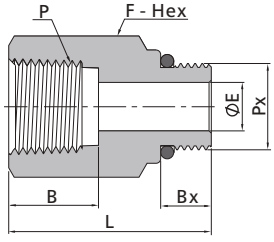

Female NPT Threads				Male SAE/MS Straight Threads (ST)					
P-NPT Size	Px-SAE Nominal Size	Px-SAE/MS Thread Specification	Basic Ordering Number	Dimensions, in. (mm)					Working Pressure psig (bar)
				L	F	B	Bx	E	316 SS, Steel
1/4	4	7/16-20	-PA-NS4-ST7	1.32 (33.5)	0.75 (19.1)	0.59 (15.0)	0.36 (9.1)	0.20 (5.1)	4500 (310)
3/8	6	9/16-18	-PA-NS6-ST9	1.39 (35.3)	0.94 (23.8)	0.59 (15.0)	0.39 (9.9)	0.28 (7.1)	4500 (310)
1/2	8	3/4-16	-PA-NS8-ST12	1.76 (44.7)	1.06 (27.0)	0.78 (19.8)	0.44 (11.2)	0.42 (10.7)	4500 (310)
3/4	12	1 1/16-12	-PA-NS12-ST17	1.99 (50.5)	1.37 (34.9)	0.81 (20.6)	0.59 (15.0)	0.66 (16.8)	3600 (248)
1	16	1 5/16-12	-PA-NS16-ST21	2.12 (53.8)	1.63 (41.3)	1.00 (25.4)	0.59 (15.0)	0.85 (21.5)	2900 (199)

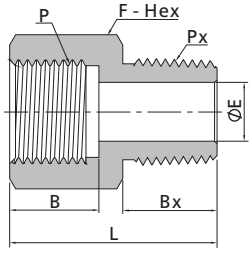

Female ISO Parallel Threads								Male NPT Threads
P-RG Size	Px-NPT Size	Basic Ordering Number	Dimensions, in. (mm)					Working Pressure psig (bar)
			L	F	B	Bx	E	316 SS, Steel
1/8	1/8	-PA-RG2-NS2	0.86 (21.8)	0.56 (14.3)	0.26 (6.5)	0.38 (9.7)	0.18 (4.5)	6100 (420)
1/4	1/4	-PA-RG4-NS4	1.19 (30.2)	0.75 (19.1)	0.51 (12.9)	0.56 (14.2)	0.22 (5.5)	5700 (392)
3/8	3/8	-PA-RG6-NS6	1.27 (32.2)	0.94 (23.8)	0.56 (14.2)	0.56 (14.2)	0.26 (6.5)	5700 (392)
1/2	1/2	-PA-RG8-NS8	1.68 (42.7)	1.06 (27.0)	0.74 (18.8)	0.75 (19.1)	0.28 (7.0)	3900 (268)

Reducing Bushings

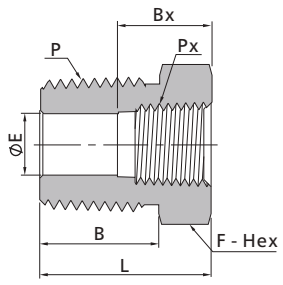

Male NPT Threads								Female NPT Threads	
P-NPT Size	Px-NPT Size	Basic Ordering Number	Dimensions, in. (mm)					Working Pressure psig (bar)	
			L	F	B	Bx	E	316 SS, Steel	Brass
1/8	1/16	-PRB-NS2-NS1	1.03 (26.2)	0.44 (11.1)	0.38 (9.7)	0.39 (9.9)	0.19 (4.8)	6500 (447)	3200 (220)
1/4	1/16	-PRB-NS4-NS1	0.86 (21.8)	0.56 (14.3)	0.56 (14.2)	0.39 (9.9)	0.19 (4.8)	8000 (551)	4000 (275)
1/4	1/8	-PRB-NS4-NS2	1.06 (26.9)	0.56 (14.3)	0.56 (14.2)	0.41 (10.4)	0.28 (7.1)	6500 (447)	3300 (227)
3/8	1/16	-PRB-NS6-NS1	0.86 (21.8)	0.69 (17.5)	0.56 (14.2)	0.39 (9.9)	0.19 (4.8)	7800 (537)	3900 (268)
3/8	1/8	-PRB-NS6-NS2	0.86 (21.8)	0.69 (17.5)	0.56 (14.2)	0.41 (10.4)	0.34 (8.6)	7800 (537)	3900 (268)
3/8	1/4	-PRB-NS6-NS4	1.19 (30.2)	0.75 (19.1)	0.56 (14.2)	0.59 (15.0)	0.38 (9.6)	6600 (454)	3300 (227)
1/2	1/8	-PRB-NS8-NS2	1.08 (27.4)	0.87 (22.2)	0.75 (19.1)	0.41 (10.4)	0.34 (8.6)	8300 (571)	4400 (303)
1/2	1/4	-PRB-NS8-NS4	1.08 (27.4)	0.87 (22.2)	0.75 (19.1)	0.59 (15.0)	0.45 (11.4)	8300 (571)	4400 (303)
1/2	3/8	-PRB-NS8-NS6	1.41 (35.8)	0.87 (22.2)	0.75 (19.1)	0.59 (15.0)	0.47 (11.9)	5300 (365)	2600 (179)
3/4	1/4	-PRB-NS12-NS4	1.08 (27.4)	1.06 (27.0)	0.75 (19.1)	0.59 (15.0)	0.45 (11.4)	7300 (502)	3600 (248)
3/4	3/8	-PRB-NS12-NS6	1.08 (27.4)	1.06 (27.0)	0.75 (19.1)	0.59 (15.0)	0.59 (15.0)	7300 (502)	3600 (248)
3/4	1/2	-PRB-NS12-NS8	1.63 (41.4)	1.06 (27.0)	0.75 (19.1)	0.78 (19.8)	0.62 (15.7)	4900 (337)	2400 (165)
1	1/4	-PRB-NS16-NS4	1.37 (34.8)	1.37 (34.9)	0.94 (23.9)	0.59 (15.0)	0.45 (11.4)	6500 (447)	3200 (220)
1	3/8	-PRB-NS16-NS6	1.37 (34.8)	1.37 (34.9)	0.94 (23.9)	0.59 (15.0)	0.59 (15.0)	6500 (447)	3200 (220)
1	1/2	-PRB-NS16-NS8	1.37 (34.8)	1.37 (34.9)	0.94 (23.9)	0.78 (19.8)	0.73 (18.5)	6500 (447)	3200 (220)
1	3/4	-PRB-NS16-NS12	1.85 (47.0)	1.37 (34.9)	0.94 (23.9)	0.81 (20.6)	0.88 (22.4)	5300 (365)	2600 (179)
1 1/4	3/4	-PRB-NS20-NS12	1.47 (37.3)	1.75 (44.5)	0.94 (23.9)	0.81 (20.6)	0.88 (22.4)	6000 (410)	3000 (205)
1 1/4	1	-PRB-NS20-NS16	1.47 (37.3)	1.75 (44.5)	0.94 (23.9)	1.00 (25.4)	0.88 (22.4)	3500 (241)	1750 (120)
1 1/2	1	-PRB-NS24-NS16	1.58 (40.1)	2.00 (50.8)	1.03 (26.2)	1.00 (25.4)	0.88 (22.4)	5000 (344)	2500 (172)
1 1/2	1 1/4	-PRB-NS24-NS20	2.20 (56.0)	2.13 (54.0)	1.03 (26.2)	1.00 (25.4)	1.34 (34.0)	5000 (344)	2500 (172)

Reducing Bushings

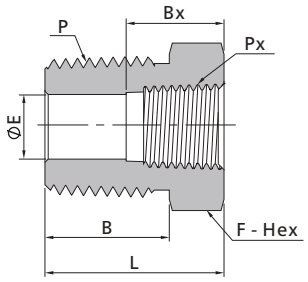

Male NPT Threads								Female ISO Tapered Threads	
P-NPT Size	Px-RT Size	Basic Ordering Number	Dimensions, in. (mm)					Working Pressure psig (bar)	
			L	F	B	Bx	E	316 SS, Steel	Brass
1/8	1/16	-PRB-NS2-RT1	1.03 (26.2)	0.44 (11.1)	0.38 (9.7)	0.39 (9.9)	0.19 (4.8)	6500 (447)	3200 (220)
1/4	1/16	-PRB-NS4-RT1	0.86 (21.8)	0.56 (14.3)	0.56 (14.2)	0.39 (9.9)	0.19 (4.8)	8000 (551)	4000 (275)
1/4	1/8	-PRB-NS4-RT2	1.06 (26.9)	0.56 (14.3)	0.56 (14.2)	0.41 (10.4)	0.28 (7.1)	6500 (447)	3300 (227)
3/8	1/16	-PRB-NS6-RT1	0.86 (21.8)	0.69 (17.5)	0.56 (14.2)	0.39 (9.9)	0.19 (4.8)	7800 (537)	3900 (268)
3/8	1/8	-PRB-NS6-RT2	0.86 (21.8)	0.69 (17.5)	0.56 (14.2)	0.41 (10.4)	0.28 (7.1)	7800 (537)	3900 (268)
3/8	1/4	-PRB-NS6-RT4	1.19 (30.2)	0.75 (19.1)	0.56 (14.2)	0.59 (15.0)	0.38 (9.7)	6600 (454)	3300 (227)
1/2	1/8	-PRB-NS8-RT2	1.08 (27.4)	0.87 (22.2)	0.75 (19.1)	0.41 (10.4)	0.28 (7.1)	8300 (571)	4400 (303)
1/2	1/4	-PRB-NS8-RT4	1.08 (27.4)	0.87 (22.2)	0.75 (19.1)	0.59 (15.0)	0.41 (10.4)	8300 (571)	4400 (303)
1/2	3/8	-PRB-NS8-RT6	1.41 (35.8)	0.87 (22.2)	0.75 (19.1)	0.59 (15.0)	0.47 (11.9)	5300 (365)	2600 (179)
3/4	1/4	-PRB-NS12-RT4	1.08 (27.4)	1.06 (27.0)	0.75 (19.1)	0.59 (15.0)	0.41 (10.4)	7300 (502)	3600 (248)
3/4	3/8	-PRB-NS12-RT6	1.08 (27.4)	1.06 (27.0)	0.75 (19.1)	0.59 (15.0)	0.50 (12.7)	7300 (502)	3600 (248)
3/4	1/2	-PRB-NS12-RT8	1.63 (41.4)	1.06 (27.0)	0.75 (19.1)	0.78 (19.8)	0.62 (15.7)	4900 (337)	2400 (165)
1	1/4	-PRB-NS16-RT4	1.37 (34.8)	1.37 (34.9)	0.94 (23.9)	0.59 (15.0)	0.41 (10.4)	6500 (447)	3200 (220)
1	3/8	-PRB-NS16-RT6	1.37 (34.8)	1.37 (34.9)	0.94 (23.9)	0.59 (15.0)	0.50 (12.7)	6500 (447)	3200 (220)
1	1/2	-PRB-NS16-RT8	1.37 (34.8)	1.37 (34.9)	0.94 (23.9)	0.78 (19.8)	0.62 (15.7)	6500 (447)	3200 (220)
1	3/4	-PRB-NS16-RT12	1.85 (47.0)	1.37 (34.9)	0.94 (23.9)	0.81 (20.6)	0.88 (22.4)	5300 (365)	2600 (179)
1 1/4	3/4	-PRB-NS20-RT12	1.47 (37.3)	1.75 (44.5)	0.94 (23.9)	0.81 (20.6)	0.88 (22.4)	6000 (410)	3000 (205)
1 1/4	1	-PRB-NS20-RT16	1.47 (37.3)	1.75 (44.5)	0.94 (23.9)	1.00 (25.4)	0.88 (22.4)	3500 (241)	1750 (120)
1 1/2	1	-PRB-NS24-RT16	1.58 (40.1)	2.00 (50.8)	1.03 (26.2)	1.00 (25.4)	0.88 (22.4)	5000 (344)	2500 (172)
1 1/2	1 1/4	-PRB-NS24-RT20	2.20 (56.0)	2.13 (54.0)	1.03 (26.2)	1.00 (25.4)	1.34 (34.0)	5000 (344)	2500 (172)

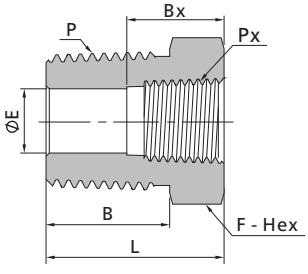

Male ISO Tapered Threads								Female ISO Tapered Threads	
P-RT Size	Px-RT Size	Basic Ordering Number	Dimensions, in. (mm)					Working Pressure psig (bar)	
			L	F	B	Bx	E	316 SS, Steel	Brass
1/4	1/8	-PRB-RT4-RT2	1.06 (26.9)	0.56 (14.3)	0.56 (14.2)	0.41 (10.4)	0.28 (7.1)	6500 (447)	3200 (220)
3/8	1/4	-PRB-RT6-RT4	1.19 (30.2)	0.75 (19.1)	0.56 (14.2)	0.59 (15.0)	0.38 (9.6)	6600 (454)	3300 (227)
1/2	1/4	-PRB-RT8-RT4	1.08 (27.4)	0.87 (22.2)	0.75 (19.1)	0.59 (15.0)	0.44 (11.2)	8300 (571)	4400 (303)
1/2	3/8	-PRB-RT8-RT6	1.41 (35.8)	0.87 (22.2)	0.75 (19.1)	0.59 (15.0)	0.47 (11.9)	5300 (365)	2600 (179)

Reducing Bushings

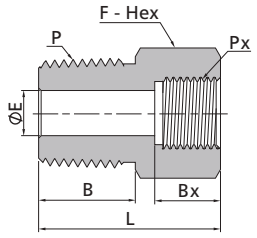

Male NPT Threads								Female ISO Parallel Threads
P-NPT Size	Px-RG Size	Basic Ordering Number	Dimensions, in. (mm)					Working Pressure psig (bar)
			L	F	B	Bx	E	316 SS, Steel
3/8	1/4	-PRB-NS6-RG4	1.19 (30.2)	0.75 (19.1)	0.56 (14.2)	0.51 (12.9)	0.22 (5.6)	5700 (392)
1/2	3/8	-PRB-NS8-RG6	1.41 (35.8)	0.87 (22.2)	0.75 (19.1)	0.56 (14.2)	0.26 (6.6)	5700 (392)
3/4	1/2	-PRB-NS12-RG8	1.63 (41.4)	1.06 (27.0)	0.75 (19.1)	0.74 (18.8)	0.28 (7.1)	3900 (268)

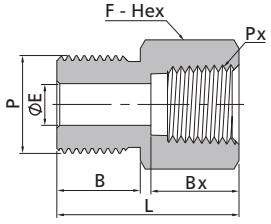

Male ISO Parallel Threads								Female NPT Threads	
P-BP Size	Px-NPT Size	Basic Ordering Number	Dimensions, in. (mm)					Working Pressure psig (bar)	
			L	F	B	Bx	E	316 SS, Steel	Brass
1/4	1/8	-PRB-BP4-NS2	1.06 (26.9)	0.56 (14.3)	0.51 (12.9)	0.41 (10.4)	0.18 (4.5)	6500 (447)	3200 (220)
3/8	1/4	-PRB-BP6-NS4	1.22 (31.0)	0.75 (19.1)	0.56 (14.2)	0.59 (15.0)	0.28 (7.1)	6600 (454)	3300 (227)
1/2	3/8	-PRB-BP8-NS6	1.41 (35.8)	0.87 (22.2)	0.74 (18.8)	0.59 (15.0)	0.26 (6.6)	5300 (365)	2600 (179)

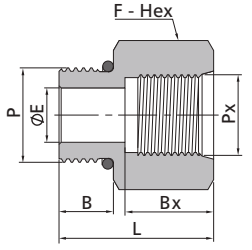

Male SAE/MS Straight Threads (ST)										Female SAE/MS Straight Threads
P-SAE Nominal Size	P-SAE/MS Thread Specification	Px-SAE Nominal Size	Px-SAE/MS Thread Specification	Basic Ordering Number	Dimensions, in. (mm)					Working Pressure psig (bar)
					L	F	B	Bx	E	316 SS, Steel
6	9/16-18	4	7/16-20	-PRB-ST9-US7	1.12 (28.4)	0.81 (20.6)	0.39 (9.9)	0.55 (14.0)	0.28 (7.1)	4500 (310)
8	3/4-16	4	7/16-20	-PRB-ST12-US7	0.98 (24.9)	0.87 (22.2)	0.44 (11.2)	0.55 (14.0)	0.39 (9.9)	4500 (310)
8	3/4-16	6	9/16-18	-PRB-ST12-US9	1.19 (30.2)	1.00 (25.4)	0.44 (11.2)	0.63 (16.0)	0.42 (10.7)	4500 (310)
10	7/8-14	6	9/16-18	-PRB-ST14-US9	1.10 (27.9)	1.00 (25.4)	0.50 (12.7)	0.63 (16.0)	0.50 (12.7)	3600 (248)
10	7/8-14	8	3/4-16	-PRB-ST14-US12	1.42 (36.1)	1.19 (30.2)	0.50 (12.7)	0.71 (18.0)	0.50 (12.7)	3600 (248)
12	1 1/16-12	8	3/4-16	-PRB-ST17-US12	1.27 (32.3)	1.25 (31.8)	0.59 (15.0)	0.71 (18.0)	0.65 (16.5)	3600 (248)
16	1 5/16-12	12	1 1/16-12	-PRB-ST21-US17	1.61 (40.9)	1.63 (41.3)	0.59 (15.0)	0.94 (24.0)	0.87 (22.1)	2900 (199)
20	1 5/8-12	16	1 5/16-12	-PRB-ST26-US21	1.98 (50.3)	2.13 (54.0)	0.59 (15.0)	0.94 (24.0)	1.09 (27.7)	2300 (158)
24	1 7/8-12	16	1 5/16-12	-PRB-ST30-US21	1.27 (32.3)	2.13 (54.0)	0.59 (15.0)	0.94 (24.0)	1.23 (31.2)	2300 (158)

Hex Couplings

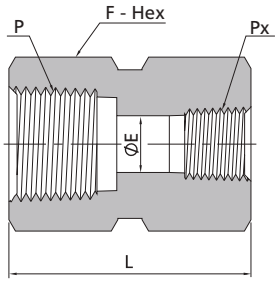

Female NPT Threads

P-NPT Size	Px-NPT Size	Basic Ordering Number	Dimensions, in. (mm)			Working Pressure psig (bar)	
			L	F	E	316 SS, Steel	Brass
1/16	1/16	-PCG-NS1	0.78 (19.8)	0.44 (11.1)	0.19 (4.8)	6700 (460)	3300 (227)
1/8	1/8	-PCG-NS2	0.81 (20.6)	0.56 (14.3)	0.34 (8.6)	6500 (447)	3200 (220)
1/4	1/8	-PCG-NS4-NS2	1.22 (31.0)	0.75 (19.1)	0.34 (8.6)	6600 (454)	3300 (227)
1/4	1/4	-PCG-NS4	1.19 (30.2)	0.75 (19.1)	0.45 (11.4)	6600 (454)	3300 (227)
3/8	1/4	-PCG-NS6-NS4	1.38 (35.1)	0.87 (22.2)	0.45 (11.4)	5300 (365)	2600 (179)
3/8	3/8	-PCG-NS6	1.31 (33.3)	0.87 (22.2)	0.59 (15.0)	5300 (365)	2600 (179)
1/2	1/8	-PCG-NS8-NS2	1.56 (39.6)	1.06 (27.0)	0.34 (8.6)	4900 (337)	2400 (165)
1/2	1/4	-PCG-NS8-NS4	1.75 (44.4)	1.06 (27.0)	0.45 (11.4)	4900 (337)	2400 (165)
1/2	3/8	-PCG-NS8-NS6	1.78 (45.2)	1.06 (27.0)	0.59 (15.0)	4900 (337)	2400 (165)
1/2	1/2	-PCG-NS8	1.56 (39.6)	1.06 (27.0)	0.73 (18.5)	4900 (337)	2400 (165)
3/4	1/4	-PCG-NS12-NS4	1.81 (46.0)	1.31 (33.3)	0.45 (11.4)	4600 (316)	2300 (158)
3/4	1/2	-PCG-NS12-NS8	2.06 (52.3)	1.31 (33.3)	0.73 (18.5)	4600 (316)	2300 (158)
3/4	3/4	-PCG-NS12	1.62 (41.1)	1.31 (33.3)	0.94 (23.9)	4600 (316)	2300 (158)
1	1/2	-PCG-NS16-NS8	2.19 (55.6)	1.63 (41.3)	0.73 (18.5)	4400 (303)	2200 (151)
1	3/4	-PCG-NS16-NS12	2.25 (57.2)	1.63 (41.3)	0.94 (23.9)	4400 (303)	2200 (151)
1	1	-PCG-NS16	2.00 (50.8)	1.63 (41.3)	1.17 (29.7)	4400 (303)	2200 (151)

Female ISO Tapered Threads

P-RT Size	Px-RT Size	Basic Ordering Number	Dimensions, in. (mm)			Working Pressure psig (bar)	
			L	F	E	316 SS, Steel	Brass
1/8	1/8	-PCG-RT2	0.81 (20.6)	0.56 (14.3)	0.33 (8.4)	6500 (447)	3200 (220)
1/4	1/4	-PCG-RT4	1.19 (30.2)	0.75 (19.1)	0.44 (11.2)	6600 (454)	3300 (227)
3/8	1/4	-PCG-RT6-RT4	1.38 (35.1)	0.87 (22.2)	0.44 (11.2)	5300 (365)	2600 (179)
3/8	3/8	-PCG-RT6	1.31 (33.3)	0.87 (22.2)	0.58 (14.7)	5300 (365)	2600 (179)
1/2	1/4	-PCG-RT8-RT4	1.75 (44.4)	1.06 (27.0)	0.44 (11.2)	4900 (337)	2400 (165)
1/2	3/8	-PCG-RT8-RT6	1.78 (45.2)	1.06 (27.0)	0.58 (14.7)	4900 (337)	2400 (165)
1/2	1/2	-PCG-RT8	1.56 (39.6)	1.06 (27.0)	0.72 (18.3)	4900 (337)	2400 (165)

Union Ball Joints

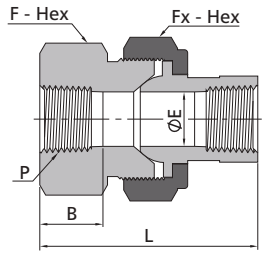

Female NPT Threads

P-NPT Size	Basic Ordering Number	Dimensions, in. (mm)					Working Pressure psig (bar) 316 SS, Steel
		L	F	Fx	B	E	
1/8	-UBJ-NS2	1.81 (46.0)	0.94 (23.8)	1.13 (28.6)	0.41 (10.4)	0.27 (6.8)	8400 (578)
1/4	-UBJ-NS4	2.34 (59.4)	1.19 (30.2)	1.37 (34.9)	0.59 (15.0)	0.36 (9.1)	6600 (454)
3/8	-UBJ-NS6	2.50 (63.5)	1.31 (33.3)	1.50 (38.1)	0.59 (15.0)	0.52 (13.2)	5300 (365)
1/2	-UBJ-NS8	2.69 (68.3)	1.63 (41.3)	1.75 (44.5)	0.78 (19.8)	0.62 (15.7)	6000 (410)
3/4	-UBJ-NS12	3.12 (79.2)	1.87 (47.6)	2.13 (54.0)	0.81 (20.6)	0.88 (22.4)	4600 (316)
1	-UBJ-NS16	3.56 (90.4)	2.37 (60.3)	2.50 (63.5)	1.00 (25.4)	1.03 (26.2)	6800 (468)

Female ISO Tapered Threads

P-RT Size	Basic Ordering Number	Dimensions, in. (mm)					Working Pressure psig (bar) 316 SS, Steel
		L	F	Fx	B	E	
1/8	-UBJ-RT2	1.81 (46.0)	0.94 (23.8)	1.13 (28.6)	0.41 (10.4)	0.27 (6.8)	8400 (578)
1/4	-UBJ-RT4	2.34 (59.4)	1.19 (30.2)	1.37 (34.9)	0.59 (15.0)	0.36 (9.1)	6600 (454)
3/8	-UBJ-RT6	2.50 (63.5)	1.31 (33.3)	1.50 (38.1)	0.59 (15.0)	0.52 (13.2)	5300 (365)
1/2	-UBJ-RT8	2.69 (68.3)	1.63 (41.3)	1.75 (44.5)	0.78 (19.8)	0.62 (15.7)	6000 (410)
3/4	-UBJ-RT12	3.12 (79.2)	1.87 (47.6)	2.13 (54.0)	0.81 (20.6)	0.88 (22.4)	4600 (316)
1	-UBJ-RT16	3.56 (90.4)	2.37 (60.3)	2.50 (63.5)	1.00 (25.4)	1.03 (26.2)	6800 (468)

Male Elbows

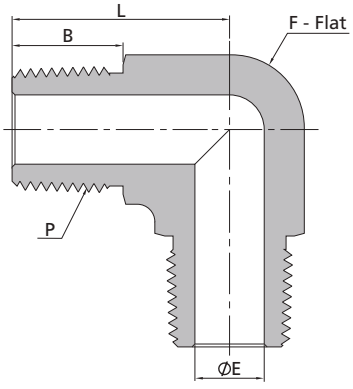

Male NPT Threads

P-NPT Size	Basic Ordering Number	Dimensions, in. (mm)				Working Pressure psig (bar)	
		L	F	B	E	316 SS, Steel	Brass
1/16	-PME-NS1	0.67 (17.0)	0.37 (9.5)	0.38 (9.7)	0.12 (3.0)	11000 (757)	5500 (378)
1/8	-PME-NS2	0.88 (22.4)	0.44 (11.1)	0.38 (9.7)	0.19 (4.8)	10000 (690)	5000 (344)
1/4	-PME-NS4	1.05 (26.7)	0.50 (12.7)	0.56 (14.2)	0.28 (7.1)	8000 (551)	4000 (275)
3/8	-PME-NS6	1.17 (29.7)	0.69 (17.5)	0.56 (14.2)	0.38 (9.6)	7800 (537)	3900 (268)
1/2	-PME-NS8	1.45 (36.8)	0.81 (20.6)	0.75 (19.1)	0.47 (11.9)	7700 (530)	3800 (261)
3/4	-PME-NS12	1.59 (40.4)	1.06 (27.0)	0.75 (19.1)	0.62 (15.7)	7300 (502)	3600 (248)
1	-PME-NS16	1.97 (50.0)	1.37 (34.9)	0.94 (23.9)	0.88 (22.4)	5300 (365)	2600 (179)

Male ISO Tapered Threads							
P-RT Size	Basic Ordering Number	Dimensions, in. (mm)				Working Pressure psig (bar)	
		L	F	B	E	316 SS, Steel	Brass
1/16	-PME-RT1	0.67 (17.0)	0.37 (9.5)	0.38 (9.7)	0.12 (3.0)	11000 (757)	5500 (378)
1/8	-PME-RT2	0.88 (22.4)	0.44 (11.1)	0.38 (9.7)	0.19 (4.8)	10000 (690)	5000 (344)
1/4	-PME-RT4	1.05 (26.7)	0.50 (12.7)	0.56 (14.2)	0.28 (7.1)	8000 (551)	4000 (275)
3/8	-PME-RT6	1.17 (29.7)	0.69 (17.5)	0.56 (14.2)	0.38 (9.6)	7800 (537)	3900 (268)
1/2	-PME-RT8	1.45 (36.8)	0.81 (20.6)	0.75 (19.1)	0.47 (11.9)	7700 (530)	3800 (261)
3/4	-PME-RT12	1.59 (40.4)	1.06 (27.0)	0.75 (19.1)	0.62 (15.7)	7300 (502)	3600 (248)
1	-PME-RT16	1.97 (50.0)	1.37 (34.9)	0.94 (23.9)	0.88 (22.4)	5300 (365)	2600 (179)

Street Elbows

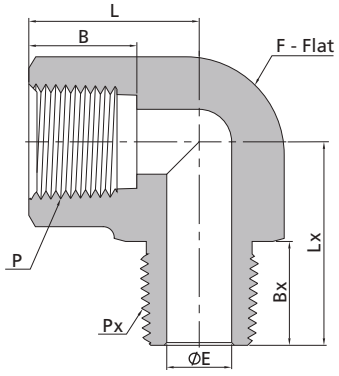

Female NPT Threads									Male NPT Threads	
P-NPT Size	Px-NPT Size	Basic Ordering Number	Dimensions, in. (mm)						Working Pressure psig (bar)	
			L	F	B	E	Lx	Bx	316 SS, Steel	Brass
1/16	1/16	-PSE-NS1	0.86 (21.8)	0.44 (11.1)	0.39 (9.9)	0.12 (3.0)	0.88 (22.4)	0.38 (9.7)	9200 (633)	4600 (316)
1/16	1/8	-PSE-NS1-NS2	0.86 (21.8)	0.44 (11.1)	0.39 (9.9)	0.19 (4.8)	0.88 (22.4)	0.38 (9.7)	9200 (633)	4600 (316)
1/16	1/4	-PSE-NS1-NS4	0.88 (22.4)	0.56 (14.3)	0.39 (9.9)	0.19 (4.8)	1.09 (27.7)	0.56 (14.2)	8000 (551)	4000 (275)
1/16	3/8	-PSE-NS1-NS6	0.88 (22.4)	0.69 (17.5)	0.39 (9.9)	0.19 (4.8)	1.17 (29.7)	0.56 (14.2)	7800 (537)	3900 (268)
1/8	1/16	-PSE-NS2-NS1	1.04 (26.4)	0.50 (12.7)	0.41 (10.4)	0.12 (3.0)	0.87 (22.1)	0.38 (9.7)	6200 (426)	3100 (213)
1/8	1/8	-PSE-NS2	1.04 (26.4)	0.50 (12.7)	0.41 (10.4)	0.19 (4.8)	0.87 (22.1)	0.38 (9.7)	6200 (426)	3100 (213)
1/8	1/4	-PSE-NS2-NS4	0.88 (22.4)	0.56 (14.3)	0.41 (10.4)	0.28 (7.1)	1.09 (27.7)	0.56 (14.2)	6500 (447)	3200 (220)
1/8	3/8	-PSE-NS2-NS6	0.88 (22.4)	0.69 (17.5)	0.41 (10.4)	0.28 (7.1)	1.17 (29.7)	0.56 (14.2)	7800 (537)	3900 (268)
1/8	1/2	-PSE-NS2-NS8	0.95 (24.1)	0.81 (20.6)	0.41 (10.4)	0.28 (7.1)	1.45 (36.8)	0.75 (19.1)	7700 (530)	3800 (261)
1/8	3/4	-PSE-NS2-NS12	1.00 (25.4)	1.06 (27.0)	0.41 (10.4)	0.28 (7.1)	1.59 (40.4)	0.75 (19.1)	7300 (502)	3600 (248)
1/8	1	-PSE-NS2-NS16	1.04 (26.4)	1.37 (34.9)	0.41 (10.4)	0.28 (7.1)	1.97 (50.0)	0.94 (23.9)	5300 (365)	2600 (179)
1/4	1/8	-PSE-NS4-NS2	1.17 (29.7)	0.69 (17.5)	0.59 (15.0)	0.19 (4.8)	1.00 (25.4)	0.38 (9.7)	7200 (496)	3600 (248)
1/4	1/4	-PSE-NS4	1.17 (29.7)	0.69 (17.5)	0.59 (15.0)	0.28 (7.1)	1.17 (29.7)	0.56 (14.2)	7200 (496)	3600 (248)
1/4	3/8	-PSE-NS4-NS6	1.17 (29.7)	0.69 (17.5)	0.59 (15.0)	0.34 (8.6)	1.17 (29.7)	0.56 (14.2)	7200 (496)	3600 (248)
1/4	1/2	-PSE-NS4-NS8	1.00 (25.4)	0.81 (20.6)	0.59 (15.0)	0.34 (8.6)	1.45 (36.8)	0.75 (19.1)	7200 (496)	3600 (248)
1/4	3/4	-PSE-NS4-NS12	1.00 (25.4)	1.06 (27.0)	0.59 (15.0)	0.34 (8.6)	1.59 (40.4)	0.75 (19.1)	7300 (502)	3600 (248)
1/4	1	-PSE-NS4-NS16	1.63 (41.4)	1.37 (34.9)	0.59 (15.0)	0.34 (8.6)	1.97 (50.0)	0.94 (23.9)	5300 (365)	2600 (179)
3/8	1/4	-PSE-NS6-NS4	1.42 (36.1)	0.81 (20.6)	0.59 (15.0)	0.28 (7.1)	1.26 (32.0)	0.56 (14.2)	5600 (385)	2800 (192)
3/8	3/8	-PSE-NS6	1.42 (36.1)	0.81 (20.6)	0.59 (15.0)	0.38 (9.6)	1.26 (32.0)	0.56 (14.2)	5600 (385)	2800 (192)
3/8	1/2	-PSE-NS6-NS8	1.42 (36.1)	0.81 (20.6)	0.59 (15.0)	0.47 (11.9)	1.45 (36.8)	0.75 (19.1)	5600 (385)	2800 (192)
3/8	3/4	-PSE-NS6-NS12	1.23 (31.2)	1.06 (27.0)	0.59 (15.0)	0.47 (11.9)	1.59 (40.4)	0.75 (19.1)	7300 (502)	3600 (248)
3/8	1	-PSE-NS6-NS16	1.63 (41.4)	1.37 (34.9)	0.59 (15.0)	0.47 (11.9)	1.97 (50.0)	0.94 (23.9)	5300 (365)	2600 (179)
1/2	1/4	-PSE-NS8-NS4	1.56 (39.6)	1.00 (25.4)	0.78 (19.8)	0.28 (7.1)	1.38 (35.1)	0.56 (14.2)	5600 (385)	2800 (192)
1/2	3/8	-PSE-NS8-NS6	1.56 (39.6)	1.00 (25.4)	0.78 (19.8)	0.38 (9.6)	1.38 (35.1)	0.56 (14.2)	5600 (385)	2800 (192)
1/2	1/2	-PSE-NS8	1.56 (39.6)	1.00 (25.4)	0.78 (19.8)	0.47 (11.9)	1.56 (39.6)	0.75 (19.1)	5600 (385)	2800 (192)
1/2	3/4	-PSE-NS8-NS12	1.23 (31.2)	1.06 (27.0)	0.78 (19.8)	0.62 (15.7)	1.59 (40.4)	0.75 (19.1)	5600 (385)	2800 (192)
1/2	1	-PSE-NS8-NS16	1.63 (41.4)	1.37 (34.9)	0.78 (19.8)	0.62 (15.7)	1.97 (50.0)	0.94 (23.9)	5300 (365)	2600 (179)
3/4	3/4	-PSE-NS12	1.92 (48.8)	1.25 (31.8)	0.81 (20.6)	0.62 (15.7)	1.67 (42.4)	0.75 (19.1)	5100 (351)	2500 (172)
3/4	1	-PSE-NS12-NS16	1.63 (41.4)	1.37 (34.9)	0.81 (20.6)	0.88 (22.4)	1.97 (50.0)	0.94 (23.9)	5100 (351)	2500 (172)
1	1	-PSE-NS16	1.91 (48.5)	1.69 (42.9)	1.00 (25.4)	0.88 (22.4)	1.94 (49.3)	0.94 (23.9)	5300 (365)	2600 (179)
1 1/4	1 1/4	-PSE-NS20	2.38 (60.5)	2.00 (50.8)	1.00 (25.4)	1.25 (31.8)	2.38 (60.5)	0.94 (23.9)	3100 (213)	1600 (110)

Street Elbows

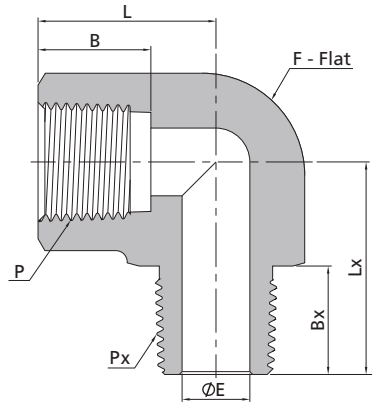

Female ISO Tapered Threads									Male ISO Tapered Threads	
P-RT Size	Px-RT Size	Basic Ordering Number	Dimensions, in. (mm)						Working Pressure psig (bar)	
			L	F	B	E	Lx	Bx	316 SS, Steel	Brass
1/16	1/16	-PSE-RT1	0.86 (21.8)	0.44 (11.1)	0.39 (9.9)	0.12 (3.0)	0.88 (22.4)	0.38 (9.7)	9200 (633)	4600 (316)
1/16	1/8	-PSE-RT1-RT2	0.86 (21.8)	0.44 (11.1)	0.39 (9.9)	0.19 (4.8)	0.88 (22.4)	0.38 (9.7)	9200 (633)	4600 (316)
1/16	1/4	-PSE-RT1-RT4	0.88 (22.4)	0.56 (14.3)	0.39 (9.9)	0.19 (4.8)	1.09 (27.7)	0.56 (14.2)	8000 (551)	4000 (275)
1/16	3/8	-PSE-RT1-RT6	0.88 (22.4)	0.69 (17.5)	0.39 (9.9)	0.19 (4.8)	1.17 (29.7)	0.56 (14.2)	7800 (537)	3900 (268)
1/8	1/16	-PSE-RT2-RT1	1.04 (26.4)	0.50 (12.7)	0.41 (10.4)	0.12 (3.0)	0.87 (22.1)	0.38 (9.7)	6200 (426)	3100 (213)
1/8	1/8	-PSE-RT2	1.04 (26.4)	0.50 (12.7)	0.41 (10.4)	0.19 (4.8)	0.87 (22.1)	0.38 (9.7)	6200 (426)	3100 (213)
1/8	1/4	-PSE-RT2-RT4	0.88 (22.4)	0.56 (14.3)	0.41 (10.4)	0.28 (7.1)	1.09 (27.7)	0.56 (14.2)	6500 (447)	3200 (220)
1/8	3/8	-PSE-RT2-RT6	0.88 (22.4)	0.69 (17.5)	0.41 (10.4)	0.28 (7.1)	1.17 (29.7)	0.56 (14.2)	7800 (537)	3900 (268)
1/8	1/2	-PSE-RT2-RT8	0.95 (24.1)	0.81 (20.6)	0.41 (10.4)	0.28 (7.1)	1.45 (36.8)	0.75 (19.1)	7700 (530)	3800 (261)
1/8	3/4	-PSE-RT2-RT12	1.00 (25.4)	1.06 (27.0)	0.41 (10.4)	0.28 (7.1)	1.59 (40.4)	0.75 (19.1)	7300 (502)	3600 (248)
1/8	1	-PSE-RT2-RT16	1.04 (26.4)	1.37 (34.9)	0.41 (10.4)	0.28 (7.1)	1.97 (50.0)	0.94 (23.9)	5300 (365)	2600 (179)
1/4	1/8	-PSE-RT4-RT2	1.17 (29.7)	0.69 (17.5)	0.59 (15.0)	0.19 (4.8)	1.00 (25.4)	0.38 (9.7)	7200 (496)	3600 (248)
1/4	1/4	-PSE-RT4	1.17 (29.7)	0.69 (17.5)	0.59 (15.0)	0.28 (7.1)	1.17 (29.7)	0.56 (14.2)	7200 (496)	3600 (248)
1/4	3/8	-PSE-RT4-RT6	1.17 (29.7)	0.69 (17.5)	0.59 (15.0)	0.34 (8.6)	1.17 (29.7)	0.56 (14.2)	7200 (496)	3600 (248)
1/4	1/2	-PSE-RT4-RT8	1.00 (25.4)	0.81 (20.6)	0.59 (15.0)	0.34 (8.6)	1.45 (36.8)	0.75 (19.1)	7200 (496)	3600 (248)
1/4	3/4	-PSE-RT4-RT12	1.00 (25.4)	1.06 (27.0)	0.59 (15.0)	0.34 (8.6)	1.59 (40.4)	0.75 (19.1)	7300 (502)	3600 (248)
1/4	1	-PSE-RT4-RT16	1.63 (41.4)	1.37 (34.9)	0.59 (15.0)	0.34 (8.6)	1.97 (50.0)	0.94 (23.9)	5300 (365)	2600 (179)
3/8	1/4	-PSE-RT6-RT4	1.42 (36.1)	0.81 (20.6)	0.59 (15.0)	0.28 (7.1)	1.26 (32.0)	0.56 (14.2)	5600 (385)	2800 (192)
3/8	3/8	-PSE-RT6	1.42 (36.1)	0.81 (20.6)	0.59 (15.0)	0.38 (9.6)	1.26 (32.0)	0.56 (14.2)	5600 (385)	2800 (192)
3/8	1/2	-PSE-RT6-RT8	1.42 (36.1)	0.81 (20.6)	0.59 (15.0)	0.47 (11.9)	1.45 (36.8)	0.75 (19.1)	5600 (385)	2800 (192)
3/8	3/4	-PSE-RT6-RT12	1.23 (31.2)	1.06 (27.0)	0.59 (15.0)	0.47 (11.9)	1.59 (40.4)	0.75 (19.1)	7300 (502)	3600 (248)
3/8	1	-PSE-RT6-RT16	1.63 (41.4)	1.37 (34.9)	0.59 (15.0)	0.47 (11.9)	1.97 (50.0)	0.94 (23.9)	5300 (365)	2600 (179)
1/2	1/4	-PSE-RT8-RT4	1.56 (39.6)	1.00 (25.4)	0.78 (19.8)	0.28 (7.1)	1.38 (35.1)	0.56 (14.2)	5600 (385)	2800 (192)
1/2	3/8	-PSE-RT8-RT6	1.56 (39.6)	1.00 (25.4)	0.78 (19.8)	0.38 (9.6)	1.38 (35.1)	0.56 (14.2)	5600 (385)	2800 (192)
1/2	1/2	-PSE-RT8	1.56 (39.6)	1.00 (25.4)	0.78 (19.8)	0.47 (11.9)	1.56 (39.6)	0.75 (19.1)	5600 (385)	2800 (192)
1/2	3/4	-PSE-RT8-RT12	1.23 (31.2)	1.06 (27.0)	0.78 (19.8)	0.62 (15.7)	1.59 (40.4)	0.75 (19.1)	5600 (385)	2800 (192)
1/2	1	-PSE-RT8-RT16	1.63 (41.4)	1.37 (34.9)	0.78 (19.8)	0.62 (15.7)	1.97 (50.0)	0.94 (23.9)	5300 (365)	2600 (179)
3/4	3/4	-PSE-RT12	1.92 (48.8)	1.25 (31.8)	0.81 (20.6)	0.62 (15.7)	1.67 (42.4)	0.75 (19.1)	5100 (351)	2500 (172)
3/4	1	-PSE-RT12-RT16	1.63 (41.4)	1.37 (34.9)	0.81 (20.6)	0.88 (22.4)	1.97 (50.0)	0.94 (23.9)	5100 (351)	2500 (172)
1	1	-PSE-RT16	1.91 (48.5)	1.69 (42.9)	1.00 (25.4)	0.88 (22.4)	1.94 (49.3)	0.94 (23.9)	5300 (365)	2600 (179)
1 1/4	1 1/4	-PSE-RT20	2.38 (60.5)	2.00 (50.8)	1.00 (25.4)	1.25 (31.8)	2.38 (60.5)	0.94 (23.9)	3100 (213)	1600 (110)

45° Street Elbows

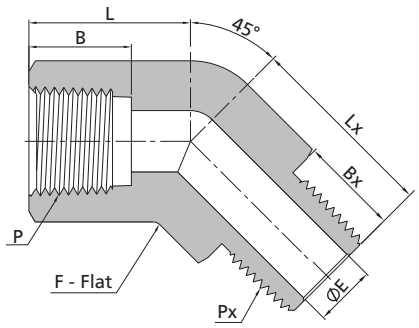

Female NPT Threads									Male NPT Threads	
P-NPT Size	Px-NPT Size	Basic Ordering Number	Dimensions, in. (mm)						Working Pressure psig (bar)	
			L	F	B	E	Lx	Bx	316 SS, Steel	Brass
1/16	1/16	-PSV-NS1	0.66 (16.8)	0.44 (11.1)	0.39 (9.9)	0.12 (3.0)	0.66 (16.8)	0.38 (9.7)	9200 (633)	4600 (316)
1/16	1/8	-PSV-NS1-NS2	0.66 (16.8)	0.44 (11.1)	0.39 (9.9)	0.19 (4.8)	0.66 (16.8)	0.38 (9.7)	9200 (633)	4600 (316)
1/16	1/4	-PSV-NS1-NS4	0.66 (16.8)	0.56 (14.3)	0.39 (9.9)	0.19 (4.8)	0.86 (21.8)	0.56 (14.2)	8000 (551)	4000 (275)
1/16	3/8	-PSV-NS1-NS6	0.88 (22.4)	0.69 (17.5)	0.39 (9.9)	0.19 (4.8)	0.94 (23.8)	0.56 (14.2)	7800 (537)	3900 (268)
1/8	1/16	-PSV-NS2-NS1	0.80 (20.2)	0.50 (12.7)	0.41 (10.4)	0.12 (3.0)	0.68 (17.2)	0.38 (9.7)	6200 (426)	3100 (213)
1/8	1/8	-PSV-NS2	0.80 (20.2)	0.50 (12.7)	0.41 (10.4)	0.19 (4.8)	0.68 (17.2)	0.38 (9.7)	6200 (426)	3100 (213)
1/8	1/4	-PSV-NS2-NS4	0.66 (16.8)	0.56 (14.3)	0.41 (10.4)	0.28 (7.1)	0.86 (21.8)	0.56 (14.2)	6500 (447)	3200 (220)
1/8	3/8	-PSV-NS2-NS6	0.88 (22.4)	0.69 (17.5)	0.41 (10.4)	0.28 (7.1)	0.94 (23.8)	0.56 (14.2)	7800 (537)	3900 (268)
1/8	1/2	-PSV-NS2-NS8	0.87 (22.2)	0.81 (20.6)	0.41 (10.4)	0.28 (7.1)	1.14 (29.0)	0.75 (19.1)	7700 (530)	3800 (261)
1/8	3/4	-PSV-NS2-NS12	1.00 (25.4)	1.06 (27.0)	0.41 (10.4)	0.28 (7.1)	1.20 (30.5)	0.75 (19.1)	7300 (502)	3600 (248)
1/8	1	-PSV-NS2-NS16	1.04 (26.4)	1.37 (34.9)	0.41 (10.4)	0.28 (7.1)	1.94 (49.3)	0.94 (23.9)	5300 (365)	2600 (179)
1/4	1/8	-PSV-NS4-NS2	1.00 (25.4)	0.69 (17.5)	0.59 (15.0)	0.19 (4.8)	0.76 (19.3)	0.38 (9.7)	7200 (496)	3600 (248)
1/4	1/4	-PSV-NS4	1.00 (25.4)	0.69 (17.5)	0.59 (15.0)	0.28 (7.1)	0.76 (19.3)	0.56 (14.2)	7200 (496)	3600 (248)
1/4	3/8	-PSV-NS4-NS6	1.00 (25.4)	0.69 (17.5)	0.59 (15.0)	0.34 (8.6)	0.94 (23.8)	0.56 (14.2)	7200 (496)	3600 (248)
1/4	1/2	-PSV-NS4-NS8	0.87 (22.2)	0.81 (20.6)	0.59 (15.0)	0.34 (8.6)	1.14 (29.0)	0.75 (19.1)	7200 (496)	3600 (248)
1/4	3/4	-PSV-NS4-NS12	1.00 (25.4)	1.06 (27.0)	0.59 (15.0)	0.34 (8.6)	1.20 (30.5)	0.75 (19.1)	7300 (502)	3600 (248)
1/4	1	-PSV-NS4-NS16	1.26 (32.0)	1.37 (34.9)	0.59 (15.0)	0.34 (8.6)	1.48 (37.6)	0.94 (23.9)	5300 (365)	2600 (179)
3/8	1/4	-PSV-NS6-NS4	1.06 (27.0)	0.81 (20.6)	0.59 (15.0)	0.28 (7.1)	0.95 (24.2)	0.56 (14.2)	5600 (385)	2800 (192)
3/8	3/8	-PSV-NS6	1.06 (27.0)	0.81 (20.6)	0.59 (15.0)	0.38 (9.6)	0.95 (24.2)	0.56 (14.2)	5600 (385)	2800 (192)
3/8	1/2	-PSV-NS6-NS8	1.06 (27.0)	0.81 (20.6)	0.59 (15.0)	0.47 (11.9)	1.14 (29.0)	0.75 (19.1)	5600 (385)	2800 (192)
3/8	3/4	-PSV-NS6-NS12	1.06 (27.0)	1.06 (27.0)	0.59 (15.0)	0.47 (11.9)	1.20 (30.5)	0.75 (19.1)	7300 (502)	3600 (248)
3/8	1	-PSV-NS6-NS16	1.26 (32.0)	1.37 (34.9)	0.59 (15.0)	0.47 (11.9)	1.48 (37.6)	0.94 (23.9)	5300 (365)	2600 (179)
1/2	1/4	-PSV-NS8-NS4	1.26 (32.0)	1.00 (25.4)	0.78 (19.8)	0.28 (7.1)	0.99 (25.2)	0.56 (14.2)	5600 (385)	2800 (192)
1/2	3/8	-PSV-NS8-NS6	1.26 (32.0)	1.00 (25.4)	0.78 (19.8)	0.38 (9.6)	0.99 (25.2)	0.56 (14.2)	5600 (385)	2800 (192)
1/2	1/2	-PSV-NS8	1.26 (32.0)	1.00 (25.4)	0.78 (19.8)	0.47 (11.9)	1.26 (32.0)	0.75 (19.1)	5600 (385)	2800 (192)
1/2	3/4	-PSV-NS8-NS12	1.28 (32.5)	1.06 (27.0)	0.78 (19.8)	0.62 (15.7)	1.20 (30.5)	0.75 (19.1)	5600 (385)	2800 (192)
1/2	1	-PSV-NS8-NS16	1.48 (37.6)	1.37 (34.9)	0.78 (19.8)	0.62 (15.7)	1.48 (37.6)	0.94 (23.9)	5300 (365)	2600 (179)
3/4	3/4	-PSV-NS12	1.36 (34.5)	1.25 (31.8)	0.81 (20.6)	0.62 (15.7)	1.36 (34.5)	0.75 (19.1)	5100 (351)	2500 (172)
3/4	1	-PSV-NS12-NS16	1.48 (37.6)	1.37 (34.9)	0.81 (20.6)	0.88 (22.4)	1.48 (37.6)	0.94 (23.9)	5100 (351)	2500 (172)
1	1	-PSV-NS16	1.81 (46.0)	1.69 (42.9)	1.00 (25.4)	0.88 (22.4)	1.81 (46.0)	0.94 (23.9)	5300 (365)	2600 (179)
1 1/4	1 1/4	-PSV-NS20	2.00 (50.8)	2.00 (50.8)	1.00 (25.4)	1.25 (31.8)	2.00 (50.8)	0.94 (23.9)	3100 (213)	1600 (110)

45° Street Elbows

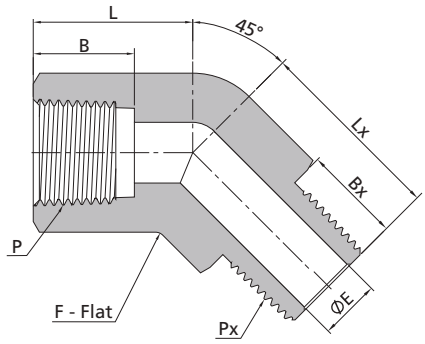

Female ISO Tapered Threads									Male ISO Tapered Threads	
P-RT Size	Px-RT Size	Basic Ordering Number	Dimensions, in. (mm)						Working Pressure psig (bar)	
			L	F	B	E	Lx	Bx	316 SS, Steel	Brass
1/16	1/16	-PSV-RT1	0.66 (16.8)	0.44 (11.1)	0.39 (9.9)	0.12 (3.0)	0.66 (16.8)	0.38 (9.7)	9200 (633)	4600 (316)
1/16	1/8	-PSV-RT1-RT2	0.66 (16.8)	0.44 (11.1)	0.39 (9.9)	0.19 (4.8)	0.66 (16.8)	0.38 (9.7)	9200 (633)	4600 (316)
1/16	1/4	-PSV-RT1-RT4	0.66 (16.8)	0.56 (14.3)	0.39 (9.9)	0.19 (4.8)	0.86 (21.8)	0.56 (14.2)	8000 (551)	4000 (275)
1/16	3/8	-PSV-RT1-RT6	0.88 (22.4)	0.69 (17.5)	0.39 (9.9)	0.19 (4.8)	0.94 (23.8)	0.56 (14.2)	7800 (537)	3900 (268)
1/8	1/16	-PSV-RT2-RT1	0.80 (20.2)	0.50 (12.7)	0.41 (10.4)	0.12 (3.0)	0.68 (17.2)	0.38 (9.7)	6200 (426)	3100 (213)
1/8	1/8	-PSV-RT2	0.80 (20.2)	0.50 (12.7)	0.41 (10.4)	0.19 (4.8)	0.68 (17.2)	0.38 (9.7)	6200 (426)	3100 (213)
1/8	1/4	-PSV-RT2-RT4	0.66 (16.8)	0.56 (14.3)	0.41 (10.4)	0.28 (7.1)	0.86 (21.8)	0.56 (14.2)	6500 (447)	3200 (220)
1/8	3/8	-PSV-RT2-RT6	0.88 (22.4)	0.69 (17.5)	0.41 (10.4)	0.28 (7.1)	0.94 (23.8)	0.56 (14.2)	7800 (537)	3900 (268)
1/8	1/2	-PSV-RT2-RT8	0.87 (22.2)	0.81 (20.6)	0.41 (10.4)	0.28 (7.1)	1.14 (29.0)	0.75 (19.1)	7700 (530)	3800 (261)
1/8	3/4	-PSV-RT2-RT12	1.00 (25.4)	1.06 (27.0)	0.41 (10.4)	0.28 (7.1)	1.20 (30.5)	0.75 (19.1)	7300 (502)	3600 (248)
1/8	1	-PSV-RT2-RT16	1.04 (26.4)	1.37 (34.9)	0.41 (10.4)	0.28 (7.1)	1.94 (49.3)	0.94 (23.9)	5300 (365)	2600 (179)
1/4	1/8	-PSV-RT4-RT2	1.00 (25.4)	0.69 (17.5)	0.59 (15.0)	0.19 (4.8)	0.76 (19.3)	0.38 (9.7)	7200 (496)	3600 (248)
1/4	1/4	-PSV-RT4	1.00 (25.4)	0.69 (17.5)	0.59 (15.0)	0.28 (7.1)	0.76 (19.3)	0.56 (14.2)	7200 (496)	3600 (248)
1/4	3/8	-PSV-RT4-RT6	1.00 (25.4)	0.69 (17.5)	0.59 (15.0)	0.34 (8.6)	0.94 (23.8)	0.56 (14.2)	7200 (496)	3600 (248)
1/4	1/2	-PSV-RT4-RT8	0.87 (22.2)	0.81 (20.6)	0.59 (15.0)	0.34 (8.6)	1.14 (29.0)	0.75 (19.1)	7200 (496)	3600 (248)
1/4	3/4	-PSV-RT4-RT12	1.00 (25.4)	1.06 (27.0)	0.59 (15.0)	0.34 (8.6)	1.20 (30.5)	0.75 (19.1)	7300 (502)	3600 (248)
1/4	1	-PSV-RT4-RT16	1.26 (32.0)	1.37 (34.9)	0.59 (15.0)	0.34 (8.6)	1.48 (37.6)	0.94 (23.9)	5300 (365)	2600 (179)
3/8	1/4	-PSV-RT6-RT4	1.06 (27.0)	0.81 (20.6)	0.59 (15.0)	0.28 (7.1)	0.95 (24.2)	0.56 (14.2)	5600 (385)	2800 (192)
3/8	3/8	-PSV-RT6	1.06 (27.0)	0.81 (20.6)	0.59 (15.0)	0.38 (9.6)	0.95 (24.2)	0.56 (14.2)	5600 (385)	2800 (192)
3/8	1/2	-PSV-RT6-RT8	1.06 (27.0)	0.81 (20.6)	0.59 (15.0)	0.47 (11.9)	1.14 (29.0)	0.75 (19.1)	5600 (385)	2800 (192)
3/8	3/4	-PSV-RT6-RT12	1.06 (27.0)	1.06 (27.0)	0.59 (15.0)	0.47 (11.9)	1.20 (30.5)	0.75 (19.1)	7300 (502)	3600 (248)
3/8	1	-PSV-RT6-RT16	1.26 (32.0)	1.37 (34.9)	0.59 (15.0)	0.47 (11.9)	1.48 (37.6)	0.94 (23.9)	5300 (365)	2600 (179)
1/2	1/4	-PSV-RT8-RT4	1.26 (32.0)	1.00 (25.4)	0.78 (19.8)	0.28 (7.1)	0.99 (25.2)	0.56 (14.2)	5600 (385)	2800 (192)
1/2	3/8	-PSV-RT8-RT6	1.26 (32.0)	1.00 (25.4)	0.78 (19.8)	0.38 (9.6)	0.99 (25.2)	0.56 (14.2)	5600 (385)	2800 (192)
1/2	1/2	-PSV-RT8	1.26 (32.0)	1.00 (25.4)	0.78 (19.8)	0.47 (11.9)	1.26 (32.0)	0.75 (19.1)	5600 (385)	2800 (192)
1/2	3/4	-PSV-RT8-RT12	1.28 (32.5)	1.06 (27.0)	0.78 (19.8)	0.62 (15.7)	1.20 (30.5)	0.75 (19.1)	5600 (385)	2800 (192)
1/2	1	-PSV-RT8-RT16	1.48 (37.6)	1.37 (34.9)	0.78 (19.8)	0.62 (15.7)	1.48 (37.6)	0.94 (23.9)	5300 (365)	2600 (179)
3/4	3/4	-PSV-RT12	1.36 (34.5)	1.25 (31.8)	0.81 (20.6)	0.62 (15.7)	1.36 (34.5)	0.75 (19.1)	5100 (351)	2500 (172)
3/4	1	-PSV-RT12-RT16	1.48 (37.6)	1.37 (34.9)	0.81 (20.6)	0.88 (22.4)	1.48 (37.6)	0.94 (23.9)	5100 (351)	2500 (172)
1	1	-PSV-RT16	1.81 (46.0)	1.69 (42.9)	1.00 (25.4)	0.88 (22.4)	1.81 (46.0)	0.94 (23.9)	5300 (365)	2600 (179)
1 1/4	1 1/4	-PSV-RT20	2.00 (50.8)	2.00 (50.8)	1.00 (25.4)	1.25 (31.8)	2.00 (50.8)	0.94 (23.9)	3100 (213)	1600 (110)

Female Elbows

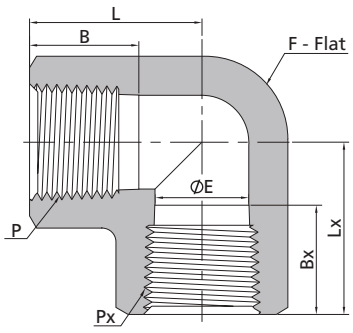

Female NPT Threads

P-NPT Size	Px-NPT Size	Basic Ordering Number	Dimensions, in. (mm)						Working Pressure psig (bar)	
			L	F	B	E	Lx	Bx	316 SS, Steel	Brass
1/16	1/16	-PE-NS1	0.86 (21.8)	0.44 (11.1)	0.39 (9.9)	0.19 (4.8)	0.86 (21.8)	0.39 (9.9)	6700 (460)	3300 (227)
1/8	1/16	-PE-NS2-NS1	1.04 (26.4)	0.50 (12.7)	0.41 (10.4)	0.19 (4.8)	1.04 (26.4)	0.39 (9.9)	6200 (427)	3100 (213)
1/8	1/8	-PE-NS2	1.04 (26.4)	0.50 (12.7)	0.41 (10.4)	0.28 (7.1)	1.04 (26.4)	0.41 (10.4)	6200 (427)	3100 (213)
1/4	1/8	-PE-NS4-NS2	1.17 (29.7)	0.69 (17.5)	0.59 (15.0)	0.28 (7.1)	1.17 (29.7)	0.41 (10.4)	7200 (496)	3600 (248)
1/4	1/4	-PE-NS4	1.17 (29.7)	0.69 (17.5)	0.59 (15.0)	0.41 (10.4)	1.17 (29.7)	0.59 (15.0)	7200 (496)	3600 (248)
3/8	3/8	-PE-NS6	1.42 (36.1)	0.81 (20.6)	0.59 (15.0)	0.50 (12.7)	1.42 (36.1)	0.59 (15.0)	5600 (385)	2800 (192)
1/2	1/2	-PE-NS8	1.56 (39.6)	1.00 (25.4)	0.78 (19.8)	0.67 (17.1)	1.56 (39.6)	0.78 (19.8)	5600 (385)	2800 (192)
3/4	3/4	-PE-NS12	1.92 (48.8)	1.25 (31.8)	0.81 (20.6)	0.88 (22.4)	1.92 (48.8)	0.81 (20.6)	5100 (351)	2500 (172)
1	1	-PE-NS16	1.91 (48.5)	1.69 (42.9)	1.00 (25.4)	1.11 (28.1)	1.91 (48.5)	1.00 (25.4)	6400 (440)	3200 (220)
1 1/4	1 1/4	-PE-NS20	2.35 (59.8)	2.00 (50.8)	1.00 (25.4)	1.09 (27.7)	2.35 (59.8)	1.00 (25.4)	3100 (213)	1600 (110)

Female ISO Tapered Threads

P-RT Size	Px-RT Size	Basic Ordering Number	Dimensions, in. (mm)						Working Pressure psig (bar)	
			L	F	B	E	Lx	Bx	316 SS, Steel	Brass
1/16	1/16	-PE-RT1	0.86 (21.8)	0.44 (11.1)	0.39 (9.9)	0.19 (4.8)	0.86 (21.8)	0.39 (9.9)	6700 (460)	3300 (227)
1/8	1/16	-PE-RT2-RT1	1.04 (26.4)	0.50 (12.7)	0.41 (10.4)	0.19 (4.8)	1.04 (26.4)	0.39 (9.9)	6200 (427)	3100 (213)
1/8	1/8	-PE-RT2	1.04 (26.4)	0.50 (12.7)	0.41 (10.4)	0.28 (7.1)	1.04 (26.4)	0.41 (10.4)	6200 (427)	3100 (213)
1/4	1/8	-PE-RT4-RT2	1.17 (29.7)	0.69 (17.5)	0.59 (15.0)	0.28 (7.1)	1.17 (29.7)	0.41 (10.4)	7200 (496)	3600 (248)
1/4	1/4	-PE-RT4	1.17 (29.7)	0.69 (17.5)	0.59 (15.0)	0.41 (10.4)	1.17 (29.7)	0.59 (15.0)	7200 (496)	3600 (248)
3/8	3/8	-PE-RT6	1.42 (36.1)	0.81 (20.6)	0.59 (15.0)	0.50 (12.7)	1.42 (36.1)	0.59 (15.0)	5600 (385)	2800 (192)
1/2	1/2	-PE-RT8	1.56 (39.6)	1.00 (25.4)	0.78 (19.8)	0.67 (17.1)	1.56 (39.6)	0.78 (19.8)	5600 (385)	2800 (192)
3/4	3/4	-PE-RT12	1.92 (48.8)	1.25 (31.8)	0.81 (20.6)	0.88 (22.4)	1.92 (48.8)	0.81 (20.6)	5100 (351)	2500 (172)
1	1	-PE-RT16	1.91 (48.5)	1.69 (42.9)	1.00 (25.4)	1.11 (28.1)	1.91 (48.5)	1.00 (25.4)	6400 (440)	3200 (220)
1 1/4	1 1/4	-PE-RT20	2.35 (59.8)	2.00 (50.8)	1.00 (25.4)	1.09 (27.7)	2.35 (59.8)	1.00 (25.4)	3100 (213)	1600 (110)

45° Female Elbows

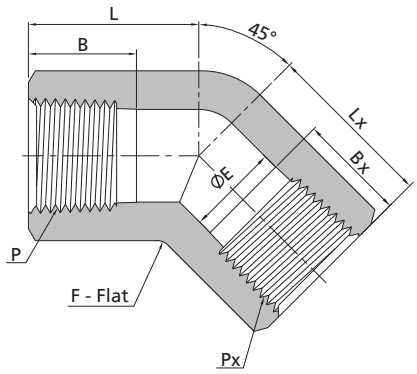

Female NPT Threads

P-NPT Size	Px-NPT Size	Basic Ordering Number	Dimensions, in. (mm)						Working Pressure psig (bar)	
			L	F	B	E	Lx	Bx	316 SS, Steel	Brass
1/16	1/16	-PVE-NS1	0.66 (16.8)	0.44 (11.1)	0.39 (9.9)	0.19 (4.8)	0.66 (16.8)	0.39 (9.9)	6700 (460)	3300 (227)
1/8	1/16	-PVE-NS2-NS1	0.80 (20.2)	0.50 (12.7)	0.41 (10.4)	0.19 (4.8)	0.80 (20.2)	0.39 (9.9)	6200 (427)	3100 (213)
1/8	1/8	-PVE-NS2	0.80 (20.2)	0.50 (12.7)	0.41 (10.4)	0.28 (7.1)	0.80 (20.2)	0.41 (10.4)	6200 (427)	3100 (213)
1/4	1/8	-PVE-NS4-NS2	1.00 (25.4)	0.69 (17.5)	0.59 (15.0)	0.28 (7.1)	1.00 (25.4)	0.41 (10.4)	7200 (496)	3600 (248)
1/4	1/4	-PVE-NS4	1.00 (25.4)	0.69 (17.5)	0.59 (15.0)	0.41 (10.4)	1.00 (25.4)	0.59 (15.0)	7200 (496)	3600 (248)
3/8	3/8	-PVE-NS6	1.06 (27.0)	0.81 (20.6)	0.59 (15.0)	0.50 (12.7)	1.06 (27.0)	0.59 (15.0)	5600 (385)	2800 (192)
1/2	1/2	-PVE-NS8	1.26 (32.0)	1.00 (25.4)	0.78 (19.8)	0.67 (17.1)	1.26 (32.0)	0.78 (19.8)	5600 (385)	2800 (192)
3/4	3/4	-PVE-NS12	1.36 (34.5)	1.25 (31.8)	0.81 (20.6)	0.88 (22.4)	1.36 (34.5)	0.81 (20.6)	5100 (351)	2500 (172)
1	1	-PVE-NS16	2.46 (62.6)	2.00 (50.8)	1.00 (25.4)	1.11 (28.1)	1.81 (46.0)	1.00 (25.4)	6400 (440)	3200 (220)
1 1/4	1 1/4	-PVE-NS20	1.70 (43.2)	2.00 (50.8)	1.00 (25.4)	1.09 (27.7)	1.70 (43.2)	1.00 (25.4)	3100 (213)	1600 (110)

Female ISO Tapered Threads

P-RT Size	Px-RT Size	Basic Ordering Number	Dimensions, in. (mm)						Working Pressure psig (bar)	
			L	F	B	E	Lx	Bx	316 SS, Steel	Brass
1/16	1/16	-PVE-RT1	0.66 (16.8)	0.44 (11.1)	0.39 (9.9)	0.19 (4.8)	0.66 (16.8)	0.39 (9.9)	6700 (460)	3300 (227)
1/8	1/16	-PVE-RT2-RT1	0.80 (20.2)	0.50 (12.7)	0.41 (10.4)	0.19 (4.8)	0.80 (20.2)	0.39 (9.9)	6200 (427)	3100 (213)
1/8	1/8	-PVE-RT2	0.80 (20.2)	0.50 (12.7)	0.41 (10.4)	0.28 (7.1)	0.80 (20.2)	0.41 (10.4)	6200 (427)	3100 (213)
1/4	1/8	-PVE-RT4-RT2	1.00 (25.4)	0.69 (17.5)	0.59 (15.0)	0.28 (7.1)	1.00 (25.4)	0.41 (10.4)	7200 (496)	3600 (248)
1/4	1/4	-PVE-RT4	1.00 (25.4)	0.69 (17.5)	0.59 (15.0)	0.41 (10.4)	1.00 (25.4)	0.59 (15.0)	7200 (496)	3600 (248)
3/8	3/8	-PVE-RT6	1.06 (27.0)	0.81 (20.6)	0.59 (15.0)	0.50 (12.7)	1.06 (27.0)	0.59 (15.0)	5600 (385)	2800 (192)
1/2	1/2	-PVE-RT8	1.26 (32.0)	1.00 (25.4)	0.78 (19.8)	0.67 (17.1)	1.26 (32.0)	0.78 (19.8)	5600 (385)	2800 (192)
3/4	3/4	-PVE-RT12	1.36 (34.5)	1.25 (31.8)	0.81 (20.6)	0.88 (22.4)	1.36 (34.5)	0.81 (20.6)	5100 (351)	2500 (172)
1	1	-PVE-RT16	2.46 (62.6)	2.00 (50.8)	1.00 (25.4)	1.11 (28.1)	1.81 (46.0)	1.00 (25.4)	6400 (440)	3200 (220)
1 1/4	1 1/4	-PVE-RT20	1.70 (43.2)	2.00 (50.8)	1.00 (25.4)	1.09 (27.7)	1.70 (43.2)	1.00 (25.4)	3100 (213)	1600 (110)

Male Tees

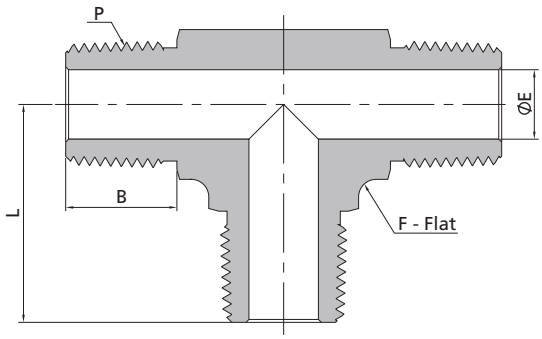

Male NPT Threads

P-NPT Size	Basic Ordering Number	Dimensions, in. (mm)				Working Pressure psig (bar)	
		L	F	B	E	316 SS, Steel	Brass
1/16	-PMT-NS1	0.67 (17.0)	0.37 (9.5)	0.38 (9.7)	0.12 (3.0)	11000 (757)	5500 (378)
1/8	-PMT-NS2	0.88 (22.4)	0.44 (11.1)	0.38 (9.7)	0.19 (4.8)	10000 (690)	5000 (344)
1/4	-PMT-NS4	1.05 (26.7)	0.50 (12.7)	0.56 (14.2)	0.28 (7.1)	8000 (551)	4000 (275)
3/8	-PMT-NS6	1.17 (29.7)	0.69 (17.5)	0.56 (14.2)	0.38 (9.6)	7800 (537)	3900 (268)
1/2	-PMT-NS8	1.45 (36.8)	0.81 (20.6)	0.75 (19.1)	0.47 (11.9)	7700 (530)	3800 (261)
3/4	-PMT-NS12	1.67 (42.4)	1.06 (27.0)	0.75 (19.1)	0.62 (15.7)	7300 (502)	3600 (248)
1	-PMT-NS16	1.94 (49.3)	1.37 (34.9)	0.94 (23.9)	0.88 (22.4)	5300 (365)	2600 (179)

Male ISO Tapered Threads

P-RT Size	Basic Ordering Number	Dimensions, in. (mm)				Working Pressure psig (bar)	
		L	F	B	E	316 SS, Steel	Brass
1/16	-PMT-RT1	0.67 (17.0)	0.37 (9.5)	0.38 (9.7)	0.12 (3.0)	11000 (757)	5500 (378)
1/8	-PMT-RT2	0.88 (22.4)	0.44 (11.1)	0.38 (9.7)	0.19 (4.8)	10000 (690)	5000 (344)
1/4	-PMT-RT4	1.05 (26.7)	0.50 (12.7)	0.56 (14.2)	0.28 (7.1)	8000 (551)	4000 (275)
3/8	-PMT-RT6	1.17 (29.7)	0.69 (17.5)	0.56 (14.2)	0.38 (9.6)	7800 (537)	3900 (268)
1/2	-PMT-RT8	1.45 (36.8)	0.81 (20.6)	0.75 (19.1)	0.47 (11.9)	7700 (530)	3800 (261)
3/4	-PMT-RT12	1.67 (42.4)	1.06 (27.0)	0.75 (19.1)	0.62 (15.7)	7300 (502)	3600 (248)
1	-PMT-RT16	1.94 (49.3)	1.37 (34.9)	0.94 (23.9)	0.88 (22.4)	5300 (365)	2600 (179)

Female Branch Tees

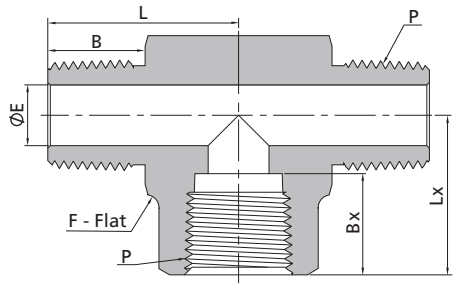

NPT Threads

P-NPT Size	Basic Ordering Number	Dimensions, in. (mm)						Working Pressure psig (bar)	
		L	F	E	B	Lx	Bx	316 SS, Steel	Brass
1/16	-PTB-NS1	0.72 (18.3)	0.44 (11.1)	0.12 (3.0)	0.38 (9.7)	0.86 (21.8)	0.39 (9.9)	9200 (633)	4600 (316)
1/8	-PTB-NS2	0.87 (22.1)	0.50 (12.7)	0.19 (4.8)	0.38 (9.7)	1.04 (26.4)	0.41 (10.4)	6200 (427)	3100 (213)
1/4	-PTB-NS4	1.17 (29.7)	0.69 (17.5)	0.28 (7.1)	0.56 (14.2)	1.17 (29.7)	0.59 (15.0)	7200 (496)	3600 (248)
3/8	-PTB-NS6	1.26 (32.0)	0.81 (20.6)	0.38 (9.6)	0.56 (14.2)	1.42 (36.1)	0.59 (15.0)	5600 (385)	2800 (192)
1/2	-PTB-NS8	1.56 (39.6)	1.00 (25.4)	0.47 (11.9)	0.75 (19.1)	1.56 (39.6)	0.78 (19.8)	5600 (385)	2800 (192)
3/4	-PTB-NS12	1.67 (42.4)	1.25 (31.8)	0.62 (15.7)	0.75 (19.1)	1.92 (48.8)	0.81 (20.6)	5100 (351)	2500 (172)
1	-PTB-NS16	2.05 (52.0)	1.69 (42.9)	0.88 (22.4)	0.94 (23.9)	1.91 (48.5)	1.00 (25.4)	5300 (365)	2600 (179)

ISO Tapered Threads

P-RT Size	Basic Ordering Number	Dimensions, in. (mm)						Working Pressure psig (bar)	
		L	F	E	B	Lx	Bx	316 SS, Steel	Brass
1/16	-PTB-RT1	0.72 (18.3)	0.44 (11.1)	0.12 (3.0)	0.38 (9.7)	0.86 (21.8)	0.39 (9.9)	9200 (633)	4600 (316)
1/8	-PTB-RT2	0.87 (22.1)	0.50 (12.7)	0.19 (4.8)	0.38 (9.7)	1.04 (26.4)	0.41 (10.4)	6200 (427)	3100 (213)
1/4	-PTB-RT4	1.17 (29.7)	0.69 (17.5)	0.28 (7.1)	0.56 (14.2)	1.17 (29.7)	0.59 (15.0)	7200 (496)	3600 (248)
3/8	-PTB-RT6	1.26 (32.0)	0.81 (20.6)	0.38 (9.6)	0.56 (14.2)	1.42 (36.1)	0.59 (15.0)	5600 (385)	2800 (192)
1/2	-PTB-RT8	1.56 (39.6)	1.00 (25.4)	0.47 (11.9)	0.75 (19.1)	1.56 (39.6)	0.78 (19.8)	5600 (385)	2800 (192)
3/4	-PTB-RT12	1.67 (42.4)	1.25 (31.8)	0.62 (15.7)	0.75 (19.1)	1.92 (48.8)	0.81 (20.6)	5100 (351)	2500 (172)
1	-PTB-RT16	2.05 (52.0)	1.69 (42.9)	0.88 (22.4)	0.94 (23.9)	1.91 (48.5)	1.00 (25.4)	5300 (365)	2600 (179)

Female Run Tees

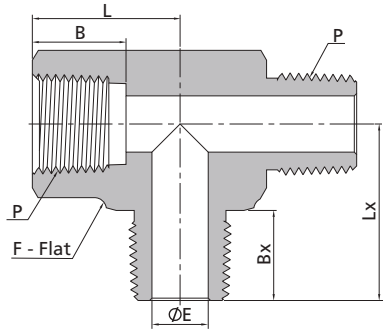

NPT Threads

P-NPT Size	Basic Ordering Number	Dimensions, in. (mm)						Working Pressure psig (bar)	
		L	F	E	B	Lx	Bx	316 SS, Steel	Brass
1/16	-PTR-NS1	0.86 (21.8)	0.44 (11.1)	0.12 (3.0)	0.39 (9.9)	0.72 (18.3)	0.38 (9.7)	9200 (633)	4600 (316)
1/8	-PTR-NS2	1.04 (26.4)	0.50 (12.7)	0.19 (4.8)	0.41 (10.4)	0.87 (22.1)	0.38 (9.7)	6200 (427)	3100 (213)
1/4	-PTR-NS4	1.17 (29.7)	0.69 (17.5)	0.28 (7.1)	0.59 (15.0)	1.17 (29.7)	0.56 (14.2)	7200 (496)	3600 (248)
3/8	-PTR-NS6	1.42 (36.1)	0.81 (20.6)	0.38 (9.6)	0.59 (15.0)	1.26 (32.0)	0.56 (14.2)	5600 (385)	2800 (192)
1/2	-PTR-NS8	1.56 (39.6)	1.00 (25.4)	0.47 (11.9)	0.78 (19.8)	1.56 (39.6)	0.75 (19.1)	5600 (385)	2800 (192)
3/4	-PTR-NS12	1.92 (48.8)	1.25 (31.8)	0.62 (15.7)	0.81 (20.6)	1.67 (42.4)	0.75 (19.1)	5100 (351)	2500 (172)
1	-PTR-NS16	1.91 (48.5)	1.69 (42.9)	0.88 (22.4)	1.00 (25.4)	1.94 (49.3)	0.94 (23.9)	5300 (365)	2600 (179)

ISO Tapered Threads

P-RT Size	Basic Ordering Number	Dimensions, in. (mm)						Working Pressure psig (bar)	
		L	F	E	B	Lx	Bx	316 SS, Steel	Brass
1/16	-PTR-RT1	0.86 (21.8)	0.44 (11.1)	0.12 (3.0)	0.39 (9.9)	0.72 (18.3)	0.38 (9.7)	9200 (633)	4600 (316)
1/8	-PTR-RT2	1.04 (26.4)	0.50 (12.7)	0.19 (4.8)	0.41 (10.4)	0.87 (22.1)	0.38 (9.7)	6200 (427)	3100 (213)
1/4	-PTR-RT4	1.17 (29.7)	0.69 (17.5)	0.28 (7.1)	0.59 (15.0)	1.17 (29.7)	0.56 (14.2)	7200 (496)	3600 (248)
3/8	-PTR-RT6	1.42 (36.1)	0.81 (20.6)	0.38 (9.6)	0.59 (15.0)	1.26 (32.0)	0.56 (14.2)	5600 (385)	2800 (192)
1/2	-PTR-RT8	1.56 (39.6)	1.00 (25.4)	0.47 (11.9)	0.78 (19.8)	1.56 (39.6)	0.75 (19.1)	5600 (385)	2800 (192)
3/4	-PTR-RT12	1.92 (48.8)	1.25 (31.8)	0.62 (15.7)	0.81 (20.6)	1.67 (42.4)	0.75 (19.1)	5100 (351)	2500 (172)
1	-PTR-RT16	1.91 (48.5)	1.69 (42.9)	0.88 (22.4)	1.00 (25.4)	1.94 (49.3)	0.94 (23.9)	5300 (365)	2600 (179)

Male Street Tees

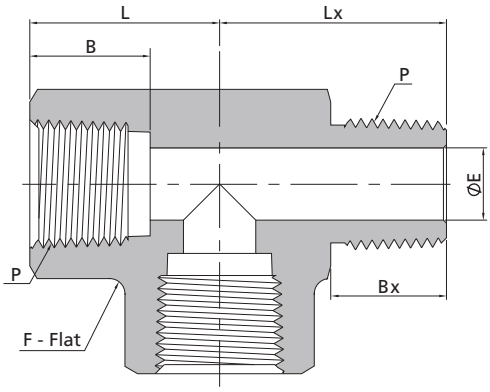

NPT Threads

P-NPT Size	Basic Ordering Number	Dimensions, in. (mm)						Working Pressure psig (bar)	
		L	F	E	B	Lx	Bx	316 SS, Steel	Brass
1/16	-PST-NS1	0.86 (21.8)	0.44 (11.1)	0.12 (3.0)	0.39 (9.9)	0.72 (18.3)	0.38 (9.7)	9200 (633)	4600 (316)
1/8	-PST-NS2	1.04 (26.4)	0.50 (12.7)	0.19 (4.8)	0.41 (10.4)	0.87 (22.1)	0.38 (9.7)	6200 (427)	3100 (213)
1/4	-PST-NS4	1.17 (29.7)	0.69 (17.5)	0.28 (7.1)	0.59 (15.0)	1.17 (29.7)	0.56 (14.2)	7200 (496)	3600 (248)
3/8	-PST-NS6	1.42 (36.1)	0.81 (20.6)	0.38 (9.6)	0.59 (15.0)	1.26 (32.0)	0.56 (14.2)	5600 (385)	2800 (192)
1/2	-PST-NS8	1.56 (39.6)	1.00 (25.4)	0.47 (11.9)	0.78 (19.8)	1.56 (39.6)	0.75 (19.1)	5600 (385)	2800 (192)
3/4	-PST-NS12	1.92 (48.8)	1.25 (31.8)	0.62 (15.7)	0.81 (20.6)	1.67 (42.4)	0.75 (19.1)	5100 (351)	2500 (172)
1	-PST-NS16	1.91 (48.5)	1.69 (42.9)	0.88 (22.4)	1.00 (25.4)	1.94 (49.3)	0.94 (23.9)	5300 (365)	2600 (179)

ISO Tapered Threads

P-RT Size	Basic Ordering Number	Dimensions, in. (mm)						Working Pressure psig (bar)	
		L	F	E	B	Lx	Bx	316 SS, Steel	Brass
1/16	-PST-RT1	0.86 (21.8)	0.44 (11.1)	0.12 (3.0)	0.39 (9.9)	0.72 (18.3)	0.38 (9.7)	9200 (633)	4600 (316)
1/8	-PST-RT2	1.04 (26.4)	0.50 (12.7)	0.19 (4.8)	0.41 (10.4)	0.87 (22.1)	0.38 (9.7)	6200 (427)	3100 (213)
1/4	-PST-RT4	1.17 (29.7)	0.69 (17.5)	0.28 (7.1)	0.59 (15.0)	1.17 (29.7)	0.56 (14.2)	7200 (496)	3600 (248)
3/8	-PST-RT6	1.42 (36.1)	0.81 (20.6)	0.38 (9.6)	0.59 (15.0)	1.26 (32.0)	0.56 (14.2)	5600 (385)	2800 (192)
1/2	-PST-RT8	1.56 (39.6)	1.00 (25.4)	0.47 (11.9)	0.78 (19.8)	1.56 (39.6)	0.75 (19.1)	5600 (385)	2800 (192)
3/4	-PST-RT12	1.92 (48.8)	1.25 (31.8)	0.62 (15.7)	0.81 (20.6)	1.67 (42.4)	0.75 (19.1)	5100 (351)	2500 (172)
1	-PST-RT16	1.91 (48.5)	1.69 (42.9)	0.88 (22.4)	1.00 (25.4)	1.94 (49.3)	0.94 (23.9)	5300 (365)	2600 (179)

Male Branch Tees

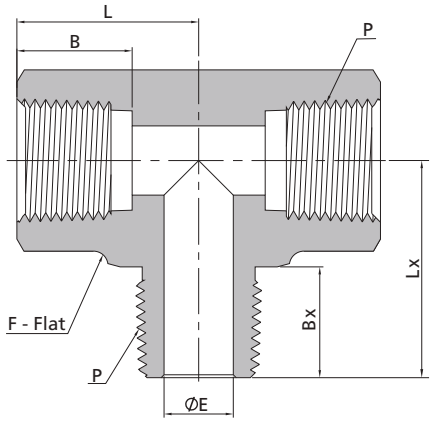

NPT Threads

P-NPT Size	Basic Ordering Number	Dimensions, in. (mm)						Working Pressure psig (bar)	
		L	F	E	B	Lx	Bx	316 SS, Steel	Brass
1/16	-PBT-NS1	0.86 (21.8)	0.44 (11.1)	0.12 (3.0)	0.39 (9.9)	0.72 (18.3)	0.38 (9.7)	9200 (633)	4600 (316)
1/8	-PBT-NS2	1.04 (26.4)	0.50 (12.7)	0.19 (4.8)	0.41 (10.4)	0.87 (22.1)	0.38 (9.7)	6200 (427)	3100 (213)
1/4	-PBT-NS4	1.17 (29.7)	0.69 (17.5)	0.28 (7.1)	0.59 (15.0)	1.17 (29.7)	0.56 (14.2)	7200 (496)	3600 (248)
3/8	-PBT-NS6	1.42 (36.1)	0.81 (20.6)	0.38 (9.6)	0.59 (15.0)	1.26 (32.0)	0.56 (14.2)	5600 (385)	2800 (192)
1/2	-PBT-NS8	1.56 (39.6)	1.00 (25.4)	0.47 (11.9)	0.78 (19.8)	1.56 (39.6)	0.75 (19.1)	5600 (385)	2800 (192)
3/4	-PBT-NS12	1.92 (48.8)	1.25 (31.8)	0.62 (15.7)	0.81 (20.6)	1.67 (42.4)	0.75 (19.1)	5100 (351)	2500 (172)
1	-PBT-NS16	1.91 (48.5)	1.69 (42.9)	0.88 (22.4)	1.00 (25.4)	1.94 (49.3)	0.94 (23.9)	5300 (365)	2600 (179)

ISO Tapered Threads

P-RT Size	Basic Ordering Number	Dimensions, in. (mm)						Working Pressure psig (bar)	
		L	F	E	B	Lx	Bx	316 SS, Steel	Brass
1/16	-PBT-RT1	0.86 (21.8)	0.44 (11.1)	0.12 (3.0)	0.39 (9.9)	0.72 (18.3)	0.38 (9.7)	9200 (633)	4600 (316)
1/8	-PBT-RT2	1.04 (26.4)	0.50 (12.7)	0.19 (4.8)	0.41 (10.4)	0.87 (22.1)	0.38 (9.7)	6200 (427)	3100 (213)
1/4	-PBT-RT4	1.17 (29.7)	0.69 (17.5)	0.28 (7.1)	0.59 (15.0)	1.17 (29.7)	0.56 (14.2)	7200 (496)	3600 (248)
3/8	-PBT-RT6	1.42 (36.1)	0.81 (20.6)	0.38 (9.6)	0.59 (15.0)	1.26 (32.0)	0.56 (14.2)	5600 (385)	2800 (192)
1/2	-PBT-RT8	1.56 (39.6)	1.00 (25.4)	0.47 (11.9)	0.78 (19.8)	1.56 (39.6)	0.75 (19.1)	5600 (385)	2800 (192)
3/4	-PBT-RT12	1.92 (48.8)	1.25 (31.8)	0.62 (15.7)	0.81 (20.6)	1.67 (42.4)	0.75 (19.1)	5100 (351)	2500 (172)
1	-PBT-RT16	1.91 (48.5)	1.69 (42.9)	0.88 (22.4)	1.00 (25.4)	1.94 (49.3)	0.94 (23.9)	5300 (365)	2600 (179)

Female Tees

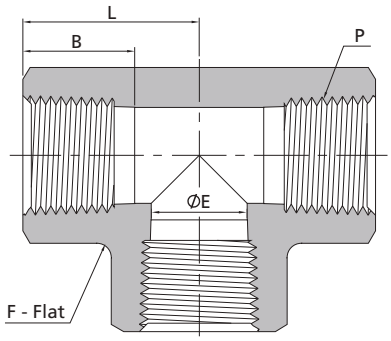

Female NPT Threads

P-NPT Size	Basic Ordering Number	Dimensions, in. (mm)				Working Pressure psig (bar)	
		L	F	E	B	316 SS, Steel	Brass
1/16	-PT-NS1	0.86 (21.8)	0.44 (11.1)	0.19 (4.8)	0.39 (9.9)	6700 (460)	3300 (227)
1/8	-PT-NS2	1.04 (26.4)	0.50 (12.7)	0.34 (8.6)	0.41 (10.4)	6200 (427)	3100 (213)
1/4	-PT-NS4	1.17 (29.7)	0.69 (17.5)	0.45 (11.4)	0.59 (15.0)	7200 (496)	3600 (248)
3/8	-PT-NS6	1.42 (36.1)	0.81 (20.6)	0.59 (15.0)	0.59 (15.0)	5600 (385)	2800 (192)
1/2	-PT-NS8	1.56 (39.6)	1.00 (25.4)	0.73 (18.5)	0.78 (19.8)	5600 (385)	2800 (192)
3/4	-PT-NS12	1.92 (48.8)	1.25 (31.8)	0.94 (23.9)	0.81 (20.6)	5100 (351)	2500 (172)
1	-PT-NS16	1.91 (48.5)	1.69 (42.9)	1.17 (29.7)	1.00 (25.4)	6400 (440)	3200 (220)
1 1/4	-PT-NS20	2.35 (59.8)	2.00 (50.8)	1.46 (37.2)	1.00 (25.4)	3100 (213)	1600 (110)
1 1/2	-PT-NS24	2.56 (65.0)	2.50 (63.5)	1.70 (43.3)	1.09 (27.7)	5100 (351)	2500 (172)

Female ISO Tapered Threads

P-RT Size	Basic Ordering Number	Dimensions, in. (mm)				Working Pressure psig (bar)	
		L	F	E	B	316 SS, Steel	Brass
1/16	-PT-RT1	0.86 (21.8)	0.44 (11.1)	0.19 (4.8)	0.39 (9.9)	6700 (460)	3300 (227)
1/8	-PT-RT2	1.04 (26.4)	0.50 (12.7)	0.34 (8.6)	0.41 (10.4)	6200 (427)	3100 (213)
1/4	-PT-RT4	1.17 (29.7)	0.69 (17.5)	0.44 (11.2)	0.59 (15.0)	7200 (496)	3600 (248)
3/8	-PT-RT6	1.42 (36.1)	0.81 (20.6)	0.58 (14.7)	0.59 (15.0)	5600 (385)	2800 (192)
1/2	-PT-RT8	1.56 (39.6)	1.00 (25.4)	0.72 (18.3)	0.78 (19.8)	5600 (385)	2800 (192)
3/4	-PT-RT12	1.92 (48.8)	1.25 (31.8)	0.94 (23.9)	0.81 (20.6)	5100 (351)	2500 (172)
1	-PT-RT16	1.91 (48.5)	1.69 (42.9)	1.17 (29.7)	1.00 (25.4)	6400 (440)	3200 (220)
1 1/4	-PT-RT20	2.35 (59.8)	2.00 (50.8)	1.46 (37.2)	1.00 (25.4)	3100 (213)	1600 (110)
1 1/2	-PT-RT24	2.56 (65.0)	2.50 (63.5)	1.70 (43.3)	1.09 (27.7)	5100 (351)	2500 (172)

Female Crosses

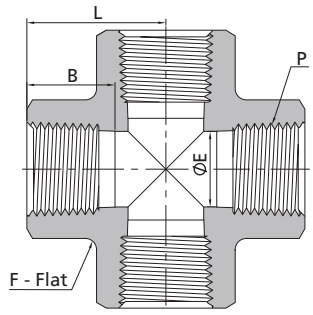

Female NPT Threads							
P-NPT Size	Basic Ordering Number	Dimensions, in. (mm)				Working Pressure psig (bar)	
		L	F	E	B	316 SS, Steel	Brass
1/16	-PCR-NS1	0.86 (21.8)	0.44 (11.1)	0.19 (4.8)	0.39 (9.9)	6700 (460)	3300 (227)
1/8	-PCR-NS2	1.04 (26.4)	0.50 (12.7)	0.34 (8.6)	0.41 (10.4)	6200 (427)	3100 (213)
1/4	-PCR-NS4	1.17 (29.7)	0.69 (17.5)	0.45 (11.4)	0.59 (15.0)	7200 (496)	3600 (248)
3/8	-PCR-NS6	1.42 (36.1)	0.81 (20.6)	0.59 (15.0)	0.59 (15.0)	5600 (385)	2800 (192)
1/2	-PCR-NS8	1.56 (39.6)	1.00 (25.4)	0.73 (18.5)	0.78 (19.8)	5600 (385)	2800 (192)
3/4	-PCR-NS12	1.92 (48.8)	1.25 (31.8)	0.94 (23.9)	0.81 (20.6)	5100 (351)	2500 (172)
1	-PCR-NS16	1.91 (48.5)	1.69 (42.9)	1.17 (29.7)	1.00 (25.4)	6400 (440)	3200 (220)

Female ISO Tapered Threads							
P-RT Size	Basic Ordering Number	Dimensions, in. (mm)				Working Pressure psig (bar)	
		L	F	E	B	316 SS, Steel	Brass
1/16	-PCR-RT1	0.86 (21.8)	0.44 (11.1)	0.19 (4.8)	0.39 (9.9)	6700 (460)	3300 (227)
1/8	-PCR-RT2	1.04 (26.4)	0.50 (12.7)	0.34 (8.6)	0.41 (10.4)	6200 (427)	3100 (213)
1/4	-PCR-RT4	1.17 (29.7)	0.69 (17.5)	0.45 (11.4)	0.59 (15.0)	7200 (496)	3600 (248)
3/8	-PCR-RT6	1.42 (36.1)	0.81 (20.6)	0.59 (15.0)	0.59 (15.0)	5600 (385)	2800 (192)
1/2	-PCR-RT8	1.56 (39.6)	1.00 (25.4)	0.73 (18.5)	0.78 (19.8)	5600 (385)	2800 (192)
3/4	-PCR-RT12	1.92 (48.8)	1.25 (31.8)	0.94 (23.9)	0.81 (20.6)	5100 (351)	2500 (172)
1	-PCR-RT16	1.91 (48.5)	1.69 (42.9)	1.17 (29.7)	1.00 (25.4)	6400 (440)	3200 (220)

Pipe to Pipe Unions

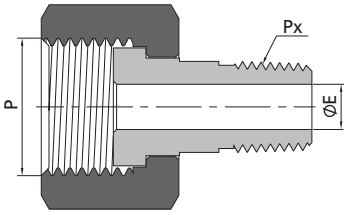

Metric Threads				NPT Threads
P-Metric Thread Size	Px-NPT Size	Basic Ordering Number	Dimensions, in. (mm)	Working Pressure psig (bar)
			E	316 SS, Steel
M20 x 1.5	1/8	-PUP-MS20-NS2	0.19 (4.8)	4500 (310)
M20 x 1.5	1/4	-PUP-MS20-NS4	0.28 (7.1)	4500 (310)

Metric Threads				ISO Tapered Threads
P-Metric Thread Size	Px-RT Size	Basic Ordering Number	Dimensions, in. (mm)	Working Pressure psig (bar)
			E	316 SS, Steel
M20 x 1.5	1/8	-PUP-MS20-RT2	0.19 (4.8)	4500 (310)
M20 x 1.5	1/4	-PUP-MS20-RT4	0.28 (7.1)	4500 (310)

ISO Parallel Threads				NPT Threads
P-ISO Pipe Size	Px-NPT Size	Basic Ordering Number	Dimensions, in. (mm) E	Working Pressure psig (bar) 316 SS, Steel
1/2	1/8	-PUP-RG8-NS2	0.19 (4.8)	4900 (337)
1/2	1/4	-PUP-RG8-NS4	0.28 (7.1)	4900 (337)

Hand Tight Adapter Fittings

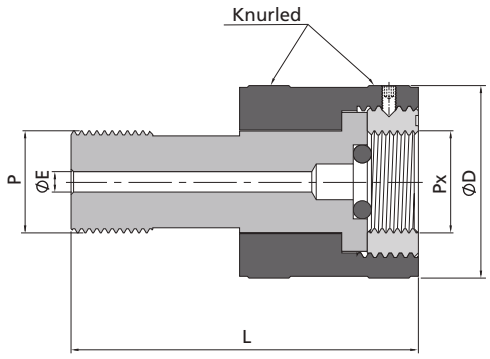

Metric Threads						
P-Metric Thread Size	Px-Metric Thread Size	Basic Ordering Number	Dimensions, mm (in.) L	D	E	Working Pressure psig (bar) 316 SS, Steel
M14 x 1.5	M14 x 1.5	-HF-MS14	58.0 (2.28)	27.0 (1.06)	3.2 (0.13)	6100 (425)
M14 x 1.5	M20 x 1.5	-HF-MS14-MS20	58.0 (2.28)	37.5 (1.48)	3.2 (0.13)	5700 (393)
M20 x 1.5	M14 x 1.5	-HF-MS20-MS14	68.0 (2.68)	32.0 (1.26)	4.0 (0.16)	6100 (425)
M20 x 1.5	M20 x 1.5	-HF-MS20	68.0 (2.68)	37.5 (1.48)	4.0 (0.16)	5700 (393)
M20 x 1.5	M22 x 1.5	-HF-MS20-MS22	68.0 (2.68)	37.5 (1.48)	4.0 (0.16)	4000 (275)

Metric Threads					ISO Parallel Threads	
P-Metric Thread Size	Px-ISO Thread Size	Basic Ordering Number	Dimensions, mm (in.) L	D	E	Working Pressure psig (bar) 316 SS, Steel
M20 x 1.5	1/4	-HF-MS20-RG4	68.0 (2.68)	32.0 (1.26)	3.2 (0.13)	6500 (447)
M20 x 1.5	3/8	-HF-MS20-RG6	68.0 (2.68)	32.0 (1.26)	3.6 (0.14)	4300 (297)
M20 x 1.5	1/2	-HF-MS20-RG8	68.0 (2.68)	37.5 (1.48)	4.0 (0.16)	4800 (334)

ISO Parallel Threads						
P-ISO Thread Size	Px-ISO Thread Size	Basic Ordering Number	Dimensions, mm (in.) L	D	E	Working Pressure psig (bar) 316 SS, Steel
1/2	1/4	-HF-BP8-RG4	68.0 (2.68)	32.0 (1.26)	3.2 (0.13)	6500 (447)
1/2	3/8	-HF-BP8-RG6	68.0 (2.68)	32.0 (1.26)	3.6 (0.14)	4300 (297)
1/2	1/2	-HF-BP8-RG8	68.0 (2.68)	37.5 (1.48)	4.0 (0.16)	4800 (334)

Pipe Plugs

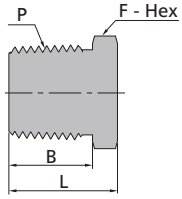

Male NPT Threads

P-NPT Size	Basic Ordering Number	Dimensions, in. (mm)		
		L	F	B
1/16	-PP-NS1	0.56 (14.2)	0.31 (7.9)	0.38 (9.7)
1/8	-PP-NS2	0.56 (14.2)	0.44 (11.1)	0.38 (9.7)
1/4	-PP-NS4	0.75 (19.1)	0.56 (14.3)	0.56 (14.2)
3/8	-PP-NS6	0.78 (19.8)	0.69 (17.5)	0.56 (14.2)
1/2	-PP-NS8	0.97 (24.6)	0.87 (22.2)	0.75 (19.1)
3/4	-PP-NS12	1.21 (30.7)	1.06 (27.0)	0.75 (19.1)
1	-PP-NS16	1.50 (38.1)	1.37 (34.9)	0.94 (23.9)
1 1/4	-PP-NS20	1.51 (38.4)	1.75 (44.5)	0.94 (23.9)
1 1/2	-PP-NS24	1.72 (43.7)	2.00 (50.8)	1.03 (26.2)
2	-PP-NS32	2.00 (50.8)	2.50 (63.5)	1.06 (26.9)

Male ISO Tapered Threads

P-RT Size	Basic Ordering Number	Dimensions, in. (mm)		
		L	F	B
1/16	-PP-RT1	0.56 (14.2)	0.31 (7.9)	0.38 (9.7)
1/8	-PP-RT2	0.56 (14.2)	0.44 (11.1)	0.38 (9.7)
1/4	-PP-RT4	0.75 (19.1)	0.56 (14.3)	0.56 (14.2)
3/8	-PP-RT6	0.78 (19.8)	0.69 (17.5)	0.56 (14.2)
1/2	-PP-RT8	0.97 (24.6)	0.87 (22.2)	0.75 (19.1)
3/4	-PP-RT12	1.21 (30.7)	1.06 (27.0)	0.75 (19.1)
1	-PP-RT16	1.50 (38.1)	1.37 (34.9)	0.94 (23.9)
1 1/4	-PP-RT20	1.51 (38.4)	1.75 (44.5)	0.94 (23.9)
1 1/2	-PP-RT24	1.72 (43.7)	2.00 (50.8)	1.03 (26.2)
2	-PP-RT32	2.00 (50.8)	2.50 (63.5)	1.06 (26.9)

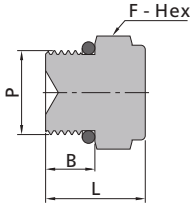

Male SAE/MS Straight Threads (ST)

P-SAE Nominal Size	P-SAE/MS Thread Specification	Basic Ordering Number	Dimensions, in. (mm)		
			L	F	B
4	7/16-20	-PP-ST7	0.76 (19.3)	0.56 (14.3)	0.36 (9.1)
6	9/16-18	-PP-ST9	0.82 (20.8)	0.69 (17.5)	0.39 (9.9)
8	3/4-16	-PP-ST12	0.89 (22.6)	0.87 (22.2)	0.44 (11.2)
12	1 1/16-12	-PP-ST17	1.12 (28.4)	1.25 (31.8)	0.59 (15.0)
16	1 5/16-12	-PP-ST21	1.18 (30.0)	1.50 (38.1)	0.59 (15.0)

Dimensions are for reference only, subject to change.

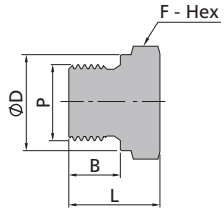

Male ISO Parallel Threads

P-RS Size	Basic Ordering Number	Dimensions, in. (mm)			
		L	F	B	D
1/8	-PP-RS2	0.55 (14.0)	0.56 (14.3)	0.28 (7.1)	0.54 (13.7)
1/4	-PP-RS4	0.78 (19.8)	0.75 (19.1)	0.44 (11.2)	0.71 (18.0)
3/8	-PP-RS6	0.78 (19.8)	0.87 (22.2)	0.44 (11.2)	0.86 (21.8)
1/2	-PP-RS8	0.99 (25.1)	1.06 (27.0)	0.55 (14.0)	1.02 (25.9)
3/4	-PP-RS12	1.13 (28.7)	1.31 (33.3)	0.62 (15.7)	1.26 (32.0)
1	-PP-RS16	1.21 (30.7)	1.63 (41.3)	0.71 (18.0)	1.54 (39.1)

Male Metric Threads

P-Metric Size	Basic Ordering Number	Dimensions, mm (in.)			
		L	F	B	D
M14 x 1.5	-PP-MRS14	21.0 (0.83)	20.6 (0.81)	12.0 (0.47)	18.8 (0.74)
M16 x 1.5	-PP-MRS16	23.0 (0.91)	22.2 (0.87)	12.0 (0.47)	20.8 (0.82)
M18 x 1.5	-PP-MRS18	25.0 (0.98)	23.8 (0.94)	12.0 (0.47)	22.8 (0.90)
M20 x 1.5	-PP-MRS20	26.5 (1.04)	25.4 (1.00)	14.0 (0.55)	24.8 (0.98)
M22 x 1.5	-PP-MRS22	28.8 (1.13)	28.6 (1.13)	14.0 (0.55)	26.8 (1.06)
M24 x 1.5	-PP-MRS24	29.0 (1.14)	35.0 (1.38)	14.0 (0.55)	28.8 (1.13)
M27 x 2	-PP-MRS27	30.0 (1.18)	36.5 (1.44)	16.0 (0.63)	31.8 (1.25)

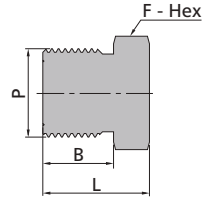

Male Metric Threads

P-Metric Size	Basic Ordering Number	Dimensions, mm (in.)		
		L	F	B
M14 x 1.5	-PP-MS14	18.0 (0.71)	16.0 (0.63)	13.0 (0.51)
M16 x 1.5	-PP-MS16	20.0 (0.79)	18.0 (0.71)	14.0 (0.55)
M18 x 1.5	-PP-MS18	22.0 (0.87)	19.0 (0.75)	15.0 (0.59)
M20 x 1.5	-PP-MS20	24.0 (0.94)	22.0 (0.87)	16.0 (0.63)
M22 x 1.5	-PP-MS22	26.0 (1.02)	24.0 (0.94)	17.0 (0.67)
M24 x 1.5	-PP-MS24	26.0 (1.02)	27.0 (1.06)	17.0 (0.67)
M27 x 2	-PP-MS27	27.0 (1.06)	30.0 (1.18)	18.0 (0.71)
M30 x 2	-PP-MS30	32.0 (1.26)	32.0 (1.26)	20.0 (0.79)

Hollow Hex Plugs

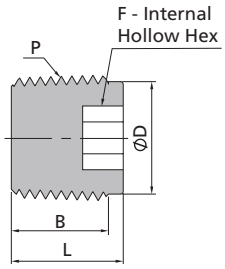

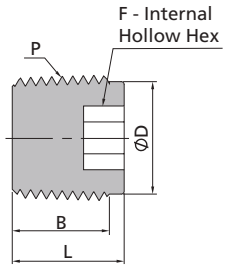

Male NPT Threads

P-NPT Size	Basic Ordering Number	Dimensions, in. (mm)			
		L	F	B	D
1/16	-PI-NS1	0.30 (7.6)	0.16 (4.0)	0.29 (7.4)	0.29 (7.4)
1/8	-PI-NS2	0.41 (10.4)	0.19 (4.8)	0.29 (7.4)	0.37 (9.4)
1/4	-PI-NS4	0.61 (15.5)	0.25 (6.4)	0.49 (12.4)	0.48 (12.1)
3/8	-PI-NS6	0.59 (15.0)	0.31 (7.9)	0.47 (11.9)	0.62 (15.7)
1/2	-PI-NS8	0.76 (19.3)	0.37 (9.5)	0.64 (16.2)	0.76 (19.3)
3/4	-PI-NS12	0.78 (19.8)	0.56 (14.3)	0.66 (16.7)	1.01 (25.7)
1	-PI-NS16	0.82 (20.8)	0.63 (15.9)	0.70 (17.7)	1.25 (31.8)

Male ISO Tapered Threads

P-RT Size	Basic Ordering Number	Dimensions, in. (mm)			
		L	F	B	D
1/16	-PI-RT1	0.30 (7.6)	0.16 (4.0)	0.29 (7.4)	0.29 (7.4)
1/8	-PI-RT2	0.41 (10.4)	0.19 (4.8)	0.29 (7.4)	0.37 (9.4)
1/4	-PI-RT4	0.61 (15.5)	0.25 (6.4)	0.49 (12.4)	0.48 (12.1)
3/8	-PI-RT6	0.61 (15.5)	0.31 (7.9)	0.49 (12.4)	0.62 (15.7)
1/2	-PI-RT8	0.76 (19.3)	0.37 (9.5)	0.64 (16.2)	0.76 (19.3)
3/4	-PI-RT12	0.78 (19.8)	0.56 (14.3)	0.66 (16.7)	1.01 (25.7)
1	-PI-RT16	0.82 (20.8)	0.63 (15.9)	0.70 (17.7)	1.25 (31.8)

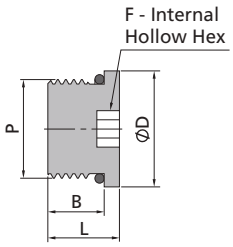

Male SAE/MS Straight Threads (ST)

P-SAE Nominal Size	P-SAE/MS Thread Specification	Basic Ordering Number	Dimensions, in. (mm)			
			L	F	B	D
4	7/16-20	-PI-ST7	0.45 (11.4)	0.19 (4.8)	0.36 (9.1)	0.56 (14.2)
6	9/16-18	-PI-ST9	0.48 (12.2)	0.25 (6.4)	0.39 (9.9)	0.69 (17.5)
8	3/4-16	-PI-ST12	0.56 (14.2)	0.31 (7.9)	0.44 (11.2)	0.88 (22.4)
12	1 1/16-12	-PI-ST17	0.75 (19.1)	0.56 (14.3)	0.59 (15.0)	1.25 (31.8)
16	1 5/16-12	-PI-ST21	0.75 (19.1)	0.63 (15.9)	0.59 (15.0)	1.50 (38.1)

Pipe Caps

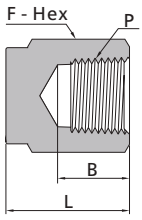

Female NPT Threads

P-NPT Size	Basic Ordering Number	Dimensions, in. (mm)			Working Pressure psig (bar)	
		L	F	B	316 SS, Steel	Brass
1/16	-PC-NS1	0.50 (12.7)	0.44 (11.1)	0.39 (9.9)	6700 (460)	3300 (227)
1/8	-PC-NS2	0.75 (19.1)	0.56 (14.3)	0.41 (10.4)	6500 (447)	3200 (220)
1/4	-PC-NS4	0.91 (23.1)	0.75 (19.1)	0.59 (15.0)	6600 (454)	3300 (277)
3/8	-PC-NS6	1.03 (26.2)	0.87 (22.2)	0.59 (15.0)	5300 (365)	2600 (179)
1/2	-PC-NS8	1.34 (34.0)	1.06 (27.0)	0.78 (19.8)	4900 (337)	2400 (165)
3/4	-PC-NS12	1.44 (36.6)	1.31 (33.3)	0.81 (20.6)	4600 (316)	2300 (158)
1	-PC-NS16	1.62 (41.1)	1.63 (41.3)	1.00 (25.4)	4400 (303)	2200 (151)

Female ISO Tapered Threads

P-RT Size	Basic Ordering Number	Dimensions, in. (mm)			Working Pressure psig (bar)	
		L	F	B	316 SS, Steel	Brass
1/16	-PC-RT1	0.50 (12.7)	0.44 (11.1)	0.39 (9.9)	6700 (460)	3300 (227)
1/8	-PC-RT2	0.75 (19.1)	0.56 (14.3)	0.41 (10.4)	6500 (447)	3200 (220)
1/4	-PC-RT4	0.91 (23.1)	0.75 (19.1)	0.59 (15.0)	6600 (454)	3300 (277)
3/8	-PC-RT6	1.03 (26.2)	0.87 (22.2)	0.59 (15.0)	5300 (365)	2600 (179)
1/2	-PC-RT8	1.34 (34.0)	1.06 (27.0)	0.78 (19.8)	4900 (337)	2400 (165)
3/4	-PC-RT12	1.44 (36.6)	1.31 (33.3)	0.81 (20.6)	4600 (316)	2300 (158)
1	-PC-RT16	1.62 (41.1)	1.63 (41.3)	1.00 (25.4)	4400 (303)	2200 (151)

Ordering Number Description

SS - PSE - NS6 - NS4 - □ - □ - S - □

Material	
SS	316 SS
S4	304 SS
S1	321 SS
M	Alloy 400
INC	Alloy 600
HC	Alloy C-276
B	Brass
CS	Carbon Steel
904L	904L SS

Fitting Type	
PHN	Hex Nipple
PLN	Hex Long Nipple
PCN	Close Nipple
PSN	Special Pipe Nipple
PA	Adapter
PRB	Reducing Bushing
PCG	Hex Coupling
UBJ	Union Ball Joints
PME	Male Elbow
PSE	Street Elbow
PSV	45° Street Elbow
PE	Female Elbow
PVE	45° Female Elbow
PMT	Male Tee
PTB	Female Branch Tee
PTR	Female Run Tee
PST	Male Street Tee
PBT	Male Branch Tee
PT	Female Tee
PCR	Female Cross
PUP	Pipe to Pipe Union
HF	Hand Tight Adapter Fitting
PP	Pipe Plug
PI	Hollow Hex Plug
PC	Pipe Cap

P1 Type	
NS	NPT Thread
RT	ISO Tapered Thread
RG	ISO Parallel Thread (For RG Gasket)
BP	ISO Parallel Thread (For RG Gasket)
RS	ISO Parallel Thread (For RS Gasket)
MRS	Male Metric Thread (For RS-M Gasket)
MS	Male Metric Thread (For RG-M Gasket)
ST	Male SAE/MS Straight Thread
US	Female SAE/MS Straight Thread

P1 Size	
2	1/8"
4	1/4"
5	5/16-24
6	3/8" or 3/8-24
7	7/16 -20
8	1/2" or M8×1
9	9/16 -18
10	M10×1
12	3/4" or M12×1.5 or 3/4-16
14	M14×1.5 or 7/8-14
16	1" or M16 x 1.5
17	1 1/16-12
18	M18 x 1.5
19	1 3/16-12
20	1 1/4" or M20 x 1.5
21	1 5/16-12
22	M22 x 1.5
24	1 1/2" or M24 X 1.5
26	1 5/8-12
27	M27 x 2
30	1 7/8-12 or M30 x 2
32	2"

P2, P3 and P4
Specified in the same way as P1

Special Application	
	NO
S	NACE MR0175
Classification for Nuclear Facility Application	
N2	Class 2
N3	Class 3

Cleaning and Packaging	
	FC-01
F2	FC-02

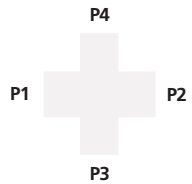

Note: "Ordering Number Description" is a reference to understand the combination rules of FITOK product part number. Not all combinations are available.

P1, P2, P3 and P4 shall be described in the following orders:

- ◎ NPT Thread - ISO Tapered Thread - ISO Parallel Thread - SAE/MS Straight Thread - Metric Thread - Others
- ◎ Male after female but the "PRB" and the "HF" types are not included
- ◎ Describe in descending order as per size if the end connection types are the same
- ◎ Describe the end of P1 if all end connections are the same

Cleaning and Packaging:

FC-01: Standard cleaning and packaging for general industrial procedures

FC-02: Special cleaning and packaging for wetted system components to ensure compliance with product cleanliness requirement as stated in ASTM G93 Level C

6W Series Weld Fittings



Contents

Tube Butt Weld Fittings

Male Connectors - WM  A-152

Female Connectors - WF  A-154

Reducing Unions - WU  A-154

Union Elbows - WLU  A-155

Union Tees - WT 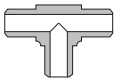 A-155

Union Crosses - WC 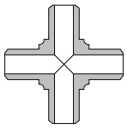 A-156

Tube Socket Weld Fittings

Male Connectors - WM  A-156

Female Connectors - WF  A-157

Male Elbows - WLM  A-157

Female Elbows - WLF  A-158

Unions - WU  A-158

Reducing Unions - WU  A-159

Union Elbows - WLU  A-159

Union 45° Elbows - WV  A-160

Union Tees - WT 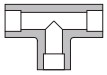 A-160

Union Crosses - WC 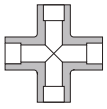 A-161

Pipe Butt Weld Fittings

Male Connectors - WM  A-161

Female Connectors - WF  A-162

Pipe Socket Weld Fittings

Male Connectors - WM  A-162

Female Connectors - WF  A-162

Unions - WU  A-163

Weld Adapters

Tube Butt Weld to Tube Socket Weld - WA  A-163

Pipe Butt Weld to Tube Socket Weld - WA  A-163

Pipe to Weld Fittings

Pipe to Tube Butt Weld - PUW 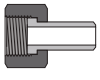 A-164

Male Pipe to Tube Butt Weld - MUW 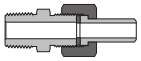 A-165

Ordering Number Description A-166

Features

◎ 316 stainless steel as standard material. Other materials are available upon request
◎ Straight fittings are manufactured from quality bar stock. Shaped fittings are made by forging
◎ Quality machining of all ports ensures consistent welding
◎ Radius junction design for elbows provides smooth flow path
◎ All fittings are cleaned to remove oil, grease and loose particles
◎ Every fitting is marked with size, material and heat number

Technical Data

◎ Sizes range from 1/8" to 2" and 6 mm to 38 mm.
◎ Dimensions and Wall Thickness of Tubes with Butt Welding Ends

Fractional Tube	
Tube O.D. in.	Wall Thickness in.
1/4	0.065
3/8	0.095
1/2	0.095
5/8	0.109
3/4	0.120
1	0.134

Metric Tube	
Tube O.D. mm	Wall Thickness mm
6	1.8
8	1.8
10	2.2
12	2.2
14	2.5
15	2.5
16	2.8
18	2.8
20	3.0
22	3.0
25	3.5
27	4.0
28	4.0
30	4.0
32	4.5
34	4.5
38	5.0

Pipe					
Pipe Size		O.D.		Nominal Wall Thickness SCH80	
NPS	DN	in.	mm	in.	mm
1/8	6	0.405	10.3	0.095	2.41
1/4	8	0.540	13.7	0.119	3.02
3/8	10	0.675	17.1	0.126	3.20
1/2	15	0.840	21.3	0.147	3.73
3/4	20	1.050	26.7	0.154	3.91
1	25	1.315	33.4	0.179	4.55

For welding ends in other dimensions or with other wall thickness, please contact FITOK or our authorized distributors.

◎ Working Temperature:

Material	Minimum Temperature	Maximum Temperature
316 stainless steel	-325°F (-198°C)	1000°F (538°C)
316L stainless steel	-325°F (-198°C)	850°F (454°C)
904L stainless steel	-325°F (-198°C)	700°F (371°C)

◎ Working Pressure:

1. The working pressures shown are based on ANSI/ASME B31.3 at ambient temperature, to determine working pressures in accordance with ANSI/ASME B31.1, multiply the working pressures by 0.94.
2. Use the allowable working pressure at ambient temperature to multiply the elevated temperature factors to get the working pressure at elevated temperature. To know the elevated temperature factor, please see F-14.

Materials

Material	Bar Stock	Forgings	Designator
316 stainless steel	ASTM A276, ASME SA479	ASTM A182, ASME SA182	SS
316L stainless steel			6L
904L stainless steel	ASTM B649	ASTM A182	904L

◎ Using the same materials to weld will ensure the same coefficients of expansion and good welding.
◎ Tungsten Inert Gas (TIG) Welding is recommended.

Dimensions

Dimensions are for reference only, subject to change.

Tube Butt Weld Fittings

Male Connectors

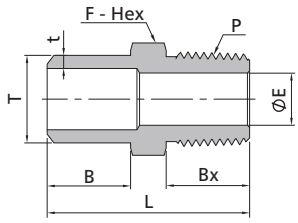

Fractional Tube									NPT Thread
T-Tube O.D. (in.)	t-Wall Thickness (in.)	P-NPT Size	Basic Ordering Number	Dimensions, in. (mm)					Working Pressure psig (bar)
				L	B	Bx	F	E	
1/4	0.065	1/4	-WM-TB4-NS4	1.17 (29.7)	0.38 (9.7)	0.56 (14.2)	0.56 (14.3)	0.28 (7.1)	8000 (551)
1/4	0.065	1/2	-WM-TB4-NS8	1.45 (36.8)	0.38 (9.7)	0.75 (19.1)	0.87 (22.2)	0.47 (11.9)	7700 (530)
3/8	0.095	1/4	-WM-TB6-NS4	1.17 (29.7)	0.38 (9.7)	0.56 (14.2)	0.56 (14.3)	0.28 (7.1)	8000 (551)
3/8	0.095	1/2	-WM-TB6-NS8	1.45 (36.8)	0.38 (9.7)	0.75 (19.1)	0.87 (22.2)	0.47 (11.9)	7700 (530)
1/2	0.095	1/4	-WM-TB8-NS4	1.35 (34.3)	0.56 (14.2)	0.56 (14.2)	0.56 (14.3)	0.28 (7.1)	6780 (468)
1/2	0.095	1/2	-WM-TB8-NS8	1.63 (41.4)	0.56 (14.2)	0.75 (19.1)	0.87 (22.2)	0.47 (11.9)	6780 (468)
5/8	0.109	1/4	-WM-TB10-NS4	1.37 (34.8)	0.56 (14.2)	0.56 (14.2)	0.69 (17.5)	0.28 (7.1)	5760 (397)
5/8	0.109	1/2	-WM-TB10-NS8	1.63 (41.4)	0.56 (14.2)	0.75 (19.1)	0.87 (22.2)	0.47 (11.9)	5760 (397)
3/4	0.120	1/4	-WM-TB12-NS4	1.58 (40.1)	0.75 (19.1)	0.56 (14.2)	0.81 (20.6)	0.28 (7.1)	5530 (381)
3/4	0.120	1/2	-WM-TB12-NS8	1.82 (46.2)	0.75 (19.1)	0.75 (19.1)	0.87 (22.2)	0.47 (11.9)	5530 (381)
1	0.134	1/4	-WM-TB16-NS4	1.69 (42.9)	0.75 (19.1)	0.56 (14.2)	1.06 (27.0)	0.28 (7.1)	4480 (309)
1	0.134	1/2	-WM-TB16-NS8	1.88 (47.8)	0.75 (19.1)	0.75 (19.1)	1.06 (27.0)	0.47 (11.9)	4480 (309)

Metric Tube									NPT Thread
T-Tube O.D. (mm)	t-Wall Thickness (mm)	P-NPT Size	Basic Ordering Number	Dimensions, mm (in.)					Working Pressure psig (bar)
				L	B	Bx	F	E	
12	2.2	1/4	-WM-MTB12-NS4	34.3 (1.35)	14.2 (0.56)	14.2 (0.56)	14.0 (0.55)	7.1 (0.28)	6470 (446)
12	2.2	1/2	-WM-MTB12-NS8	41.1 (1.62)	14.2 (0.56)	19.1 (0.75)	22.0 (0.87)	11.9 (0.47)	6470 (446)
14	2.5	1/4	-WM-MTB14-NS4	34.3 (1.35)	14.2 (0.56)	14.2 (0.56)	15.0 (0.59)	7.1 (0.28)	6280 (433)
14	2.5	1/2	-WM-MTB14-NS8	41.4 (1.63)	14.2 (0.56)	19.1 (0.75)	22.0 (0.87)	11.9 (0.47)	6280 (433)
15	2.5	1/4	-WM-MTB15-NS4	34.8 (1.37)	14.2 (0.56)	14.2 (0.56)	16.0 (0.63)	7.1 (0.28)	5770 (398)
16	2.8	1/4	-WM-MTB16-NS4	35.6 (1.40)	14.2 (0.56)	14.2 (0.56)	18.0 (0.71)	7.1 (0.28)	6140 (423)
16	2.8	1/2	-WM-MTB16-NS8	41.1 (1.62)	14.2 (0.56)	19.1 (0.75)	22.0 (0.87)	11.9 (0.47)	6140 (423)
20	3.0	1/2	-WM-MTB20-NS8	46.2 (1.82)	19.1 (0.75)	19.1 (0.75)	22.0 (0.87)	11.9 (0.47)	5110 (352)
22	3.0	1/4	-WM-MTB22-NS4	41.2 (1.62)	19.1 (0.75)	14.2 (0.56)	24.0 (0.94)	7.1 (0.28)	4620 (319)
22	3.0	1/2	-WM-MTB22-NS8	46.1 (1.81)	19.1 (0.75)	19.1 (0.75)	24.0 (0.94)	11.9 (0.47)	4620 (319)
25	3.5	3/4	-WM-MTB25-NS12	47.8 (1.88)	19.1 (0.75)	19.1 (0.75)	27.0 (1.06)	15.7 (0.62)	4730 (326)
25	3.5	1	-WM-MTB25-NS16	54.9 (2.16)	19.1 (0.75)	23.9 (0.94)	35.0 (1.38)	22.4 (0.88)	4730 (326)
28	4.0	1/2	-WM-MTB28-NS8	54.2 (2.13)	21.4 (0.84)	19.1 (0.75)	30.0 (1.18)	11.9 (0.47)	4850 (335)

Female Connectors

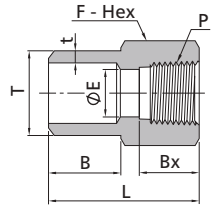

Fractional Tube									NPT Thread
T-Tube O.D. (in.)	t-Wall Thickness (in.)	P-NPT Size	Basic Ordering Number	Dimensions, in. (mm)					Working Pressure psig (bar)
				L	B	Bx	F	E	
1/4	0.065	1/4	-WF-TB4-NS4	1.10 (27.9)	0.38 (9.7)	0.59 (15.0)	0.75 (19.1)	0.12 (3.0)	6600 (454)
1/4	0.065	3/8	-WF-TB4-NS6	1.16 (29.5)	0.38 (9.7)	0.59 (15.0)	0.87 (22.2)	0.12 (3.0)	5300 (365)
3/8	0.095	1/4	-WF-TB6-NS4	1.10 (27.9)	0.38 (9.7)	0.59 (15.0)	0.75 (19.1)	0.19 (4.7)	6600 (454)
3/8	0.095	3/8	-WF-TB6-NS6	1.16 (29.5)	0.38 (9.7)	0.59 (15.0)	0.87 (22.2)	0.19 (4.7)	5300 (365)
1/2	0.095	1/4	-WF-TB8-NS4	1.34 (34.0)	0.56 (14.2)	0.59 (15.0)	0.75 (19.1)	0.31 (7.9)	6600 (454)
1/2	0.095	3/8	-WF-TB8-NS6	1.34 (34.0)	0.56 (14.2)	0.59 (15.0)	0.87 (22.2)	0.31 (7.9)	5300 (365)
1/2	0.095	1/2	-WF-TB8-NS8	1.53 (38.9)	0.56 (14.2)	0.78 (19.8)	1.06 (27.0)	0.31 (7.9)	4900 (337)

Metric Tube									NPT Thread
T-Tube O.D. (mm)	t-Wall Thickness (mm)	P-NPT Size	Basic Ordering Number	Dimensions, mm (in.)					Working Pressure psig (bar)
				L	B	Bx	F	E	
14	2.5	1/4	-WF-MTB14-NS4	33.0 (1.30)	14.2 (0.56)	15.0 (0.59)	19.0 (0.75)	9.0 (0.35)	6280 (433)
14	2.5	1/2	-WF-MTB14-NS8	38.9 (1.53)	14.2 (0.56)	19.8 (0.78)	27.0 (1.06)	9.0 (0.35)	4900 (337)
20	3.0	1/2	-WF-MTB20-NS8	43.7 (1.72)	19.1 (0.75)	19.8 (0.78)	27.0 (1.06)	14.0 (0.55)	4900 (337)
28	4.0	1/2	-WF-MTB28-NS8	49.8 (1.96)	23.9 (0.94)	19.8 (0.78)	30.0 (1.18)	15.7 (0.62)	4850 (335)

Reducing Unions

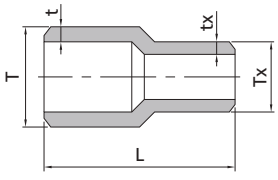

Fractional Tube						Fractional Tube
T-Tube O.D. (in.)	t-Wall Thickness (in.)	Tx-Tube O.D. (in.)	tx-Wall Thickness (in.)	Basic Ordering Number	L in. (mm)	Working Pressure psig (bar)
3/8	0.095	1/4	0.065	-WU-TB6-TB4	1.50 (38.1)	9930 (685)
1/2	0.095	1/4	0.065	-WU-TB8-TB4	1.50 (38.1)	6780 (468)
1/2	0.095	3/8	0.095	-WU-TB8-TB6	1.50 (38.1)	6780 (468)
3/4	0.120	1/2	0.095	-WU-TB12-TB8	1.50 (38.1)	5530 (381)
1	0.134	3/4	0.120	-WU-TB16-TB12	1.50 (38.1)	4480 (309)

Metric Tube						Metric Tube
T-Tube O.D. (mm)	t-Wall Thickness (mm)	Tx-Tube O.D. (mm)	tx-Wall Thickness (mm)	Basic Ordering Number	L mm (in.)	Working Pressure psig (bar)
20	3.0	14	2.5	-WU-MTB20-MTB14	38.1 (1.50)	6470 (445)
22	3.0	14	2.5	-WU-MTB22-MTB14	38.1 (1.50)	5780 (395)
22	3.0	18	2.8	-WU-MTB22-MTB18	38.1 (1.50)	5780 (395)
25	3.5	22	3.0	-WU-MTB25-MTB22	38.1 (1.50)	5780 (395)
38	5.0	25	3.5	-WU-MTB38-MTB25	38.1 (1.50)	5540 (380)

Union Elbows

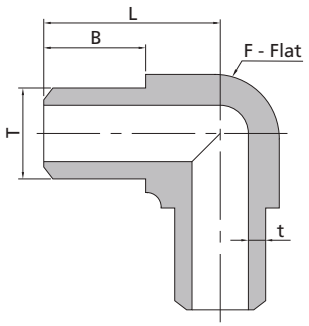

Fractional Tube

T-Tube O.D. (in.)	t-Wall Thickness (in.)	Basic Ordering Number	Dimensions, in. (mm)			Working Pressure psig (bar)
			L	B	F	
1/4	0.065	-WLU-TB4	0.64 (16.3)	0.38 (9.7)	0.37 (9.5)	10320 (712)
3/8	0.095	-WLU-TB6	0.71 (18.0)	0.38 (9.7)	0.44 (11.1)	9930 (685)
1/2	0.095	-WLU-TB8	0.96 (24.4)	0.56 (14.2)	0.56 (14.3)	6780 (468)
3/4	0.120	-WLU-TB12	1.31 (33.3)	0.75 (19.1)	0.81 (20.6)	5530 (381)
1	0.134	-WLU-TB16	1.46 (37.1)	0.75 (19.1)	1.06 (27.0)	4480 (309)

Metric Tube

T-Tube O.D. (mm)	t-Wall Thickness (mm)	Basic Ordering Number	Dimensions, mm (in.)			Working Pressure psig (bar)
			L	B	F	
10	2.2	-WLU-MTB10	18.0 (0.71)	9.7 (0.38)	11.1 (0.44)	8160 (563)
14	2.5	-WLU-MTB14	25.4 (1.00)	14.2 (0.56)	15.9 (0.63)	6280 (433)
16	2.8	-WLU-MTB16	26.2 (1.03)	14.2 (0.56)	17.5 (0.69)	6140 (423)
20	3.0	-WLU-MTB20	33.3 (1.31)	19.1 (0.75)	20.6 (0.81)	5110 (352)
22	3.0	-WLU-MTB22	35.3 (1.39)	19.1 (0.75)	23.8 (0.94)	4620 (319)
25	3.5	-WLU-MTB25	37.1 (1.46)	19.1 (0.75)	27.0 (1.06)	4730 (326)

Union Tees

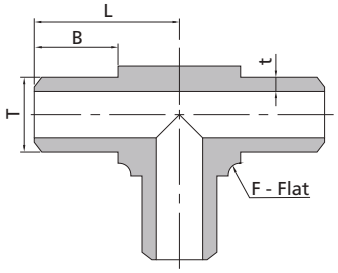

Fractional Tube

T-Tube O.D. (in.)	t-Wall Thickness (in.)	Basic Ordering Number	Dimensions, in. (mm)			Working Pressure psig (bar)
			L	B	F	
1/4	0.065	-WT-TB4	0.64 (16.3)	0.38 (9.7)	0.37 (9.5)	10320 (712)
3/8	0.095	-WT-TB6	0.71 (18.0)	0.38 (9.7)	0.44 (11.1)	9930 (685)
1/2	0.095	-WT-TB8	0.96 (24.4)	0.56 (14.2)	0.56 (14.3)	6780 (468)
3/4	0.120	-WT-TB12	1.31 (33.3)	0.75 (19.1)	0.81 (20.6)	5530 (381)
1	0.134	-WT-TB16	1.46 (37.1)	0.75 (19.1)	1.06 (27.0)	4480 (309)

Metric Tube

T-Tube O.D. (mm)	t-Wall Thickness (mm)	Basic Ordering Number	Dimensions, mm (in.)			Working Pressure psig (bar)
			L	B	F	
6	1.8	-WT-MTB6	16.3 (0.64)	9.7 (0.38)	9.5 (0.37)	12660 (873)
8	1.8	-WT-MTB8	16.3 (0.64)	9.7 (0.38)	9.5 (0.37)	8320 (574)
10	2.2	-WT-MTB10	18.0 (0.71)	9.7 (0.38)	11.1 (0.44)	8160 (563)
12	2.2	-WT-MTB12	24.4 (0.96)	14.2 (0.56)	14.3 (0.56)	6470 (446)
14	2.5	-WT-MTB14	25.4 (1.00)	14.2 (0.56)	15.9 (0.63)	6280 (433)
16	2.8	-WT-MTB16	26.2 (1.03)	14.2 (0.56)	17.5 (0.69)	6140 (423)
20	3.0	-WT-MTB20	33.3 (1.31)	19.1 (0.75)	20.6 (0.81)	5110 (352)
22	3.0	-WT-MTB22	35.3 (1.39)	19.1 (0.75)	23.8 (0.94)	4620 (319)
25	3.5	-WT-MTB25	37.1 (1.46)	19.1 (0.75)	27.0 (1.06)	4730 (326)
32	4.5	-WT-MTB32	49.3 (1.94)	23.9 (0.94)	34.9 (1.37)	4730 (326)

Union Crosses

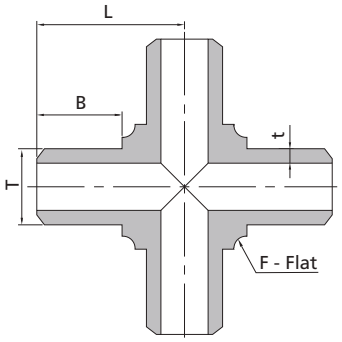

Fractional Tube

T-Tube O.D. (in.)	t-Wall Thickness (in.)	Basic Ordering Number	Dimensions, in. (mm)			Working Pressure psig (bar)
			L	B	F	
1/4	0.065	-WC-TB4	0.64 (16.3)	0.38 (9.7)	0.37 (9.5)	10320 (712)
3/8	0.095	-WC-TB6	0.71 (18.0)	0.38 (9.7)	0.44 (11.1)	9930 (685)
1/2	0.095	-WC-TB8	0.96 (24.4)	0.56 (14.2)	0.56 (14.3)	6780 (468)
3/4	0.120	-WC-TB12	1.31 (33.3)	0.75 (19.1)	0.81 (20.6)	5530 (381)
1	0.134	-WC-TB16	1.63 (41.3)	0.75 (19.1)	1.25 (31.8)	4480 (309)

Metric Tube

T-Tube O.D. (mm)	t-Wall Thickness (mm)	Basic Ordering Number	Dimensions, mm (in.)			Working Pressure psig (bar)
			L	B	F	
6	1.8	-WC-MTB6	16.3 (0.64)	9.7 (0.38)	9.5 (0.37)	12660 (873)
8	1.8	-WC-MTB8	16.3 (0.64)	9.7 (0.38)	9.5 (0.37)	8320 (574)
10	2.2	-WC-MTB10	18.0 (0.71)	9.7 (0.38)	11.1 (0.44)	8160 (563)

Tube Socket Weld Fittings

Male Connectors

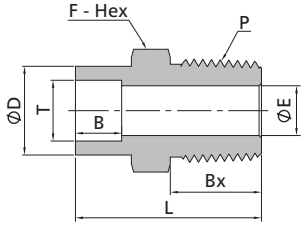

Fractional Tube — **NPT Thread**

T-Tube Size (in.)	P-NPT Size	Basic Ordering Number	Dimensions, in. (mm)						Working Pressure psig (bar)
			L	D	B	Bx	F	E	
1/4	1/4	-WM-TS4-NS4	1.15 (29.2)	0.48 (12.2)	0.28 (7.1)	0.56 (14.2)	0.56 (14.3)	0.19 (4.8)	8000 (551)
3/8	1/4	-WM-TS6-NS4	1.25 (31.8)	0.60 (15.2)	0.31 (7.9)	0.56 (14.2)	0.63 (15.9)	0.28 (7.1)	8000 (551)
3/8	3/8	-WM-TS6-NS6	1.25 (31.8)	0.60 (15.2)	0.31 (7.9)	0.56 (14.2)	0.69 (17.5)	0.28 (7.1)	7800 (537)
3/8	1/2	-WM-TS6-NS8	1.47 (37.3)	0.60 (15.2)	0.31 (7.9)	0.75 (19.1)	0.87 (22.2)	0.28 (7.1)	7700 (530)
1/2	1/4	-WM-TS8-NS4	1.31 (33.3)	0.73 (18.5)	0.38 (9.7)	0.56 (14.2)	0.75 (19.1)	0.28 (7.1)	6600 (454)
1/2	3/8	-WM-TS8-NS6	1.31 (33.3)	0.73 (18.5)	0.38 (9.7)	0.56 (14.2)	0.75 (19.1)	0.38 (9.6)	6600 (454)
1/2	1/2	-WM-TS8-NS8	1.53 (38.9)	0.73 (18.5)	0.38 (9.7)	0.75 (19.1)	0.87 (22.2)	0.41 (10.4)	6600 (454)
3/4	3/4	-WM-TS12-NS12	1.78 (45.1)	1.04 (26.4)	0.44 (11.2)	0.75 (19.1)	1.06 (27.0)	0.62 (15.7)	5900 (406)
1	1	-WM-TS16-NS16	2.11 (53.6)	1.36 (34.5)	0.62 (15.7)	0.94 (23.9)	1.37 (34.9)	0.88 (22.4)	5300 (365)

Metric Tube — **NPT Thread**

T-Tube Size (mm)	P-NPT Size	Basic Ordering Number	Dimensions, mm (in.)						Working Pressure psig (bar)
			L	D	B	Bx	F	E	
6	1/4	-WM-MTS6-NS4	29.2 (1.15)	12.0 (0.47)	7.1 (0.28)	14.2 (0.56)	14.0 (0.55)	4.8 (0.19)	8000 (551)
12	1/2	-WM-MTS12-NS8	38.9 (1.53)	20.2 (0.80)	9.7 (0.38)	19.1 (0.75)	22.0 (0.87)	9.5 (0.37)	6820 (470)
14	1/4	-WM-MTS14-NS4	33.3 (1.31)	23.8 (0.94)	10.0 (0.39)	14.2 (0.56)	24.0 (0.94)	7.1 (0.28)	6930 (478)
14	3/8	-WM-MTS14-NS6	35.0 (1.38)	23.8 (0.94)	10.0 (0.39)	14.2 (0.56)	24.0 (0.94)	9.6 (0.38)	6930 (478)
14	1/2	-WM-MTS14-NS8	40.0 (1.57)	23.8 (0.94)	10.0 (0.39)	19.1 (0.75)	24.0 (0.94)	10.4 (0.41)	6930 (478)
16	1/4	-WM-MTS16-NS4	35.0 (1.38)	23.8 (0.94)	10.4 (0.41)	14.2 (0.56)	24.0 (0.94)	7.1 (0.28)	6190 (426)
16	1/2	-WM-MTS16-NS8	40.0 (1.57)	23.8 (0.94)	10.4 (0.41)	19.1 (0.75)	24.0 (0.94)	11.9 (0.47)	6190 (426)
18	1/4	-WM-MTS18-NS4	40.1 (1.58)	26.0 (1.02)	11.2 (0.44)	14.2 (0.56)	27.0 (1.06)	7.1 (0.28)	6050 (417)
28	3/4	-WM-MTS28-NS12	55.5 (2.19)	40.0 (1.57)	20.0 (0.79)	19.1 (0.75)	41.0 (1.61)	15.7 (0.62)	5040 (348)
38	1 1/4	-WM-MTS38-NS20	68.3 (2.69)	50.8 (2.00)	22.0 (0.87)	23.9 (0.94)	52.0 (2.05)	28.6 (1.13)	5000 (344)

Female Connectors

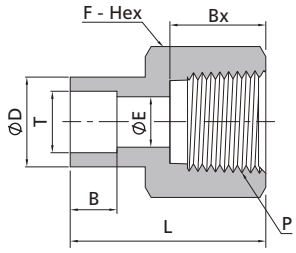

Fractional Tube									NPT Thread
T-Tube Size (in.)	P-NPT Size	Basic Ordering Number	Dimensions, in. (mm)						Working Pressure psig (bar)
			L	D	B	Bx	F	E	
1/8	1/8	-WF-TS2-NS2	0.83 (21.1)	0.29 (7.4)	0.10 (2.5)	0.41 (10.4)	0.56 (14.3)	0.09 (2.3)	6500 (447)
1/4	1/8	-WF-TS4-NS2	1.05 (26.7)	0.48 (12.2)	0.28 (7.1)	0.41 (10.4)	0.56 (14.3)	0.19 (4.8)	6500 (447)
1/4	1/4	-WF-TS4-NS4	1.18 (30.0)	0.48 (12.2)	0.28 (7.1)	0.59 (15.0)	0.75 (19.1)	0.19 (4.8)	6600 (454)
3/8	1/4	-WF-TS6-NS4	1.24 (31.5)	0.60 (15.2)	0.31 (7.9)	0.59 (15.0)	0.75 (19.1)	0.28 (7.1)	6600 (454)
1/2	3/8	-WF-TS8-NS6	1.36 (34.5)	0.73 (18.5)	0.38 (9.7)	0.59 (15.0)	0.87 (22.2)	0.41 (10.4)	5300 (365)
1/2	1/2	-WF-TS8-NS8	1.59 (40.4)	0.73 (18.5)	0.38 (9.7)	0.78 (19.8)	1.06 (27.0)	0.41 (10.4)	4900 (337)
3/4	3/4	-WF-TS12-NS12	1.73 (43.9)	1.04 (26.4)	0.44 (11.2)	0.81 (20.6)	1.31 (33.3)	0.63 (16.0)	4600 (316)
1	1	-WF-TS16-NS16	2.13 (54.1)	1.36 (34.5)	0.62 (15.7)	1.00 (25.4)	1.63 (41.3)	0.88 (22.4)	4400 (303)

Metric Tube									NPT Thread
T-Tube Size (mm)	P-NPT Size	Basic Ordering Number	Dimensions, mm (in.)						Working Pressure psig (bar)
			L	D	B	Bx	F	E	
8	1/4	-WF-MTS8-NS4	27.0 (1.06)	14.3 (0.56)	7.9 (0.31)	15.0 (0.59)	19.0 (0.75)	4.8 (0.19)	6600 (454)
10	1/4	-WF-MTS10-NS4	29.0 (1.14)	16.5 (0.65)	7.9 (0.31)	15.0 (0.59)	19.0 (0.75)	7.1 (0.28)	6600 (454)
14	1/4	-WF-MTS14-NS4	32.0 (1.26)	23.8 (0.94)	10.0 (0.39)	15.0 (0.59)	24.0 (0.94)	9.5 (0.37)	6930 (478)
28	3/4	-WF-MTS28-NS12	54.1 (2.13)	40.0 (1.57)	20.0 (0.79)	20.6 (0.81)	41.0 (1.61)	19.8 (0.78)	4600 (316)

Male Elbows

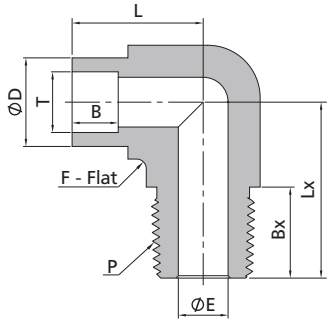

Fractional Tube										NPT Thread
T-Tube Size (in.)	P-NPT Size	Basic Ordering Number	Dimensions, in. (mm)							Working Pressure psig (bar)
			L	Lx	D	B	Bx	F	E	
1/4	1/4	SS-WLM-TS4-NS4	0.79 (20.1)	1.05 (26.7)	0.58 (14.7)	0.28 (7.1)	0.56 (14.2)	0.50 (12.7)	0.19 (4.8)	8000 (551)
3/8	1/4	SS-WLM-TS6-NS4	1.04 (26.4)	1.05 (26.7)	0.58 (14.7)	0.31 (7.9)	0.56 (14.2)	0.50 (12.7)	0.28 (7.1)	8000 (551)
3/8	3/8	SS-WLM-TS6-NS6	0.97 (24.6)	1.17 (29.7)	0.80 (20.2)	0.31 (7.9)	0.56 (14.2)	0.69 (17.5)	0.28 (7.1)	7800 (537)
3/8	1/2	SS-WLM-TS6-NS8	1.02 (25.9)	1.45 (36.8)	0.94 (23.8)	0.31 (7.9)	0.75 (19.1)	0.81 (20.6)	0.28 (7.1)	7700 (530)
1/2	1/2	SS-WLM-TS8-NS8	1.08 (27.4)	1.45 (36.8)	0.94 (23.8)	0.38 (9.7)	0.75 (19.1)	0.81 (20.6)	0.41 (10.4)	6600 (454)
3/4	3/4	SS-WLM-TS12-NS12	1.53 (38.9)	1.56 (39.6)	1.04 (26.4)	0.44 (11.2)	0.75 (19.1)	1.06 (27.0)	0.62 (15.7)	5900 (406)

Female Elbows

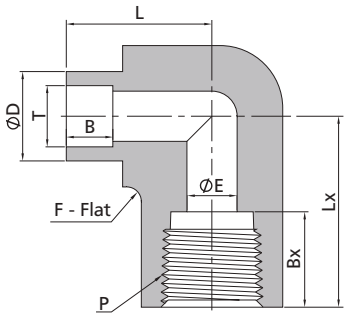

Fractional Tube										NPT Thread
T-Tube Size (in.)	P-NPT Size	Basic Ordering Number	Dimensions, in. (mm)							Working Pressure psig (bar)
			L	Lx	D	B	Bx	F	E	
1/4	1/4	SS-WLF-TS4-NS4	0.90 (22.9)	1.17 (29.7)	0.80 (20.2)	0.28 (7.1)	0.59 (15.0)	0.69 (17.5)	0.19 (4.8)	7400 (509)
3/8	1/4	SS-WLF-TS6-NS4	0.99 (25.1)	1.17 (29.7)	0.80 (20.2)	0.31 (7.9)	0.59 (15.0)	0.69 (17.5)	0.28 (7.1)	7400 (509)
3/8	1/2	SS-WLF-TS6-NS8	1.13 (28.7)	1.56 (39.6)	1.15 (29.3)	0.31 (7.9)	0.78 (19.8)	1.00 (25.4)	0.28 (7.1)	5700 (392)
1/2	1/2	SS-WLF-TS8-NS8	1.19 (30.2)	1.56 (39.6)	1.15 (29.3)	0.38 (9.7)	0.78 (19.8)	1.00 (25.4)	0.41 (10.4)	5700 (392)

Unions

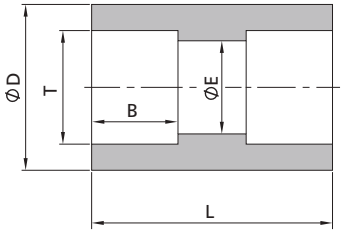

Fractional Tube						
T-Tube Size (in.)	Basic Ordering Number	Dimensions, in. (mm)				Working Pressure psig (bar)
		L	D	B	E	
1/4	SS-WU-TS4	0.75 (19.1)	0.48 (12.2)	0.28 (7.1)	0.19 (4.8)	10700 (737)
3/8	SS-WU-TS6	0.88 (22.4)	0.60 (15.2)	0.31 (7.9)	0.28 (7.1)	8100 (558)
1/2	SS-WU-TS8	1.06 (26.9)	0.73 (18.5)	0.38 (9.7)	0.41 (10.4)	6600 (454)
5/8	SS-WU-TS10	1.19 (30.2)	0.92 (23.4)	0.41 (10.4)	0.50 (12.7)	6200 (427)
3/4	SS-WU-TS12	1.31 (33.3)	1.04 (26.4)	0.44 (11.2)	0.63 (16.0)	5900 (406)
7/8	SS-WU-TS14	1.40 (35.5)	1.24 (31.5)	0.50 (12.7)	0.74 (18.8)	5730 (395)
1	SS-WU-TS16	1.44 (36.6)	1.36 (34.5)	0.62 (15.7)	0.88 (22.4)	5600 (385)

Metric Tube						
T-Tube Size (mm)	Basic Ordering Number	Dimensions, mm (in.)				Working Pressure psig (bar)
		L	D	B	E	
8	SS-WU-MTS8	22.4 (0.88)	14.3 (0.56)	7.9 (0.31)	6.4 (0.25)	9790 (675)
10	SS-WU-MTS10	23.6 (0.93)	16.5 (0.65)	7.9 (0.31)	7.4 (0.29)	8100 (558)
12	SS-WU-MTS12	26.9 (1.06)	20.2 (0.80)	9.7 (0.38)	9.5 (0.37)	6820 (470)
14	SS-WU-MTS14	28.0 (1.10)	23.8 (0.94)	10.0 (0.39)	10.4 (0.41)	6930 (478)
16	SS-WU-MTS16	30.2 (1.19)	23.8 (0.94)	10.4 (0.41)	12.7 (0.50)	6190 (426)
20	SS-WU-MTS20	28.0 (1.10)	27.0 (1.06)	11.2 (0.44)	17.0 (0.67)	5510 (380)

Reducing Unions

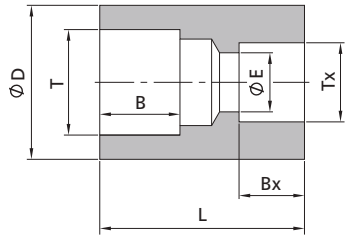

Fractional Tube								Fractional Tube
T-Tube Size (in.)	Tx-Tube Size (in.)	Basic Ordering Number	Dimensions, in. (mm)					Working Pressure psig (bar)
			L	D	B	E	Bx	
3/8	1/4	-WU-TS6-TS4	0.88 (22.4)	0.60 (15.2)	0.31 (7.9)	0.19 (4.8)	0.28 (7.1)	8100 (558)
1/2	1/4	-WU-TS8-TS4	0.96 (24.3)	0.73 (18.5)	0.38 (9.7)	0.19 (4.8)	0.28 (7.1)	6600 (454)
1/2	3/8	-WU-TS8-TS6	1.03 (26.1)	0.73 (18.5)	0.38 (9.7)	0.28 (7.1)	0.31 (7.9)	6600 (454)
3/4	3/8	-WU-TS12-TS6	1.17 (29.8)	1.04 (26.4)	0.44 (11.2)	0.28 (7.1)	0.31 (7.9)	5900 (406)
3/4	1/2	-WU-TS12-TS8	1.24 (31.6)	1.04 (26.4)	0.44 (11.2)	0.41 (10.4)	0.38 (9.7)	5900 (406)
1	3/4	-WU-TS16-TS12	1.26 (32.1)	1.36 (34.5)	0.62 (15.7)	0.63 (16.0)	0.44 (11.2)	5600 (385)

Metric Tube								Metric Tube
T-Tube Size (mm)	Tx-Tube Size (mm)	Basic Ordering Number	Dimensions, mm (in.)					Working Pressure psig (bar)
			L	D	B	E	Bx	
14	10	-WU-MTS14-MTS10	26.0 (1.02)	23.8 (0.94)	10.4 (0.41)	7.4 (0.29)	7.9 (0.31)	6930 (478)
25	14	-WU-MTS25-MTS14	30.0 (1.18)	34.5 (1.36)	15.7 (0.62)	10.4 (0.41)	10.0 (0.39)	5450 (376)
25	22	-WU-MTS25-MTS22	35.8 (1.41)	34.5 (1.36)	15.7 (0.62)	19.0 (0.75)	13.5 (0.53)	5450 (376)

Metric Tube								Fractional Tube
T-Tube Size (mm)	Tx-Tube Size (in.)	Basic Ordering Number	Dimensions, mm (in.)					Working Pressure psig (bar)
			L	D	B	E	Bx	
20	3/4	-WU-MTS20-TS12	28.0 (1.10)	27.0 (1.06)	11.2 (0.44)	15.7 (0.62)	11.2 (0.44)	5510 (380)
28	3/4	-WU-MTS28-TS12	36.8 (1.45)	40.0 (1.57)	20.0 (0.79)	15.7 (0.62)	11.2 (0.44)	5040 (348)

Union Elbows

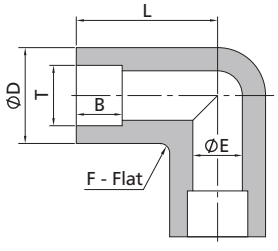

Fractional Tube							
T-Tube Size (in.)	Basic Ordering Number	Dimensions, in. (mm)					Working Pressure psig (bar)
		L	D	B	F	E	
1/8	-WLU-TS2	0.59 (15.0)	0.43 (11.0)	0.10 (2.5)	0.37 (9.5)	0.09 (2.3)	12600 (863)
1/4	-WLU-TS4	0.86 (21.8)	0.50 (12.8)	0.28 (7.1)	0.44 (11.1)	0.19 (4.8)	10700 (737)
3/8	-WLU-TS6	1.04 (26.4)	0.65 (16.5)	0.31 (7.9)	0.56 (14.3)	0.28 (7.1)	8100 (558)
1/2	-WLU-TS8	1.17 (29.7)	0.80 (20.2)	0.38 (9.7)	0.69 (17.5)	0.41 (10.4)	6600 (454)
5/8	-WLU-TS10	1.42 (36.1)	0.94 (23.8)	0.41 (10.4)	0.81 (20.6)	0.50 (12.7)	6200 (427)
3/4	-WLU-TS12	1.56 (39.6)	1.15 (29.3)	0.44 (11.2)	1.00 (25.4)	0.63 (16.0)	5900 (406)
1	-WLU-TS16	1.92 (48.8)	1.44 (36.7)	0.62 (15.7)	1.25 (31.8)	0.88 (22.4)	5600 (385)

Metric Tube							
T-Tube Size (mm)	Basic Ordering Number	Dimensions, mm (in.)					Working Pressure psig (bar)
		L	D	B	F	E	
10	-WLU-MTS10	24.6 (0.97)	16.5 (0.65)	7.9 (0.31)	14.3 (0.56)	7.4 (0.29)	8100 (558)
12	-WLU-MTS12	29.7 (1.17)	20.2 (0.80)	9.7 (0.38)	17.5 (0.69)	9.5 (0.37)	6820 (470)
14	-WLU-MTS14	31.7 (1.25)	23.8 (0.94)	10.0 (0.39)	20.6 (0.81)	10.4 (0.41)	6930 (478)
16	-WLU-MTS16	34.7 (1.37)	23.8 (0.94)	10.4 (0.41)	20.6 (0.81)	12.7 (0.50)	6190 (426)

Union 45° Elbows

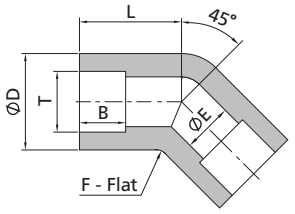

Fractional Tube

T-Tube Size (in.)	Basic Ordering Number	Dimensions, in. (mm)					Working Pressure psig (bar)
		L	D	B	F	E	
1/4	SS-WV-TS4	0.59 (15.0)	0.58 (14.7)	0.28 (7.1)	0.50 (12.7)	0.19 (4.8)	10700 (737)
3/8	SS-WV-TS6	0.78 (19.7)	0.65 (16.5)	0.31 (7.9)	0.56 (14.3)	0.28 (7.1)	8100 (558)
1/2	SS-WV-TS8	0.84 (21.3)	0.80 (20.2)	0.38 (9.7)	0.69 (17.5)	0.41 (10.4)	6600 (454)
3/4	SS-WV-TS12	1.13 (28.7)	1.15 (29.3)	0.44 (11.2)	1.00 (25.4)	0.63 (16.0)	5900 (406)
1	SS-WV-TS16	1.57 (40.0)	1.59 (40.3)	0.62 (15.7)	1.37 (34.9)	0.88 (22.4)	5600 (385)

Metric Tube

T-Tube Size (mm)	Basic Ordering Number	Dimensions, mm (in.)					Working Pressure psig (bar)
		L	D	B	F	E	
8	SS-WV-MTS8	17.3 (0.68)	14.7 (0.58)	7.9 (0.31)	12.7 (0.50)	6.4 (0.25)	9790 (675)
10	SS-WV-MTS10	19.1 (0.75)	16.5 (0.65)	7.9 (0.31)	14.3 (0.56)	7.4 (0.29)	8100 (558)
12	SS-WV-MTS12	21.3 (0.84)	20.2 (0.80)	9.7 (0.38)	17.5 (0.69)	9.5 (0.37)	6820 (470)
14	SS-WV-MTS14	26.4 (1.04)	23.8 (0.94)	10.0 (0.39)	20.6 (0.81)	10.4 (0.41)	6930 (478)
16	SS-WV-MTS16	26.4 (1.04)	23.8 (0.94)	10.4 (0.41)	20.6 (0.81)	12.7 (0.50)	6190 (426)
20	SS-WV-MTS20	28.7 (1.13)	29.3 (1.15)	11.2 (0.44)	25.4 (1.00)	17.0 (0.67)	5510 (380)
22	SS-WV-MTS22	29.7 (1.17)	31.2 (1.23)	13.5 (0.53)	27.0 (1.06)	19.0 (0.75)	5700 (396)
23	SS-WV-MTS25	40.0 (1.57)	40.3 (1.59)	15.7 (0.62)	34.9 (1.37)	22.0 (0.87)	5450 (376)

Union Tees

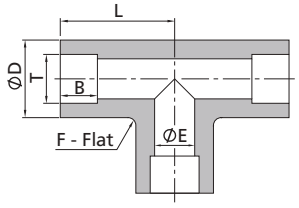

Fractional Tube

T-Tube Size (in.)	Basic Ordering Number	Dimensions, in. (mm)					Working Pressure psig (bar)
		L	D	B	F	E	
1/8	-WT-TS2	0.59 (15.0)	0.39 (10.0)	0.10 (2.5)	0.44 (11.1)	0.09 (2.3)	12600 (868)
1/4	-WT-TS4	0.86 (21.8)	0.50 (12.8)	0.28 (7.1)	0.44 (11.1)	0.19 (4.8)	10700 (737)
3/8	-WT-TS6	1.04 (26.4)	0.65 (16.5)	0.31 (7.9)	0.56 (14.3)	0.28 (7.1)	8100 (558)
1/2	-WT-TS8	1.17 (29.7)	0.80 (20.2)	0.38 (9.7)	0.69 (17.5)	0.41 (10.4)	6600 (454)
5/8	-WT-TS10	1.42 (36.1)	0.94 (23.8)	0.41 (10.4)	0.81 (20.6)	0.50 (12.7)	6200 (428)
3/4	-WT-TS12	1.56 (39.6)	1.15 (29.3)	0.44 (11.2)	1.00 (25.4)	0.63 (16.0)	5900 (406)
1	-WT-TS16	1.92 (48.8)	1.44 (36.7)	0.62 (15.7)	1.25 (31.8)	0.88 (22.4)	5600 (385)

Metric Tube

T-Tube Size (mm)	Basic Ordering Number	Dimensions, mm (in.)					Working Pressure psig (bar)
		L	D	B	F	E	
8	-WT-MTS8	19.8 (0.78)	14.7 (0.58)	7.9 (0.31)	12.7 (0.50)	6.4 (0.25)	9790 (675)
10	-WT-MTS10	24.6 (0.97)	16.5 (0.65)	7.9 (0.31)	14.3 (0.56)	7.4 (0.29)	8100 (558)
12	-WT-MTS12	29.7 (1.17)	20.2 (0.80)	9.7 (0.38)	17.5 (0.69)	9.5 (0.37)	6820 (470)
14	-WT-MTS14	31.7 (1.25)	23.8 (0.94)	10.0 (0.39)	20.6 (0.81)	10.4 (0.41)	6930 (478)
16	-WT-MTS16	36.0 (1.42)	23.8 (0.94)	10.4 (0.41)	20.6 (0.81)	12.7 (0.50)	6190 (426)
20	-WT-MTS20	39.6 (1.56)	29.3 (1.15)	11.2 (0.44)	25.4 (1.00)	17.0 (0.67)	5510 (380)
22	-WT-MTS22	41.3 (1.63)	31.2 (1.23)	13.5 (0.53)	27.0 (1.06)	19.0 (0.75)	5700 (396)
25	-WT-MTS25	48.8 (1.92)	36.7 (1.44)	15.7 (0.62)	31.8 (1.25)	22.0 (0.87)	5450 (376)

Union Crosses

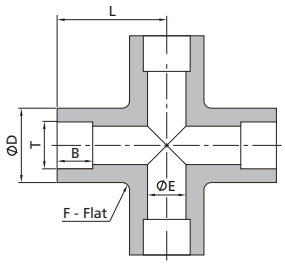

Fractional Tube

T-Tube Size (in.)	Basic Ordering Number	Dimensions, in. (mm)					Working Pressure psig (bar)
		L	D	B	F	E	
1/8	-WC-TS2	0.59 (15.0)	0.43 (11.0)	0.10 (2.5)	0.44 (11.1)	0.09 (2.3)	12600 (863)
1/4	-WC-TS4	0.86 (21.8)	0.50 (12.8)	0.28 (7.1)	0.44 (11.1)	0.19 (4.8)	10700 (737)
3/8	-WC-TS6	1.04 (26.4)	0.58 (14.7)	0.31 (7.9)	0.50 (12.7)	0.28 (7.1)	8100 (558)
1/2	-WC-TS8	1.17 (29.7)	0.80 (20.2)	0.38 (9.7)	0.69 (17.5)	0.41 (10.4)	6600 (454)
5/8	-WC-TS10	1.42 (36.1)	0.94 (23.8)	0.41 (10.4)	0.81 (20.6)	0.50 (12.7)	6200 (428)
3/4	-WC-TS12	1.56 (39.6)	1.15 (29.3)	0.44 (11.2)	1.00 (25.4)	0.63 (16.0)	5900 (406)
1	-WC-TS16	1.92 (48.8)	1.44 (36.7)	0.62 (15.7)	1.25 (31.8)	0.88 (22.4)	5600 (385)

Metric Tube

T-Tube Size (mm)	Basic Ordering Number	Dimensions, mm (in.)					Working Pressure psig (bar)
		L	D	B	F	E	
8	-WC-MTS8	19.8 (0.78)	14.7 (0.58)	7.9 (0.31)	12.7 (0.50)	6.4 (0.25)	9790 (675)
10	-WC-MTS10	24.6 (0.97)	16.5 (0.65)	7.9 (0.31)	14.3 (0.56)	7.1 (0.28)	8100 (558)
12	-WC-MTS12	29.7 (1.17)	20.2 (0.80)	9.7 (0.38)	17.5 (0.69)	9.5 (0.37)	6820 (470)
14	-WC-MTS14	31.7 (1.25)	23.8 (0.94)	10.0 (0.39)	20.6 (0.81)	10.4 (0.41)	6930 (478)
16	-WC-MTS16	36.0 (1.42)	23.8 (0.94)	10.4 (0.41)	20.6 (0.81)	12.7 (0.50)	6190 (426)
20	-WC-MTS20	39.6 (1.56)	29.3 (1.15)	11.2 (0.44)	25.4 (1.00)	17.0 (0.67)	5510 (380)
22	-WC-MTS22	1.22 (31.00)	31.2 (1.23)	13.5 (0.53)	27.0 (1.06)	19.0 (0.75)	5700 (396)
25	-WC-MTS25	48.8 (1.92)	36.7 (1.44)	15.7 (0.62)	31.8 (1.25)	22.0 (0.87)	5450 (376)

Pipe Butt Weld Fittings

Male Connectors

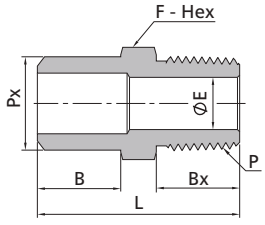

Pipe — **NPT Thread**

Px-Sch80 Pipe Size	P-NPT Size	Basic Ordering Number	Dimensions, in. (mm)					Working Pressure psig (bar)
			L	B	Bx	F	E	
1/4	1/4	-WM-PB4-NS4	1.35 (34.3)	0.56 (14.2)	0.56 (14.2)	0.56 (14.3)	0.28 (7.1)	8000 (551)
1/4	1/2	-WM-PB4-NS8	1.63 (41.3)	0.56 (14.2)	0.75 (19.1)	0.87 (22.2)	0.30 (7.7)	7700 (537)
3/8	1/4	-WM-PB6-NS4	1.37 (34.8)	0.56 (14.2)	0.56 (14.2)	0.69 (17.5)	0.28 (7.1)	6650 (459)
3/8	1/2	-WM-PB6-NS8	1.63 (41.3)	0.56 (14.2)	0.75 (19.1)	0.87 (22.2)	0.42 (10.7)	6650 (459)
1/2	1/4	-WM-PB8-NS4	1.63 (41.3)	0.75 (19.1)	0.56 (14.2)	0.87 (22.2)	0.28 (7.1)	6190 (427)
1/2	1/2	-WM-PB8-NS8	1.82 (46.2)	0.75 (19.1)	0.75 (19.1)	0.87 (22.2)	0.47 (11.9)	6190 (427)
3/4	1/4	-WM-PB12-NS4	1.69 (42.9)	0.75 (19.1)	0.56 (14.2)	1.06 (27.0)	0.28 (7.1)	5040 (348)
3/4	1/2	-WM-PB12-NS8	1.88 (47.8)	0.75 (19.1)	0.75 (19.1)	1.06 (27.0)	0.47 (11.9)	5040 (348)
1	1/4	-WM-PB16-NS4	1.97 (50.0)	0.94 (23.9)	0.56 (14.2)	1.37 (34.9)	0.28 (7.1)	4640 (320)
1	1/2	-WM-PB16-NS8	2.16 (54.9)	0.94 (23.9)	0.75 (19.1)	1.37 (34.9)	0.47 (11.9)	4640 (320)

Female Connectors

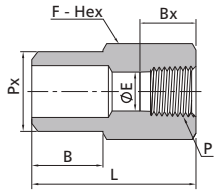

Pipe								NPT Thread
Px-Sch80 Pipe Size	P-NPT Size	Basic Ordering Number	Dimensions, in. (mm)					Working Pressure psig (bar)
			L	B	Bx	F	E	
1/4	1/2	-WF-PB4-NS8	1.53 (38.9)	0.56 (14.2)	0.78 (19.8)	1.06 (27.0)	0.30 (7.6)	4900 (337)
3/8	1/2	-WF-PB6-NS8	1.53 (38.9)	0.56 (14.2)	0.78 (19.8)	1.06 (27.0)	0.42 (10.7)	4900 (337)
1/2	1/4	-WF-PB8-NS4	1.47 (37.3)	0.75 (19.1)	0.59 (15.0)	0.87 (22.2)	0.41 (10.4)	7500 (516)
1/2	1/2	-WF-PB8-NS8	1.72 (43.7)	0.75 (19.1)	0.78 (19.8)	1.06 (27.0)	0.55 (13.9)	4900 (337)

Pipe Socket Weld Fittings

Male Connectors

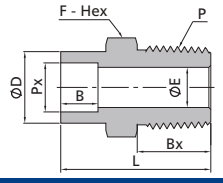

Pipe								NPT Thread
Px-Pipe Size	P-NPT Size	Basic Ordering Number	Dimensions, in. (mm)					Working Pressure psig (bar)
			L	D	B	Bx	F	E	
1/4	1/4	-WM-PS4-NS4	1.39 (35.2)	0.88 (22.4)	0.39 (9.9)	0.56 (14.2)	0.94 (23.8)	0.28 (7.1)	8000 (551)
1/4	1/2	-WM-PS4-NS8	1.57 (40.0)	0.88 (22.4)	0.39 (9.9)	0.75 (19.1)	0.94 (23.8)	0.36 (9.1)	7700 (530)
3/8	3/8	-WM-PS6-NS6	1.50 (38.0)	1.03 (26.2)	0.39 (9.9)	0.56 (14.2)	1.06 (27.0)	0.38 (9.7)	7100 (489)
3/8	1/2	-WM-PS6-NS8	1.69 (42.9)	1.03 (26.2)	0.39 (9.9)	0.75 (19.1)	1.06 (27.0)	0.47 (11.9)	7100 (489)
1/2	3/8	-WM-PS8-NS6	1.59 (40.3)	1.25 (31.8)	0.39 (9.9)	0.56 (14.2)	1.31 (33.3)	0.38 (9.7)	6800 (468)
1/2	1/2	-WM-PS8-NS8	1.78 (45.2)	1.25 (31.8)	0.39 (9.9)	0.75 (19.1)	1.31 (33.3)	0.47 (11.9)	6800 (468)
3/4	1/2	-WM-PS12-NS8	2.14 (54.3)	1.47 (37.3)	0.51 (13.0)	0.75 (19.1)	1.50 (38.1)	0.47 (11.9)	5800 (399)
3/4	3/4	-WM-PS12-NS12	2.14 (54.3)	1.47 (37.3)	0.51 (13.0)	0.75 (19.1)	1.50 (38.1)	0.62 (15.7)	5800 (399)
1	3/4	-WM-PS16-NS12	2.20 (55.8)	1.86 (47.2)	0.51 (13.0)	0.75 (19.1)	1.87 (47.6)	0.62 (15.7)	6100 (420)
1	1	-WM-PS16-NS16	2.39 (60.6)	1.86 (47.2)	0.51 (13.0)	0.94 (23.9)	1.87 (47.6)	0.88 (22.4)	5300 (365)

Female Connectors

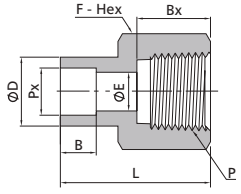

Pipe									NPT Thread
Px-Pipe Size	P-NPT Size	Basic Ordering Number	Dimensions, in. (mm)						Working Pressure psig (bar)
			L	D	B	Bx	F	E	
1/4	1/4	-WF-PS4-NS4	1.32 (33.5)	0.88 (22.4)	0.39 (9.9)	0.59 (15.0)	0.94 (23.8)	0.36 (9.1)	8000 (551)
1/4	3/8	-WF-PS4-NS6	1.32 (33.5)	0.88 (22.4)	0.39 (9.9)	0.59 (15.0)	0.94 (23.8)	0.36 (9.1)	6790 (463)
3/8	3/8	-WF-PS6-NS6	1.34 (34.1)	1.03 (26.2)	0.39 (9.9)	0.59 (15.0)	1.06 (27.0)	0.49 (12.4)	7100 (489)
3/8	1/2	-WF-PS6-NS8	1.54 (39.1)	1.03 (26.2)	0.39 (9.9)	0.78 (19.8)	1.06 (27.0)	0.49 (12.4)	4900 (337)
1/2	1/2	-WF-PS8-NS8	1.57 (40.0)	1.25 (31.8)	0.39 (9.9)	0.78 (19.8)	1.31 (33.3)	0.62 (15.7)	6800 (468)
1/2	3/4	-WF-PS8-NS12	1.60 (40.6)	1.25 (31.8)	0.39 (9.9)	0.81 (20.6)	1.31 (33.3)	0.62 (15.7)	4600 (316)
3/4	3/4	-WF-PS12-NS12	2.09 (53.2)	1.47 (37.3)	0.51 (13.0)	0.81 (20.6)	1.50 (38.1)	0.82 (20.8)	5800 (399)
3/4	1	-WF-PS12-NS16	2.29 (58.1)	1.47 (37.3)	0.51 (13.0)	1.00 (25.4)	1.63 (41.3)	0.82 (20.8)	4400 (303)

Unions

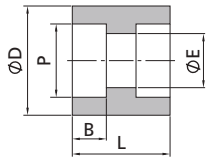

Pipe						
P-Pipe Size	Basic Ordering Number	Dimensions, in. (mm)				Working Pressure psig (bar)
		L	D	B	E	
1/8	-WU-PS2	1.01 (25.7)	0.67 (17.1)	0.39 (9.9)	0.28 (7.0)	8230 (568)
1/4	-WU-PS4	1.06 (26.9)	0.88 (22.4)	0.39 (9.9)	0.38 (9.7)	8000 (551)
3/8	-WU-PS6	1.12 (28.4)	1.03 (26.2)	0.39 (9.9)	0.49 (12.4)	7100 (489)
1/2	-WU-PS8	1.16 (29.5)	1.25 (31.8)	0.39 (9.9)	0.62 (15.7)	6800 (468)
3/4	-WU-PS12	1.75 (44.5)	1.47 (37.3)	0.51 (13.0)	0.82 (20.8)	5800 (399)
1	-WU-PS16	1.75 (44.5)	1.86 (47.2)	0.51 (13.0)	1.05 (26.7)	6100 (420)

Weld Adapters

Tube Butt Weld to Tube Socket Weld

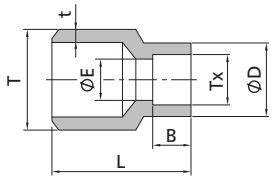

Fractional Tube								
T-Tube O.D. (in.)	t-Wall Thickness (in.)	Tx-Tube O.D. (in.)	Basic Ordering Number	Dimensions, in. (mm)				Working Pressure psig (bar)
				L	B	D	E	
1/4	0.083	1/8	-WA-TB4-TS2	0.56 (14.2)	0.10 (2.5)	0.31 (8.0)	0.09 (2.3)	12600 (868)
3/8	0.095	1/4	-WA-TB6-TS4	0.75 (19.1)	0.28 (7.1)	0.48 (12.2)	0.19 (4.8)	8200 (564)
1/2	0.095	1/4	-WA-TB8-TS4	0.88 (22.4)	0.28 (7.1)	0.50 (12.7)	0.19 (4.8)	7500 (516)
1/2	0.095	3/8	-WA-TB8-TS6	0.88 (22.4)	0.31 (7.9)	0.60 (15.2)	0.28 (7.1)	7500 (516)
3/4	0.120	1/2	-WA-TB12-TS8	1.12 (28.4)	0.38 (9.7)	0.73 (18.5)	0.41 (10.4)	6300 (434)
1	0.134	1/2	-WA-TB16-TS8	1.38 (35.1)	0.38 (9.7)	0.73 (18.5)	0.41 (10.4)	5300 (365)
1	0.134	3/4	-WA-TB16-TS12	1.50 (38.1)	0.44 (11.2)	1.04 (26.4)	0.63 (16.0)	5300 (365)

Pipe Butt Weld to Tube Socket Weld

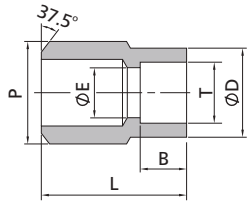

Pipe							Fractional Tube
P-Sch80 Pipe Size	T-Tube Size (in.)	Basic Ordering Number	Dimensions, in. (mm)				Working Pressure psig (bar)
			L	B	D	E	
1/4	1/4	-WA-PB4-TS4	0.88 (22.4)	0.28 (7.1)	0.48 (12.2)	0.19 (4.8)	10810 (744)
3/8	1/4	-WA-PB6-TS4	1.03 (26.2)	0.31 (7.9)	0.48 (12.2)	0.19 (4.8)	8500 (586)
3/8	3/8	-WA-PB6-TS6	1.03 (26.2)	0.31 (7.9)	0.60 (15.2)	0.28 (7.1)	8500 (586)
3/8	1/2	-WA-PB6-TS8	1.00 (25.4)	0.38 (9.7)	0.73 (18.5)	0.41 (10.4)	6930 (476)
1/2	1/4	-WA-PB8-TS4	1.12 (28.4)	0.28 (7.1)	0.48 (12.2)	0.19 (4.8)	8190 (563)
1/2	3/8	-WA-PB8-TS6	1.12 (28.4)	0.31 (7.9)	0.60 (15.2)	0.28 (7.1)	8190 (563)
1/2	1/2	-WA-PB8-TS8	1.19 (30.2)	0.38 (9.7)	0.73 (18.5)	0.41 (10.4)	6930 (476)
3/4	1/4	-WA-PB12-TS4	1.50 (38.1)	0.28 (7.1)	0.48 (12.2)	0.19 (4.8)	6930 (476)
3/4	3/8	-WA-PB12-TS6	1.50 (38.1)	0.31 (7.9)	0.60 (15.2)	0.28 (7.1)	6930 (476)
3/4	1/2	-WA-PB12-TS8	1.50 (38.1)	0.38 (9.7)	0.73 (18.5)	0.41 (10.4)	6930 (476)
3/4	3/4	-WA-PB12-TS12	1.50 (38.1)	0.44 (11.2)	1.04 (26.4)	0.63 (16.0)	6190 (483)
1	3/8	-WA-PB16-TS6	1.38 (35.1)	0.31 (7.9)	0.60 (15.2)	0.28 (7.1)	6300 (434)
1	1/2	-WA-PB16-TS8	1.56 (39.6)	0.38 (9.7)	0.73 (18.5)	0.41 (10.4)	6300 (434)

Pipe to Weld Fittings

Pipe to Tube Butt Weld

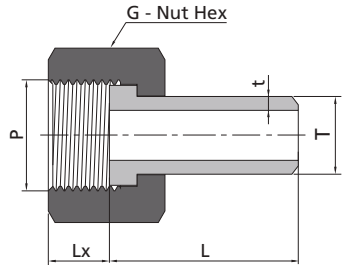

ISO Parallel Thread							Metric Tube
P-ISO Thread Size	T-Tube O.D. (mm)	t-Wall Thickness (mm)	Basic Ordering Number	Dimensions, mm (in.)			Working Pressure psig (bar)
				L	G	Lx	
1/2	12	2.2	-PUW-RG8-MTB12	34.0 (1.34)	27.0 (1.06)	11.0 (0.43)	6470 (446)
1/2	14	2.5	-PUW-RG8-MTB14	34.0 (1.34)	27.0 (1.06)	11.0 (0.43)	6280 (433)
1/2	16	2.8	-PUW-RG8-MTB16	34.0 (1.34)	27.0 (1.06)	11.0 (0.43)	6140 (423)

Metric Thread							Metric Tube
P-Metric Thread Size	T-Tube O.D. (mm)	t-Wall Thickness (mm)	Basic Ordering Number	Dimensions, mm (in.)			Working Pressure psig (bar)
				L	G	Lx	
M12 x 1.5	6	1.8	-PUW-MS12-MTB6	25.0 (0.98)	16.0 (0.63)	9.0 (0.35)	12660 (873)
M12 x 1.5	8	1.8	-PUW-MS12-MTB8	30.0 (1.18)	16.0 (0.63)	9.0 (0.35)	8320 (574)
M14 x 1.5	8	1.8	-PUW-MS14-MTB8	30.0 (1.18)	18.0 (0.71)	9.0 (0.35)	8320 (574)
M14 x 1.5	10	2.2	-PUW-MS14-MTB10	30.0 (1.18)	18.0 (0.71)	9.0 (0.35)	8160 (563)
M16 x 1.5	8	1.8	-PUW-MS16-MTB8	30.0 (1.18)	22.0 (0.87)	9.0 (0.35)	8320 (574)
M16 x 1.5	10	2.2	-PUW-MS16-MTB10	30.0 (1.18)	22.0 (0.87)	9.0 (0.35)	8160 (563)
M16 x 1.5	12	2.2	-PUW-MS16-MTB12	34.0 (1.34)	22.0 (0.87)	9.0 (0.35)	6470 (446)
M18 x 1.5	10	2.2	-PUW-MS18-MTB10	34.0 (1.34)	22.0 (0.87)	10.0 (0.39)	8160 (563)
M18 x 1.5	12	2.2	-PUW-MS18-MTB12	34.0 (1.34)	22.0 (0.87)	10.0 (0.39)	6470 (446)
M18 x 1.5	14	2.5	-PUW-MS18-MTB14	34.0 (1.34)	22.0 (0.87)	10.0 (0.39)	6280 (433)
M20 x 1.5	10	2.2	-PUW-MS20-MTB10	34.0 (1.34)	25.0 (0.98)	11.0 (0.43)	8160 (563)
M20 x 1.5	12	2.2	-PUW-MS20-MTB12	34.0 (1.34)	25.0 (0.98)	11.0 (0.43)	6470 (446)
M20 x 1.5	14	2.5	-PUW-MS20-MTB14	34.0 (1.34)	25.0 (0.98)	11.0 (0.43)	6280 (433)
M20 x 1.5	15	2.5	-PUW-MS20-MTB15	34.0 (1.34)	25.0 (0.98)	11.0 (0.43)	6160 (425)
M20 x 1.5	16	2.8	-PUW-MS20-MTB16	34.0 (1.34)	25.0 (0.98)	11.0 (0.43)	6140 (423)
M22 x 1.5	14	2.5	-PUW-MS22-MTB14	34.0 (1.34)	27.0 (1.06)	11.0 (0.43)	6280 (433)
M22 x 1.5	16	2.8	-PUW-MS22-MTB16	34.0 (1.34)	27.0 (1.06)	11.0 (0.43)	6140 (423)
M24 x 1.5	16	2.8	-PUW-MS24-MTB16	34.0 (1.34)	30.0 (1.18)	11.0 (0.43)	6140 (423)
M24 x 1.5	18	2.8	-PUW-MS24-MTB18	34.0 (1.34)	30.0 (1.18)	11.0 (0.43)	5670 (392)
M24 x 1.5	20	3.0	-PUW-MS24-MTB20	34.0 (1.34)	30.0 (1.18)	11.0 (0.43)	5110 (352)
M27 x 2	14	2.5	-PUW-MS27-MTB14	34.0 (1.34)	32.0 (1.26)	14.0 (0.55)	6280 (433)
M27 x 2	16	2.8	-PUW-MS27-MTB16	34.0 (1.34)	32.0 (1.26)	14.0 (0.55)	6140 (423)
M27 x 2	18	2.8	-PUW-MS27-MTB18	34.0 (1.34)	32.0 (1.26)	14.0 (0.55)	5670 (392)
M27 x 2	20	3.0	-PUW-MS27-MTB20	40.0 (1.57)	32.0 (1.26)	14.0 (0.55)	5110 (352)
M27 x 2	22	3.0	-PUW-MS27-MTB22	40.0 (1.57)	32.0 (1.26)	14.0 (0.55)	4620 (319)
M30 x 2	22	3.0	-PUW-MS30-MTB22	40.0 (1.57)	35.0 (1.38)	18.0 (0.71)	4620 (319)
M30 x 2	25	3.5	-PUW-MS30-MTB25	45.0 (1.77)	35.0 (1.38)	18.0 (0.71)	4730 (326)
M33 x 2	28	4.0	-PUW-MS33-MTB28	45.0 (1.77)	41.0 (1.61)	18.0 (0.71)	5160 (356)
M36 x 2	30	4.0	-PUW-MS36-MTB30	45.0 (1.77)	41.0 (1.61)	18.0 (0.71)	4760 (328)

Male Pipe to Tube Butt Weld

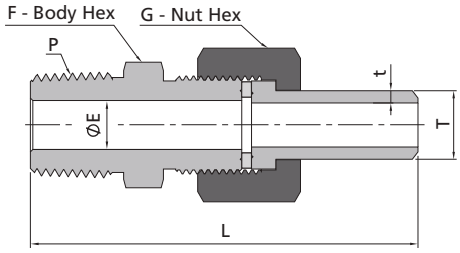

NPT Thread								Metric Tube
P-NPT Size	T-Tube O.D. (mm)	t-Wall Thickness (mm)	Basic Ordering Number	Dimensions, mm (in.)				Working Pressure psig (bar)
				L	F	G	E	
1/8	14	2.5	-MUW-NS2-MTB14	68.7 (2.70)	22.2 (0.87)	25.0 (0.98)	4.8 (0.19)	6280 (433)
1/4	6	1.8	-MUW-NS4-MTB6	60.4 (2.38)	14.3 (0.56)	16.0 (0.63)	6.0 (0.24)	8240 (566)
1/4	8	1.8	-MUW-NS4-MTB8	65.4 (2.57)	14.3 (0.56)	16.0 (0.63)	6.0 (0.24)	8240 (566)
1/4	10	2.2	-MUW-NS4-MTB10	73.2 (2.88)	22.2 (0.87)	25.0 (0.98)	7.1 (0.28)	8160 (563)
1/4	12	2.2	-MUW-NS4-MTB12	71.2 (2.80)	17.5 (0.69)	22.0 (0.87)	7.1 (0.28)	6470 (446)
1/4	14	2.5	-MUW-NS4-MTB14	73.2 (2.88)	22.2 (0.87)	25.0 (0.98)	7.1 (0.28)	6280 (433)
1/4	16	2.8	-MUW-NS4-MTB16	73.2 (2.88)	22.2 (0.87)	25.0 (0.98)	7.1 (0.28)	6140 (423)
1/4	18	2.8	-MUW-NS4-MTB18	74.2 (2.92)	25.4 (1.00)	30.0 (1.18)	7.1 (0.28)	5670 (392)
3/8	14	2.5	-MUW-NS6-MTB14	73.2 (2.88)	19.1 (0.75)	22.0 (0.87)	9.5 (0.37)	6280 (433)
1/2	12	2.2	-MUW-NS8-MTB12	78.0 (3.07)	22.2 (0.87)	25.0 (0.98)	10.0 (0.39)	6470 (446)
1/2	14	2.5	-MUW-NS8-MTB14	78.0 (3.07)	22.2 (0.87)	25.0 (0.98)	10.0 (0.39)	6280 (433)
1/2	16	2.8	-MUW-NS8-MTB16	78.0 (3.07)	22.2 (0.87)	25.0 (0.98)	10.0 (0.39)	6140 (423)
1/2	22	3.0	-MUW-NS8-MTB22	88.0 (3.46)	28.6 (1.13)	32.0 (1.26)	11.9 (0.47)	4620 (319)
1/2	25	2.8	-MUW-NS8-MTB25	88.0 (3.46)	31.75 (1.25)	35.0 (1.38)	11.9 (0.47)	4730 (326)
1	25	3.5	-MUW-NS16-MTB25	103.8 (4.09)	34.9 (1.37)	35.0 (1.38)	19.4 (0.76)	4730 (326)

Ordering Number Description

SS - WLM - TS6 - NS6 - □ - □ - S - □

Material	
SS	316 SS
6L	316L SS
904L	904L SS

Fitting Type	
WM	Male Connector
WF	Female Connector
WU	Reducing Union
WLU	Union Elbow
WT	Union Tee
WC	Union Cross
WLM	Male Elbow
WLF	Female Elbow
WV	45° Union Elbow
WA	Adapter
PUW	Pipe To Weld
MUW	Male Pipe To Weld

P1 Type	
TB	Fractional Tube Butt Weld
TS	Fractional Tube Socket Weld
MTB	Metric Tube Butt Weld
MTS	Metric Tube Socket Weld
PB	Pipe Butt Weld
PS	Pipe Socket Weld
NS	NPT Thread
RT	ISO Tapered Thread
BP	Male ISO Parallel Thread (For RG Gasket)
MS	Metric Thread (For RG-M Gasket)
RG	ISO Parallel Thread (For RG Gasket)

P1 Size	
2	1/8"
4	1/4" or 1/4"×0.065" or 1/4×SCH80
6	3/8" or 3/8"×0.095" or 3/8×SCH80 or 6 mm
8	1/2" or 1/2"×0.065" or 1/2×SCH80 or 8 mm or G1/2
10	5/8" or 5/8"×0.109" or 10 mm
12	3/4" or 3/4"×0.120" or 3/4×SCH80 or 12 mm or 12×2.2 mm or M12×1.5
14	7/8" or 14 mm or 14×2.5 mm or M14×1.5
15	15×2.5 mm
16	1" or 1"×0.120" or 1×SCH80 or 16 mm or 16×2.8 mm or M16×1.5
18	18 mm or 18×2.8 mm or M18×1.5
20	1 1/4" or 20 mm or 20×3.0 mm or M20×1.5
22	22 mm or 22×3.0 mm or M22×1.5
24	24 x 1.5
25	25 mm or 25×3.5 mm
27	M27 x 2
28	28 mm or 28×4.0 mm
30	M30 x 2
33	M33×2
36	M36×2
38	38 mm or 38×5.0 mm

P2, P3 and P4
Specified in the same way as P1

Special Application	
	NO
S	NACE MR0175
ES	Customized for Europe
Classification for Nuclear Facility Application	
N2	Class 2
N3	Class 3

Cleaning and Packaging	
	FC-01
F2	FC-02

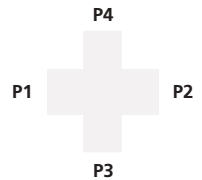

Note: "Ordering Number Description" is a reference to understand the combination rules of FITOK product part number. Not all combinations are available.

P1, P2, P3 and P4 shall be described in the following orders:

- ◎ Pipe thread connection type after weld connection type ("PUW" and "MUW" excluded)
- ◎ Pipe Butt Weld - Tube Butt Weld - Pipe Socket Weld - Tube Socket Weld - Others
- ◎ Describe in descending order as per size if the end connection types are the same
- ◎ Describe the end of P1 if all end connections are the same

Cleaning and Packaging:

FC-01: Standard cleaning and packaging for general industrial procedures

FC-02: Special cleaning and packaging for wetted system components to ensure compliance with product cleanliness requirement as stated in ASTM G93 Level C.

Ball Valves, Plug Valves

Ball Valves  B-02

Plug Valves  B-76

Ball Valves

BF, BFH, BG, BH, BO, BP, BR, BRC, BV, BK and BU Series



Contents

Trunnion Ball Valves
BF and BFH Series



B-04

3-Piece Ball Valves
BG Series



B-11

3-Piece Ball Valves
BH Series



B-16

One-Piece Instrumentation Ball Valves
BO Series



B-24

Bar Stock Ball Valves
BP Series



B-38

Hex Bar Stock Ball Valves
BR Series



B-45

Hex Bar Stock Ball Valves
BRC Series



B-52

High Performance Ball Valves
BV Series



B-57

High Temperature Metal-Seated Ball Valves
BK Series



B-67

Alternative Fuel Service (AFS) Ball Valves
BU Series



B-71

Important Information about Ball Valves

◎ FITOK ball valves are designed to be used in fully open or fully closed position.
◎ Packing adjustment may be required during the service life of the valve (except for BF, BFH and BU series).
◎ For better quality maintenance, FITOK ball valves should be kept in fully open position in warehouse.
◎ Valves that have not been actuated for a period of time may have a higher initial actuation torque.

Trunnion Ball Valves

BF and BFH Series

Features



- Working pressure up to: 10,000 psig (690 bar)
- Working temperature: 0°F to 450°F (-18°C to 232°C)
- Orifice size: 0.19" (4.8 mm)
- Fixed ball with double sealing
- Trunnion-style ball to prevent ball blowout
- Automatic compensation of seat sealing
- Low operating torque
- Blowout proof stem
- Handle as indicator of flow direction
- Positive handle stop
- Handle color options available
- Pneumatic and electric actuator available
- Panel mountable
- Leak-tight performance testing with nitrogen or compressed air for every valve at the rated pressure (not higher than 6000 psig) to meet the requirement of no visible leak
- Compact maximum-flow design
- 2- or 3-way flow patterns
- Spring-load seats to provide leak tight integrity in both low-and high-pressure systems and reduce seat wear from pressure surges
- The inlet of 3-way valve can be any port
- Low-temperature service option available
- BF series 3-way ball valves for "fast fill" CNG filling station application available
- BF series ball valves with ECE R110 type approval available

Pressure vs. Temperature

BF Series

316 SS Body

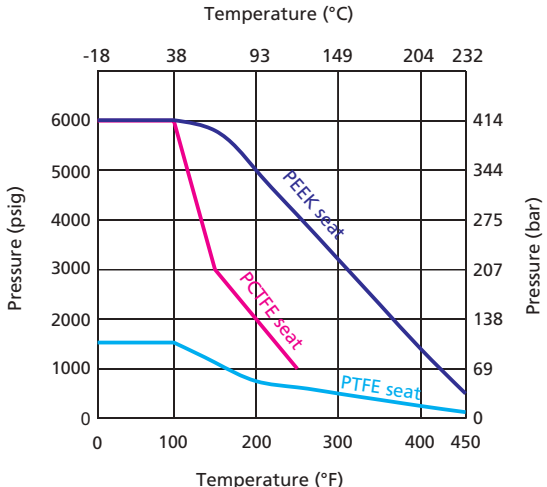

Alloy 400 Body

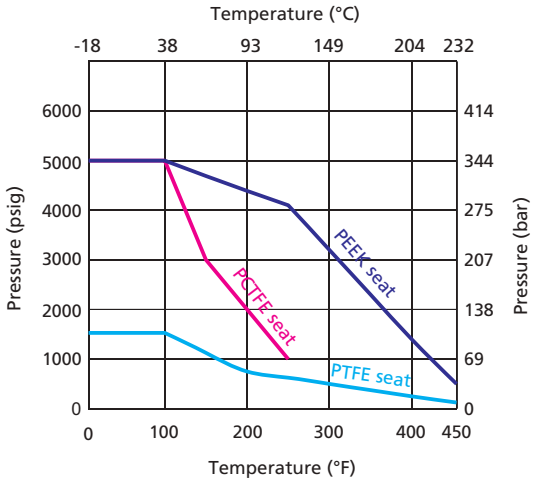

BFH Series

316 SS Body

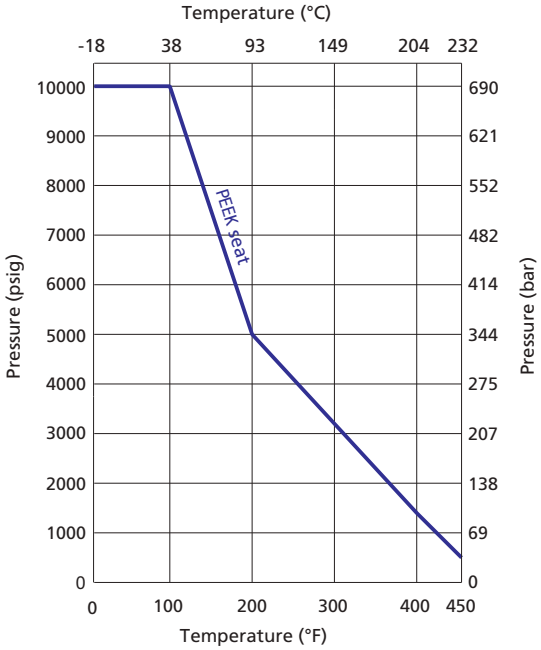

Pressure Rating@100°F (38°C)

Material	End Connection	Pressure Rating, psig (bar)
316 SS	FNS2, FNS4 FL4, ML6	10000 (690)
	ML10	8400 (578)
	FL6/ML8	7500 (516)
	FL8	6700 (461)
	ML12	6800 (470)

Note: Maximum working pressure of BFH Series ball valves is 10,000 psig. The specified pressure rating is restricted by end connections.

Standard Materials of Construction

BF Series

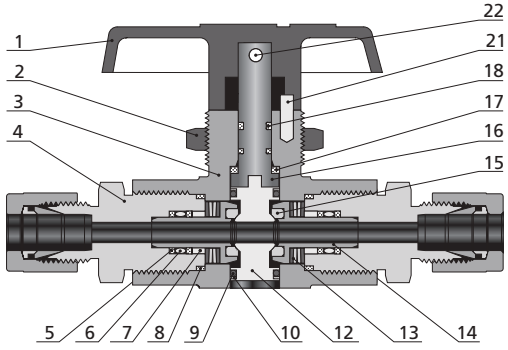

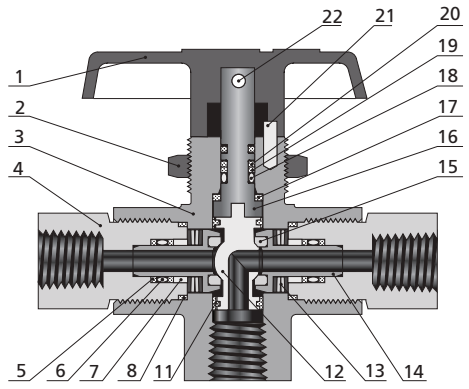

Item	Component	Valve Body Material			
		316 SS		Alloy 400	
		2-way	3-way	2-way	3-way
		Material Grade/ASTM Specification			
1	Handle	Nylon with SS insert			
2	Panel Nut	316 SS/A479			
3	*Body*	*F316 SS/A182*		*Alloy 400/B164*	
4	*End Connection*	*316 SS/A479*		*Alloy 400/B164*	
5	*Seat Retainer Backup Ring*	*Reinforced PTFE*			
6	*Seat Retainer O-ring*	*Fluorocarbon FKM*			
7	*Seat Retainer Guide*	*316 SS/A479*		*Alloy 400/B164*	
8	*End Connection Seal*	*Silver-plated 316L/A269*			
9	*Trunnion O-ring*	*Fluorocarbon FKM*	——	*Fluorocarbon FKM*	——
10	Trunnion Backup Ring	Reinforced PTFE	——	Reinforced PTFE	——
11	*Trunnion Bearing*	——	*PEEK*	——	PEEK
12	*Ball*	*316 SS/A479*	*S21800/A479*	*Alloy 400/B164*	
13	*Seat Spring*	*Alloy X-750/AMS 5542*			
14	*Seat Retainer*	*316 SS/A479*		*Alloy 400/B164*	
15	*Seat*	*PTFE or PEEK or PCTFE*			
16	*Stem*	*316 SS/A479*		*Alloy 400/B164*	
17	*Stem Washer*	*PEEK*			
18	*Stem O-ring*	*Fluorocarbon FKM*		*Fluorocarbon FKM*	
19	Secondary Stem Backup Ring	——	PTFE/D1710	——	PTFE/D1710
20	Primary Stem Backup Ring	——	PEEK	——	PEEK
21	Stop Pin	SS			
22	Set Screw	Zinc-plated carbon steel			
Lubricants		*Fluorinated-based*			

Notes: Wetted components are listed in italics.
1. Ball trunnions are PTFE coated for BF series 2-way valves.
2. For other materials, please contact FITOK Group or our authorized distributors.

BFH Series

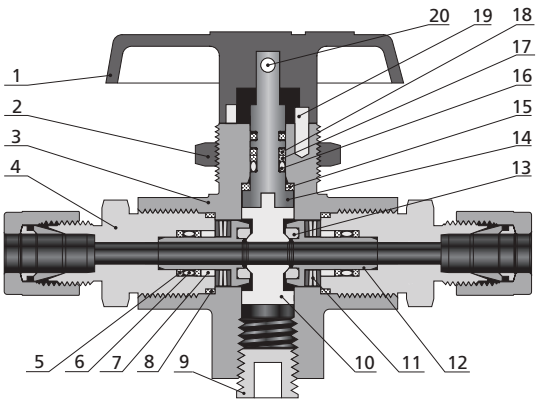

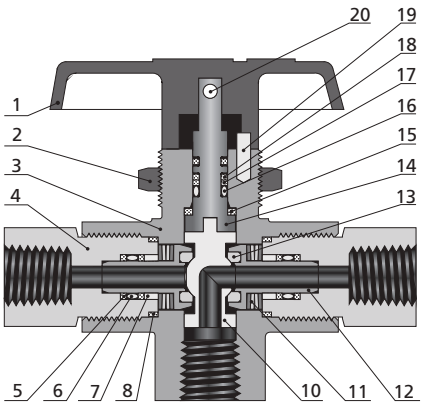

Item	Component	2-way / 3-way
		Material Grade/ASTM Specification
1	Handle	Nylon with SS insert
2	Panel Nut	316 SS/A479
3	*Body*	*316 SS/A479*
4	*End Connection*	*316 SS/A479*
5	*Seat Retainer Backup Ring*	*Reinforced PTFE*
6	*Seat Retainer O-ring*	*Fluorocarbon FKM*
7	*Seat Retainer Guide*	*316 SS/A479*
8	*End Connection Seal*	*Silver-plated 316L/A269*
9	*Plug*	*316 SS/A479*
10	*Ball*	*S21800/A479*
11	*Seat Spring*	*Alloy X-750/AMS 5542*
12	*Seat Retainer*	*316 SS/A479*
13	*Seat*	*PEEK*
14	*Stem*	*316 SS/A479*
15	*Stem Washer*	*PEEK*
16	*Stem O-ring*	*Fluorocarbon FKM*
17	Secondary Stem Backup Ring	PTFE/D1710
18	Primary Stem Backup Ring	PEEK
19	Stop Pin	SS
20	Set Screw	Zinc-plated carbon steel
Lubricants		*Fluorinated-based*

Notes: Wetted components are listed in italics.
1. Ball trunnions are PTFE coated for BFH series ball valves.
2. For other materials, please contact FITOK Group or our authorized distributors.

Dimensions

2-way Valves

BF Series

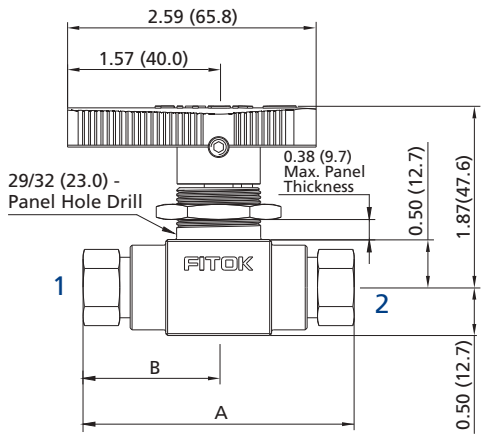

BFH Series

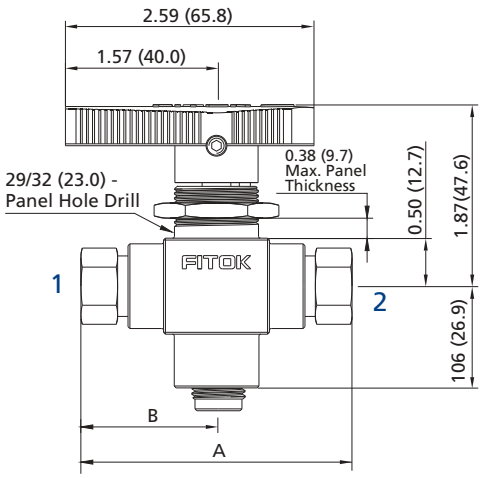

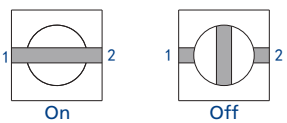

Basic Ordering Number		Connection Type and Size	Orifice in. (mm)	Cv	Dimensions, in. (mm)	
BF Series	BFH Series	Connection 1/2			A	B
BF□□-FNS2	BFH□□-FNS2-P	1/8 Female NPT	0.19 (4.8)	1.2	2.94 (74.7)	1.47 (37.3)
BF□□-FNS4	———	1/4 Female NPT		1.0		
———	BFH□□-FNS4-P				3.93 (99.8)	1.97 (50.0)
BF□□-FNS8	———	1/2 Female NPT		1.2	4.25 (108.0)	2.13 (54.1)
BF□□-FL4	BFH□□-FL4-P	1/4" FITOK		1.6	4.14 (105.2)	2.07 (52.6)
BF□□-FL6	BFH□□-FL6-P	3/8" FITOK		1.4	4.39 (111.5)	2.19 (55.6)
BF□□-FL8	BFH□□-FL8-P	1/2" FITOK		1.0	4.60 (116.8)	2.30 (58.4)
BF□□-ML6	BFH□□-ML6-P	6 mm FITOK		1.6	4.14 (105.2)	2.07 (52.6)
BF□□-ML8	BFH□□-ML8-P	8 mm FITOK		1.5	4.15 (105.4)	
BF□□-ML10	BFH□□-ML10-P	10 mm FITOK		1.3	4.41 (112.0)	2.20 (55.9)
BF□□-ML12	BFH□□-ML12-P	12 mm FITOK		1.0	4.60 (116.8)	2.30 (58.4)

3-way Valves

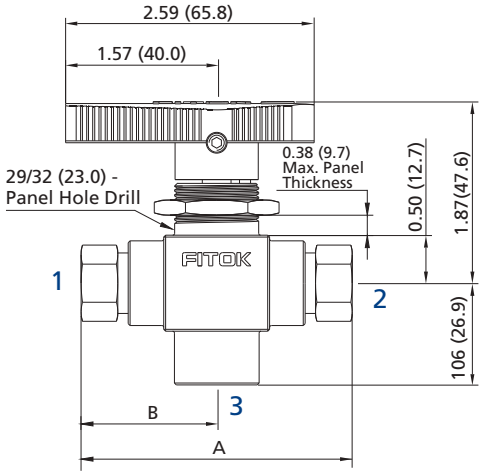

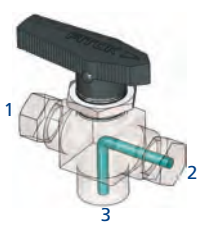

Ports 2 and 3 open

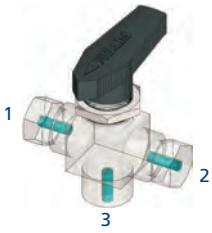

Off

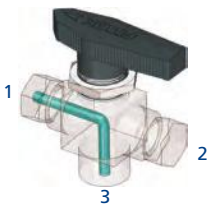

Ports 1 and 3 open

Basic Ordering Number		Connection Type and Size		Orifice in. (mm)	Cv	Dimensions, in. (mm)	
BF Series	BFH Series	Connection 1/2	Connection 3			A	B
BF□□-FNS2-3	BFH□□-FNS2-P-3	1/8 Female NPT	1/4 Female NPT	0.19 (4.8)	0.75	2.94 (74.7)	1.47 (37.3)
BF□□-FNS4-3	———	1/4 Female NPT					
———	BFH□□-FNS4-P-3					3.93 (99.8)	1.97 (50.0)
BF□□-FL4-3	BFH□□-FL4-P-3	1/4" FITOK				4.14 (105.2)	2.07 (52.6)
BF□□-FL6-3	BFH□□-FL6-P-3	3/8" FITOK				4.39 (111.5)	2.19 (55.6)
BF□□-FL8-3	BFH□□-FL8-P-3	1/2" FITOK				4.60 (116.8)	2.30 (58.4)
BF□□-ML6-3	BFH□□-ML6-P-3	6 mm FITOK				4.14 (105.2)	2.07 (52.6)
BF□□-ML8-3	BFH□□-ML8-P-3	8 mm FITOK				4.15 (105.4)	
BF□□-ML10-3	BFH□□-ML10-P-3	10 mm FITOK				4.41 (112.0)	2.20 (55.9)
BF□□-ML12-3	BFH□□-ML12-P-3	12 mm FITOK				4.60 (116.8)	2.30 (58.4)

1. FITOK means FITOK double ferrule tube fittings.
2. Sizes and types listed are standard. Other sizes and types are available upon request, please contact FITOK Group or our authorized distributors.
3. Dimensions are shown with tube fitting nuts finger-tightened. All dimensions are for reference only and are subject to change.
   For dimensions not shown above, please contact FITOK Group or our authorized distributors.
4. Bottom port of all 3-way valves is 1/4 in. female NPT.

Special Application Ball Valves

Low-Temperature Service

BF and BFH series ball valves for low-temperature service, with a temperature rating of -40°F to 200°F (-40°C to 93°C), are available.

Low-temperature service valves have low-temperature NBR O-rings. All other materials are the same as those of standard valves.

To order a valve for low-temperature service, add -**LT** into the valve ordering number.

For example: BFSS-FL4-P-**LT**

BFSS-FL4-P-3-**LT**

Seal kit for field replacement is available, see "Seal Kits" on Page B-09.

Low-Temperature Service BF Series Pressure vs. Temperature

316 SS Body

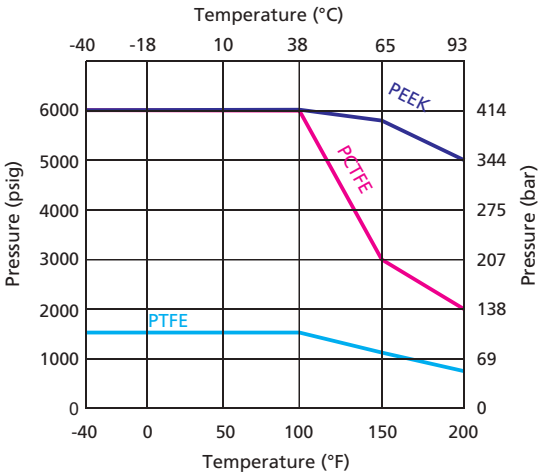

Alloy 400 Body

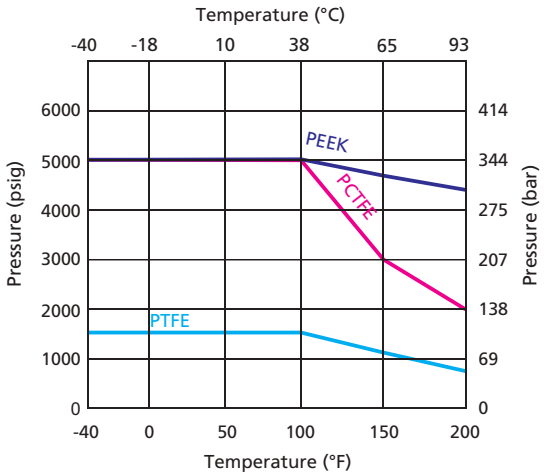

Low-Temperature Service BFH Series Pressure vs. Temperature

316 SS Body

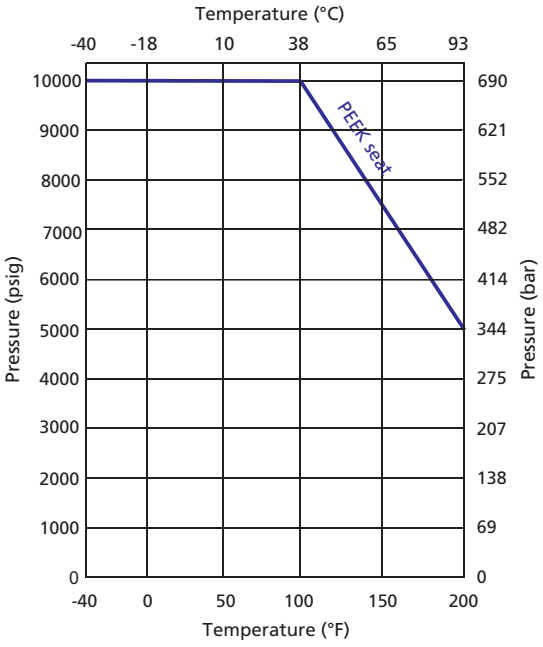

Note: The maximum working pressure for BFH series low-temperature service ball valves is the same as that of standard ball valves.

"Fast Fill" CNG Filling Station Application

BF series 3-way valves for use in "fast-fill" CNG filling station as well as a variety of filling station applications are available.

Features

- ◎ A directional installation with 90 degree actuation for ease of operation during filling
- ◎ 3-way design with vent port for ease of venting after fill
- ◎ PEEK seats to reduce maintenance required in high-cycle applications
- ◎ Cycle life test report available upon request
- ◎ Field repairable with seal kit, see "Seal Kits" on Page B-09

To order, the flow pattern designator should be specified as "**3DL**" in the valve ordering number.

Example: BFSS-FNS4-P-**3DL** (The material and pressure vs. temperature curve are the same with those of BF series standard valves.)

BFSS-FNS4-P-**3DL**-LT (The material and pressure vs. temperature curve are the same with those of BF series low-temperature service valves.)

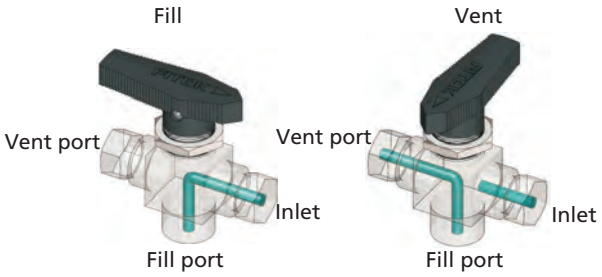

CNG/NGV Application

BF series ball valves with ECE R110 manual valve type approval available.
Classification: Class 0
Temperature rating: -40°F to 248°F (-40°C to 120°C)
Pressure rating: 3770 psig (260 bar)
CNG/NGV application valves have low-temperature FKM O-rings and PEEK seats. All other materials are the same as those of standard valves.
To order a valve for CNG/NGV application, add -**R110** into the valve ordering number.
For example: BFSS-FL4-P-**R110**
BFSS-FL4-P-3-**R110**
Seal kit for field replacement is available, see "Seal Kits" on Page B-09.

Seal Kits

Valve Series	Flow Pattern	Special Application	Basic Seal Kit Ordering Number	Content
BF	2-way	/	BFSS-2-□	Seat retainer backup ring, seat retainer O-ring, seat retainer guide, end connection seal, trunnion O-ring, trunnion backup ring, ball, seat spring, seat retainer, seat, stem, stem washer, stem O-ring, instructions.
		Low-temperature service	BFSS-2-□-LT	
		CNG/NGV application	BFSS-2-P-R110	
	3-way	/	BFSS-3-□	Seat retainer backup ring, seat retainer O-ring, seat retainer guide, end connection seal,trunnion bearing, ball, seat spring, seat retainer, seat, stem, stem washer, stem O-ring, secondary stem backup ring, primary stem backup ring, instructions.
		Low-temperature service	BFSS-3-□-LT	
		"Fast Fill" CNG filling station application	BFSS-3DL-P	
			BFSS-3DL-P-LT	
		CNG/NGV application	BFSS-3-P-R110	
BFH	2-way	/	BFHSS-2-P	Seat retainer backup ring, seat retainer O-ring, seat retainer guide, end connection seal, ball, seat spring, seat retainer, seat, stem, stem washer, stem O-ring, secondary stem backup ring, primary stem backup ring, instructions.
		Low-temperature service	BFHSS-2-P-LT	
	3-way	/	BFHSS-3-P	
		Low-temperature service	BFHSS-3-P-LT	

Seat Material	Designator
PTFE	T
PCTFE	K
PEEK	P

1. Seal kit components are the same materials and grades listed in materials of construction.
2. To order seal kits for BF series standard and low-temperature service ball valves, select a seat designator from the table at left and add to the basic seal kit ordering number.
   Example: BFSS-2-T
   BFSS-2-P-LT
3. The listed basic seal kit ordering numbers specify 316 stainless steel material.
   To order kits with other materials, such as Alloy 400 material, replace "SS" with "M" in the ordering number.
   Example: BFM-2-T

Locking Device

◎ Lock BF series 2-way or 3-way valves, locking hole diameter is 0.21 in (5.2 mm).
◎ To order a ball valve with locking device, add -**L** to the valve ordering number.
Example: BFSS-ML6-**L**/BFSS-ML6-3-**L**

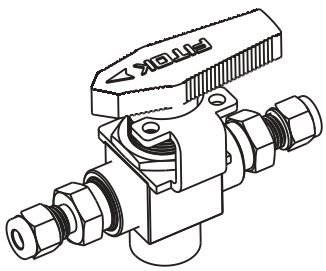

Ball Valve without Handle

◎ Ball Valve without handle can be directly connected to the FITOK actuator assembly.
◎ To order, please add -**AM** to the valve ordering number.
Example: BFSS-FL4-P-**AM**

Ordering Number Description

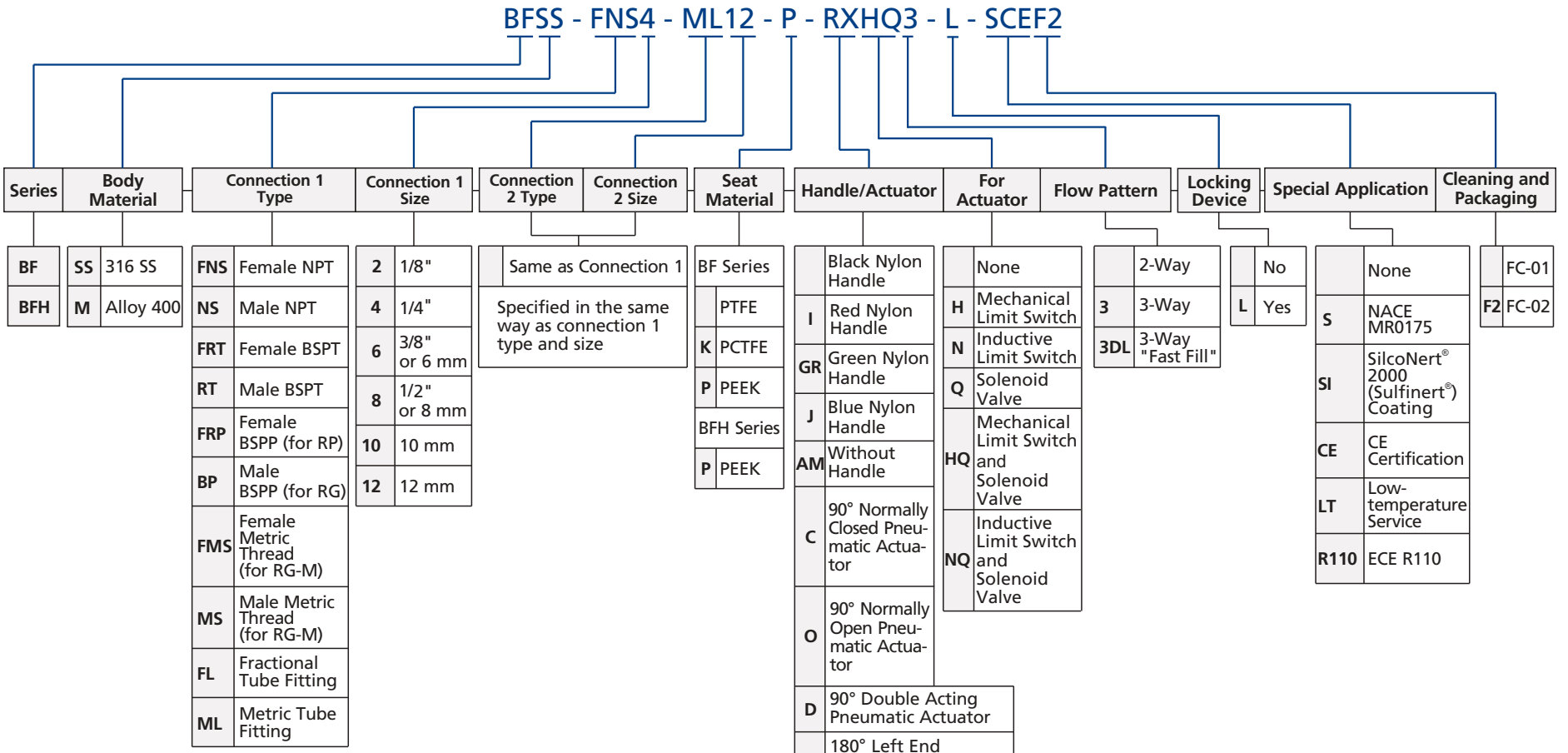

Note: "Ordering Number Description" is a reference to understand the combination rules of FITOK product part number. Not all combinations are available.

1. Cleaning and Packaging:
   FC-01: Standard cleaning and packaging for general industrial procedures.
   FC-02: Special cleaning and packaging for wetted system components to ensure compliance with product cleanliness requirement of ASTM G93 Level C.
2. For more information about pneumatically actuated ball valves, please refer to the catalog Actuated Ball Valves.
3. SilcoNert® 2000 (Sulfinert®) Coating: Except for ball valves with PEEK seat, wetted metal components SilcoNert® 2000 (Sulfinert®) coated.
4. CE certification is available. For more information, please contact FITOK group or our authorized distributors.
5. Certifications do not include attachments to the valve, such as actuators or a different handle mechanism.

3-Piece Ball Valves

BG Series

Features

- Working pressure up to: 1000 psig (69.0 bar)
- Working temperature: -20°F to 450°F (-28°C to 232°C)
- End connections:
  1/8 to 1 thread
  1/8" to 1" pipe butt or socket weld
  1/4" to 1" and 6 mm to 25 mm tube butt or socket weld
  1/4" to 1" and 6 mm to 25 mm tube fitting
- Orifice sizes: 0.19" (4.8 mm) to 1" (25 mm)
- Blowout proof stem
- Bidirectional flow
- Leak-tight performance testing with nitrogen or compressed air for every valve at the rated pressure to meet the requirement of no visible leak



Pressure vs. Temperature

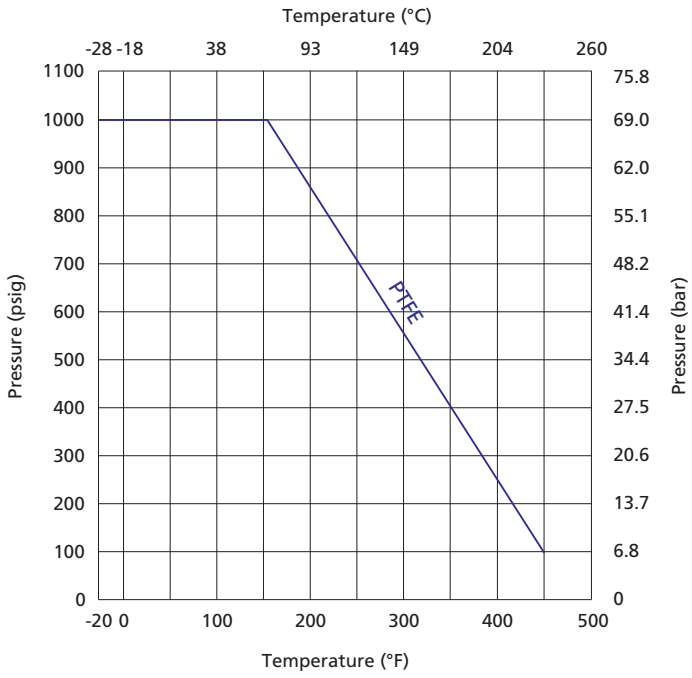

Note: The temperature and pressure rating are based on valves of standard materials.

Standard Materials of Construction

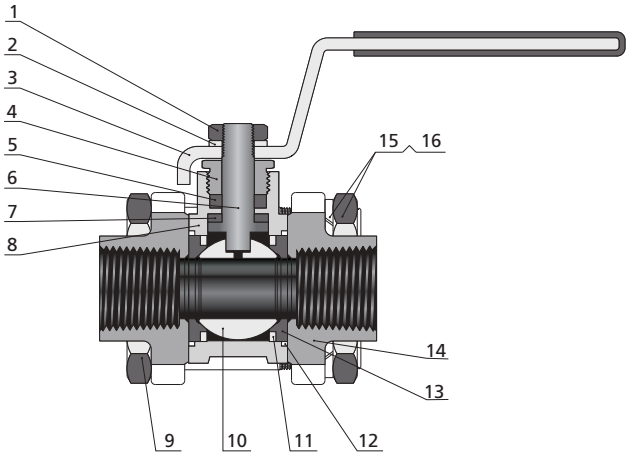

Item	Component	Valve Body Material	
		CF8M/ A351	CF8/ A351
1	Stem Nut	SS	
2	Gasket	SS	
3	Handle	304 SS/A240 (with vinyl sleeve)	
4	Gland	316 SS/A479 or 304 SS/A479	
5	*Stem Packing*	*PTFE/D1710*	
6	*Stem*	*316 SS/A479 or 304 SS/A479*	
7	*Stem Bearing*	*PTFE/D1710*	
8	*Body*	*CF8M/A351*	*CF8/A351*
9	Body Bolt	SS	
10	*Ball*	*316 SS/A479 or 304 SS/A479*	
11	*Support Ring*	*316 SS/A240 or 304 SS/A240*	
12	*Flange Seal*	*PTFE/D1710*	
13	*Seat*	*PTFE/D1710*	
14	*End Connection*	*CF8M/A351*	*CF8/A351*
15	Gasket	SS	
16	Nut	SS	
Lubricants		*Silicone-based and PTFE-based*	

Note: Wetted components are listed in italics.
For other materials, please contact FITOK Group or our authorized distributors.

Dimensions

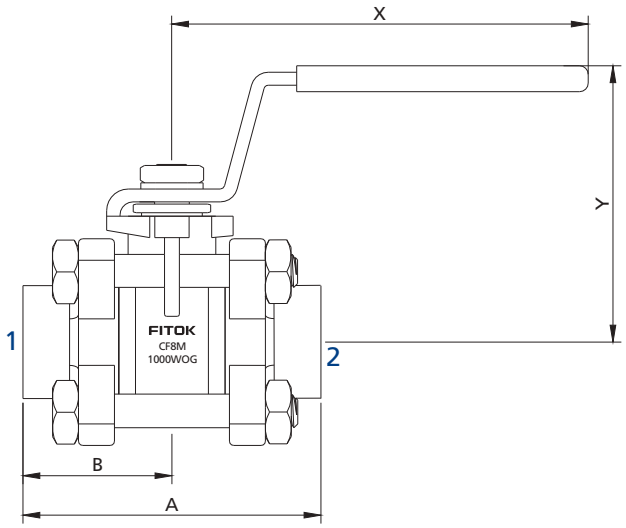

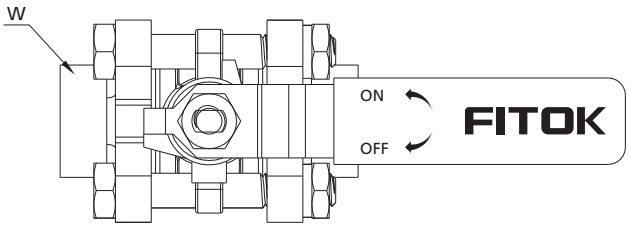

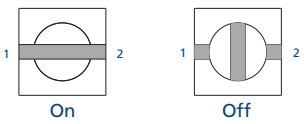

Basic Ordering Number	Connection Type and Size		Orifice in. (mm)	Cv	Dimensions, in. (mm)				
	Connection 1	Connection 2			A	B	W	X	Y
BG□□-FNS2-05	1/8 Female NPT	1/8 Female NPT	0.19 (4.8)	1.2	2.05 (52.1)	1.03 (26.0)	0.63 (16.0)	2.69 (68.3)	1.46 (37.0)
BG□□-FRP2-05	1/8 Female BSPP	1/8 Female BSPP							
BG□□-PB4-05	1/4×SCH80 Pipe Butt Weld	1/4×SCH80 Pipe Butt Weld							
BG□□-FL4-05	1/4" FITOK	1/4" FITOK			2.63 (66.8)	1.31 (33.4)			
BG□□-ML6-05	6 mm FITOK	6 mm FITOK							
BG□□-ML8-05	8 mm FITOK	8 mm FITOK							
BG□□-FNS4-07	1/4 Female NPT	1/4 Female NPT	0.28 (7.1)	3.8	2.05 (52.1)	1.03 (26.0)			
BG□□-FRP4-07	1/4 Female BSPP	1/4 Female BSPP							
BG□□-FL6-07	3/8" FITOK	3/8" FITOK			2.63 (66.8)	1.31 (33.4)			
BG□□-ML10-07	10 mm FITOK	10 mm FITOK							
BG□□-FL8-11	1/2" FITOK	1/2" FITOK	0.42 (10.6)	7.5	4.04 (103.0)	2.02 (51.3)	0.93 (23.5)	3.94 (100.0)	2.19 (55.7)
BG□□-ML12-11	12 mm FITOK	12 mm FITOK							
BG□□-ML14-11	14 mm FITOK	14 mm FITOK							
BG□□-FNS6-13	3/8 Female NPT	3/8 Female NPT	0.50 (12.7)	11.3	2.57 (65.2)	1.28 (32.6)			
BG□□-FRP6-13	3/8 Female BSPP	3/8 Female BSPP							
BG□□-PS6-13	3/8 PS	3/8 PS							
BG□□-PB8-13	1/2×SCH80 Pipe Butt Weld	1/2×SCH80 Pipe Butt Weld			2.96 (75.3)	1.48 (37.7)			
BG□□-FL10-13	5/8" FITOK	5/8" FITOK			4.04 (103.0)	2.02 (51.3)			
BG□□-ML16-13	16 mm FITOK	16 mm FITOK							
BG□□-FNS8-15	1/2 Female NPT	1/2 Female NPT	0.55 (14.0)	13.0	2.74 (69.5)	1.37 (34.8)	1.06 (27.0)		2.26 (57.5)
BG□□-FRP8-15	1/2 Female BSPP	1/2 Female BSPP							
BG□□-PS8-15	1/2 PS	1/2 PS							
BG□□-MTB22-15	22×3 mm Tube Butt Weld	22×3 mm Tube Butt Weld							
BG□□-TS12-15	3/4" TS	3/4" TS							
BG□□-MTS18-15	18 mm Tube Socket Weld	18 mm Tube Socket Weld							
BG□□-FL12-15	3/4" FITOK	3/4" FITOK			4.04 (103.0)	2.02 (51.3)			
BG□□-ML18-15	18 mm FITOK	18 mm FITOK							
BG□□-FNS12-20	3/4 Female NPT	3/4 Female NPT	0.79 (20.0)	50.0	3.15 (80.0)	1.57 (40.0)	1.34 (34.0)	5.18 (131.5)	2.66 (67.5)
BG□□-FRP12-20	3/4 Female BSPP	3/4 Female BSPP							

Basic Ordering Number	Connection Type and Size		Orifice in. (mm)	Cv	Dimensions, in. (mm)				
	Connection 1	Connection 2			A	B	W	X	Y
BG□□-PB12-20	3/4×SCH80 Pipe Butt Weld	3/4×SCH80 Pipe Butt Weld	0.79 (20.0)	50.0	3.15 (80.0)	1.57 (40.0)	1.34 (34.0)	5.18 (131.5)	2.66 (67.5)
BG□□-PS12-20	3/4 PS	3/4 PS							
BG□□-TS16-20	1" TS	1" TS							
BG□□-MTB25-20	25×3.5 mm Tube Butt Weld	25×3.5 mm Tube Butt Weld							
BG□□-MTS25-20	25 mm Tube Socket Weld	25 mm Tube Socket Weld							
BG□□-FL16-20	1" FITOK	1" FITOK			5.12 (130.0)	2.56 (65.0)			
BG□□-ML22-20	22 mm FITOK	22 mm FITOK							
BG□□-ML25-20	25 mm FITOK	25 mm FITOK							
BG□□-FNS16-25	1 Female NPT	1 Female NPT	0.98 (25.0)	93.0	3.54 (90.0)	1.77 (45.0)	1.57 (40.0)	5.95 (151.2)	3.08 (78.2)
BG□□-FRP16-25	1 Female BSPP	1 Female BSPP							
BG□□-PS16-25	1 PS	1 PS							
BG□□-PB16-25	1×SCH80 Pipe Butt Weld	1×SCH80 Pipe Butt Weld							

1. FITOK means FITOK double ferrule tube fittings, TS means fractional tube socket weld, MTS means metric tube socket weld, TB means fractional tube butt weld, MTB means metric tube butt weld, PS means pipe socket weld, and PB means pipe butt weld.
2. Butt welding ends are manually welded. For connections with orbital welding, please contact FITOK Group or our authorized distributors.
3. Sizes and types listed are standard. Other sizes and types are available upon request, please contact FITOK Group or our authorized distributors.
4. Dimensions are shown with tube fitting nuts finger-tightened. All dimensions are for reference only and are subject to change. For dimensions not shown above, please contact FITOK Group or our authorized distributors.

Seal Kits

Valve Orifice	Basic Seal Kit Ordering Number	Content
05/07	T-BG-2-RK	Seat, flange seal, lower packing, upper packing, instructions
11/13	T-BG-4-RK	
15	T-BG-6-RK	
20	T-BG-12-RK	
25	T-BG-16-RK	Seat, flange seal, stem bearing, packing support, lower packing, upper packing, instructions

Locking Device

- Lock BG series valves, locking hole diameters of: valves with orifice 05 or 07 are 0.185 in (4.7 mm); valves with orifice 11, 13, 15, or 20 are 0.22 in (5.7 mm); valves with orifice 25 are 0.19 in (4.8 mm)
- To order a ball valve with locking device, add -**L** to the valve ordering number.
  Example: BGSS-FRT8-15-**L**

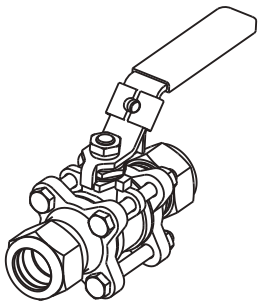

Diagram of Ball Valves with Locking Device and Orifice 05, 07, 11, 13, 15, or 20

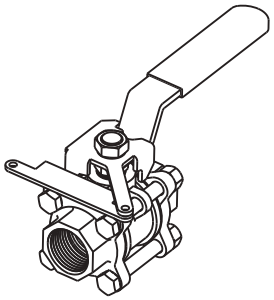

Diagram of Ball Valves with Locking Device and Orifice 25

Ordering Number Description

BGSS - FNS8 - ML18 - 15 - L - SF2

Series	Body Material	Connection 1 Type	Connection 1 Size	Connection 2 Type	Connection 2 Size	Orifice Size	Locking Device	Special Application	Cleaning and Packaging
BG	SS CF8M S4 CF8	FNS Female NPT NS Male NPT FRT Female BSPT RT Male BSPT FRP Female BSPP (for RP) BP Male BSPP (for RG) FMS Female Metric Thread (for RG-M) MS Male Metric Thread (for RG-M) MTS Metric Tube Socket TS Fractional Tube Socket MTB Metric Tube Butt Weld TB Fractional Tube Butt Weld PS Pipe Socket Weld PB Pipe Butt Weld FL Fractional Tube Fitting ML Metric Tube Fitting UFB Rotatable Fractional Tube Butt Weld UMB Rotatable Metric Tube Butt Weld UPB Rotatable Pipe Butt Weld	2 1/8" 4 1/4" or 1/4×SCH80 5 5/16" 6 3/8" or 6 mm 8 1/2" or 8 mm or 1/2×SCH80 10 5/8" or 10 mm 12 3/4" or 12 mm or 3/4×SCH80 14 14 mm or M14 x 1.5 16 1" or 16 mm or 1"×SCH80 18 18 mm 20 1 1/4" or 20 mm or M20 x 1.5 22 22 mm or 22×3 mm or M22×1.5 24 1 1/2" or M24 x 1.5 25 25 mm or 25×3.5 mm	Same as Connection 1 Specified in the same way as connection 1 type and size		05 0.19" (4.8 mm) 07 0.28" (7.1 mm) 11 0.42" (10.6 mm) 13 0.50" (12.7 mm) 15 0.55" (14.0 mm) 20 0.79" (20 mm) 25 0.98" (25 mm)	No L Yes	None S NACE MR0175 SI SilcoNert® 2000 (Sulfinert®) Coating	FC-01 F2 FC-02

Note: "Ordering Number Description" is a reference to understand the combination rules of FITOK product part number. Not all combinations are available.

1.Standard thread pitch for metric threads are as follows:
M10 and below: 1 mm
M12 to M24: 1.5 mm
Standard thread pitch should be omitted in the ordering number, others should be specified.
2. If you need a port with orbital welding, please contact FITOK Group.
3. For oxygen-enriched environment or hazardous media service, contact FITOK Group or our authorized distributors.
4. Cleaning and Packaging:
FC-01: Standard cleaning and packaging for general industrial procedures.
FC-02: Special cleaning and packaging for wetted system components to ensure compliance with product cleaning requirement of ASTM G93 Level C.
5. SilcoNert® 2000 (Sulfinert®) Coating: Wetted metal components SilcoNert® 2000 (Sulfinert®) coated.

3-Piece Ball Valves

BH Series

Features

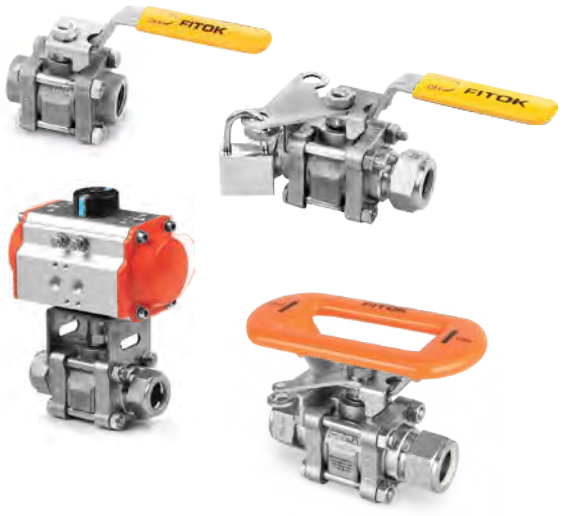

- Working pressure up to: 3000 psig (207 bar)
- Working temperature: -20°F to 450°F (-28°C to 232°C)
- End connections:
  1/8 to 2 thread
  1/8" to 2" pipe butt or socket weld
  1/4" to 2" and 6 mm to 50 mm tube butt or socket weld
  1/4" to 2" and 6 mm to 38 mm tube fitting
- 3-piece precision cast body construction
- Orifize sizes: 0.19"(4.8 mm) to 1.5" (38.1 mm)
- Blowout proof stem
- Pneumatic and electric actuator available
- Bidirectional flow for 2-way valves
- Bottom port as inlet for 3-way valves
- Leak-tight performance testing with nitrogen or compressed air for every valve at the rated pressure to meet the requirement of no visible leak

Pressure vs. Temperature

2-way Valves

Orifize Size: 0.19", 0.28", 0.41", 0.52" & 0.88"

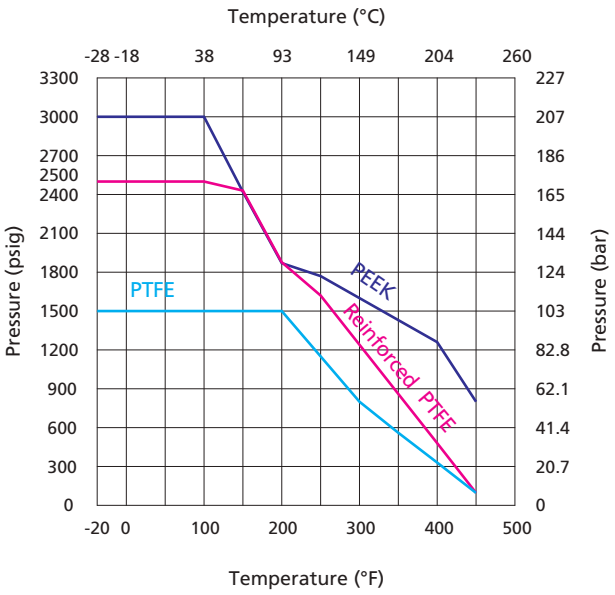

Orifize Size: 1.13", 1.25" & 1.50"

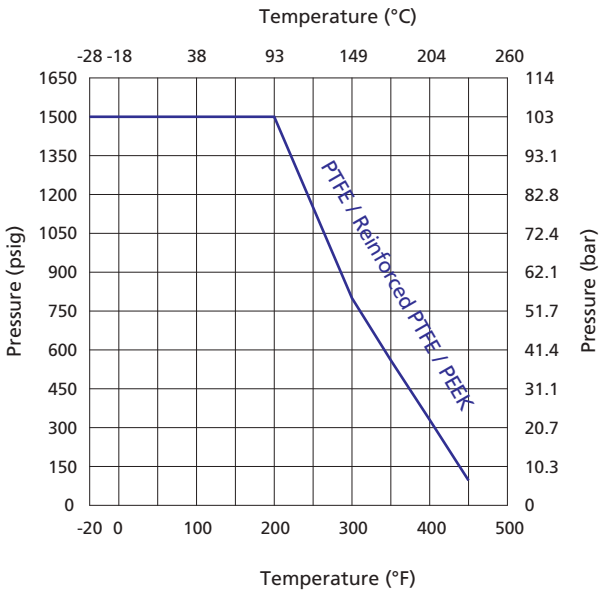

3-way Valves

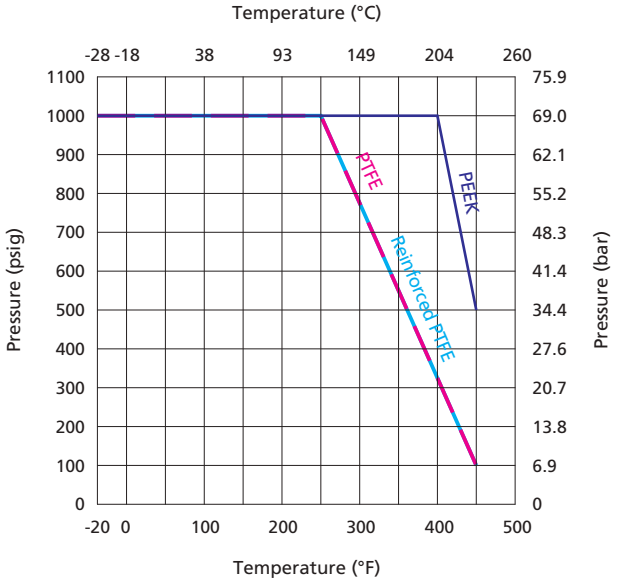

Note: The temperature and pressure rating are based on valves of standard materials.

Standard Materials of Construction

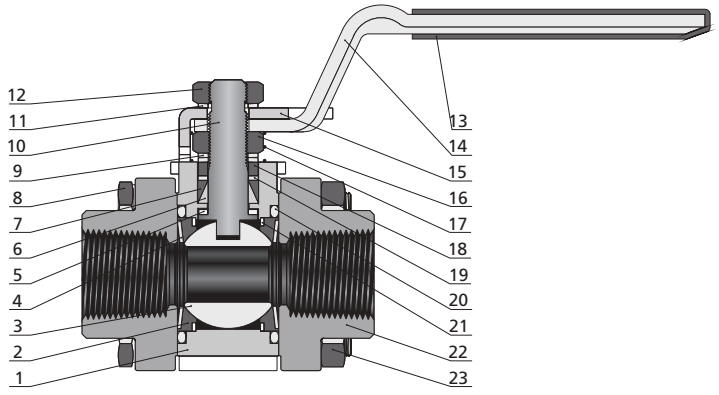

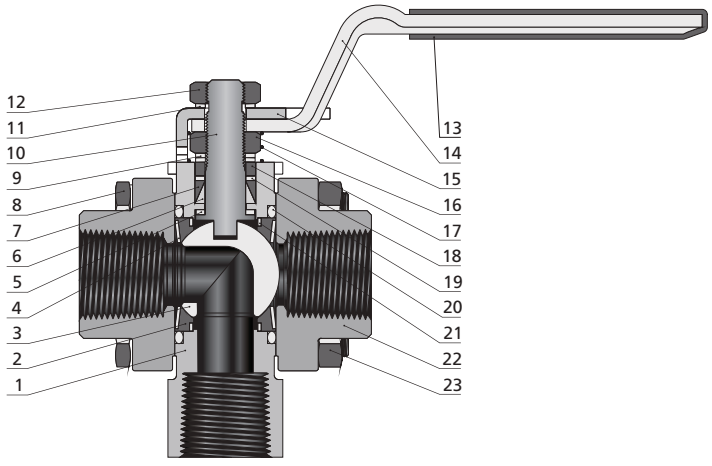

Item	Component	Material Grade/ASME Specification	
1	*Body*	*CF8M/A351*	*CF8/A351*
2	*Seat*	*PTFE or Reinforced PTFE or PEEK*	
3	*Ball*	*316 SS/A479*	
4	*Coned-disc Spring*	*Strain-hardened 316 SS/A240*	
5	*Stem Bearing*	*PEEK*	
6	*Lower Packing*	*Reinforced PTFE*	
7	*Upper Packing*	*Reinforced PTFE*	
8	Body Bolt	Gr. B8M/A193	
9	Stem Spring	Strain-hardened 316 SS/A240	
10	*Stem*	*316 SS/A479*	
11	Stem Spring	Strain-hardened 316 SS/A240	
12	Stem Nut	Gr. 8M/A194	
13	Handle Sleeve	Vinyl	
14	Handle	304 SS/A240	
15	Stop Plate	304 SS/A240	
16	Stem Nut	Gr. 8M/A194	
17	Grounding Spring	302 SS/A313	
18	Gland	PTFE-coated 316 SS/A479	
19	*Packing Support*	*PEEK*	
20	*Flange Seal*	*PTFE/D1710*	
21	*Support Ring*	*316 SS/A240*	
22	*End Connection*	*CF8M/A351*	*CF8/A351*
23	Body Nut	Gr.8M/A194	
	Lubricants	*Silicone-based and PTFE-based*	

Note: Wetted components are listed in italics.
For other materials, please contact FITOK Group or our authorized distributors.

Dimensions

2-way Valves

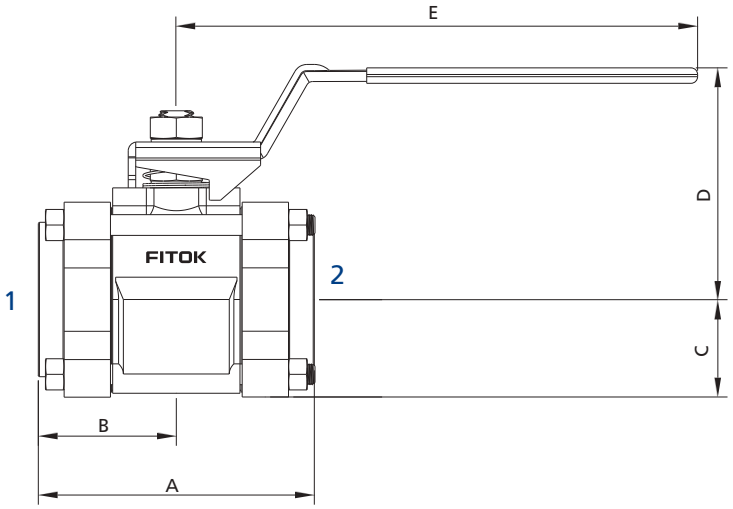

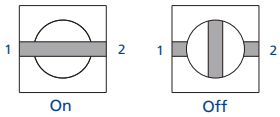

3-way Valves

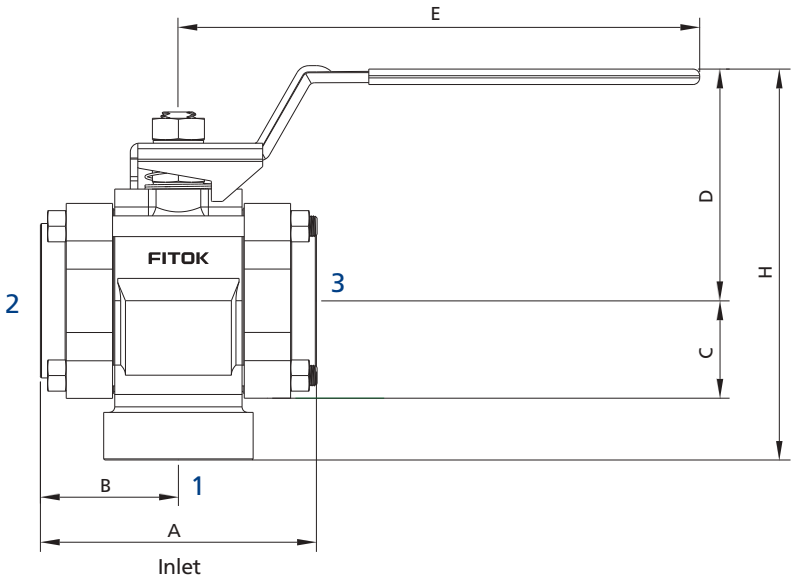

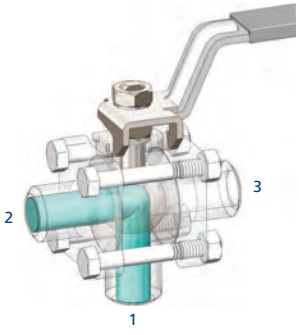

Port 1 to port 2

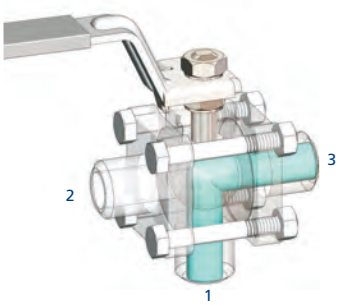

Port 1 to port 3

Basic Ordering Number		Connection Type and Size		Orifice in. (mm)		Cv		Dimensions, in. (mm)					
2-way	3-way	Connection 1	Connection 2/3	2-way	3-way	2-way	3-way	A	B	C	D	E	H
BH□□-FL4-05	BH□□-FL4-05-3	1/4" FITOK	1/4" FITOK	0.19 (4.8)	0.19 (4.8)	1.2	1.2	3.17 (80.5)	1.59 (40.4)	0.68 (17.3)	1.66 (42.2)	2.37 (60.2)	3.35 (85.1)
BH□□-ML6-05	BH□□-ML6-05-3	6 mm FITOK	6 mm FITOK										
BH□□-ML8-05	BH□□-ML8-05-3	8 mm FITOK	8 mm FITOK			2.5							
BH□□-TS4-05	—	1/4" TS	1/4" TS		—	1.2	—	2.16 (54.9)	1.08 (27.4)				—
BH□□-MTS6-05	—	6 mm Tube Socket Weld	6 mm Tube Socket Weld										
BH□□-PB4-05	—	1/4×SCH80 Pipe Butt Weld	1/4×SCH80 Pipe Butt Weld					2.08 (52.8)	1.04 (26.4)				
BH□□-FNS2-07	BH□□-FNS2-07-3	1/8 Female NPT	1/8 Female NPT	0.28 (7.1)	0.28 (7.1)	3.8	1.7	2.16 (54.9)	1.08 (27.4)	0.68 (17.3)	1.66 (42.2)	2.37 (60.2)	3.12 (79.2)
BH□□-FRT2-07	BH□□-FRT2-07-3	1/8 Female BSPT	1/8 Female BSPT										
BH□□-FRP2-07	BH□□-FRP2-07-3	1/8 Female BSPP	1/8 Female BSPP										
BH□□-FNS4-07	BH□□-FNS4-07-3	1/4 Female NPT	1/4 Female NPT										
BH□□-FRT4-07	BH□□-FRT4-07-3	1/4 Female BSPT	1/4 Female BSPT										
BH□□-FRP4-07	BH□□-FRP4-07-3	1/4 Female BSPP	1/4 Female BSPP										
BH□□-FL6-07	BH□□-FL6-07-3	3/8" FITOK	3/8" FITOK					3.17 (80.5)	1.59 (40.4)				4.37 (111)
BH□□-ML10-07	BH□□-ML10-07-3	10 mm FITOK	10 mm FITOK					3.20 (81.3)	1.60 (40.6)				
BH□□-TS6-07	—	3/8" TS	3/8" TS		—		—	2.16 (54.9)	1.08 (27.4)				—
BH□□-PB6-07	—	3/8×SCH80 Pipe Butt Weld	3/8×SCH80 Pipe Butt Weld					2.08 (52.8)	1.04 (26.4)				
BH□□-FL8-10	BH□□-FL8-10-3	1/2" FITOK	1/2" FITOK	0.41 (10.4)	0.41 (10.4)	7.5	3.5	4.04 (103)	2.02 (51.3)	0.89 (22.6)	2.35 (59.7)	4.50 (114)	4.48 (114)
BH□□-ML12-10	BH□□-ML12-10-3	12 mm FITOK	12 mm FITOK		0.37 (9.5)		2.5						
BH□□-TS8-10	—	1/2" TS	1/2" TS		—		—	2.70 (68.6)	1.34 (34)				—
BH□□-FNS6-13	BH□□-FNS6-13-3	3/8 Female NPT	3/8 Female NPT	0.52 (13.1)	0.52 (13.1)	12.0	5.0	2.70 (68.6)	1.35 (34.3)	0.89 (22.6)	2.35 (59.7)	4.50 (114)	4.19 (106)
BH□□-FRT6-13	BH□□-FRT6-13-3	3/8 Female BSPT	3/8 Female BSPT										
BH□□-FRP6-13	BH□□-FRP6-13-3	3/8 Female BSPP	3/8 Female BSPP										
BH□□-FNS8-13	BH□□-FNS8-13-3	1/2 Female NPT	1/2 Female NPT										
BH□□-FRT8-13	BH□□-FRT8-13-3	1/2 Female BSPT	1/2 Female BSPT										
BH□□-FRP8-13	BH□□-FRP8-13-3	1/2 Female BSPP	1/2 Female BSPP										
BH□□-FL12-13	BH□□-FL12-13-3	3/4" FITOK	3/4" FITOK			13.6		4.04 (103)	2.02 (51.3)				4.48 (114)
BH□□-ML16-13	BH□□-ML16-13-3	16 mm FITOK	16 mm FITOK										
BH□□-ML18-13	BH□□-ML18-13-3	18 mm FITOK	18 mm FITOK										
BH□□-TS12-13	—	3/4" TS	3/4" TS		—		—	2.70 (68.6)	1.34 (34)				—
BH□□-PS8-13	—	1/2 PS	1/2 PS			15.0							
BH□□-PB8-13	—	1/2×SCH80 Pipe Butt Weld	1/2×SCH80 Pipe Butt Weld			6.8		2.69 (68.3)	1.34 (34)				
BH□□-PB12-13	—	3/4×SCH80 Pipe Butt Weld	3/4×SCH80 Pipe Butt Weld			13.6							
BH□□-FNS12-22	BH□□-FNS12-22-3	3/4 Female NPT	3/4 Female NPT	0.88 (22.2)	0.71 (18.0)	31.0	12.0	3.59 (91.2)	1.8 (45.7)	1.25 (31.8)	2.94 (74.7)	6.00 (152)	5.45 (138)
BH□□-FRT12-22	BH□□-FRT12-22-3	3/4 Female BSPT	3/4 Female BSPT										

Basic Ordering Number		Connection Type and Size		Orifice in.(mm)		Cv		Dimensions, in. (mm)					
2-way	3-way	Connection 1	Connection 2/3	2-way	3-way	2-way	3-way	A	B	C	D	E	H
BH□□-FRP12-22	BH□□-FRP12-22-3	3/4 Female BSPP	3/4 Female BSPP	0.88 (22.2)	0.71 (18.0)	31.0	12.0	3.59 (91.2)	1.8 (45.7)	1.25 (31.8)	2.94 (74.7)	6.00 (152)	5.45 (138)
BH□□-FNS16-22	BH□□-FNS16-22-3	1 Female NPT	1 Female NPT			38.0							
BH□□-FRT16-22	BH□□-FRT16-22-3	1 Female BSPT	1 Female BSPT					4.45 (113)	2.23 (56.6)				
BH□□-FRP16-22	BH□□-FRP16-22-3	1 Female BSPP	1 Female BSPP										
BH□□-FL16-22	BH□□-FL16-22-3	1" FITOK	1" FITOK			40.0		5.36 (136)	2.68 (68)				5.91 (150)
BH□□-FL20-22	BH□□-FL20-22-3	1 1/4" FITOK	1 1/4" FITOK					6.34 (161)	3.17 (80.5)				
BH□□-ML25-22	BH□□-ML25-22-3	25 mm FITOK	25 mm FITOK					5.36 (136)	2.68 (68)				
BH□□-ML28-22	BH□□-ML28-22-3	28 mm FITOK	28 mm FITOK					6.14 (156)	3.07 (78)				
BH□□-TS16-22	—	1" TS	1" TS		—		—	3.59 (91.2)	1.80 (45.7)				—
BH□□-MTS25-22	—	25 mm Tube Socket Weld	25 mm Tube Socket Weld			38.0		3.59 (91.2)	1.80 (45.7)				
BH□□-PS12-22	—	3/4 PS	3/4 PS			36.0							
BH□□-PS16-22	—	1 PS	1 PS			42.0							
BH□□-PB16-22	—	1×SCH80 Pipe Butt Weld	1×SCH80 Pipe Butt Weld			40.0		3.46 (87.9)	1.73 (43.9)	1.25 (31.8)			
BH□□-TS20-29	—	1 1/4" TS	1 1/4" TS	1.13 (28.6)		80.0		4.39 (112)	2.19 (55.6)	1.53 (38.9)	4.03 (102)	9.14 (232)	—
BH□□-PB20-32	—	1 1/4×SCH80 Pipe Butt Weld	1 1/4×SCH80 Pipe Butt Weld			90.0		4.57 (116)	2.28 (57.9)				
BH□□-FNS20-32	BH□□-FNS20-32-3	1 1/4 Female NPT	1 1/4 Female NPT	1.25 (31.8)	0.87 (22.0)		18.0	4.39 (112)	2.19 (55.6)	1.53 (38.9)	4.03 (102)	9.14 (232)	6.86 (174)
BH□□-FNS24-32	BH□□-FNS24-32-3	1 1/2 Female NPT	1 1/2 Female NPT			100.0							
BH□□-TS24-32	—	1 1/2" TS	1 1/2" TS		—		—						—
BH□□-PS20-32	—	1 1/4 PS	1 1/4 PS			90.0		4.51 (115)	2.25 (57.2)				
BH□□-PS24-32	—	1 1/2 PS	1 1/2 PS			100.0		4.57 (116)	2.28 (57.9)				
BH□□-PB24-32	—	1 1/2×SCH80 Pipe Butt Weld	1 1/2×SCH80 Pipe Butt Weld										
BH□□-FNS32-38	BH□□-FNS32-38-3	2 Female NPT	2 Female NPT	1.50 (38.1)	0.98 (25.0)	130.0	23.0	4.94 (125)	2.47 (62.5)	1.74 (44.2)	4.16 (106)	9.14 (232)	7.21 (183)
BH□□-FRT32-38	BH□□-FRT32-38-3	2 Female BSPT	2 Female BSPT										
BH□□-TS32-38	—	2" TS	2" TS		—		—						—
BH□□-PS32-38	—	2 PS	2 PS										
BH□□-PB32-38	—	2×SCH80 Pipe Butt Weld	2×SCH80 Pipe Butt Weld					6.14 (156)	3.12 (78)				

1. FITOK means FITOK double ferrule tube fittings, TS means fractional tube socket weld, MTS means metric tube socket weld, TB means fractional tube butt weld, MTB means metric tube butt weld, PS means pipe socket weld, and PB means pipe butt weld.
2. Sizes and types listed are standard. Other sizes and types are available upon request, please contact FITOK Group or our authorized distributors.
3. Dimensions are shown with tube fitting nuts finger-tightened. All dimensions are for reference only and are subject to change. For dimensions not shown above, please contact FITOK Group or our authorized distributors.

Ball Valves for Special Applications



Fire safe applications

API 607 and ISO 15848-1 certified.
Patented stem packing design and seat design.
Working temperature: -40°F to 400°F (-40°C to 204°C).
Working pressure up to: 1500 psig (103 bar).
Orifice size: 0.19" (4.8 mm) to 1.25" (31.8 mm).
Helium leak rate/stem diameter $\leqslant 1.78\times10^{-6}$ std cm^3/s.
To order a fire safe valve, add -**IE** to the valve ordering number.
For example: BHSS-FL16-22-**IE**
To order a FDA-compliant fire safe valve, add -**FDA-IE** to the valve ordering number.
For example: BHSS-FL16-22-**FDA-IE**

Structure Features

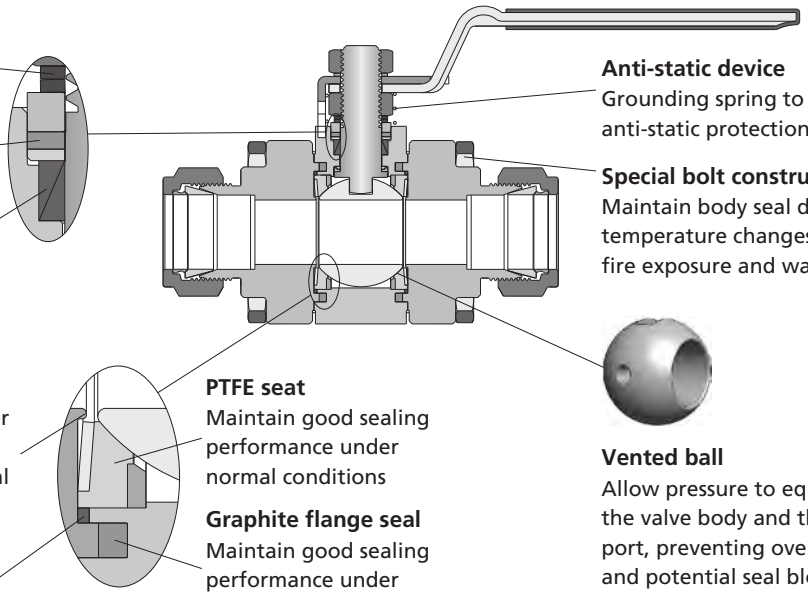

Live-loaded disc spring
Elastic compensation effect

Graphite stem packing
Maintain good sealing performance under fire conditions

PTFE stem packing
Maintain good sealing performance under normal conditions

Metal seal design
Reduce the risk of leakage under fire conditions by reducing the active gap between the spherical surface and the sealing surface

PTFE flange seal
Maintain good sealing performance under normal conditions

Anti-static device
Grounding spring to provide anti-static protection

Special bolt construction
Maintain body seal during rapid temperature changes resulting from fire exposure and water quenching

PTFE seat
Maintain good sealing performance under normal conditions

Graphite flange seal
Maintain good sealing performance under fire conditions

Vented ball
Allow pressure to equalize between the valve body and the upstream port, preventing overpressurization and potential seal blowout under fire conditions

Pressure vs. Temperature

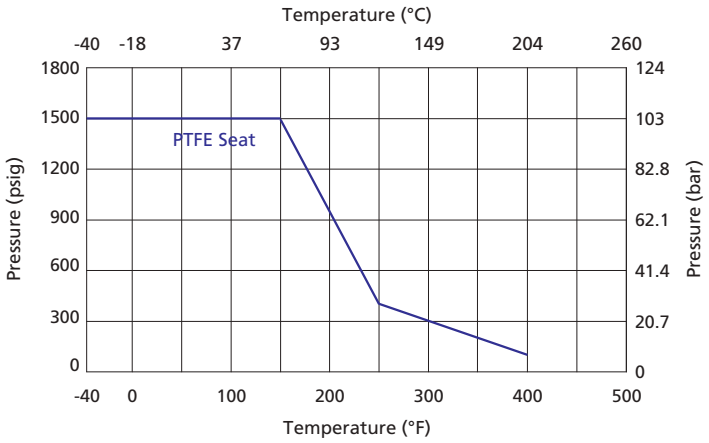

Standard Materials of Construction

Component	Material/ ASME Specification
Disc Spring	*Alloy X-750/AMS 5542*
Flange Seal	Graphite
Stem Packing	Graphite
Packing Support	*316 SS/A479*
Stem Lower Bearing	*316 SS/A479*
Stem Upper Bearing	*PEEK*
Body Bolt	SS

Notes: Wetted components are listed in italics. Other components not listed are in the same material as components of general service ball valves. For other materials, please contact FITOK Group or our authorized distributors.

Seal Kits

Valve Orifice	Flow Pattern	Basic Seal Kit Ordering Number	Content
05/07	2-way	BHSS-□4-RK	Seat, coned-disc spring, stem bearing, lower packing, upper packing, stem spring, gland, packing support, flange seal, instructions
	3-way		
10/13	2-way	BHSS-□8-RK	
	3-way		
22	2-way	BHSS-□16-RK	
	3-way		
29/32	2-way	BHSS-□24-RK	
	3-way		
38	2-way	BHSS-□32-RK	
	3-way		

Seat Material	Designator
PTFE	-
Reinforced PTFE	R
PEEK	P

1. Seal kit components are the same materials and grades listed in materials of construction.
2. The default seat material in the seal kit for BH series valves is PTFE. To order seats with other materials, add a seat material designator to "□" in the basic seal kit ordering number to get a complete ordering number.
   Example: BHSS-8-RK
   BHSS-P8-RK
3. The listed basic seal kit ordering numbers specify CF8M material. To order kits with other materials, such as CF8, replace "SS" with "S4" in the ordering number.
   Example: BHS4-8-RK

Locking Device

◎ Lock BH series 2-way or 3-way valves, locking hole diameters of the whole series of valves are 0.20 in (5.0 mm).

◎ To order a ball valve with locking device, add -**L** to the valve ordering number.
Example: BHSS-FL16-22-**L**/BHSS-FL16-22-3**L**

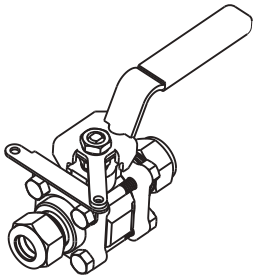

Ball Valve without Handle

◎ Ball Valve without handle can be directly connected to the FITOK actuator assembly.

◎ To order, please add -**AM** to the valve ordering number.
Example: BHSS-FL4-P05-**AM**

Ordering Number Description

BHS4 - FNS8 - FRT8 - FL8 - P13G - OHQ3L - SCEF2

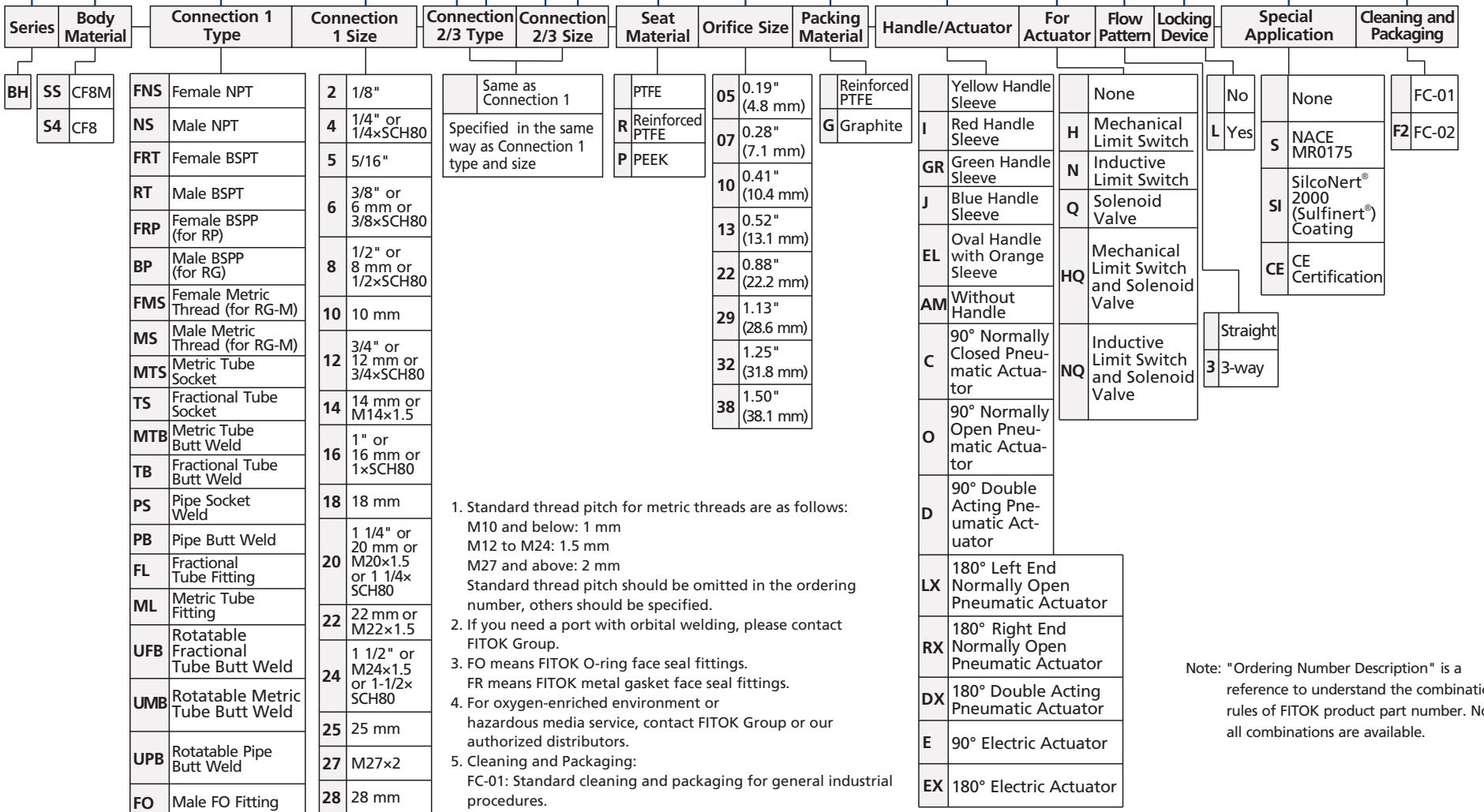

Series	Body Material
BH	SS CF8M
	S4 CF8

Connection 1 Type	
FNS	Female NPT
NS	Male NPT
FRT	Female BSPT
RT	Male BSPT
FRP	Female BSPP (for RP)
BP	Male BSPP (for RG)
FMS	Female Metric Thread (for RG-M)
MS	Male Metric Thread (for RG-M)
MTS	Metric Tube Socket
TS	Fractional Tube Socket
MTB	Metric Tube Butt Weld
TB	Fractional Tube Butt Weld
PS	Pipe Socket Weld
PB	Pipe Butt Weld
FL	Fractional Tube Fitting
ML	Metric Tube Fitting
UFB	Rotatable Fractional Tube Butt Weld
UMB	Rotatable Metric Tube Butt Weld
UPB	Rotatable Pipe Butt Weld
FO	Male FO Fitting
FR	Male FR Fitting

Connection 1 Size	
2	1/8"
4	1/4" or 1/4×SCH80
5	5/16"
6	3/8" or 6 mm or 3/8×SCH80
8	1/2" or 8 mm or 1/2×SCH80
10	10 mm
12	3/4" or 12 mm or 3/4×SCH80
14	14 mm or M14×1.5
16	1" or 16 mm or 1×SCH80
18	18 mm
20	1 1/4" or 20 mm or M20×1.5 or 1 1/4× SCH80
22	22 mm or M22×1.5
24	1 1/2" or M24×1.5 or 1-1/2× SCH80
25	25 mm
27	M27×2
28	28 mm
32	2" or 2×SCH80

Connection 2/3 Type / Connection 2/3 Size
Same as Connection 1
Specified in the same way as Connection 1 type and size

Seat Material	
	PTFE
R	Reinforced PTFE
P	PEEK

Orifice Size	
05	0.19" (4.8 mm)
07	0.28" (7.1 mm)
10	0.41" (10.4 mm)
13	0.52" (13.1 mm)
22	0.88" (22.2 mm)
29	1.13" (28.6 mm)
32	1.25" (31.8 mm)
38	1.50" (38.1 mm)

Packing Material	
	Reinforced PTFE
G	Graphite

Handle/Actuator	
	Yellow Handle Sleeve
I	Red Handle Sleeve
GR	Green Handle Sleeve
J	Blue Handle Sleeve
EL	Oval Handle with Orange Sleeve
AM	Without Handle
C	90° Normally Closed Pneumatic Actuator
O	90° Normally Open Pneumatic Actuator
D	90° Double Acting Pneumatic Actuator
LX	180° Left End Normally Open Pneumatic Actuator
RX	180° Right End Normally Open Pneumatic Actuator
DX	180° Double Acting Pneumatic Actuator
E	90° Electric Actuator
EX	180° Electric Actuator

For Actuator	
	None
H	Mechanical Limit Switch
N	Inductive Limit Switch
Q	Solenoid Valve
HQ	Mechanical Limit Switch and Solenoid Valve
NQ	Inductive Limit Switch and Solenoid Valve

Flow Pattern	
	Straight
3	3-way

Locking Device	
	No
L	Yes

Special Application	
	None
S	NACE MR0175
SI	SilcoNert® 2000 (Sulfinert®) Coating
CE	CE Certification

Cleaning and Packaging	
	FC-01
F2	FC-02

1. Standard thread pitch for metric threads are as follows:
   M10 and below: 1 mm
   M12 to M24: 1.5 mm
   M27 and above: 2 mm
   Standard thread pitch should be omitted in the ordering number, others should be specified.
2. If you need a port with orbital welding, please contact FITOK Group.
3. FO means FITOK O-ring face seal fittings.
   FR means FITOK metal gasket face seal fittings.
4. For oxygen-enriched environment or hazardous media service, contact FITOK Group or our authorized distributors.
5. Cleaning and Packaging:
   FC-01: Standard cleaning and packaging for general industrial procedures.
   FC-02: Special cleaning and packaging for wetted system components to ensure compliance with product cleanliness requirements of ASTM G93 Level C.
6. For more information about pneumatic actuator ball valves, please refer to the catalog Actuated Ball Valves.
7. SilcoNert® 2000 (Sulfinert®) Coating: Except for ball valves with PEEK seat, wetted metal components SilcoNert® 2000 (Sulfinert®) coated.
8. CE certification is available. For more information, please contact FITOK group or our authorized distributors

Note: "Ordering Number Description" is a reference to understand the combination rules of FITOK product part number. Not all combinations are available.

One-Piece Instrumentation Ball Valves

BO Series

Features



- Working pressure up to: 3000 psig (207 bar)
- Working temperature: -65°F to 300°F (-54°C to 148°C)
- End connections:
  1/4 to 1/2 thread
  1/16" to 3/4" and 3 mm to 18 mm tube fitting
- 2-, 3-, 4-, 5-, 6- and 7-way models for on-off, switching and crossover service available
- One-piece body and one-piece ball stem
- No dead space
- Top-loaded design to allow adjustment with the valve in-line
- Thermal cycle performance improved and wear compensated by live-loaded design
- Any reasonable connections available
- Pneumatic and electric actuator available
- Handle color options available
- Full operating pressure at any port
- Leak-tight performance testing with nitrogen or compressed air for every valve at the rated pressure to meet the requirement of no visible leak
- The inlet can be any port except for valves with vent ports

Notes:
1. To prevent seat leakage, packing adjustment may be required periodically during the service life of the valve.
2. A higher initial actuation torque may happen to the valves that have not been actuated for a period of time.
3. Before installation, instrumentation ball valves exposed to dynamic temperature conditions may lose their initial packing load. Stem packing adjustment should be required.

Standard Materials of Construction

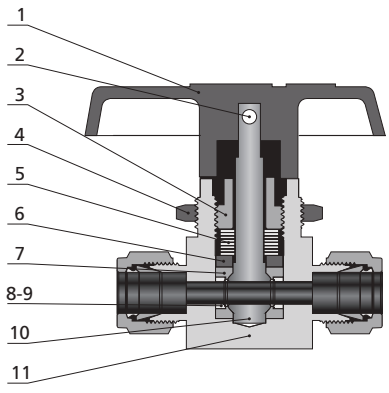

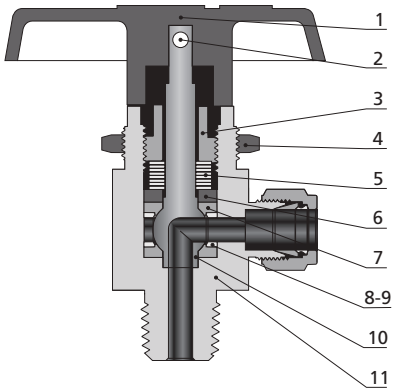

Item	Component	Valve Body Material		
		316 SS	Brass	Alloy 400
		Material Grade/ASTM Specification		
1	Handle	Nylon or Aluminium		
2	Set Screw	Zinc-plated carbon steel		
3	Packing Bolt	316 SS/A*479*	Brass C36000/B16	316 SS/A479
4	Panel Nut	316 SS/A*479*	Brass C36000/B16	316 SS/A*479*
5	Disc Spring	S17700/A693		
6	Gland	316 SS/A*479*	316 SS/A479	316 SS/A479
7	*Packing Seat*	*PTFE/D1710 or UHMWPE/D4020 or PFA/D3307*		
8	*Support Ring*	*316 SS/A479*	316 SS/A479	*Alloy 400/B164*
9	*Support Disc*			
10	*Ball Stem*	*316 SS/A479*	*Brass C36000/B16*	*Alloy 400/B164*
11	*Body*	*316 SS/A182*	*Brass C37700/B283*	*Alloy 400/B164*
Wetted Lubricant		*Fluorinated-based and silicone-based*		
Non-wetted Lubricant		Molybdenum disulfide with hydrocarbon binder coat		

Note: Wetted components are listed in italics.
For other materials, please contact FITOK Group or our authorized distributors.

On-Off (2-way) Valves

Standard Flow Path

Straight Pattern

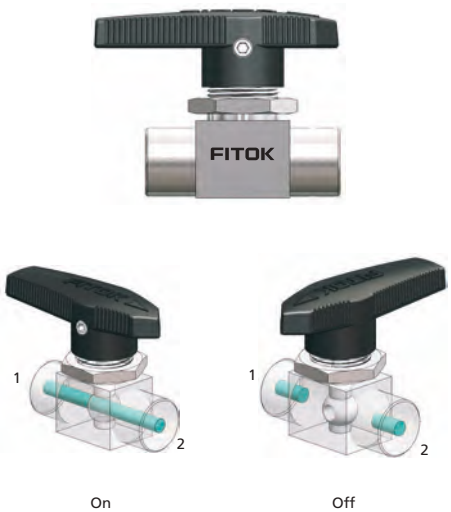

On Off

Angle Pattern



On Off

Pressure vs. Temperature

Straight Pattern and Angle Pattern

PTFE Packing Seat

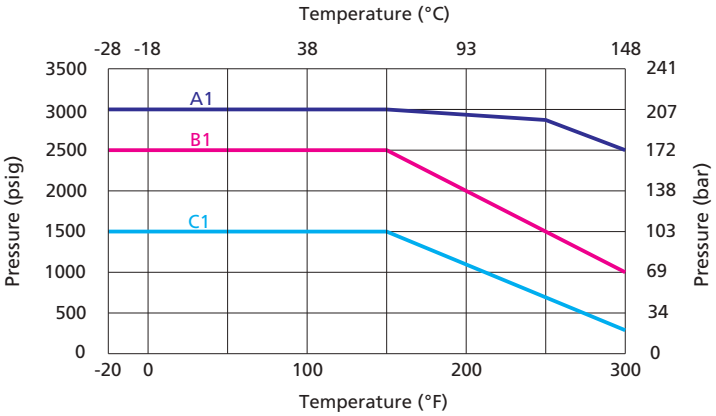

A1: Straight Pattern Valves (orifice 0.19")

B1: Straight Pattern Valves (orifice 0.05"& 0.06"& 0.09"& 0.13"& 0.28"& 0.41")
Angle Pattern Valves (orifice 0.05"& 0.06"& 0.09"& 0.13" &0.19")

C1: Angle Pattern Valves (orifice 0.28" & 0.41")

PFA, UHMWPE Packing Seat

The working temperature of UHMWPE packing seat should not be higher than 150°F (65°C).

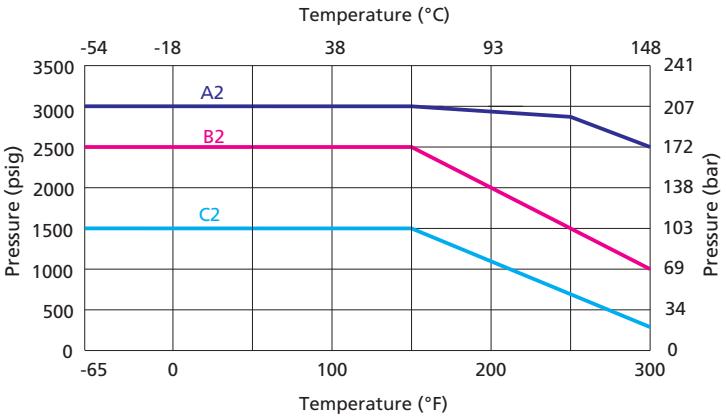

A2: Straight Pattern Valves (orifice 0.19")

B2: Straight Pattern Valves (orifice 0.05"& 0.06"& 0.09"& 0.13" &0.28"& 0.41")
Angle Pattern Valves (orifice 0.05"& 0.06"& 0.09"& 0.13" &0.19")

C2: Angle Valves (orifice 0.28" & 0.41")

Dimensions

Straight Pattern

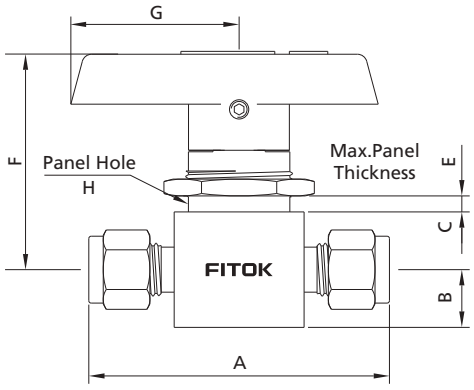

Angle Pattern

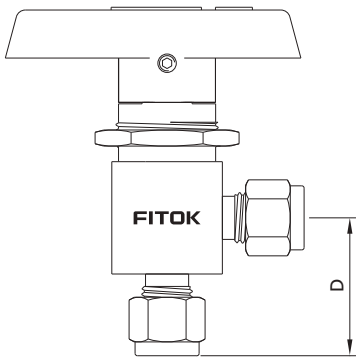

Basic Ordering Number	Connection Type and Size	Orifice in. (mm)	Cv		Dimensions, in. (mm)							
			Straight	Angle	A	B	C	D	E	F	G	H
BO□□-FL1-00	1/16" FITOK	0.05 (1.3)	0.10	——	1.68 (42.7)	0.28 (7.1)	0.34 (8.6)	——	0.25 (6.4)	1.43 (36.2)	1.10 (28)	19/32 (15.1)
BO□□-FL2-02	1/8" FITOK	0.09 (2.4)	0.20	0.15	2.01 (51.1)			0.97 (24.6)				
BO□□-FL4-03	1/4" FITOK	0.13 (3.2)	0.60	0.35	2.21 (56.1)			1.07 (27.2)				
BO□□-FL4-05		0.19 (4.8)	1.40	0.90	2.39 (60.7)	0.38 (9.7)	0.44 (11.2)	1.17 (29.7)	0.19 (4.8)	1.64 (41.7)	1.57 (39.9)	25/32 (19.8)
BO□□-FL6-05	3/8" FITOK		1.50		2.58 (65.5)			1.29 (32.8)				
BO□□-FL6-07		0.28 (7.1)	6.00	2.00	3.05 (77.5)	0.56 (14.2)	0.56 (14.2)	1.43 (36.3)	0.35 (9)	2.19 (55.5)	2.05 (52)	1 1/8 (28.6)
BO□□-FL8-10	1/2" FITOK	0.41 (10.3)	12.00	4.60	3.92 (99.6)	0.69 (17.5)	0.69 (17.5)	1.74 (44.2)	0.49 (12.5)	2.67 (67.7)	3.13 (79.6)	1 1/2 (38.1)
BO□□-FL12-10	3/4" FITOK		6.40	3.80								
BO□□-ML3-02	3 mm FITOK	0.09 (2.4)	0.20	0.15	2.01 (51.1)	0.28 (7.1)	0.34 (8.6)	0.97 (24.6)	0.25 (6.4)	1.43 (36.2)	1.10 (28)	19/32 (15.1)
BO□□-ML6-03	6 mm FITOK	0.13 (3.2)	0.60	0.35	2.21 (56.1)			1.07 (27.2)				
BO□□-ML6-05		0.19 (4.8)	1.40	0.90	2.39 (60.7)	0.38 (9.7)	0.44 (11.2)	1.17 (29.7)	0.19 (4.8)	1.64 (41.7)	1.57 (39.9)	25/32 (19.8)
BO□□-ML8-05	8 mm FITOK		1.50		2.46 (62.5)			1.20 (30.5)				
BO□□-ML10-07	10 mm FITOK	0.28 (7.1)	6.00	2.00	3.07 (78.0)	0.56 (14.2)	0.56 (14.2)	1.43 (36.3)	0.35 (9)	2.19 (55.5)	2.05 (52)	1 1/8 (28.6)
BO□□-ML12-10	12 mm FITOK	0.41 (10.3)	12.00	4.60	3.92 (99.6)	0.69 (17.5)	0.69 (17.5)	1.74 (44.2)	0.49 (12.5)	2.67 (67.7)	3.13 (79.6)	1 1/2 (38.1)
BO□□-FNS2-03	1/8 Female NPT	0.13 (3.2)	0.50	0.30	1.63 (41.4)	0.28 (7.1)	0.34 (8.6)	0.81 (20.6)	0.25 (6.4)	1.43 (36.2)	1.10 (28)	19/32 (15.1)
BO□□-FNS2-05		0.19 (4.8)	1.20	0.70	2.00 (50.8)	0.38 (9.7)	0.44 (11.2)	1.00 (25.4)	0.19 (4.8)	1.64 (41.7)	1.57 (39.9)	25/32 (19.8)
BO□□-FNS4-05	1/4 Female NPT		0.90	0.75	2.06 (52.3)			1.03 (26.2)				
BO□□-FNS4-07		0.28 (7.1)	3.00	1.70	2.50 (63.5)	0.56 (14.2)	0.56 (14.2)	1.25 (31.8)	0.35 (9)	2.19 (55.5)	2.05 (52)	11/8 (28.6)
BO□□-FNS6-07	3/8 Female NPT		2.60	1.50								
BO□□-FNS8-10	1/2 Female NPT	0.41 (10.3)	6.30	3.50	3.12 (79.2)	0.69 (17.5)	0.69 (17.5)	1.56 (39.6)	0.49 (12.5)	2.67 (67.7)	3.13 (79.6)	11/2 (38.1)
BO□□-NS4-05	1/4 Male NPT	0.19 (4.8)	1.20	0.75	2.00 (50.8)	0.38 (9.7)	0.44 (11.2)	1.03 (26.2)	0.19 (4.8)	1.64 (41.7)	1.57 (39.9)	25/32 (19.8)
BO□□-FRT4-05	1/4 Female BSPT		0.90	——	2.06 (52.3)			——				
BO□□-FRT6-07	3/8 Female BSPT	0.28 (7.1)	2.60		2.50 (63.5)	0.56 (14.2)	0.56 (14.2)		0.35 (9)	2.19 (55.5)	2.05 (52)	1 1/8 (28.6)
BO□□-FRT8-10	1/2 Female BSPT	0.41 (10.3)	6.30		3.12 (79.2)	0.69 (17.5)	0.69 (17.5)		0.49 (12.5)	2.67 (67.7)	3.13 (79.6)	1 1/2 (38.1)
BO□□-FO4-03	1/4 Male FO	0.13 (3.2)	0.60	0.35	1.75 (44.4)	0.38 (9.7)	0.34 (8.6)	0.94 (23.9)	0.25 (6.4)	1.43 (36.2)	1.10 (28)	19/32 (15.1)
BO□□-FO4-05		0.19 (4.8)	2.40	0.90	1.88 (47.8)		0.44 (11.2)		0.19 (4.8)	1.64 (41.7)	1.57 (39.9)	25/32 (19.8)
BO□□-FR4-03	1/4 Male FR	0.13 (3.2)	0.60	0.35	2.13 (54.1)		0.34 (8.6)	1.09 (27.7)	0.25 (6.4)	1.43 (36.2)	1.10 (28)	19/32 (15.1)
BO□□-FR4-05		0.19 (4.8)	2.40	0.90			0.44 (11.2)		0.19 (4.8)	1.64 (41.7)	1.57 (39.9)	25/32 (19.8)
BO□□-FR8-07	1/2 Male FR	0.28 (7.1)	6.00	——	2.88 (73.2)	0.56 (14.2)		——	0.35 (9)	2.19 (55.5)	2.05 (52)	1 1/8 (28.6)
BO□□-FR8-10		0.41 (10.3)	12.00		3.12 (79.2)	0.69 (17.5)			0.49 (12.5)	2.67 (67.7)	3.13 (79.6)	1 1/2 (38.1)

Switching (3-, 4-, 5-, 6- and 7-Way) Valves

Standard Flow Path

3-way Valves



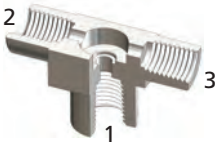

4-way Valves



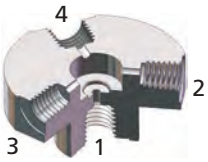

3L Flow Path

This type of valve can connect one side port to the bottom port or shut off 3 ports. Switch between 0°, 90° and 180° positions with 180° rotation handle.



Ports 1 and 3 open



Off

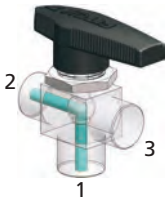

Ports 1 and 2 open

4L Flow Path

This type of valve can connect one side port to the bottom port, and shut off other 2 side ports at the same time. Switching can be done in 120° increments with 360° rotation handle.



Ports 1 and 2 open



Ports 1 and 3 open



Ports 1 and 4 open

5-way Valves





5L Flow Path

This type of valve can connect one side port to the bottom port, and shut off other 3 side ports at the same time. Switching can be done in 90° increments with 360° rotation handle.



Ports 1 and 2 open



Ports 1 and 3 open



Ports 1 and 4 open



Ports 1 and 5 open

6-way Valves



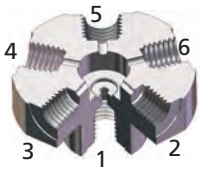

6L Flow Path

This type of valve can connect one side port to the bottom port, and shut off other 4 side ports at the same time. Switching can be done in 72° increments with 360° rotation handle.



Ports 1 and 2 open



Ports 1 and 3 open



Ports 1 and 4 open



Ports 1 and 5 open



Ports 1 and 6 open

7-way Valves

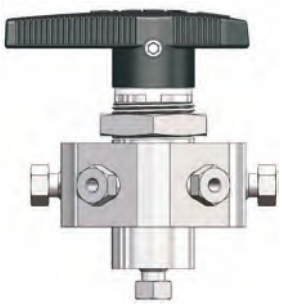

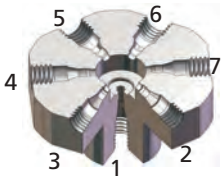

7L Flow Path

This type of valve can connect one side port to the bottom port, and shut off other 5 side ports at the same time. Switching can be done in 60° increments with 360° rotation handle.

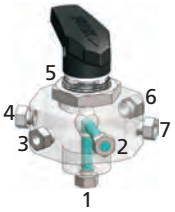

Ports 1 and 2 open



Ports 1 and 3 open



Ports 1 and 4 open

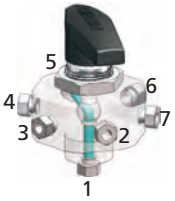

Ports 1 and 5 open



Ports 1 and 6 open



Ports 1 and 7 open

Pressure vs. Temperature

Switching Valves

PTFE Packing Seat

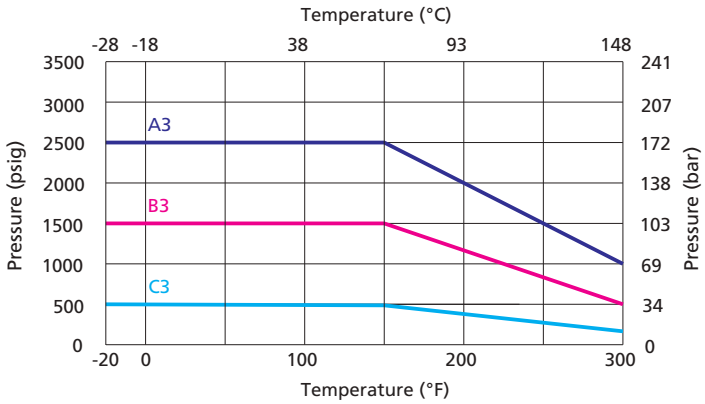

A3: 3-way (orifice 0.05"& 0.06"& 0.09"& 0.13"&0.19")
4-way / 5-way (orifice 0.06")

B3: 3-way (orifice 0.28"& 0.41")
4-way / 5-way (orifice 0. 41")

C3: 6-way / 7-way (orifice 0. 05" & 0. 06")

PFA, UHMWPE Packing Seat

The working temperature of UHMWPE packing seat should not be higher than 150°F (65°C).

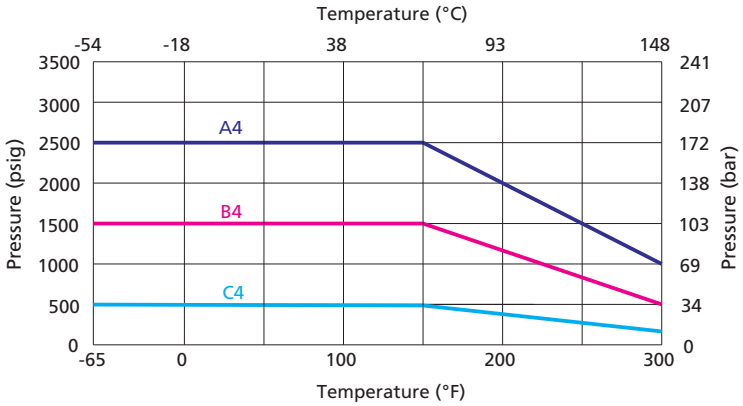

A4: 3-way (orifice 0.05"& 0.06"& 0.09"& 0.13"&0.19")
4-way / 5-way (orifice 0.06")

B4: 3-way (orifice 0.28"& 0.41")
4-way / 5-way (orifice 0. 41")

C4: 6-way / 7-way (orifice 0. 05" & 0. 06")

Dimensions

3-way Valves

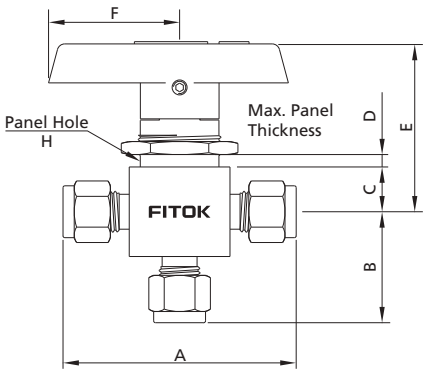

4-and 5-way Valves

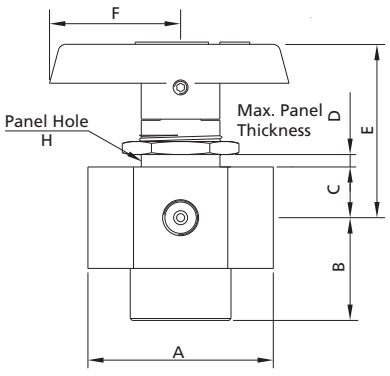

6-and 7-way Valves

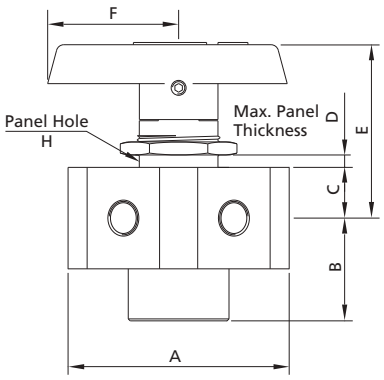

Basic Ordering Number	Connection Type and Size	Orifice in. (mm)	Cv	Dimensions, in. (mm)						
				A	B	C	D	E	F	H
	3-way Valves									
BO□□-FL1-00-3L	1/16" FITOK	0.05 (1.3)	0.08	1.68 (42.7)	0.81 (20.6)	0.34 (8.6)	0.25 (6.4)	1.43 (36.2)	1.10 (28)	19/32 (15.1)
BO□□-FL2-02-3L	1/8" FITOK	0.09 (2.4)	0.15	2.01 (51.1)	0.97 (24.6)					
BO□□-FL4-03-3L	1/4" FITOK	0.13 (3.2)	0.35	2.21 (56.1)	1.07 (27.2)					
BO□□-FL4-05-3L		0.19 (4.8)	0.90	2.39 (60.7)	1.17 (29.7)	0.44 (11.2)	0.19 (4.8)	1.64 (41.7)	1.57 (39.9)	25/32 (19.8)
BO□□-FL6-07-3L	3/8" FITOK	0.28 (7.1)	2.00	2.89 (73.4)	1.43 (36.3)	0.56 (14.2)	0.35 (9)	2.19 (55.5)	2.05 (52)	11/8 (28.6)
BO□□-FL8-10-3L	1/2" FITOK	0.41 (10.3)	4.60	3.48 (88.4)	1.74 (44.2)	0.69 (17.5)	0.49 (12.5)	2.67 (67.7)	3.13 (79.6)	11/2 (38.1)
BO□□-FL12-10-3L	3/4" FITOK		4.90							
BO□□-ML3-02-3L	3 mm FITOK	0.09 (2.4)	0.15	2.01 (51.1)	0.97 (24.6)	0.34 (8.6)	0.25 (6.4)	1.43 (36.2)	1.10 (28)	19/32 (15.1)
BO□□-ML6-03-3L	6 mm FITOK	0.13 (3.2)	0.35	2.21 (56.1)	1.07 (27.2)					
BO□□-ML6-05-3L		0.19 (4.8)	0.90	2.39 (60.7)	1.17 (29.7)	0.44 (11.2)	0.19 (4.8)	1.64 (41.7)	1.57 (39.9)	25/32 (19.8)
BO□□-ML8-05-3L	8 mm FITOK		0.80	2.46 (62.5)	1.20 (30.5)					
BO□□-ML10-07-3L	10 mm FITOK	0.28 (7.1)	2.00	2.89 (73.4)	1.43 (36.3)	0.56 (14.2)	0.35 (9)	2.19 (55.5)	2.05 (52)	1 1/8 (28.6)
BO□□-ML12-10-3L	12 mm FITOK	0.41 (10.3)	4.60	3.48 (88.4)	1.74 (44.2)	0.69 (17.5)	0.49 (12.5)	2.67 (67.7)	3.13 (79.6)	1 1/2 (38.1)
BO□□-FNS2-03-3L	1/8 Female NPT	0.13 (3.2)	0.30	1.63 (41.4)	0.81 (20.6)	0.34 (8.6)	0.25 (6.4)	1.43 (36.2)	1.10 (28)	19/32 (15.1)
BO□□-FNS4-05-3L	1/4 Female NPT	0.19 (4.8)	0.75	2.06 (52.3)	1.03 (26.2)	0.44 (11.2)	0.19 (4.8)	1.64 (41.7)	1.57 (39.9)	25/32 (19.8)
BO□□-FNS4-07-3L		0.28 (7.1)	1.70	2.5 (63.5)	1.18 (30)	0.56 (14.2)	0.35 (9)	2.19 (55.5)	2.05 (52)	1 1/8 (28.6)
BO□□-FNS6-07-3L	3/8 Female NPT		1.50							
BO□□-FNS8-10-3L	1/2 Female NPT	0.41 (10.3)	3.50	3.13 (79.5)	1.56 (39.6)	0.69 (17.5)	0.49 (12.5)	2.67 (67.7)	3.13 (79.6)	1 1/2 (38.1)
BO□□-FRT4-05-3L	1/4 Female BSPT	0.19 (4.8)	0.75	2.06 (52.3)	1.03 (26.2)	0.44 (11.2)	0.19 (4.8)	1.64 (41.7)	1.57 (39.9)	25/32 (19.8)
BO□□-FRT6-07-3L	3/8 Female BSPT	0.28 (7.1)	1.50	2.5 (63.5)	1.18 (30)	0.56 (14.2)	0.35 (9)	2.19 (55.5)	2.05 (52)	1 1/8 (28.6)
BO□□-FRT8-10-3L	1/2 Female BSPT	0.41 (10.3)	3.50	3.13 (79.5)	1.56 (39.6)	0.69 (17.5)	0.49 (12.5)	2.67 (67.7)	3.13 (79.6)	1 1/2 (38.1)
	4 - & 5-way Valves									
BO□□-FL2-01-4L	1/8" Female FITOK Tube Fitting	0.06 (1.6)	0.07	2.36 (60)	1.32 (33.5)	0.44 (11.2)	0.20 (5.2)	1.76 (44.6)	1.57 (39.9)	29/32 (23.1)
BO□□-FL2-01-5L										
BO□□-FNS2-01-4L	1/8 Female NPT	0.06 (1.6)	0.07	1.85 (47)	0.88 (22.4)					
BO□□-FNS2-01-5L				1.55 (39.4)						
BO□□-FNS8-10-4L	1/2 Female NPT	0.41 (10.3)	3.50	3.13 (79.5)	1.56 (39.6)	0.69 (17.5)	0.41 (10.5)	2.67 (70.2)	2.63 (66.7)	1 1/2 (38.1)
BO□□-FNS8-10-5L										
	6 - & 7-way Valves									
BO□□-FL1-00-6L	1/16" Female FITOK Tube Fitting	0.05 (1.3)	0.05	2.64 (67)	1.32 (33.5)	0.44 (11.2)	0.28 (7)	1.76 (44.6)	1.57 (39.9)	29/32 (23.1)
BO□□-FL1-00-7L										
BO□□-FL2-01-6L	1/8" Female FITOK Tube Fitting	0.06 (1.6)	0.07	2.26 (57.6)	0.97 (24.7)					
BO□□-FL2-01-7L										

Crossover (4-, 6-Way) Valves

Standard Flow Path

4-way Valves





6-way Valves



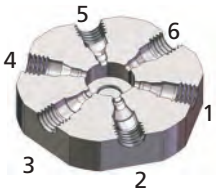

4C Flow Path

This type of valve can connect two groups of adjacent ports at the same time. Switch between 0° and 90° positions with 90° rotation handle.



Ports 1 and 2 open
Ports 3 and 4 open



Ports 1 and 4 open
Ports 2 and 3 open

6C Flow Path

This type of valve can connect three groups of adjacent ports at the same time. Switch between 0° and 60° positions with 60° rotation handle.



Ports 1 and 2 open
Ports 3 and 4 open
Ports 5 and 6 open

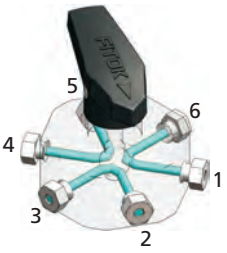

Ports 1 and 6 open
Ports 2 and 3 open
Ports 4 and 5 open

Pressure vs. Temperature

Crossover Valves

PTFE Packing Seat

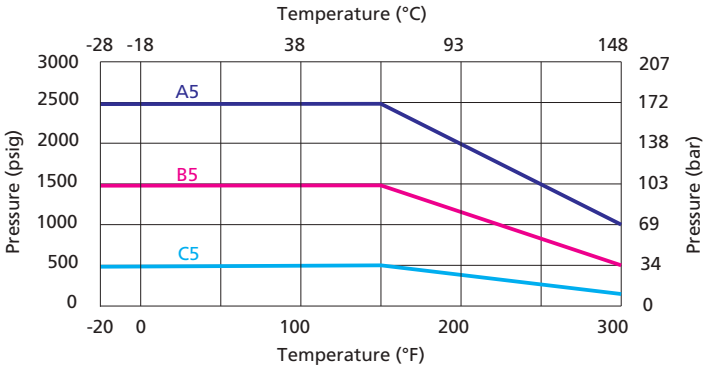

A5: 4-way (orifice 0.06")

B5: 4-way (orifice 0.41")

C5: 6-way (orifice 0.05" & 0.06")

PFA, UHMWPE Packing Seat

The working temperature of UHMWPE packing seat should not be higher than 150°F (65°C).

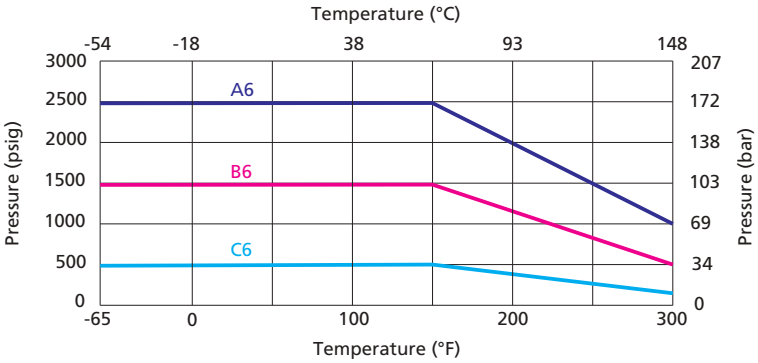

A6: 4-way (orifice 0.06")

B6: 6-way (orifice 0.41")

C6: 6-way (orifice 0.05"& 0. 06")

Dimensions

4-way Valves

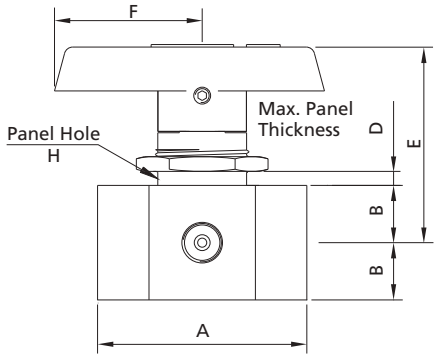

6-way Valves

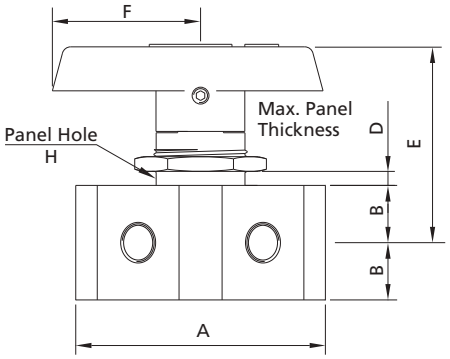

Basic Ordering Number	Connection Type and Size	Orifice in. (mm)	Cv	Dimensions, in. (mm)					
				A	B	D	E	F	H
4-way Valve									
BO□□-FL1-00-4C	1/16" Female FITOK Tube Fitting ①	0.05 (1.3)	0.06	1.95 (49.6)	0.44 (11.2)	0.19 (4.8)	1.64 (41.7)	1.57 (39.9)	25/32 (19.8)
BO□□-FL2-01-4C	1/8" Female FITOK Tube Fitting ①	0.06 (1.6)	0.08	2.61 (66.3)					
BO□□-FNS2-01-4C	1/8 Female NPT ①			1.55 (39.4)					
BO□□-FNS8-07-4C	1/2 Female NPT ②	0.28 (7.1)	1.60	3.13 (79.5)	0.69 (17.5)	0.48 (12.2)	2.67 (67.7)	3.13 (79.6)	1 1/2 (38.1)
6-way Valve									
BO□□-FL1-00-6C	1/16" Female FITOK Tube Fitting	0.05 (1.3)	0.06	1.95 (49.5)	0.44 (11.2)	0.19 (4.8)	1.68 (42.7)	1.53 (38.9)	29/32 (23.1)
BO□□-FL2-01-6C	1/8" Female FITOK Tube Fitting	0.06 (1.6)	0.08	2.59 (65.8)					

Notes: Connection type for ball valves in 4L, 5L, 6L, 7L, 4C, 6C, 4H, 4HL, 4V, 5HL, 5H and 5LV flow path is female FITOK tube fitting, which can not be used directly with standard FT and MT connections. Please contact FITOK Group or authorized distributors for use with standard FT and MT connections.

① There might be an across-connection flow during switching. If it is not acceptable to you, please specify a spherical orifice of 0.049 in. Example: BOSS-FL2-01-4C-049.

② There might be an across-connection flow during switching. If it is not acceptable to you, please specify a spherical orifice of 0.093 in. Example: BOSS-FNS8-07-4C-093.

1. FITOK means FITOK double ferrule tube fittings.
2. Sizes and types listed are standard. Other sizes and types are available upon request, please contact FITOK Group or our authorized distributors.
3. Dimensions are shown with tube fitting nuts finger-tightened. All dimensions are for reference only and are subject to change. For dimensions not shown above, please contact FITOK Group or our authorized distributors.

Special Flow Path

3-way Valves



3HL Flow Path

This type of valve can connect one side port to the bottom port, or connect two side ports to the bottom port. Switching can be done in 90° increments with 180° rotation handle.



Ports 1 and 3 open



Ports 1, 2 and 3 open



Ports 1 and 2 open

Note: For Temperature VS. Pressure curves and dimensions of 3-way valves, see Switching (3-way) Valves above. For Temperature VS. Pressure curves and dimensions of 4-way valves , see Crossover (4-way) Valves above.

4-way Valves

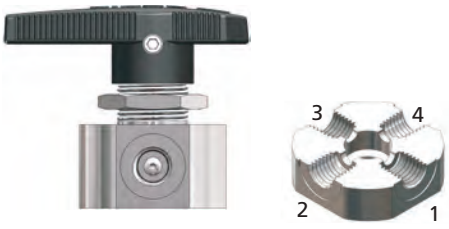

4H Flow Path

This type of valve can connect two opposite ports. Switch between 0° and 90° positions with 90° rotation handle.



Ports 1 and 3 open



Ports 2 and 4 open

4HL Flow Path

This type of valve can connect three adjacent ports and shut off other ports. Switching can be done in 90° increments with 360° rotation handle.



Ports 1, 2 and 4 open



Ports 1, 2 and 3 open



Ports 2, 3 and 4 open



Ports 1, 3 and 4 open

4V Flow Path

This type of valve can connect two adjacent ports and shut off other ports. Switching can be done in 90° increments with 360° rotation handle.



Ports 1 and 2 open



Ports 2 and 3 open



Ports 3 and 4 open



Ports 1 and 4 open

5-way Valves





5H Flow Path

This type of valve can connect the bottom port to port 2 and port 4, or connect the bottom port to port 3 and port 5. Switch between 0° and 90° positions with 90° rotation handle.

5HL Flow Path

This type of valve can connect three side ports to the bottom port, and shut off the fourth side port at the same time. Switching can be done in 90° increments with 360° rotation handle.



Ports 1, 2, 3 and 5 open | Ports 1, 2, 3 and 4 open | Ports 1, 3, 4 and 5 open | Ports 1, 2, 4 and 5 open

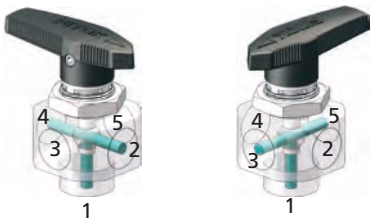

Ports 1, 2 and 4 open | Ports 1, 3 and 5 open

5LV Flow Path

This type of valve can connect two adjacent ports to the bottom port, and shut off other two side ports at the same time. Switching can be done in 90° increments with 360° rotation handle.

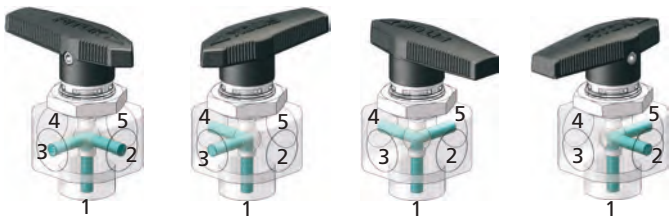

Ports 1, 2 and 3 open | Ports 1, 3 and 4 open | Ports 1, 4 and 5 open | Ports 1, 2 and 5 open

Note: For Temperature vs. Pressure curve and dimensions of 5-way valves, see Switching (5-way) Valves above.

Vent Port Options

Vented Valves

The maximum working pressure for vented valves is 500 psig (34.5 bar).

Straight-pattern Valves

A vent hole in the side of the valve body makes the downstream port vent to atmosphere when the valve is closed.

Angle-pattern and 3-way Valves

A vent hole in the side of the valve body makes the bottom port vent to atmosphere when the valve is closed.

Welded Vent Port Connections

A FITOK tube fitting or a tube stub welded to the vent port is available for stainless steel vented valves.

Process Option

Valves with FOG process are available. FOG refers to FC-02 without lubrication.
To order a valve with FOG process, add -FOG suffix to the valve ordering number, for example: BOSS-FL4-05-FOG.
The pressure rating of valves with FOG process: 200 psig (13.8 bar) for orifice 10, 500 psig (34.5 bar) for other orifice.
The starting torque of valves with FOG process is greater than that of the lubricated valves.

Bottom Screw Panel Mounting Options

Mounting Dimensions

The bottom screw panel mounting options are not available on angle-pattern valves, 3-way valves, 6-way valves and 7-way valves.

2-way

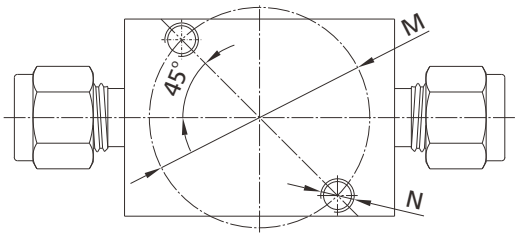

4-way

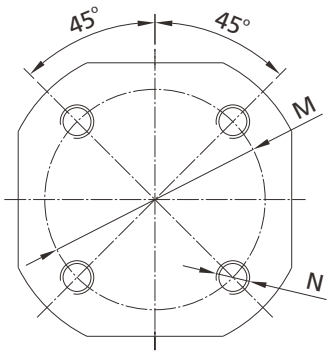

5-way

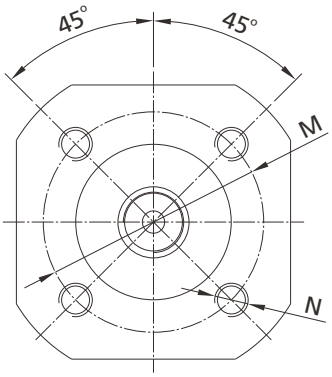

	Orifice in. (mm)	Dimensions, in. (mm)	
		M	N
2-way	0.05~0.13 (1.3~3.2)	0.63 (15.88)	M2.5 x 0.45 deep 0.24" (6)
	0.19 (4.8)	0.88 (22.23)	M3 x 0.5 deep 0.24" (6)
	0.28 (7.1)	1.25 (31.75)	M5 x 0.8 deep 0.24" (6)
	0.41 (10.3)	1.63 (41.28)	M5 x 0.8 deep 0.24" (6)
4-way	0.05~0.06 (1.3~1.6)	1.25 (31.75)	M5 x 0.8 deep 0.24" (6)
	0.28 (7.1)	2.00 (50.8)	M5 x 0.8 deep 0.24" (6)
5-way	0.05~0.06 (1.3~1.6)	1.25 (31.75)	M5 x 0.8 deep 0.24" (6)
	0.41 (10.3)	2.00 (50.8)	M5 x 0.8 deep 0.24" (6)

Locking Device

◎ Locking Device 1 can lock BO series valves with 90° or 180° rotation handle, locking hole diameter is 0.21 in (5.2 mm);

◎ To order a ball valve with locking device 1, add -**LH** to the valve ordering number.
Example: BOSS-FL6-07-**LH**/BOSS-FL6-07-3L-**LH**

◎ Locking Device 2 can lock BO series valves with 90°,180°, or 360° rotation handle, locking hole diameter is 0.34 in (8.7 mm);

◎ To order a ball valve with locking device 2, add -**LK** to the valve ordering number.
Example: BOSS-ML6-05-**LK**/BOSS-ML6-05-5L-**LK**

Caution: These handles are designed to prevent unintentional valve operation. They are not tamper resistant and can be removed, even when locked.

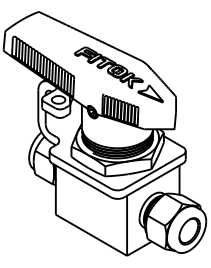

Diagram of Locking Device 1

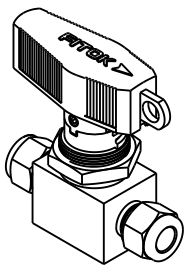

Diagram of Locking Device 2

Ball Valve without Handle

◎ Ball Valve without handle can be directly connected to the FITOK actuator assembly.

◎ To order, please add - **AM** to the valve ordering number.
Example: BOSS-FL4-05- **AM**

Ordering Number Description

BOSS - ML6 - FL4 - ML8 - H05 - DXHQ3L - BLH - FL4 - SF2

Series
BO

Body Material	
SS	316 SS
S4	304 SS
S1	321 SS
6L	316L SS
B	Brass
M	Alloy 400

Connection 1 Type	
FNS	Female NPT
NS	Male NPT
FRT	Female BSPT
RT	Male BSPT
FMS	Female Metric Thread (for RG-M)
MS	Male Metric Thread (for RG-M)
FRP	Female BSPP (for RP)
FL	Fractional Tube Fitting
ML	Metric Tube Fitting
FO	Male FO Fitting
FR	Male FR Fitting

Connection 1 Size	
1	1/16"
2	1/8"
3	3 mm
4	1/4"
6	3/8" or 6 mm
8	1/2" or 8 mm
10	10 mm
12	3/4" or 12 mm
14	14 mm
16	16 mm
18	18 mm

Connection 2 to 7 Type	Connection 2 to 7 Size
	Same as connection 1
Specified in the same way as connection 1 type and size	

Seat Material	
	PTFE
H	UHMWPE
A	PFA

Orifice Size	
00	0.05" (1.3 mm)
01	0.06" (1.6 mm)
02	0.09" (2.4 mm)
03	0.13" (3.2 mm)
05	0.19" (4.8 mm)
07	0.28" (7.1 mm)
10	0.41" (10.3 mm)

Handle/Actuator	
	Black Nylon Handle
I	Red Nylon Handle
GR	Green Nylon Handle
J	Blue Nylon Handlle
AM	Without Handle
U	Black Aluminium Handle
C	90° Normally Closed Pneumatic Actuator
O	90° Normally Open Pneumatic Actuator
D	90° Double Acting Pneumatic Actuator
LX	180° Left End Normally Open Pneumatic Actuator
RX	180° Right End Normally Open Pneumatic Actuator
DX	180° Double Acting Pneumatic Actuator
E	90° Electric Actuator
EX	180° Electric Actuator

For Actuator	
	None
H	Mechanical Limit Switch
N	Inductive Limit Switch
Q	Solenoid Valve
HQ	Mechanical Limit Switch and Solenoid Valve
NQ	Inductive Limit Switch and Solenoid Valve

Flow Pattern	
	Straight
A	Angle
3L	3-way
3HL	3-way
4L	4-way
4C	4-way
4H	4-way
4HL	4-way
4V	4-way
5L	5-way
5H	5-way
5HL	5-way
5LV	5-way
6L	6-way
6C	6-way
7L	7-way

Panel Installation	
	Panel nut
B	Bottom screw

Locking Device	
	No
LH	Locking Device 1
LK	Locking Device 2

Vent Port	
	No vent port
FL2	1/8" tube fitting
FL4	1/4" tube fitting
FL6	3/8" tube fitting
ML3	3 mm tube fitting
ML6	6 mm tube fitting
ML8	8 mm tube fitting

Special Application	
	None
S	NACE MR0175
SI	SilcoNert® 2000 (Sulfinert®) Coating
CE	CE Certification

Cleaning and Packaging	
	FC-01
F2	FC-02
FOG	FC-02 without Lubrication

Note: "Ordering Number Description" is a reference to understand the combination rules of FITOK product part number. Not all combinations are available.

1. For oxygen-enriched environment or hazardous media service, contact FITOK Group or our authorized distributors.
2. Cleaning and Packaging:
   FC-01: Standard cleaning and packaging for general industrial procedures.
   FC-02: Special cleaning and packaging for wetted system components to ensure compliance with product cleanliness requirement of ASTM G93 Level C.
3. For more information about pneumatic actuator ball valves, please refer to the catalog Actuated Ball Valves.
4. SilcoNert® 2000 (Sulfinert®) Coating: Wetted metal components SilcoNert® 2000 (Sulfinert®) coated.
5. CE certification is available. For more information, please contact FITOK group or our authorized distributors.

Bar Stock Ball Valves

BP Series

Features



- ◎ Working pressure up to: 10000 psig (690 bar)
- ◎ Working temperature: -40°F to 450°F (-40°C to 232°C)
- ◎ Bidirectional flow for 2-way valves
- ◎ Seat wear compensation by free floating ball
- ◎ Variety of end connections
- ◎ Blowout proof stem with self-sealing function
- ◎ Handle color options available
- ◎ Optional pneumatic and electric actuator
- ◎ Leak-tight performance testing with nitrogen or compressed air for every valve at the rated pressure (not higher than 6000 psig) to meet the requirement of no visible leak
- ◎ Restricted flow path for BP series: only port 1 as inlet, port 2 and port 3 as outlet

Pressure vs. Temperature

2-way Valves

Orifice code: 10

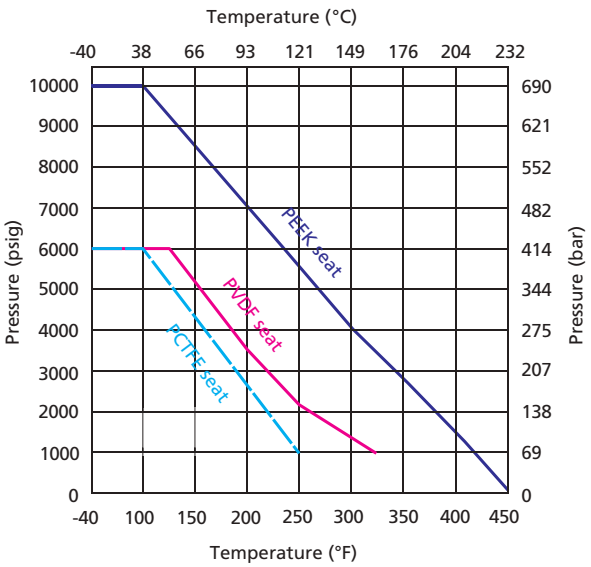

Orifice code: 13 and 19

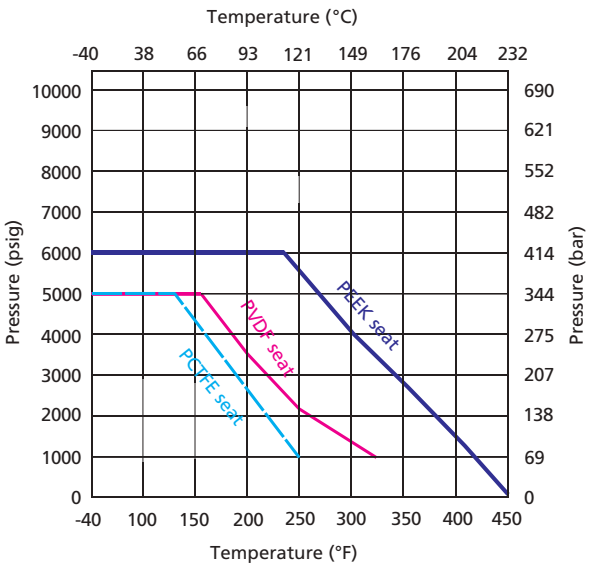

3-way Valves

Orifice code: 10

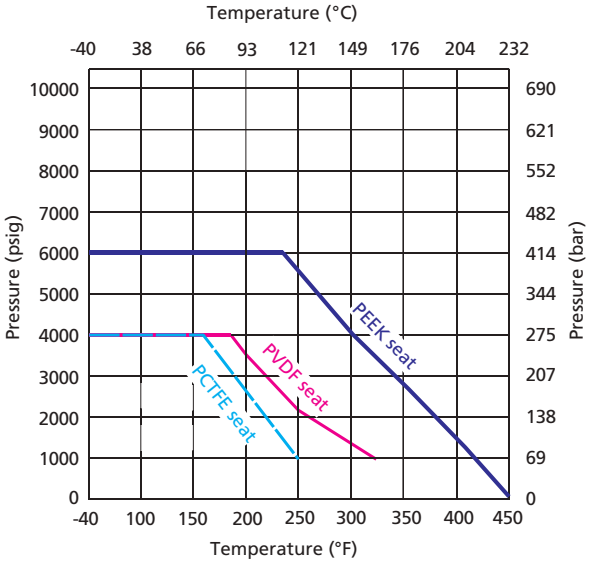

Orifice code: 13 and 19

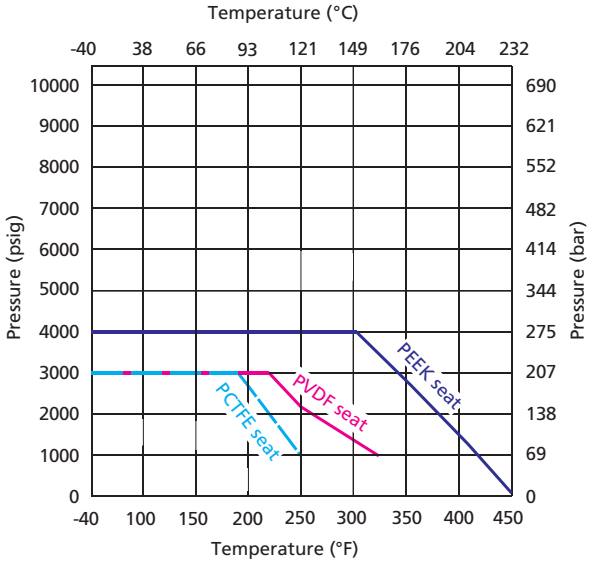

Notes: 1. Graphs are with 316 SS body. For information of body in other materials, please contact FITOK Group or our authorized distributors.
2. The working pressure of valves is restricted by materials of the valve body and seat, as well as end connections. When choosing a valve for your applications, please refer to the above Temperature vs. Pressure Curves and the pressure rating in the dimension table. The minimum value shall be the pressure rating of the valve.

Standard Materials of Construction

2-way Valves

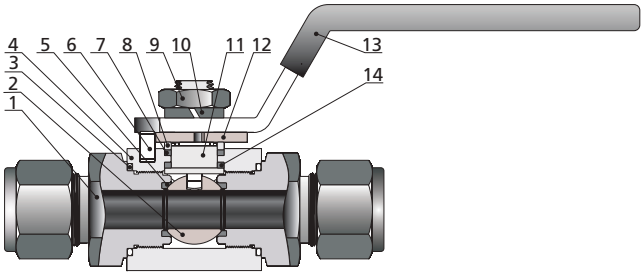

3-way Valves

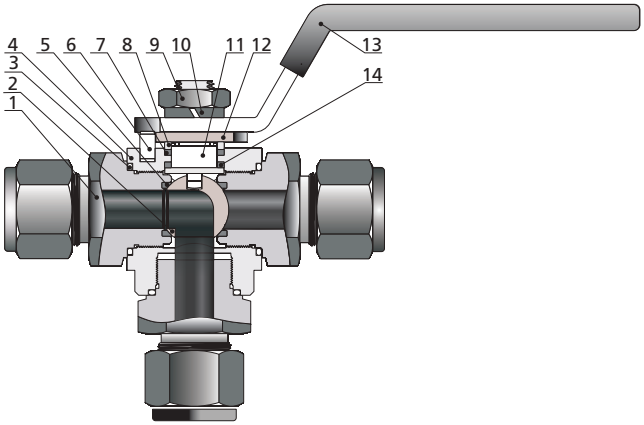

Item	Component	Body Material
		316 SS
1	*End Connection*	*316 SS/A479*
2	*Ball*	*316 SS/A479*
3	*O-ring*	*Fluorocarbon FKM*
4	*Body*	*316 SS/A479*
5	*Seat*	*PVDF or PCTFE or PEEK*
6	Stop Pin	SS
7	*Stem Packing*	*PTFE/D1710*
8	Stem Washer	316 SS/A479
9	Stem Nut ①	SS
10	Spring Washer	SS
11	*Stem*	*316 SS/A479*
12	Stop Block	304 SS/A240
13	Handle	SS with vinyl cover
14	Lower Packing ②	PEEK

Note: Wetted components are listed in italics.
For other materials, please contact FITOK Group or our authorized distributors.
① Ball valves with orifice code 13 or 19 have 2 stem nuts.
② Lower packing material of ball valves with orifice code 19 is PTFE.

Dimensions

2-way Valves

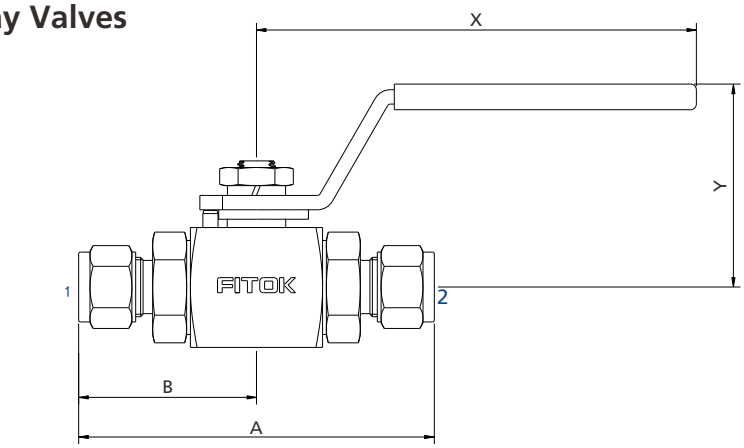

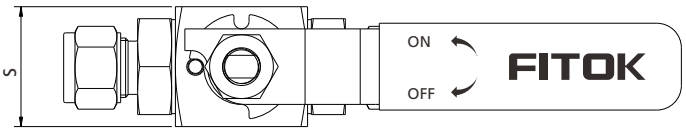

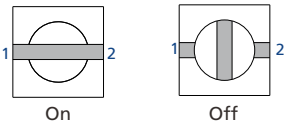

Basic Ordering Number	Connection Type and Size	Pressure Rating of End Connections @ 100°F (38°C), psig (bar)	Orifice in. (mm)	Cv	Dimensions, in. (mm)				
	Connection 1/2	316 SS			A	B	X	Y	S
BP□□-ML6-10	6 mm FITOK	10000 (690)	0.19(4.8)	1.2	3.54 (90.0)	1.77 (45.0)	4.57 (116.0)	2.10 (53.4)	1.30 (32.0)
BP□□-ML8-10	8 mm FITOK	7500 (517)	0.25(6.4)	2.3	3.60 (91.6)	1.80 (45.8)			
BP□□-ML10-10	10 mm FITOK	8400 (579)	0.31(7.9)	3.8	3.70 (94.0)	1.85 (47.0)			
BP□□-ML12-10	12 mm FITOK	6800 (469)	0.39 (10.0)	7.5	3.94 (100.0)	1.97 (50.0)			
BP□□-ML14-10	14 mm FITOK	6200 (427)							
BP□□-FL4-10	1/4" FITOK	10000 (690)	0.19(4.8)	1.2	3.56 (90.4)	1.78 (45.2)			
BP□□-FL6-10	3/8" FITOK	7500 (517)	0.28(7.1)	3.7	3.72 (94.6)	1.86 (47.3)			
BP□□-FL8-10	1/2" FITOK	6700 (462)	0.39 (10.0)	7.5	3.92 (99.6)	1.96 (49.8)			
BP□□-FNS4-10	1/4 Female NPT	10000 (690)			3.03 (77.0)	1.52 (38.5)			
BP□□-FNS6-10	3/8 Female NPT	10000 (690)			2.80 (71.0)	1.40 (35.5)			
BP□□-FNS8-10	1/2 Female NPT	10000 (690)			3.27 (83.0)	1.63 (41.5)			
BP□□-NS4-10	1/4 Male NPT	10000 (690)	0.28(7.1)	3.7	3.36 (85.4)	1.68 (42.7)			
BP□□-NS6-10	3/8 Male NPT	10000 (690)	0.39 (10.0)	7.5					
BP□□-NS8-10	1/2 Male NPT	10000 (690)			3.75 (95.2)	1.88 (47.6)			
BP□□-ML16-13	16 mm FITOK	5800 (400)	0.50 (12.7)	10.0	4.42 (112.2)	2.21 (56.1)	5.59 (142.0)	2.54 (64.4)	1.50 (38.0)
BP□□-ML18-13	18 mm FITOK	5400 (372)			4.12 (104.6)	2.06 (52.3)			
BP□□-ML20-13	20 mm FITOK	5500 (379)			4.43 (112.6)	2.22 (56.3)			
BP□□-ML22-13	22 mm FITOK	4900 (338)			4.29 (109.0)	2.15 (54.5)			
BP□□-FL10-13	5/8" FITOK	6000 (414)			4.36 (110.6)	2.18 (55.3)			
BP□□-FL12-13	3/4" FITOK	5800 (400)							
BP□□-FNS8-13	1/2 Female NPT	6000 (414)			3.54 (90.0)	1.77 (45.0)			
BP□□-FNS12-13	3/4 Female NPT	6000 (414)			4.09 (104.0)	2.05 (52.0)			
BP□□-NS12-13	3/4 Male NPT	6000 (414)			4.14 (105.2)	2.07 (52.6)			
BP□□-ML20-19	20 mm FITOK	5500 (379)	0.71 (18.0)	30.0	4.87 (123.8)	2.43 (61.9)	6.46 (164.0)	2.72 (69.0)	1.96 (50.0)
BP□□-ML22-19	22 mm FITOK	4900 (338)							
BP□□-ML25-19	25 mm FITOK	4600 (317)			5.11 (129.8)	2.66 (64.9)			
BP□□-FL12-19	3/4" FITOK	5800 (400)			4.59 (116.6)	2.29 (58.3)			
BP□□-FL16-19	1" FITOK	4700 (324)			5.11 (129.8)	2.66 (64.9)			
BP□□-FNS12-19	3/4 Female NPT	6000 (414)			3.81 (96.8)	1.91 (48.4)			
BP□□-FNS16-19	1 Female NPT	6000 (414)			4.26 (108.2)	2.13 (54.1)			
BP□□-NS16-19	1 Male NPT	6000 (414)			4.91 (124.8)	2.45 (62.4)			

3-way Valves

Vertical Pattern

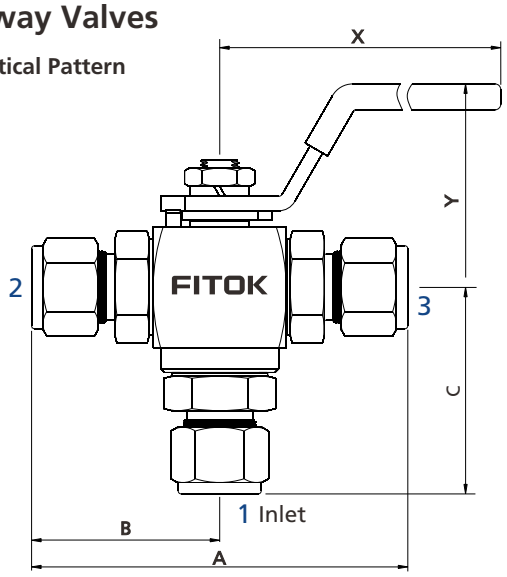

Port 1 as inlet
180° rotation handle

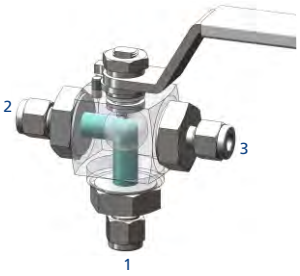

Port 1 to port 2

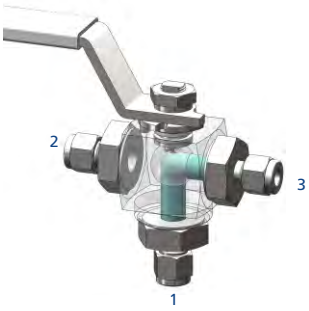

Port 1 to port 3

Horizontal Pattern

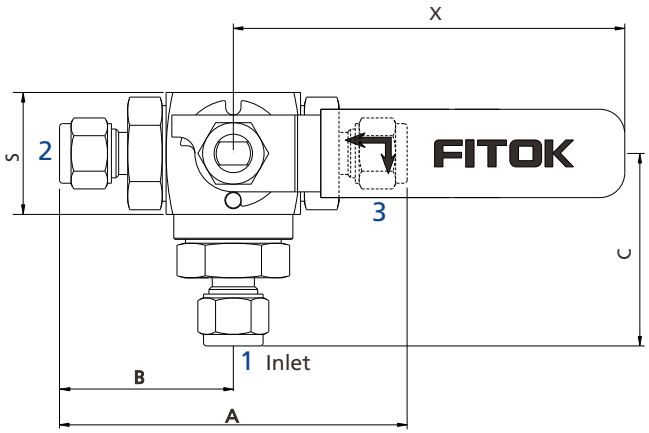

Port 1 as inlet
90° rotation handle

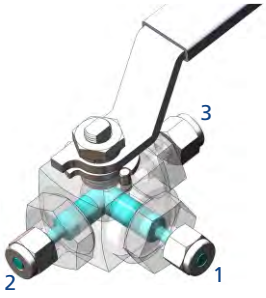

Port 1 to port 2

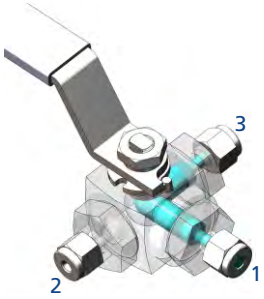

Port 1 to port 3

Basic Ordering Number	Connection Type and Size	Pressure Rating of End Connections @ 100 °F (38 °C), psig (bar)	Orifice in. (mm)	Dimensions, in. (mm)					
	Connection 1/2/3	316 SS		A	B	C	X	Y	S
BP□□-ML6-10-3□	6 mm FITOK	10000 (690)	0.19 (4.8)	3.54 (90.0)	1.77 (45.0)	2.00 (51.0)	4.57 (116.0)	2.10 (53.4)	1.30 (32.0)
BP□□-ML8-10-3□	8 mm FITOK	7500 (517)	0.25 (6.4)	3.60 (91.6)	1.80 (45.8)	2.02 (51.3)			
BP□□-ML10-10-3□	10 mm FITOK	8400 (579)	0.31 (7.9)	3.70 (94.0)	1.85 (47.0)	2.07 (52.5)			
BP□□-ML12-10-3□	12 mm FITOK	6800 (469)	0.39 (10.0)	3.94 (100.0)	1.97 (50.0)	2.18 (55.5)			
BP□□-ML14-10-3□	14 mm FITOK	6200 (427)							
BP□□-FL4-10-3□	1/4" FITOK	10000 (690)	0.19 (4.8)	3.56 (90.4)	1.78 (45.2)	1.95 (49.5)			
BP□□-FL6-10-3□	3/8" FITOK	7500 (517)	0.28 (7.1)	3.72 (94.6)	1.86 (47.3)	2.16 (54.8)			
BP□□-FL8-10-3□	1/2" FITOK	6700 (462)	0.39 (10.0)	3.92 (99.6)	1.96 (49.8)	2.13 (54.0)			
BP□□-FNS4-10-3□	1/4 Female NPT	10000 (690)		3.03 (77.0)	1.52 (38.5)	1.44 (36.5)			
BP□□-FNS6-10-3□	3/8 Female NPT	10000 (690)		2.80 (71.0)	1.40 (35.5)	1.57 (40.0)			
BP□□-FNS8-10-3□	1/2 Female NPT	10000 (690)		3.27 (83.0)	1.63 (41.5)	1.83 (46.4)			
BP□□-NS4-10-3□	1/4 Male NPT	10000 (690)	0.28 (7.1)	3.36 (85.4)	1.68 (42.7)	1.90 (48.2)			
BP□□-NS6-10-3□	3/8 Male NPT	10000 (690)	0.39 (10.0)						
BP□□-NS8-10-3□	1/2 Male NPT	10000 (690)		3.75 (95.2)	1.88 (47.6)	2.09 (53.1)			

Basic Ordering Number	Connection Type and Size	Pressure Rating of End Connections @ 100°F (38°C), psig (bar)	Orifice in. (mm)	Dimensions, in. (mm)					
	Connection 1/2/3	316 SS		A	B	C	X	Y	S
BP□□-ML16-13-3□	16 mm FITOK	5800 (400)	0.50 (12.7)	4.42 (112.2)	2.21 (56.1)	2.60 (66.1)	5.59 (142.0)	2.54 (64.4)	1.50 (38.0)
BP□□-ML18-13-3□	18 mm FITOK	5400 (372)		4.12 (104.6)	2.06 (52.3)	2.45 (62.3)			
BP□□-ML20-13-3□	20 mm FITOK	5500 (379)		4.43 (112.6)	2.22 (56.3)	2.61 (66.3)			
BP□□-ML22-13-3□	22 mm FITOK	4900 (338)		4.29 (109.0)	2.15 (54.5)	2.54 (64.5)			
BP□□-FL10-13-3□	5/8" FITOK	6000 (414)		4.36 (110.6)	2.18 (55.3)	2.57 (65.3)			
BP□□-FL12-13-3□	3/4" FITOK	5800 (400)							
BP□□-FNS8-13-3□	1/2 Female NPT	6000 (414)		3.54 (90.0)	1.77 (45.0)	2.02 (51.2)			
BP□□-FNS12-13-3□	3/4 Female NPT	6000 (414)		4.09 (104.0)	2.05 (52.0)	2.44 (62.0)			
BP□□-NS12-13-3□	3/4 Male NPT	6000 (414)		4.14 (105.2)	2.07 (52.6)	2.46 (62.6)			
BP□□-ML20-19-3□	20 mm FITOK	5500 (379)	0.71 (18.0)	4.87 (123.8)	2.43 (61.9)	2.89 (73.4)	6.46 (164.0)	2.72 (69.0)	1.96 (50.0)
BP□□-ML22-19-3□	22 mm FITOK	4900 (338)							
BP□□-ML25-19-3□	25 mm FITOK	4600 (317)		5.11 (129.8)	2.66 (64.9)	3.00 (76.2)			
BP□□-FL12-19-3□	3/4" FITOK	5800 (400)		4.86 (123.4)	2.43 (61.7)	3.02 (76.7)			
BP□□-FL16-19-3□	1" FITOK	4700 (324)		5.11 (129.8)	2.66 (64.9)	2.85 (72.4)			
BP□□-FNS12-19-3□	3/4 Female NPT	6000 (414)		3.82 (97.0)	1.91 (48.5)	2.22 (56.5)			
BP□□-FNS16-19-3□	1 Female NPT	6000 (414)		4.26 (108.2)	2.13 (54.1)	2.72 (69.1)			
BP□□-NS12-19-3□	3/4 Male NPT	6000 (414)		4.54 (115.2)	2.27 (57.6)	2.72 (69.1)			
BP□□-NS16-19-3□	1 Male NPT	6000 (414)		4.91 (124.8)	2.45 (62.4)	2.90 (73.9)			

1. FITOK means FITOK double ferrule tube fittings.
2. Sizes and types listed are standard. Other sizes and types are available upon request, please contact FITOK Group or our authorized distributors.
3. Dimensions are shown with tube fitting nuts finger-tightened. All dimensions are for reference only and are subject to change.
   For dimensions not shown above, please contact FITOK Group or our authorized distributors.

Panel Mounting Options

Dimension for Panel Mounting

Orifice in. (mm)	in. (mm)			
	L1	L2	T1	T2
0.39 (10.0)	1.02 (26.0)	1.02 (26.0)	M4×0.7P deep 0.19 (5.0)	1.18 (30.0)
0.50 (12.7)	1.18 (30.0)	1.18 (30.0)	M5×0.8P deep 0.19 (5.0)	1.18 (30.0)
0.71 (18.0)	1.37 (35.0)	1.57 (40.0)	M5×0.8P deep 0.19 (5.0)	1.50 (38.0)

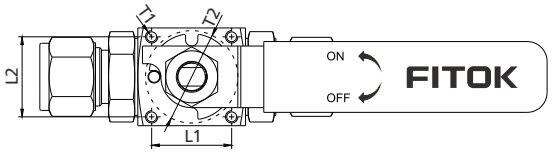

Top Panel Mounting

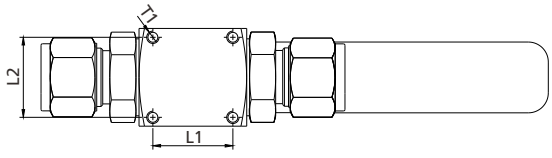

Bottom Panel Mounting

Seal Kits

Valve Orifice	Flow Pattern	Basic Seal Kit Ordering Number	Content
10	2-way	BPSS-□10-RK	Seat, upper packing, lower packing, O-ring, stem, ball, instructions
	3-way (vertical)	BPSS-□10-3-RK	
	3-way (horizontal)	BPSS-□10-3S-RK	
13	2-way	BPSS-□13-RK	
	3-way (vertical)	BPSS-□13-3-RK	
	3-way (horizontal)	BPSS-□13-3S-RK	
19	2-way	BPSS-□19-RK	
	3-way (vertical)	BPSS-□19-3-RK	
	3-way (horizontal)	BPSS-□19-3S-RK	

Seat Material	Designator
PVDF	-
PCTFE	K
PEEK	P

1. Seal kit components are the same materials and grades listed in materials of construction.
2. The default seat material in the seal kit for BP series valves is PVDF. To order seats with other materials, add a seat material designator to "□" in the basic seal kit ordering number to get a complete ordering number.
   Example: BPSS-10-RK
   BPSS-P10-RK
3. The listed basic seal kit ordering numbers specify 316 stainless steel material. To order kits with other materials, such as 304 stainless steel material, replace "SS" with "S4" in the ordering number.
   Example: BPS4-10-RK

Locking Device

◎ Locking Device 1 can lock BP series 2-way or 3-way valves , locking hole diameter is 0.23 in (6.0 mm);

◎ To order a ball valve with locking device 1, add -**L** to the valve ordering number.
Example: BPSS-FL4-10-**L**/BPSS-FL4-10-3**SL**/BPSS-FL4-10-3**L**

◎ Locking Device 2 can lock BP series 2-way or 3-way valves, locking hole diameters of valves with orifice 10 or 13 are 0.23 in (6.0 mm);

◎ To order a ball valve with locking device 2, add -**LK** to the valve ordering number.
Example: BPSS-FL4-10-**LK**/BPSS-FL4-10-3**SLK**

◎ When both top mounting holes and locking devices are present, only locking device 2 should be selected. When both bottom mounting holes and locking devices are present, either locking device may be selected.
Example: BPSS-FL4-10-MLK/BPSS-FL4-10-MDL/BPSS-FL4-10-MDLK

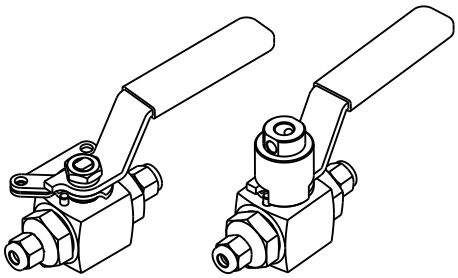

Diagram of Locking Device 1

Diagram of Locking Device 2

Ball Valve without Handle

Ball Valve without handle can be directly connected to the FITOK actuator assembly.
To order, please add -**AM** to the valve ordering number.
Example: BPSS-FL12-13-**AM**

Ordering Number Description

BPSS - ML20 - FL12 - FNS8 - P13 - OHQ3MLK - SCEF2

Series	Body Material	Connection 1 Type	Connection 1 Size	Connection 2/3 Type	Connection 2/3 Size	Seat Material	Orifice Size	Handle/Actuator	For Actuator	Flow Pattern	Panel Mounting	Locking Device	Special Application	Cleaning and Packaging
BP	SS 316 SS	FNS Female NPT	4 1/4" or 4 mm	Same as Connection 1		PVDF	10 Max. 0.39" (10.0 mm)	Yellow Handle Sleeve	None	Straight	None	No	None	FC-01
	S4 304 SS	NS Male NPT	6 3/8" or 6 mm	Specified in the same way as Connection 1 type and size		K PCTFE	13 0.50" (12.7 mm)	I Red Handle Sleeve	H Mechanical Limit Switch	3 3-Way (Vertical Pattern)	Without Panel Mounting	L Locking Device 1	S NACE MR0175	F2 FC-02
	S1 321 SS	FRT Female BSPT	8 1/2" or 8 mm			P PEEK	19 0.71" (18.0 mm)	J Blue Handle Sleeve	N Inductive Limit Switch	3S 3-Way (Horizontal Pattern)	M With Top Panel Mounting Holes	LK Locking Device 2	SI SilcoNert® 2000 (Sulfinert®) Coating	
		RT Male BSPT	10 5/8" or 10 mm					AM Without Handle	Q Solenoid Valve		MD With Bottom Panel Mounting Holes		CE CE Certification	
		FRP Female BSPP (for RP)	12 3/4" or 12 mm					C 90° Normally Closed Pneumatic Actuator	HQ Mechanical Limit Switch and Solenoid Valve					
		FL Fractional Tube Fitting	14 14 mm or M14 × 1.5					O 90° Normally Open Pneumatic Actuator	NQ Inductive Limit Switch and Solenoid Valve					
		ML Metric Tube Fitting	16 1" or 16 mm					D 90° Double Acting Pneumatic Actuator						
		UFB Rotatable Fractional Tube Butt Weld	18 18 mm					LX 180° Left End Normally Open Pneumatic Actuator						
		UMB Rotatable Metric Tube Butt Weld	20 20 mm or M20 × 1.5					RX 180° Right End Normally Open Pneumatic Actuator						
		UPB Nut + Gasket + Pipe Bulged Nipple	22 22 mm or M22 × 1.5					DX 180° Double Acting Pneumatic Actuator						
			25 25 mm					E 90° Electric Actuator						
			28 28 mm					EX 180° Electric Actuator						
			30 30 mm											
			32 32 mm											

1. Standard thread pitch for metric threads are as follows:
   M10 and below: 1 mm
   M12 to M24: 1.5 mm
   M27 and above: 2 mm
   Standard thread pitch should be omitted in the ordering number, others should be specified.
2. For oxygen-enriched environment or hazardous media service, contact FITOK Group or our authorized distributors.
3. Cleaning and Packaging:
   FC-01: Standard cleaning and packaging for general industrial procedures.
   FC-02: Special cleaning and packaging for wetted system components to ensure compliance with product cleanliness requirements of ASTM G93 Level C.
4. For more information about pneumatic actuator ball valves, please refer to the catalog Actuated Ball Valves.
5. SilcoNert® 2000 (Sulfinert®) Coating: Except for ball valves with PEEK seat, wetted metal components SilcoNert® 2000 (Sulfinert®) coated.
6. CE certification is available. For more information, please contact FITOK group or our authorized distributors.
7. The rated working pressure of BP series ball valves for "NACE MRO175" application is lower than that of standard valves. For detailed pressure values, please contact FITOK Group or our authorized distributors.

Note: "Ordering Number Description" is a reference to understand the combination rules of FITOK product part number. Not all combinations are available.

Hex Bar Stock Ball Valves

BR Series

Features



- ◎ Working pressure up to 1000 psig (69.0 bar)
- ◎ Working temperature: -20°F to 450°F (-28°C to 232°C)
- ◎ Compact and economical ball valve designed for industrial applications
- ◎ Blowout-proof stem minimizes the risk of valve failure due to stem displacement or loosening
- ◎ Free-floating ball design allows the ball to be pushed against the seat by fluid pressure, ensuring a tight and reliable seal
- ◎ Bidirectional flow
- ◎ Low-torque handle enables easy and smooth operation
- ◎ A variety of end connections available
- ◎ Handle color options available
- ◎ Each valve is tested for internal and external leakage using nitrogen or compressed air at rated working pressure before shipment

Pressure vs. Temperature

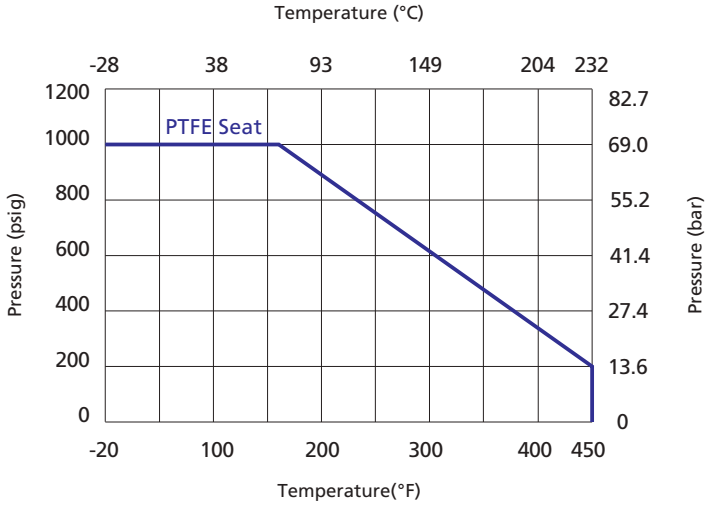

Standard Materials of Construction

Bar Stock Body

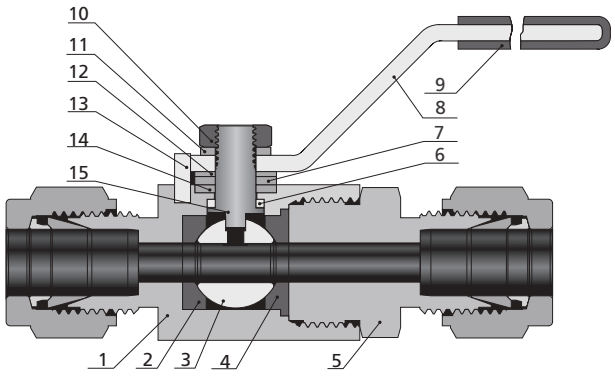

Handle Options

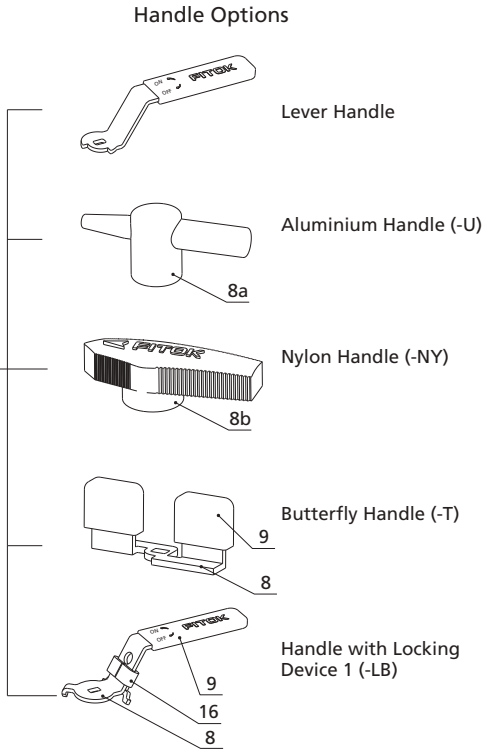

Item	Component	Material/Specification		
1	*Body*	*316 SS/A479*	*Alloy 400/B164*	*Brass C36000/B16*
2	*Front Seat*	*PTFE/D1710*		
3	*Ball*	*316 SS/A479*	*Alloy 400/B164*	*316 SS/A479*
4	*Back Seat*	*PTFE/D1710*		
5	*End Connection*	*316 SS/A479*	*Alloy 400/B164*	*Brass C36000/B16*
6	*Lower Packing*	*PTFE/D1710*		
7	Washer	316 SS/A479		
8	Handle	304 SS/A240		
8a		Aluminium		
8b		Nylon with 304 SS insert		
9	Sleeve	Vinyl ester		
10	Stem Nut	Stainless steel		
11	Gasket	Stainless steel		
12	Coned-disc Spring	S17700/A693		
13	Stop Pin①	Stainless steel		
14	*Upper Packing*	*PTFE/D1710*		
15	*Stem*	*316 SS/A479*	*Alloy 400/B164*	*316 SS/A479*
16	Lock Block	304 SS/A240		

Note: Wetted components are listed in italics.

① A handle with a locking device does not include a stop pin.

Cast Body (When the valve has a handle with locking device 2)

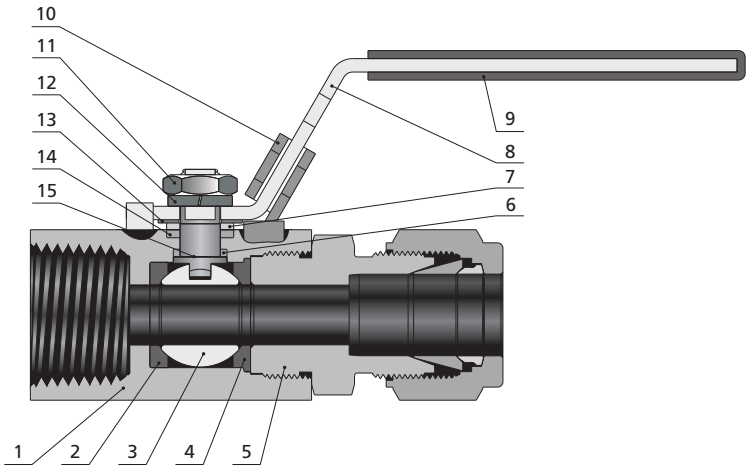

Item	Component	Material/Specification
1	*Body*	*CF8M/A351*
2	*Front Seat*	*PTFE/D1710*
3	*Ball*	*316 SS/A479*
4	*Back Seat*	*PTFE/D1710*
5	*End Connection*	*316 SS/A479*
6	*Lower Packing*	*PTFE/D1710*
7	Washer	316 SS/A479
8	Handle	304 SS/A240
9	Sleeve	Vinyl ester
10	Lock Block	304 SS/A240
11	Stem Nut	Stainless steel
12	Gasket	Stainless steel
13	Coned-disc Spring	S17700/A693
14	*Upper Packing*	*PTFE/D1710*
15	*Stem*	*316 SS/A479*

Notes: 1. Wetted components are listed in italics.

2. The standard models listed in this catalog feature a two-piece construction. However, due to the impact of connection types and orifice sizes, some models may have a three-piece construction. Please refer to the sales drawing for details.

Dimensions

Bar Stock Body

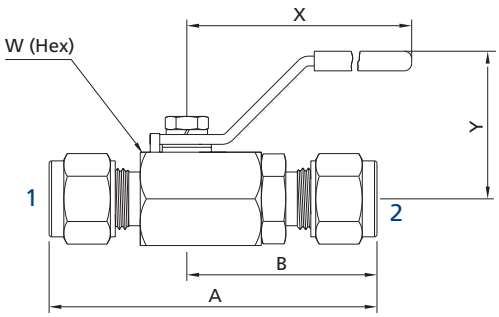

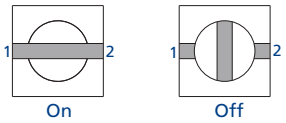

Basic Ordering Number	Connection Type and Size	Orifice in. (mm)	Cv	Dimensions, in. (mm)				
	Connection 1/2			A	B	W	X	Y
BR□□-ML6-05	6 mm FITOK	0.19 (4.8)	1.25	2.57 (65.2)	1.50 (38.1)	3/4 (19.05)	2.36 (60)	1.18 (30)
BR□□-ML8-05	8 mm FITOK			2.63 (66.8)	1.53 (38.8)			
BR□□-FL4-05	1/4" FITOK			2.57 (65.2)	1.50 (38.1)			
BR□□-FL5-05	5/16" FITOK			2.63 (66.8)	1.53 (38.8)			
BR□□-FNS2-05	1/8 Female NPT			1.85 (47.0)	1.08 (27.4)			
BR□□-FRP2-05	1/8 Female BSPP			2.00 (50.0)	1.14 (29.0)			
BR□□-FRP4-05	1/4 Female BSPP			2.00 (50.0)	1.14 (29.0)			
BR□□-FNS4-05	1/4 Female NPT			1.85 (47.0)	1.08 (27.4)			
BR□□-ML10-07	10 mm FITOK	0.28 (7.1)	2.50	2.87 (72.9)	1.68 (42.7)	7/8 (22.23)		1.26 (32)
BR□□-FL6-07	3/8" FITOK							
BR□□-FRP6-07	3/8 Female BSPP			2.03 (51.6)	1.18 (30.0)			
BR□□-FNS6-07	3/8 Female NPT							
BR□□-ML12-10	12 mm FITOK	0.35 (8.9)	5.30	3.15 (80.0)	1.83 (46.5)	1 1/16 (27.0)	3.15 (80)	1.54 (39)
BR□□-ML14-10	14 mm FITOK			3.24 (82.2)	1.87 (47.5)			
BR□□-FL8-10	1/2" FITOK			3.15 (80.0)	1.83 (46.5)			
BR□□-FL10-10	5/8" FITOK			3.24 (82.2)	1.87 (47.5)			
BR□□-FRP8-10	1/2 Female BSPP			2.08 (53.0)	1.12 (28.5)	15/16 (24.0)		
BR□□-FNS8-10	1/2 Female NPT			2.08 (53.0)	1.12 (28.5)			
BR□□-ML16-13	16 mm FITOK	0.47 (12.0)	8.60	3.50 (88.9)	2.00 (50.8)	1 1/4 (31.75)	3.94 (100)	2.03 (51.7)
BR□□-ML18-13	18 mm FITOK							
BR□□-FL12-13	3/4" FITOK							
BR□□-FRP12-13	3/4 Female BSPP			2.48 (63.0)	1.30 (33.0)			
BR□□-FNS12-13	3/4 Female NPT			2.39 (60.7)	1.20 (30.5)			
BR□□-ML22-16	22 mm FITOK	0.63 (16.0)	17.35	3.96 (100.6)	2.24 (56.8)	1 1/2 (38.1)		2.15 (54.8)
BR□□-ML25-16	25 mm FITOK			4.31 (109.5)	2.42 (61.5)			
BR□□-FL16-16	1" FITOK							
BR□□-FRP16-16	1 Female BSPP			3.25 (82.6)	1.63 (41.3)			
BR□□-FNS16-16	1 Female NPT			3.00 (76.5)	1.50 (38.1)			

1. FITOK means FITOK double ferrule tube fittings.
2. Sizes and types listed are standard. Other sizes and types are available upon request, please contact FITOK Group or our authorized distributors.
3. Dimensions are shown with FITOK tube fitting nuts finger-tightened. All dimensions are for reference only and are subject to change. For dimensions not shown above, please contact FITOK Group or our authorized distributors.

Cast Body

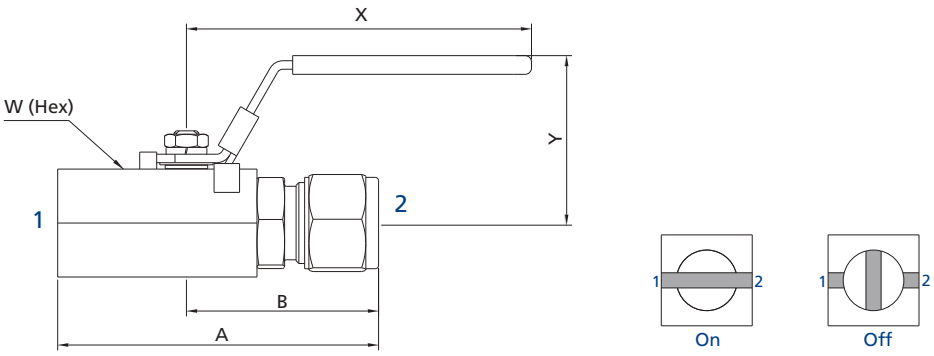

Basic Ordering Number	Connection Type and Size		Orifice in. (mm)	Cv	Dimensions, in. (mm)				
	Connection 1	Connection 2			A	B	W	X	Y
BRSS-FNS6-07-L	3/8" Female NPT	3/8" Female NPT	0.28 (7.1)	2.5	2.03 (51.6)	1.19 (30.1)	7/8 (22.23)	2.40 (61.2)	1.25 (31.8)
BRSS-FNS6-FL6-07-L	3/8" Female NPT	3/8" FITOK			2.53 (64.2)	1.68 (42.7)			
BRSS-FNS8-10-L	1/2" Female NPT	1/2" Female NPT	0.35 (8.9)	5.3	2.08 (52.8)	1.08 (27.5)	1 (25.4)	3.20 (81.2)	1.56 (39.6)
BRSS-FNS8-FL8-10-L	1/2" Female NPT	1/2" FITOK			2.78 (70.5)	1.78 (45.2)			
BRSS-FNS12-13-L	3/4" Female NPT	3/4" Female NPT	0.47 (12.0)	8.6	2.39 (60.6)	1.21 (30.6)	1 1/4 (31.75)	3.80 (96.4)	1.93 (48.9)
BRSS-FNS12-FL12-13-L	3/4" Female NPT	3/4" FITOK			3.19 (80.9)	2.00 (50.9)			
BRSS-FNS16-16-L	1" Female NPT	1" Female NPT	0.63 (16.0)	17.35	3.78 (96)	2.28 (57.8)	1 1/2 (38.1)		2.05 (52.1)
BRSS-FNS16-FL16-16-L	1" Female NPT	1" FITOK			3.92 (99.6)	2.42 (61.4)			

1. FITOK means FITOK double ferrule tube fittings.
2. Sizes and types listed are standard. Other sizes and types are available upon request, please contact FITOK Group or our authorized distributors.
3. Dimensions are shown with FITOK tube fitting nuts finger-tightened. All dimensions are for reference only and are subject to change. For dimensions not shown above, please contact FITOK Group or our authorized distributors.

Locking Device

Locking Device 1 (-LB)

Body Material	Orifice	Locking Hole Diameter in. (mm)	Example
A variety of optional materials (bar stock)	05	0.19 (4.8)	BRSS-ML12-10-LB
	07		
	10	0.24 (6.2)	
	13		
	16		

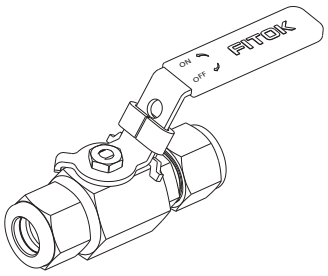

Locking Device 1

Locking Device 2 (-L)

Body Material	Orifice	Locking Hole Diameter in. (mm)	Example
CF8M (cast)	07	0.19 (4.8)	BRSS-FNS8-10-L
	10		
	13	0.22 (5.7)	
	16		

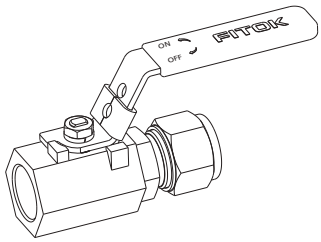

Locking Device 2

Note: The locking device is only applicable to lever handles. For other handle types requiring a locking device, please contact FITOK Group or our authorized distributors.

Seal Kits

Valve Orifice	Basic Seal Kit Ordering Number	Content
05	BRSS-05-RK	Front seat, back seat, ball, lower packing, upper packing, instructions
07	BRSS-07-RK	
10	BRSS-10-RK	
13	BRSS-13-RK	
16	BRSS-16-RK	

1. Seal kit components are the same materials and grades listed in materials of construction.
2. The listed basic seal kit ordering numbers specify 316 stainless steel material. To order kits with other materials, such as 304 stainless steel material, replace "SS" with "S4" in the ordering number.
   Example: BRS4-05-RK

Ordering Number Description

BRSS – ML8 – FL4 – 05 – JL – SF2

Series	Body Material	Connection 1 Type	Connection 1 Size	Connection 2 Type	Connection 2 Size	Orifice	Handle	Locking Device	Special Application	Cleaning and Packaging
BR	SS 316 SS or CF8M 6L 316L SS S4 304 SS M Alloy 400 B Brass	FNS Female NPT NS Male NPT FRT Female BSPT RT Male BSPT FRP Female BSPP (for RP) BP Male BSPP (for RG) FL Fractional Tube Fitting ML Metric Tube Fitting UFB Rotatable Fractional Tube Butt Weld UMB Rotatable Metric Tube Butt Weld UPB Rotatable Pipe Butt Weld	2 1/8" 4 1/4" 5 5/16" 6 3/8" or 6 mm 8 1/2" or 8 mm 10 10 mm 12 3/4" or 12 mm 14 14 mm or M14 × 1.5 16 1" or 16 mm 18 18 mm 20 1 1/4" or 20 mm or M20 × 1.5 22 22 mm or M22 × 1.5 25 25 mm	Same as connection 1 Specified in the same way as connection 1 type and size	Same as connection 1 Specified in the same way as connection 1 type and size	05 0.19" (4.8 mm) 07 0.28" (7.1 mm) 10 0.35" (8.9 mm) 13 0.47" (12.0 mm) 16 0.63" (16.0 mm)	I Lever Handle with Red Handle Sleeve J Lever Handle with Blue Handle Sleeve U Black Aluminium Handle NY Black Nylon Handle T Butterfly Handle with Yellow Handle Sleeve TI Butterfly Handle with Red Handle Sleeve TJ Butterfly Handle with Blue Handle Sleeve	No LB Locking Device 1 L Locking Device 2 Note: Locking device only applies to lever handle.	None S NACE MR0175 SI SilcoNert® 2000 (Sulfinert®) Coating	FC-01 F2 FC-02

Note: "Ordering Number Description" is a reference to understand the combination rules of FITOK product part number. Not all combinations are available.

1. Standard thread pitch for metric threads are as follows:
   M10 and below: 1 mm
   M12 to M24: 1.5 mm
   M27 and above: 2 mm
   Standard thread pitch should be omitted in the ordering number, others should be specified.
2. For oxygen-enriched environment or hazardous media service, contact FITOK Group or our authorized distributors.
3. Cleaning and Packaging:
   FC-01: Standard cleaning and packaging for general industrial procedures.
   FC-02: Special cleaning and packaging for wetted system components to ensure compliance with product cleaning requirement of ASTM G93 Level C.
4. SilcoNert® 2000 (Sulfinert®) Coating: Wetted metal components SilcoNert® 2000 (Sulfinert®) coated.

Hex Bar Stock Ball Valves

BRC Series

Features



- Working pressure up to 2000 psig (138 bar)
- Working temperature: -65°F to 400°F (-54°C to 204°C)
- Compact and economical ball valve designed for industrial applications
- Blowout-proof stem minimizes the risk of valve failure due to stem displacement or loosening
- Free-floating ball design allows the ball to be pushed against the seat by fluid pressure, ensuring a tight and reliable seal
- Bidirectional flow
- Low-torque handle enables easy and smooth operation
- A variety of end connections available
- Handle color options available
- Each valve is tested for internal and external leakage using nitrogen or compressed air at rated working pressure before shipment

Pressure vs. Temperature

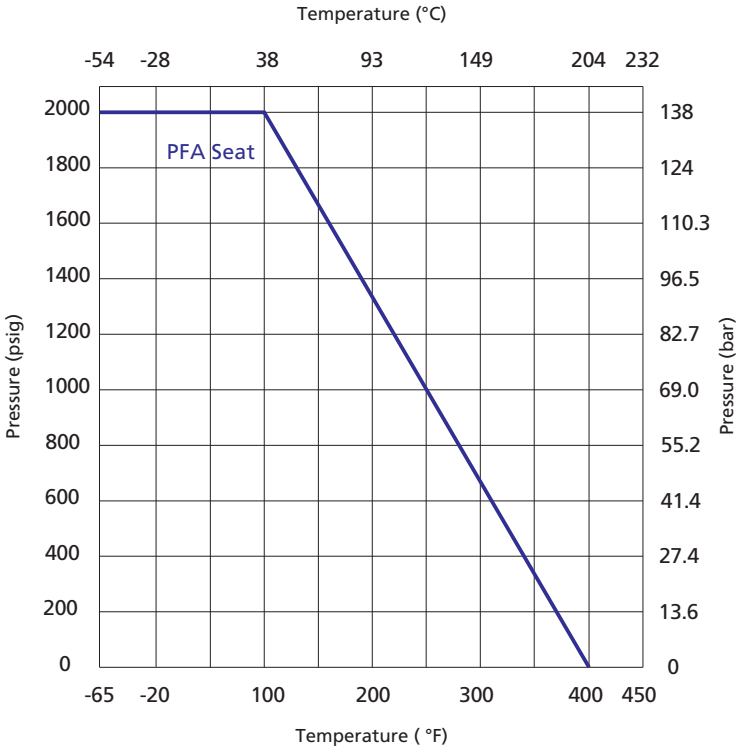

Standard Materials of Construction

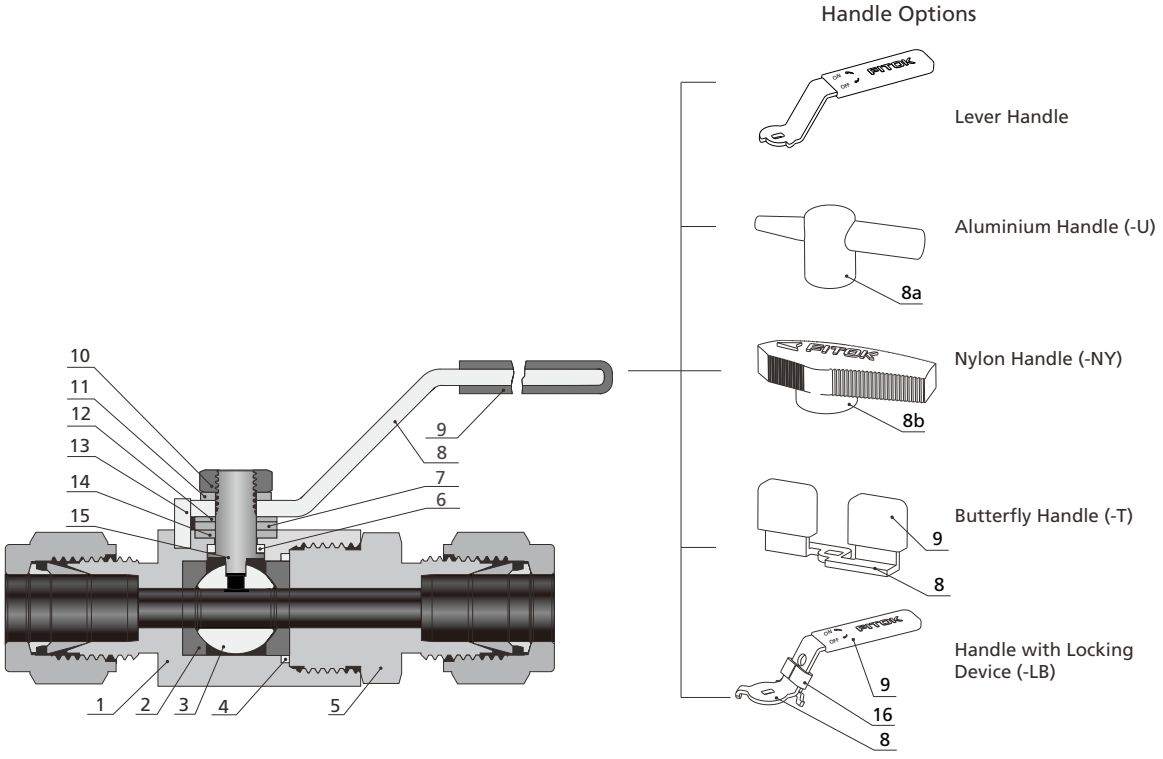

Item	Component	Material/Specification	
1	*Body*	*316 SS/A479*	*Alloy 400/B164*
2	*Seat*	*RPTFE*	
3	*Ball*	*316 SS/A479*	*Alloy 400/B164*
4	*Sealing Gasket*	*316L SS/A269*	*Alloy 400/B164*
5	*End Connection*	*316 SS/A479*	*Alloy 400/B164*
6	*Lower Packing*	*PTFE/D1710*	
7	*Washer*	*316 SS/A479*	
8	Handle	304 SS/A240	
8a		Aluminium	
8b		Nylon with 304 SS insert	
9	Sleeve	Vinyl ester	
10	Stem Nut	Stainless steel	
11	Gasket	Stainless steel	
12	Coned-disc Spring	S17700/A693	
13	Stop Pin①	Stainless steel	
14	*Upper Packing*	*RPTFE*	
15	*Stem*	*316 SS/A479*	*Alloy 400/B164*
16	Lock Block	304 SS/A240	

Note: Wetted components are listed in italics.

① A handle with a locking device does not include a stop pin.

Dimensions

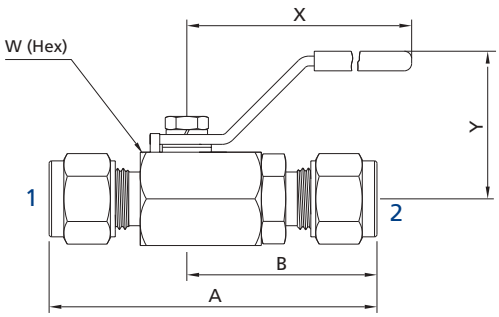

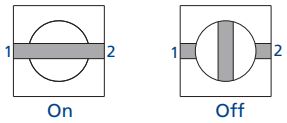

Basic Ordering Number	Connection Type and Size	Orifice in. (mm)	Cv	Dimensions, in. (mm)				
	Connection 1/2			A	B	W	X	Y
BRC□□-ML6-05	6 mm FITOK	0.19 (4.8)	1.25	2.57 (65.2)	1.50 (38.1)	3/4 (19.05)	2.36 (60)	1.18 (30)
BRC□□-ML8-05	8 mm FITOK			2.63 (66.8)	1.53 (38.8)			
BRC□□-FL4-05	1/4" FITOK			2.57 (65.2)	1.50 (38.1)			
BRC□□-FL5-05	5/16" FITOK			2.63 (66.8)	1.53 (38.8)			
BRC□□-FNS2-05	1/8 Female NPT			1.85 (47.0)	1.08 (27.4)			
BRC□□-FRP2-05	1/8 Female BSPP			2.00 (50.0)	1.14 (29.0)			
BRC□□-FRP4-05	1/4 Female BSPP			2.00 (50.0)	1.14 (29.0)			
BRC□□-FNS4-05	1/4 Female NPT			1.85 (47.0)	1.08 (27.4)			
BRC□□-ML10-07	10 mm FITOK	0.28 (7.1)	2.50	2.87 (72.9)	1.68 (42.7)	7/8 (22.23)		1.26 (32)
BRC□□-FL6-07	3/8" FITOK							
BRC□□-FRP6-07	3/8 Female BSPP			2.03 (51.6)	1.18 (30.0)			
BRC□□-FNS6-07	3/8 Female NPT							
BRC□□-ML12-10	12 mm FITOK	0.35 (8.9)	5.30	3.15 (80.0)	1.83 (46.5)	1 1/16 (27.0)	3.15 (80)	1.54 (39)
BRC□□-ML14-10	14 mm FITOK			3.24 (82.2)	1.87 (47.5)			
BRC□□-FL8-10	1/2" FITOK			3.15 (80.0)	1.83 (46.5)			
BRC□□-FL10-10	5/8" FITOK			3.24 (82.2)	1.87 (47.5)			
BRC□□-FRP8-10	1/2 Female BSPP			2.08 (53.0)	1.12 (28.5)	15/16 (24.0)		
BRC□□-FNS8-10	1/2 Female NPT			2.08 (53.0)	1.12 (28.5)			
BRC□□-ML16-13	16 mm FITOK	0.47 (12.0)	8.60	3.50 (88.9)	2.00 (50.8)	1 1/4 (31.75)	3.94 (100)	2.03 (51.7)
BRC□□-ML18-13	18 mm FITOK							
BRC□□-FL12-13	3/4" FITOK							
BRC□□-FRP12-13	3/4 Female BSPP			3.13 (79.5)	1.95 (49.5)			
BRC□□-FNS12-13	3/4 Female NPT			3.13 (79.5)	1.95 (49.5)			
BRC□□-ML22-16	22 mm FITOK	0.63 (16.0)	17.35	3.96 (100.6)	2.24 (56.8)	1 1/2 (38.1)		2.15 (54.8)
BRC□□-ML25-16	25 mm FITOK			4.31 (109.5)	2.42 (61.5)			
BRC□□-FL16-16	1" FITOK							
BRC□□-FRP16-16	1 Female BSPP			3.68 (93.4)	2.14 (54.3)			
BRC□□-FNS16-16	1 Female NPT			3.43 (87.1)	2.01 (51.1)			

1. FITOK means FITOK double ferrule tube fittings.
2. Sizes and types listed are standard. Other sizes and types are available upon request, please contact FITOK Group or our authorized distributors.
3. Dimensions are shown with FITOK tube fitting nuts finger-tightened. All dimensions are for reference only and are subject to change. For dimensions not shown above, please contact FITOK Group or our authorized distributors.

O-Ring Stem Packing Ball Valves

◎ Suitable for applications where adjusting the packing during valve operation is inconvenient.

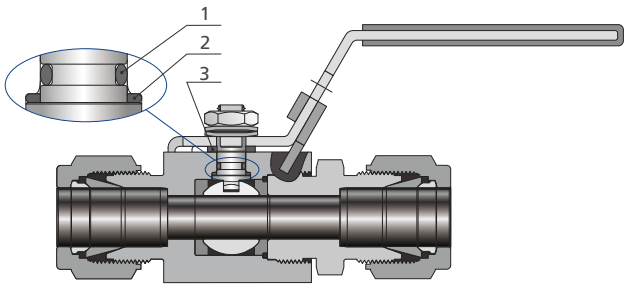

Materials of Construction

Item	Component	Material/Specification
1	*O-ring*	*Fluorocarbon FKM/EPDM/Buna N/FFKM*
2	*Lower Packing*	*PEEK*
2	Seal	PTFE

Wetted components are listed in italics.
Other components are consistent with standard materials of construction.

Temperature Range

Stem Packing Material	Designator	Temperature Range °F (°C)
Fluorocarbon FKM	*VI*	*5 ~ 400 (-15 ~ 204)*
EPDM	*E*	*-40 ~ 250 (-40 ~ 121)*
Buna N	*B*	*0 ~ 250 (-17 ~ 121)*
FFKM	*Z*	*14 ~ 400 (-10 ~ 204)*

Ordering Information

◎ To order an O-ring upper seal ball valve, add the suffix VI to the standard part number.
Example: BRCSS-ML12-10VI

Locking Device

Locking Device (-LB)

Body Material	Orifice	Locking Hole Diameter in. (mm)	Example
A variety of optional materials (bar stock)	05	0.19 (4.8)	BRCSS-ML12-10-LB
	07		
	10	0.24 (6.2)	
	13		
	16		

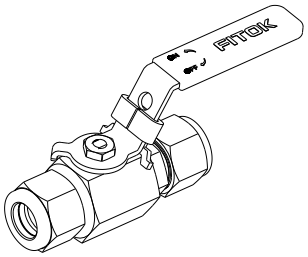

Locking Device

Note: The locking device is only applicable to lever handles. For other handle types requiring a locking device, please contact FITOK Group or our authorized distributors.

Seal Kits

Valve Orifice	Basic Seal Kit Ordering Number	Content
05	BRCSS-05-RK	Seat, sealing gasket, ball, lower packing, upper packing, instructions
07	BRCSS-07-RK	
10	BRCSS-10-RK	
13	BRCSS-13-RK	
16	BRCSS-16-RK	

1. Seal kit components are the same materials and grades listed in materials of construction.
2. The listed basic seal kit ordering numbers specify 316 stainless steel material. To order kits with other materials, such as 304 stainless steel material, replace "SS" with "S4" in the ordering number.
   Example: BRCS4-05-RK

Ordering Number Description

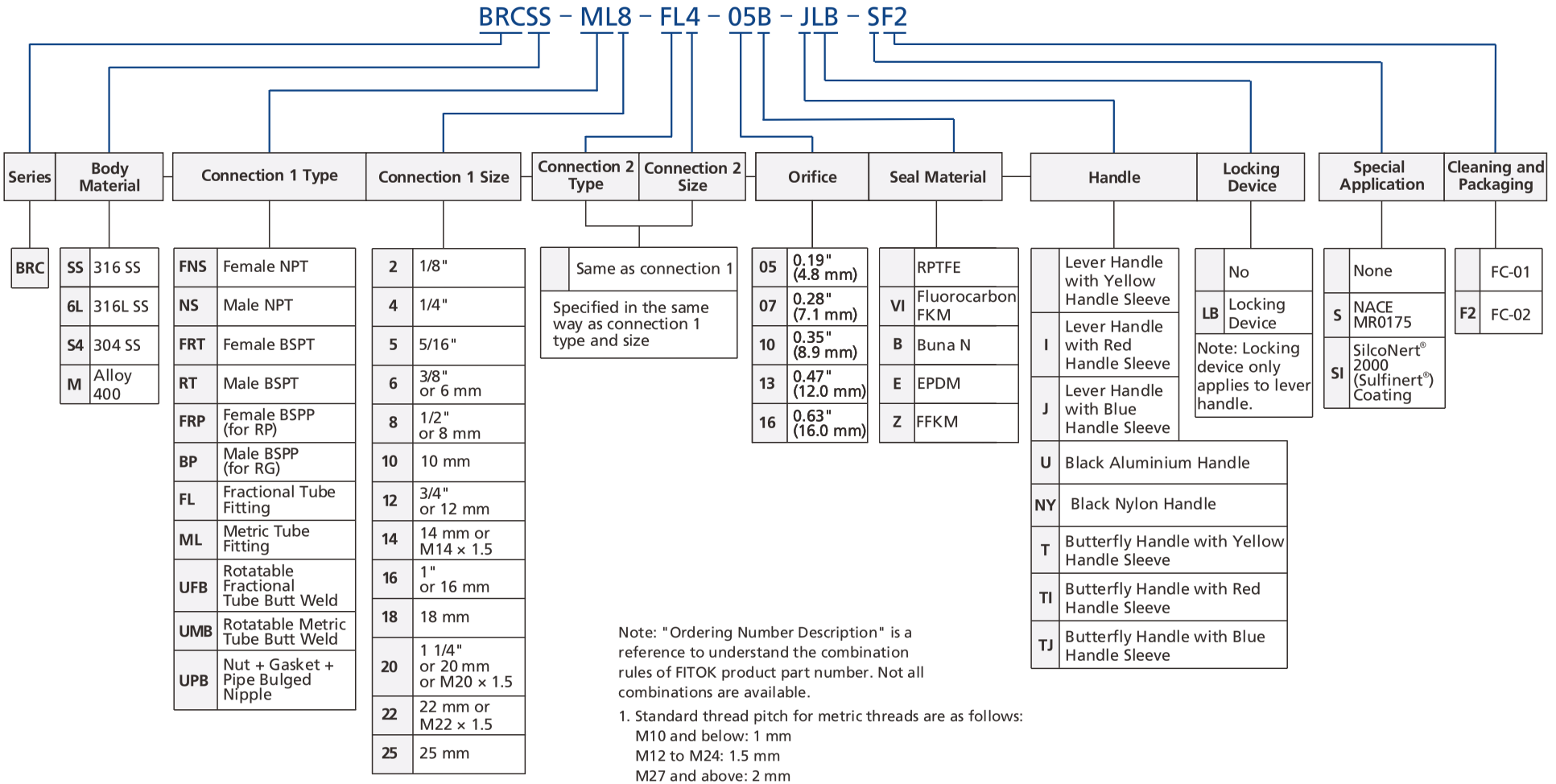

Note: "Ordering Number Description" is a reference to understand the combination rules of FITOK product part number. Not all combinations are available.

1. Standard thread pitch for metric threads are as follows:
   M10 and below: 1 mm
   M12 to M24: 1.5 mm
   M27 and above: 2 mm
   Standard thread pitch should be omitted in the ordering number, others should be specified.
2. For oxygen-enriched environment or hazardous media service, contact FITOK Group or our authorized distributors.
3. Cleaning and Packaging:
   FC-01: Standard cleaning and packaging for general industrial procedures.
   FC-02: Special cleaning and packaging for wetted system components to ensure compliance with product cleaning requirement of ASTM G93 Level C.
4. SilcoNert® 2000 (Sulfinert®) Coating: Wetted metal components SilcoNert® 2000 (Sulfinert®) coated.

High Performance Ball Valves

BV Series

Features

- ◎ Working pressure up to: 6000 psig (414 bar)
- ◎ Working temperature: -65°F to 450°F (-54°C to 232°C)
- ◎ Low operating torque
- ◎ Handle as indicator of flow direction
- ◎ Positive handle stop
- ◎ Electric and pneumatic actuator available
- ◎ Handle color options available
- ◎ Leak-tight performance testing with nitrogen or compressed air for every valve to meet the requirement of no visible leakage at the rated pressure
- ◎ Bidirectional flow for straight valves
- ◎ The inlet of 3-way valves and angle pattern valves can only be the bottom port



Pressure vs. Temperature

316 SS Body

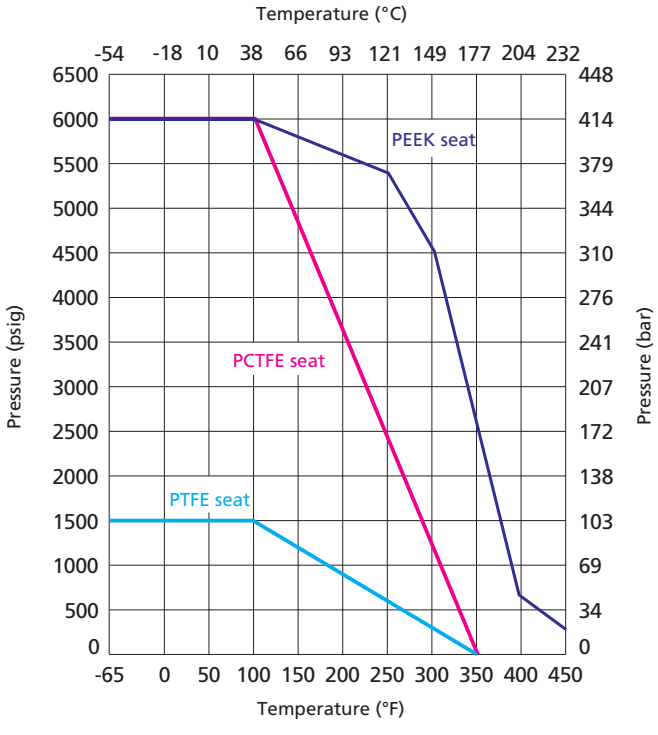

Brass Body

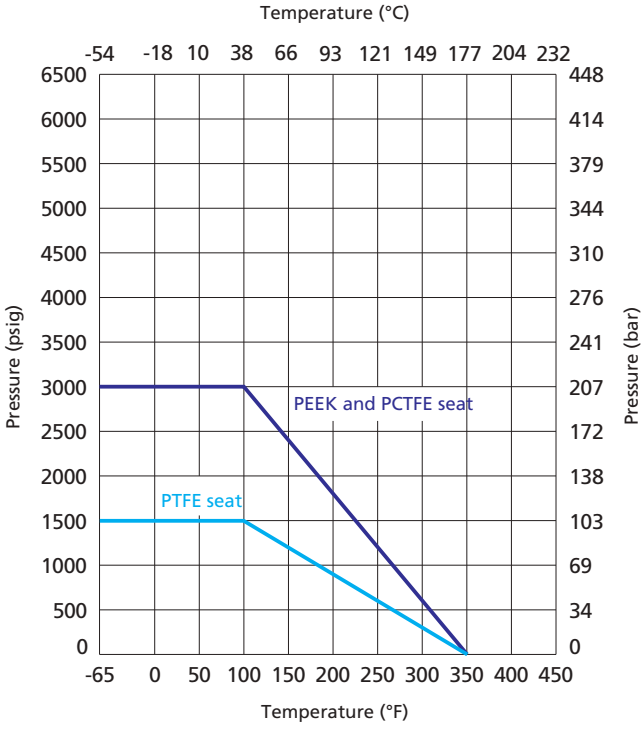

Note: The working pressure of valves is restricted by materials of the valve body and seat, as well as end connections. When choosing a valve for your applications, please refer to the above Temperature vs. Pressure Curves and the pressure rating in the dimension table. The minimum value shall be the pressure rating of the valve.

Standard Materials of Construction

Straight Valves

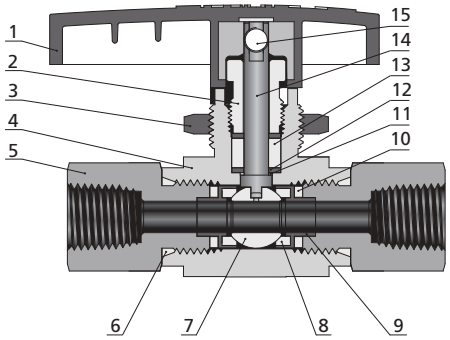

Item	Component	Valve Body Material	
		SS	Brass
1	Handle	Nylon or Aluminium	
2	Packing Nut	316 SS/A479	C36000/B16
3	Panel Nut	316 SS/A479	
4	*Body*	*CF8M/A351*	*C37700/B283*
5	*End Connection*	*316 SS/A479*	*C36000/B16*
6	*Connection Ring*	*PTFE*	
7	*Ball*	*316 SS/A479*	
8	*Seat*	*PTFE or PCTFE or PEEK*	
9	*Seat Retainer*	*316 SS/A479*	
10	*Seat Packing*	*PTFE*	
11	*Stem Back-up Ring*	*PEEK*	
12	*Stem Washer*	*316/A479*	
13	*Stem Packing*	*PTFE*	
14	*Stem*	*316 SS/A479*	
15	Set Screw	Zinc-plated carbon steel	
	Lubricants	*Fluorinated-based*	

Note: Wetted components are listed in italics.
For other materials, please contact FITOK Group or our authorized distributors.

3-way Valves

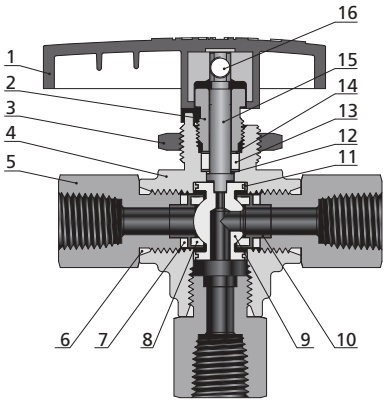

Item	Component	Valve Body Material	
		SS	Brass
1	Handle	Nylon or Aluminium	
2	Packing Nut	316 SS/A479	C36000/B16
3	Panel Nut	316 SS/A479	
4	*Body*	*CF8M/A351*	*C37700/B283*
5	*End Connection*	*316 SS/A479*	*C36000/B16*
6	*Connection Ring*	*PTFE*	
7	*Seat Packing*	*PTFE*	
8	*Seat*	*PTFE or PCTFE or PEEK*	
9	*Ball*	*316 SS/A479*	
10	*Seat Retainer*	*316 SS/A479*	
11	*Trunnion Bearing*	*PEEK*	
12	*Stem Back-up Ring*	*PEEK*	
13	*Stem Packing*	*PTFE*	
14	*Stem Washer*	*316 SS/A479*	
15	*Stem*	*316 SS/A479*	
16	Set Screw	Zinc-plated carbon steel	
	Lubricants	*Fluorinated-based*	

Note: Wetted components are listed in italics.
For other materials, please contact FITOK Group or our authorized distributors.

Angle Pattern Valves

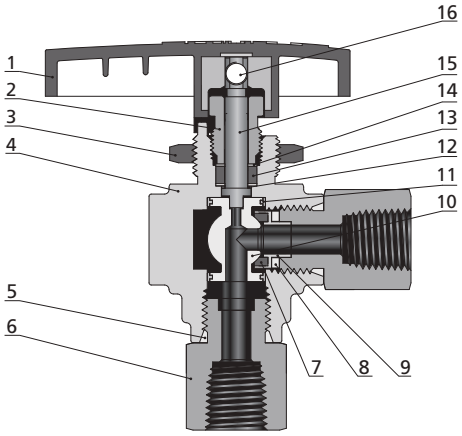

Item	Component	Valve Body Material	
		SS	Brass
1	Handle	Nylon or Aluminium	
2	Packing Nut	316 SS/A479	C36000/B16
3	Panel Nut	316 SS/A479	
4	*Body*	*CF8M/A351*	*C37700/B283*
5	*Connection Ring*	*PTFE*	
6	*End Connection*	*316 SS/A479*	*C36000/B16*
7	*Seat*	*PTFE or PCTFE or PEEK*	
8	*Seat Packing*	*PTFE*	
9	*Seat Retainer*	*316 SS/A479*	
10	*Ball*	*316 SS/A479*	
11	*Trunnion Bearing*	*PEEK*	
12	*Stem Back-up Ring*	*PEEK*	
13	*Stem Packing*	*PTFE*	
14	*Stem Washer*	*316 SS/A479*	
15	*Stem*	*316 SS/A479*	
16	*Set Screw*	*Zinc-plated carbon Steel*	
	Lubricants	*Fluorinated-based*	

Note: Wetted components are listed in italics.
For other materials, please contact FITOK Group or our authorized distributors.

Dimensions

Straight Valves

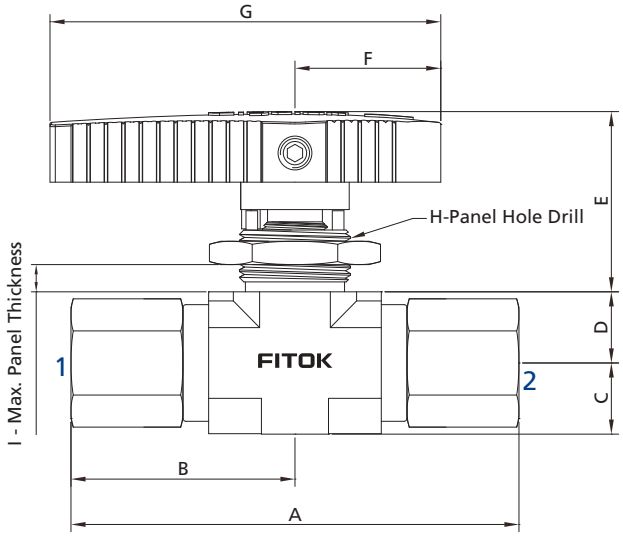

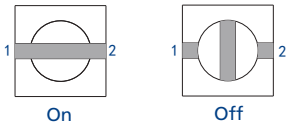

Basic Ordering Number	Connection Type and Size	Pressure Rating of End Connections @ 100°F (38°C) psig (bar)		Orifice in. (mm)	Cv	Dimensions, in. (mm)								
	Connection 1/2	316 SS	Brass			A	B	C	D	E	F	G	H	I
BV□□-FL1-01	1/16" FITOK	6000 (414)	3000 (207)	0.05 (1.3)	0.06	2.60 (66.0)	1.30 (33.0)	0.36 (9.2)	0.33 (8.5)	0.94 (23.9)	0.79 (20.0)	1.97 (50.0)	0.58 (14.7)	0.18 (4.6)
BV□□-FL2-02	1/8" FITOK	6000 (414)	3000 (207)	0.09 (2.4)	0.21	2.72 (69.0)	1.36 (34.5)							
BV□□-ML3-02	3 mm FITOK	6000 (414)	3000 (207)			2.74 (69.6)	1.37 (34.8)							
BV□□-FRT2-04	1/8 Female BSPT	6000 (414)	3000 (207)	0.17 (4.2)	0.93	2.14 (54.4)	1.07 (27.2)							
BV□□-FRP2-04	1/8 Female BSPP	6000 (414)	3000 (207)											
BV□□-FNS2-04	1/8 Female NPT	6000 (414)	3000 (207)											
BV□□-RT2-04	1/8 Male BSPT	6000 (414)	3000 (207)			2.36 (60.0)	1.18 (30.0)							
BV□□-BP2-04	1/8 Male BSPP	6000 (414)	3000 (207)											
BV□□-NS2-04	1/8 Male NPT	6000 (414)	3000 (207)											
BV□□-RT4-04	1/4 Male BSPT	6000 (414)	3000 (207)			2.70 (68.6)	1.35 (34.3)							
BV□□-BP4-04	1/4 Male BSPP	6000 (414)	3000 (207)											
BV□□-NS4-04	1/4 Male NPT	6000 (414)	3000 (207)											
BV□□-FL4-05	1/4" FITOK	6000 (414)	3000 (207)	0.19 (4.7)	1.04	3.48 (88.4)	1.74 (44.2)	0.48 (12.2)	0.48 (12.2)	1.24 (31.5)	0.59 (25.0)	2.64 (67.0)	0.77 (19.6)	0.25 (6.4)
BV□□-ML6-05	6 mm FITOK	6000 (414)	3000 (207)			3.50 (89.0)	1.75 (44.5)							
BV□□-FL6-06	3/8" FITOK	6000 (414)	2200 (152)	0.25 (6.4)	2.34	3.60 (91.4)	1.80 (45.7)							
BV□□-ML8-06	8 mm FITOK	6000 (414)	2300 (159)			3.56 (90.4)	1.78 (45.2)							
BV□□-ML10-06	10 mm FITOK	6000 (414)	1900 (131)			3.62 (92.0)	1.81 (46.0)							
BV□□-FRT4-06	1/4 Female BSPT	6000 (414)	3000 (207)			3.02 (76.8)	1.51 (38.4)							
BV□□-FRP4-06	1/4 Female BSPP	6000 (414)	3000 (207)											
BV□□-FNS4-06	1/4 Female NPT	6000 (414)	3000 (207)											
BV□□-RT4-06	1/4 Male BSPT	6000 (414)	3000 (207)			3.24 (82.2)	1.62 (41.1)							
BV□□-BP4-06	1/4 Male BSPP	6000 (414)	3000 (207)											
BV□□-NS4-06	1/4 Male NPT	6000 (414)	3000 (207)											
BV□□-RT6-06	3/8 Male BSPT	6000 (414)	3000 (207)											
BV□□-BP6-06	3/8 Male BSPP	6000 (414)	3000 (207)											
BV□□-NS6-06	3/8 Male NPT	6000 (414)	3000 (207)											
BV□□-FL8-10	1/2" FITOK	6000 (414)	2100 (145)	0.41 (10.3)	6.42	4.68 (118.8)	2.34 (59.4)	0.75 (19.0)	0.71 (18.0)	1.54 (39.0)	1.42 (36.0)	3.78 (96.0)	0.90 (22.9)	0.38 (9.7)
BV□□-FL12-10	3/4" FITOK	5800 (400)	1800 (124)			4.66 (118.4)	2.33 (59.2)							
BV□□-ML12-10	12 mm FITOK	6000 (414)	2000 (138)	0.37 (9.5)	5.57									
BV□□-ML14-10	14 mm FITOK	6000 (414)	1900 (131)	0.41 (10.3)	6.42									
BV□□-ML16-10	16 mm FITOK	5800 (400)	1700 (117)											
BV□□-ML18-10	18 mm FITOK	5400 (372)	1600 (110)											
BV□□-ML20-10	20 mm FITOK	5500 (379)	1600 (110)			4.84 (123.0)	2.42 (61.5)							
BV□□-ML22-10	22 mm FITOK	4900 (338)	1450 (100)											
BV□□-FRT6-10	3/8 Female BSPT	6000 (414)	3000 (207)			3.90 (99.0)	1.95 (49.5)							
BV□□-FRP6-10	3/8 Female BSPP	6000 (414)	3000 (207)											
BV□□-FNS6-10	3/8 Female NPT	6000 (414)	3000 (207)											
BV□□-FRT8-10	1/2 Female BSPT	6000 (414)	3000 (207)			4.30 (109.2)	2.15 (54.6)							
BV□□-FRP8-10	1/2 Female BSPP	6000 (414)	3000 (207)			3.97 (101.0)	1.99 (50.5)							
BV□□-FNS8-10	1/2 Female NPT	6000 (414)	3000 (207)			4.30 (109.2)	2.15 (54.6)							
BV□□-FRT12-10	3/4 Female BSPT	6000 (414)	3000 (207)			4.50 (114.2)	2.25 (57.1)							
BV□□-FRP12-10	3/4 Female BSPP	6000 (414)	3000 (207)											
BV□□-FNS12-10	3/4 Female NPT	6000 (414)	3000 (207)											
BV□□-RT8-10	1/2 Male BSPT	6000 (414)	3000 (207			4.44 (112.8)	2.22 (56.4)							
BV□□-BP8-10	1/2 Male BSPP	6000 (414)	3000 (207)											
BV□□-NS8-10	1/2 Male NPT	6000 (414)	3000 (207)											
BV□□-RT12-10	3/4 Male BSPT	6000 (414)	3000 (207)											
BV□□-BP12-10	3/4 Male BSPP	6000 (414)	3000 (207)											
BV□□-NS12-10	3/4 Male NPT	6000 (414)	3000 (207)											

3-way Valves

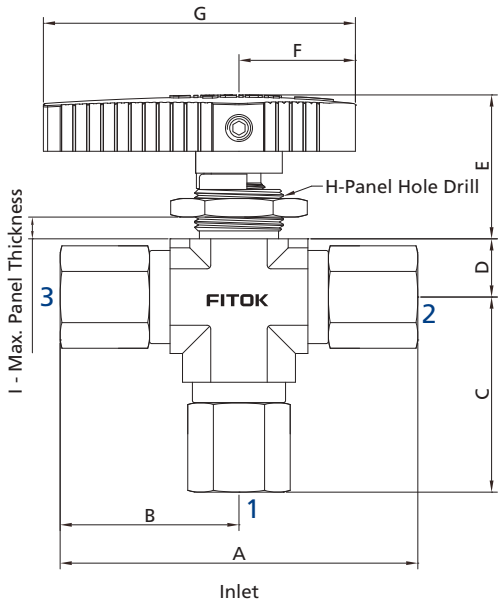



Port 1 to port 2



Port 1 to port 3

Basic Ordering Number	Connection Type and Size	Pressure Rating of End Connections @ 100°F (38°C), psig (bar)		Orifice in. (mm)	Cv	Dimensions, in. (mm)								
	Connection 1/2/3	316 SS	Brass			A	B	C	D	E	F	G	H	I
BV□□-FL1-01-3	1/16" FITOK	6000 (414)	3000 (207)	0.05 (1.3)	0.06	2.60 (66.0)	1.30 (33.0)	1.35 (34.3)	0.33 (8.5)	0.94 (23.9)	0.79 (20.0)	1.97 (50.0)	0.58 (14.7)	0.18 (4.6)
BV□□-FL2-02-3	1/8" FITOK	6000 (414)	3000 (207)	0.09 (2.4)	0.21	2.72 (69.0)	1.36 (34.5)	1.41 (35.8)						
BV□□-ML3-02-3	3 mm FITOK	6000 (414)	3000 (207)			2.74 (69.6)	1.37 (34.8)	1.42 (36.1)						
BV□□-FRT2-04-3	1/8 Female BSPT	6000 (414)	3000 (207)	0.12 (3.0)	0.28	2.14 (54.4)	1.07 (27.2)	1.12 (28.5)						
BV□□-FRP2-04-3	1/8 Female BSPP	6000 (414)	3000 (207)											
BV□□-FNS2-04-3	1/8 Female NPT	6000 (414)	3000 (207)			2.36 (60.0)	1.18 (30.0)	1.23 (31.3)						
BV□□-RT2-04-3	1/8 Male BSPT	6000 (414)	3000 (207)											
BV□□-BP2-04-3	1/8 Male BSPP	6000 (414)	3000 (207)											
BV□□-NS2-04-3	1/8 Male NPT	6000 (414)	3000 (207)											
BV□□-RT4-04-3	1/4 Male BSPT	6000 (414)	3000 (207)			2.70 (68.6)	1.35 (34.3)	1.40 (35.6)						
BV□□-BP4-04-3	1/4 Male BSPP	6000 (414)	3000 (207)											
BV□□-NS4-04-3	1/4 Male NPT	6000 (414)	3000 (207)											
BV□□-FL4-05-3	1/4" FITOK	6000 (414)	3000 (207)	0.19 (4.7)	0.70	3.48 (88.4)	1.74 (44.2)	1.88 (47.7)	0.48 (12.2)	1.24 (31.5)	0.59 (25.0)	2.64 (67.0)	0.77 (19.6)	0.25 (6.4)
BV□□-ML6-05-3	6 mm FITOK	6000 (414)	3000 (207)			3.50 (89.0)	1.75 (44.5)	1.89 (48.0)						
BV□□-FL6-05-3	3/8" FITOK	6000 (414)	3000 (207)			3.60 (91.4)	1.80 (45.7)	1.94 (49.2)						
BV□□-ML8-05-3	8 mm FITOK	6000 (414)	3000 (207)			3.56 (90.4)	1.78 (45.2)	1.92 (48.7)						
BV□□-ML10-05-3	10 mm FITOK	6000 (414)	3000 (207)			3.62 (92.0)	1.81 (46.0)	1.95 (49.5)						
BV□□-FRT4-05-3	1/4 Female BSPT	6000 (414)	3000 (207)			3.02 (76.8)	1.51 (38.4)	1.65 (41.9)						
BV□□-FRP4-05-3	1/4 Female BSPP	6000 (414)	3000 (207)											
BV□□-FNS4-05-3	1/4 Female NPT	6000 (414)	3000 (207)											
BV□□-RT4-05-3	1/4 Male BSPT	6000 (414)	3000 (207)			3.24 (82.2)	1.62 (41.1)	1.76 (44.6)						
Bv□□-BP4-05-3	1/4 Male BSPP	6000 (414)	3000 (207)											
BV□□-NS4-05-3	1/4 Male NPT	6000 (414)	3000 (207)											
BV□□-RT6-05-3	3/8 Male BSPT	6000 (414)	3000 (207)											
BV□□-BP6-05-3	3/8 Male BSPP	6000 (414)	3000 (207)											
BV□□-NS6-05-3	3/8 Male NPT	6000 (414)	3000 (207)											

Basic Ordering Number	Connection Type and Size	Pressure Rating of End Connections @ 100°F (38°C), psig (bar)		Orifice in. (mm)	Cv	Dimensions, in. (mm)								
	Connection 1/2/3	316 SS	Brass			A	B	C	D	E	F	G	H	I
BV□□-FL8-10-3	1/2" FITOK	6000 (414)	2100 (145)	0.37 (9.5)	3.48	4.68 (118.8)	2.34 (59.4)	2.68 (68.1)	0.71 (18.0)	1.54 (39.0)	1.42 (36.0)	3.78 (96.0)	0.90 (22.9)	0.38 (9.7)
BV□□-FL12-10-3	3/4" FITOK	5800 (400)	1800 (124)			4.66(118.4)	2.33 (59.2)	2.67 (67.9)						
BV□□-ML12-10-3	12 mm FITOK	6000 (414)	2000 (138)											
BV□□-ML14-10-3	14 mm FITOK	6000 (414)	1900 (131)											
BV□□-ML16-10-3	16 mm FITOK	5800 (400)	1700 (117)											
BV□□-ML18-10-3	18 mm FITOK	5400 (372)	1600 (110)											
BV□□-ML20-10-3	20 mm FITOK	5500 (379)	1600 (110)			4.84 (123.0)	2.42 (61.5)	2.76 (70.2)						
BV□□-ML22-10-3	22 mm FITOK	4900 (338)	1450 (100)											
BV□□-FRT6-10-3	3/8 Female BSPT	6000 (414)	3000 (207)			3.90 (99.0)	1.95 (49.5)	2.29 (58.2)						
BV□□-FRP6-10-3	3/8 Female BSPP	6000 (414)	3000 (207)											
BV□□-FNS6-10-3	3/8 Female NPT	6000 (414)	3000 (207)											
BV□□-FRT8-10-3	1/2 Female BSPT	6000 (414)	3000 (207)			4.30 (109.2)	2.15 (54.6)	2.49 (63.3)						
BV□□-FRP8-10-3	1/2 Female BSPP	6000 (414)	3000 (207)			3.97 (101.0)	1.99 (50.5)	2.33 (59.1)						
BV□□-FNS8-10-3	1/2 Female NPT	6000 (414)	3000 (207)			4.30 (109.2)	2.15 (54.6)	2.49 (63.3)						
BV□□-FRT12-10-3	3/4 Female BSPT	6000 (414)	3000 (207)			4.50 (114.2)	2.25 (57.1)	2.59 (65.8)						
BV□□-FRP12-10-3	3/4 Female BSPP	6000 (414)	3000 (207)											
BV□□-FNS12-10-3	3/4 Female NPT	6000 (414)	3000 (207)											
BV□□-RT8-10-3	1/2 Male BSPT	6000 (414)	3000 (207)			4.44 (112.8)	2.22 (56.4)	2.56 (65.1)						
BV□□-BP8-10-3	1/2 Male BSPP	6000 (414)	3000 (207)											
BV□□-NS8-10-3	1/2 Male NPT	6000 (414)	3000 (207)											
BV□□-RT12-10-3	3/4 Male BSPT	6000 (414)	3000 (207)											
BV□□-BP12-10-3	3/4 Male BSPP	6000 (414)	3000 (207)											
BV□□-NS12-10-3	3/4 Male NPT	6000 (414)	3000 (207)											

Angle Pattern Valves

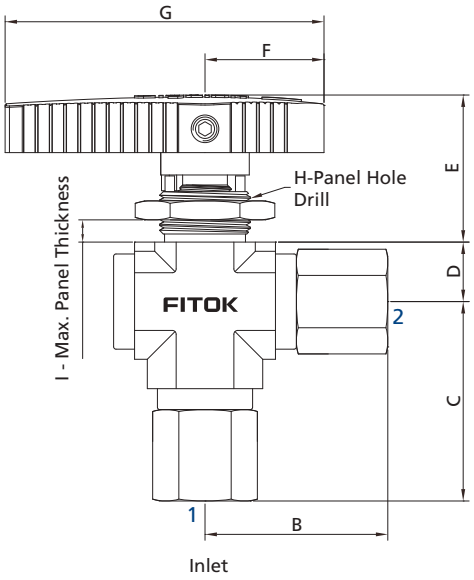

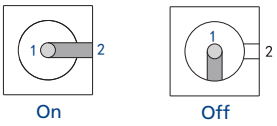

Basic Ordering Number	Connection Type and Size	Pressure Rating of End Connections @ 100°F (38°C), psig (bar)		Orifice in. (mm)	Cv	Dimensions, in. (mm)							
	Connection 1/2	316 SS	Brass			B	C	D	E	F	G	H	I
BV□□-FL1-01-A	1/16" FITOK	6000 (414)	3000 (207)	0.05 (1.3)	0.06	1.30 (33.0)	1.35 (34.3)	0.33 (8.5)	0.94 (23.9)	0.79 (20.0)	1.97 (50.0)	0.58 (14.7)	0.18 (4.6)
BV□□-FL2-02-A	1/8" FITOK	6000 (414)	3000 (207)	0.09 (2.4)	0.21	1.36 (34.5)	1.41 (35.8)						
BV□□-ML3-02-A	3 mm FITOK	6000 (414)	3000 (207)			1.37 (34.8)	1.42 (36.1)						
BV□□-FRT2-04-A	1/8 Female BSPT	6000 (414)	3000 (207)	0.12 (3.0)	0.28	1.07 (27.2)	1.12 (28.5)						
BV□□-FRP2-04-A	1/8 Female BSPP	6000 (414)	3000 (207)										
BV□□-FNS2-04-A	1/8 Female NPT	6000 (414)	3000 (207)			1.18 (30.0)	1.23 (31.3)						
BV□□-RT2-04-A	1/8 Male BSPT	6000 (414)	3000 (207)										
BV□□-BP2-04-A	1/8 Male BSPP	6000 (414)	3000 (207)										
BV□□-NS2-04-A	1/8 Male NPT	6000 (414)	3000 (207)										
BV□□-RT4-04-A	1/4 Male BSPT	6000 (414)	3000 (207)			1.35 (34.3)	1.40 (35.6)						
BV□□-BP4-04-A	1/4 Male BSPP	6000 (414)	3000 (207)										
BV□□-NS4-04-A	1/4 Male NPT	6000 (414)	3000 (207)										
BV□□-FL4-05-A	1/4" FITOK	6000 (414)	3000 (207)	0.19 (4.7)	0.70	1.74 (44.2)	1.88 (47.7)	0.48 (12.2)	1.24 (31.5)	0.59 (25.0)	2.64 (67.0)	0.77 (19.6)	0.25 (6.4)
BV□□-ML6-05-A	6 mm FITOK	6000 (414)	3000 (207)			1.75 (44.5)	1.89 (48.0)						
BV□□-FL6-05-A	3/8" FITOK	6000 (414)	2200 (152)			1.80 (45.7)	1.94 (49.2)						
BV□□-ML8-05-A	8 mm FITOK	6000 (414)	2300 (159)			1.78 (45.2)	1.92 (48.7)						
BV□□-ML10-05-A	10 mm FITOK	6000 (414)	1900 (131)			1.81 (46.0)	1.95 (49.5)						
BV□□-FRT4-05-A	1/4 Female BSPT	6000 (414)	3000 (207)			1.51 (38.4)	1.65 (41.9)						
BV□□-FRP4-05-A	1/4 Female BSPP	6000 (414)	3000 (207)										
BV□□-FNS4-05-A	1/4 Female NPT	6000 (414)	3000 (207)										
BV□□-RT4-05-A	1/4 Male BSPT	6000 (414)	3000 (207)			1.62 (41.1)	1.76 (44.6)						
Bv□□-BP4-05-A	1/4 Male BSPP	6000 (414)	3000 (207)										
BV□□-NS4-05-A	1/4 Male NPT	6000 (414)	3000 (207)										
BV□□-RT6-05-A	3/8 Male BSPT	6000 (414)	3000 (207)										
BV□□-BP6-05-A	3/8 Male BSPP	6000 (414)	3000 (207)										
BV□□-NS6-05-A	3/8 Male NPT	6000 (414)	3000 (207)										

Basic Ordering Number	Connection Type and Size	Pressure Rating of End Connections @ 100°F (38°C), psig (bar)		Orifice in. (mm)	Cv	Dimensions, in. (mm)							
	Connection 1/2	316 SS	Brass			B	C	D	E	F	G	H	I
BV□□-FL8-10-A	1/2" FITOK	6000 (414)	2100 (145)	0.37 (9.5)	3.48	2.34(59.4)	2.68(68.1)	0.71 (18.0)	1.54 (39.0)	1.42 (36.0)	3.78 (96.0)	0.90 (22.9)	0.38 (9.7)
BV□□-FL12-10-A	3/4" FITOK	5800 (400)	1800 (124)			2.33 (59.2)	2.67 (67.9)						
BV□□-ML12-10-A	12 mm FITOK	6000 (414)	2000 (138)										
BV□□-ML14-10-A	14 mm FITOK	6000 (414)	1900 (131)										
BV□□-ML16-10-A	16 mm FITOK	5800 (400)	1700 (117)										
BV□□-ML18-10-A	18 mm FITOK	5400 (372)	1600 (110)										
BV□□-ML20-10-A	20 mm FITOK	5500 (379)	1600 (110)			2.42 (61.5)	2.76 (70.2)						
BV□□-ML22-10-A	22 mm FITOK	4900 (338)	1450 (100)										
BV□□-FRT6-10-A	3/8 Female BSPT	6000 (414)	3000 (207)			1.95 (49.5)	2.29 (58.2)						
BV□□-FRP6-10-A	3/8 Female BSPP	6000 (414)	3000 (207)										
BV□□-FNS6-10-A	3/8 Female NPT	6000 (414)	3000 (207)										
BV□□-FRT8-10-A	1/2 Female BSPT	6000 (414)	3000 (207)			2.15 (54.6)	2.49 (63.3)						
BV□□-FRP8-10-A	1/2 Female BSPP	6000 (414)	3000 (207)			1.99 (50.5)	2.33 (59.1)						
BV□□-FNS8-10-A	1/2 Female NPT	6000 (414)	3000 (207)			2.15 (54.6)	2.49 (63.3)						
BV□□-FRT12-10-A	3/4 Female BSPT	6000 (414)	3000 (207)			2.25 (57.1)	2.59 (65.8)						
BV□□-FRP12-10-A	3/4 Female BSPP	6000 (414)	3000 (207)										
BV□□-FNS12-10-A	3/4 Female NPT	6000 (414)	3000 (207)										
BV□□-RT8-10-A	1/2 Male BSPT	6000 (414)	3000 (207)			2.22 (56.4)	2.56 (65.1)						
BV□□-BP8-10-A	1/2 Male BSPP	6000 (414)	3000 (207)										
BV□□-NS8-10-A	1/2 Male NPT	6000 (414)	3000 (207)										
BV□□-RT12-10-A	3/4 Male BSPT	6000 (414)	3000 (207)										
BV□□-BP12-10-A	3/4 Male BSPP	6000 (414)	3000 (207)										
BV□□-NS12-10-A	3/4 Male NPT	6000 (414)	3000 (207)										

1. FITOK means FITOK double ferrule tube fittings.
2. Sizes and types listed are standard. Other sizes and types are available upon request, please contact FITOK Group or our authorized distributors.
3. Dimensions are shown with tube fitting nuts finger-tightened. All dimensions are for reference only and are subject to change.
   For dimensions not shown above, please contact FITOK Group or our authorized distributors.

Locking Device

Locking Device 1

◎ Locks BV series 2-way or 3-way valves, featuring a locking hole diameter of 0.21 in (5.2 mm).
◎ To order a ball valve with Locking Device 1, add - **L** to the valve ordering number.
Example: BVSS-ML12-10- **L**/BVSS-ML12-10-3- **L**



Locking Device 1

Locking Device 2

◎ Locks BV series 2-way or 3-way valves, featuring different locking hole diameters:
0.21 in (5.2 mm) for valves with orifice designators 05 and 06
0.34 in (8.7 mm) for valves with orifice designator 10
◎ To order a ball valve with Locking Device 2, add - **LP** to the valve ordering number.
Example: BVSS-ML12-10-**LP**/BVSS-ML12-10-3-**LP**
◎ No impact on panel mounting.
◎ Locking device kits are also available for individual purchase to add locking functionality to your existing standard manual ball valves, with ordering information as follows:



Locking Device 2

Locking Device 2 Kits

Name	Valve Orifice	Locking Hole Diameter	Kit Ordering Number	Content
Locking Device Kits	05, 06	0.21 in (5.2 mm)	BVS4-06-LP-RK	Upper lock plate, lower lock plate
	10	0.34 in (8.7 mm)	BVS4-10-LP-RK	

Ball Valve without Handle

◎ Ball Valve without handle can be directly connected to the FITOK actuator assembly.
◎ To order, please add -**AM** to the valve ordering number.
Example: BVSS-FL4-05-**AM**

Ordering Number Description

BVSS - FL8 - ML12 - ML10 - P06 - RXHQ3 - L - SCEF2

Series	Body Material	Connection 1 Type	Connection 1 Size	Connection 2/3 Type	Connection 2/3 Size	Seat Material	Orifice Size	Handle/ Actuator	For Actuator	Flow Pattern	Locking Device	Special Application	Cleaning and Packaging

Series

BV	

Body Material

SS	CF8M
6L	CF3M
S4	CF8
B	Brass

Connection 1 Type

FNS	Female NPT
NS	Male NPT
FRT	Female BSPT
RT	Male BSPT
FMS	Female Metric Thread (for RG-M)
MS	Male Metric Thread (for RG-M)
FRP	Female BSPP (For RP)
BP	Male BSPP (For RG)
FL	Fractional Tube Fitting
ML	Metric Tube Fitting
UFB	Rotatable Fractional Tube Butt Weld
UMB	Rotatable Metric Tube Butt Weld
UPB	Rotatable Pipe Butt Weld

Connection 1 Size

2	1/8"
3	3 mm
4	1/4"
5	5/16"
6	3/8" or 6 mm or M6 × 1
8	1/2" or 8 mm
10	10 mm or M10 × 1
12	3/4" or 12 mm
14	14 mm or M14 × 1.5
16	16 mm
18	18 mm
20	20 mm or M20 × 1.5
22	22 mm or M22 × 1.5
24	M24 × 1.5

Connection 2/3 Type

	Same as Connection 1

Specified in the same way as Connection 1 type and size

Connection 2/3 Size

	PTFE
K	PCTFE
P	PEEK

Seat Material

02	0.09" (2.4 mm)
03	0.13" (3.2 mm)
04	0.17" (4.2 mm)
05	0.19" (4.7 mm)
06	0.25" (6.4 mm)
10	0.41" (10.3 mm)

Orifice Size

	Black Nylon Handle
I	Red Nylon Handle
GR	Green Nylon Handle
J	Blue Nylon Handle
Y	Yellow Nylon Handle
U	Black Aluminium Handle
AM	Without Handle
C	90° Normally Closed Pneumatic Actuator
O	90° Normally Open Pneumatic Actuator
D	90° Double Acting Pneumatic Actuator
LX	180° Left End Normally Open Pneumatic Actuator
RX	180° Right End Normally Open Pneumatic Actuator
DX	180° Double Acting Pneumatic Actuator
E	90° Electric Actuator
EX	180° Electric Actuator

Handle/ Actuator

	None
H	Mechanical Limit Switch
N	Inductive Limit Switch
Q	Solenoid Valve
HQ	Mechanical Limit Switch and Solenoid Valve
NQ	Inductive Limit Switch and Solenoid Valve

For Actuator

	Straight
A	Angle (Bottom Port Inlet)
3	3-Way (Diverter Valve)

Flow Pattern

	No
L	Locking Device 1
LP	Locking Device 2

Locking Device

	None
S	NACE MR0175
SI	SilcoNert® 2000 (Sulfinert®) Coating
CE	CE Certification

Special Application

	FC-01
F2	FC-02

Cleaning and Packaging

Note: "Ordering Number Description" is a reference to understand the combination rules of FITOK product part number. Not all combinations are available.

1. Standard thread pitch for metric threads are as follows:
   M10 and below: 1 mm
   M12 to M24: 1.5 mm
   Standard thread pitch should be omitted in the ordering number, others should be specified.
2. For oxygen-enriched environment or hazardous media service, contact FITOK Group or our authorized distributors.
3. Cleaning and Packaging:
   FC-01: Standard cleaning and packaging for general industrial procedures.
   FC-02: Special cleaning and packaging for wetted system components to ensure compliance with product cleaning requirement of ASTM G93 Level C.
4. For more information about pneumatic actuator ball valves, please refer to the catalog Actuated Ball Valves.
5. SilcoNert® 2000 (Sulfinert®) Coating: Except for ball valves with PEEK seat, wetted metal components SilcoNert® 2000 (Sulfinert®) coated.
6. CE certification is available. For more information, please contact FITOK group or our authorized distributors

High Temperature Metal-Seated Ball Valves

BK Series

Features

- Applied for high temperature and high viscosity liquid medium, not recommended for use in high temperature gas or low viscosity liquid medium
- 3-piece precision cast body construction
- Free floating ball design provides seat wear compensation
- Ball and seats mate-lapped for 100% contact ensures absolute shutoff
- High temperature resistant sealing materials for thermal service up to 662°F (350°C)
- Blowout-proof stem
- Positive handle stop
- Orifice sizes: 0.5" (12.7 mm), 1" (25.4 mm), 1.5" (38.1 mm)
- Variety of end connections
- Test Standard: Low pressure gas tightness FCI 70-2 Class VI
  High pressure liquid test ISO 5208 Rate D



Technical Data

Orifice, in. (mm)	0.5 (12.7), 1 (25.4), 1.5 (38.1)	
Material	316/304 SS	
Connection Type	FITOK Tube Fitting	Weld Fitting
Temperature, °F (°C)	-65 (-54) to 662 (350)	
Working Pressure, psig (bar)	1000 (69)	

Standard Materials of Construction

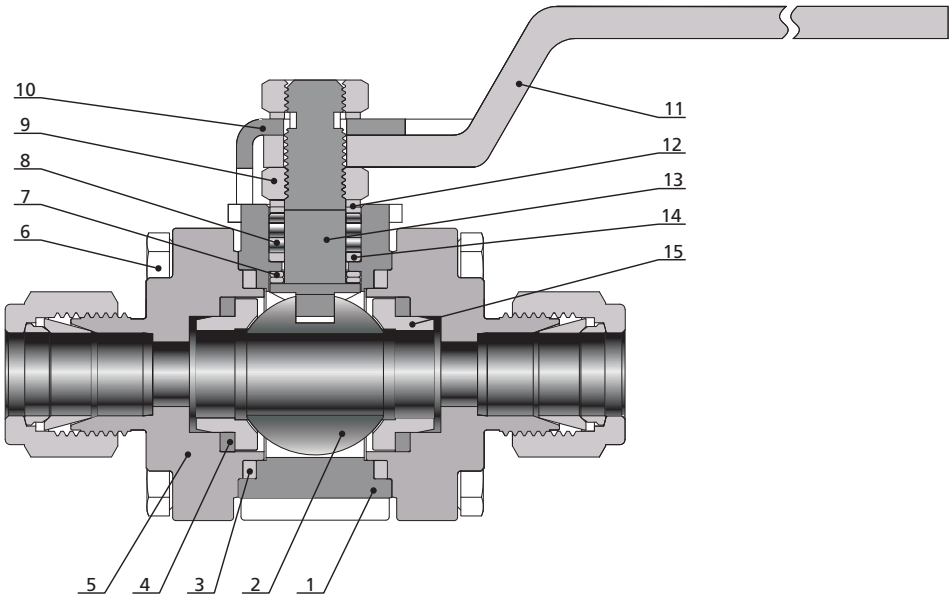

Item	Component	Material	
1	*Body*	*CF8M/A351*	*CF8/A351*
2	*Ball*	*316/304 SS, HVOF-sprayed WC coatings*	
3	*Flange Seal*	*Graphite*	
4	*Seat Packing*	*Graphite*	
5	*End Connection*	*CF8M/A351*	*CF8/A351*
6	Hex Bolt	Stainless Steel	
7	*Stem Bearing*	*Stellite 6/AMS5387*	
8	*Packing*	*Graphite*	
9	Hex Nut	316 SS/A479	
10	Stop Plate	304 SS/A240	
11	Handle	304 SS/A240	
12	Stem Spring	Strain-hardened 316 SS/A240	
13	*Stem*	*316 SS/A479*	
14	*Stem Washer*	*316 SS /A479*	
15	*Seat*	*316 SS/A479, hardfacing stellite*	*304 SS/A479, hardfacing stellite*

Note: Wetted components are listed in italics. For other materials, please contact FITOK Group or our authorized distributors.

Dimensions

Dimensions are for reference only and are subject to change.

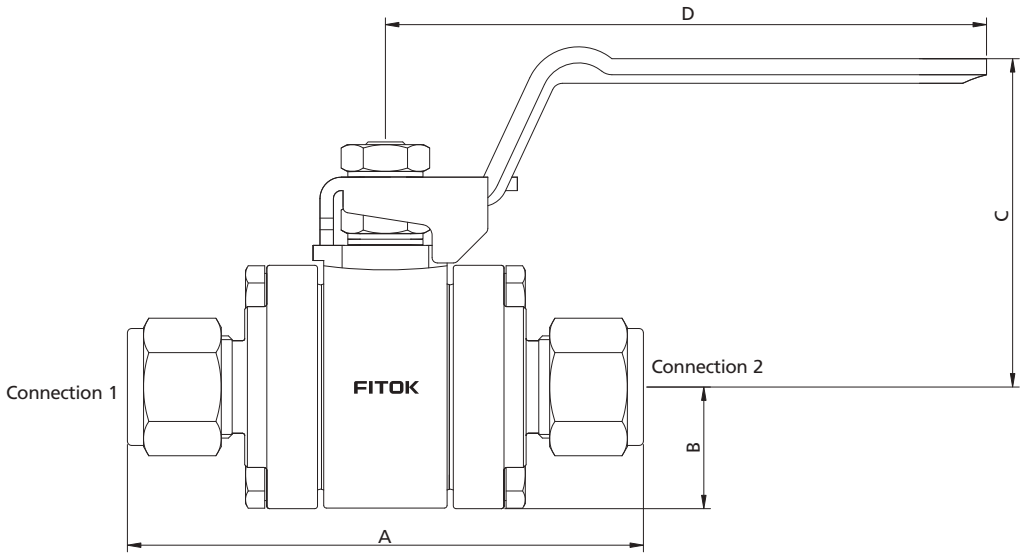

Basic Ordering Information	Connection Type		Orifice in. (mm)	Dimensions, in. (mm)			
	Connection 1	Connection 2		A	B	C	D
BK□□-FL8-13G	1/2" FITOK	1/2" FITOK	0.41 (10.4)	3.79 (96.2)	0.89 (22.7)	2.25 (57.1)	6.5 (165)
BK□□-FL10-13G	5/8" FITOK	5/8" FITOK	0.5 (12.7)	3.79 (96.2)	0.89 (22.7)	2.25 (57.1)	6.5 (165)
BK□□-FL12-13G	3/4" FITOK	3/4" FITOK		3.92 (99.6)	0.89 (22.7)	2.25 (57.1)	6.5 (165)
BK□□-ML16-13G	16 mm FITOK	16 mm FITOK		3.92 (99.6)	0.89 (22.7)	2.25 (57.1)	6.5 (165)
BK□□-ML18-13G	18 mm FITOK	18 mm FITOK		3.91 (99.4)	0.89 (22.7)	2.25 (57.1)	6.5 (165)
BK□□-TB12-13G	3/4"×0.120" Tube Butt Weld	3/4"×0.120" Tube Butt Weld		3.8 (96.6)	0.89 (22.7)	2.25 (57.1)	6.5 (165)
BK□□-TS12-13G	3/4" Tube Socket Weld	3/4" Tube Socket Weld		3.2 (80.2)	0.89 (22.7)	2.25 (57.1)	6.5 (165)
BK□□-PB8-13G	1/2×SCH80 Pipe Butt Weld	1/2×SCH80 Pipe Butt Weld		3.24 (82.34)	0.89 (22.7)	2.25 (57.1)	6.5 (165)
BK□□-PB12-13G	3/4×SCH80 Pipe Butt Weld	3/4×SCH80 Pipe Butt Weld		3.24 (82.34)	0.89 (22.7)	2.25 (57.1)	6.5 (165)
BK□□-TB24-25G	1 1/2"×0.197" Tube Butt Weld	1 1/2"×0.197" Tube Butt Weld	1 (25.4)	——	——	——	——
BK□□-TS20-25G	1 1/4" Tube Socket Weld	1 1/4" Tube Socket Weld		——	——	——	——
BK□□-PB20-25G	1 1/4×SCH80 Pipe Butt Weld	1 1/4×SCH80 Pipe Butt Weld		——	——	——	——
BK□□-TB32-38G	2"×0.217" Tube Butt Weld	2"×0.217" Tube Butt Weld	1.5 (38.1)	——	——	——	——
BK□□-PB24-38G	1 1/2×SCH80 Pipe Butt Weld	1 1/2×SCH80 Pipe Butt Weld		——	——	——	——
BK□□-PS24-38G	1 1/2" Pipe Socket Weld	1 1/2" Pipe Socket Weld		——	——	——	——

1. Connection type of "FITOK" means FITOK double ferrule tube fittings.
2. Sizes and types listed are standard. Other sizes and types are available upon request. For details, please contact FITOK Group or our authorized distributors.
3. Dimensions are shown with FITOK tube fitting nuts finger-tight. For dimensions not shown above, please contact FITOK Group or our authorized distributors.

Ordering Number Description

BKSS – FL10 – PB8 – 13G

Series	Body Material	Connection 1 Type	Connection 1 Size	Connection 2 Type	Connection 2 Size	Orifice Size	Packing Material
BK	SS CF8M S4 CF8	FL Fractional Tube Fitting ML Metric Tube Fitting TB Fractional Tube Butt Weld TS Fractional Tube Socket Weld PB Pipe Butt Weld PS Pipe Socket Weld	8 1/2" or 1/2×SCH80 10 5/8" 12 3/4" or 3/4"×0.120" or 3/4×SCH80 14 7/8" 16 1" or 16 mm 18 18 mm 20 1 1/4" or 20 mm or 1 1/4×SCH80 24 1 1/2" or 1 1/2"×0.197" or 1 1/2×SCH80 32 2"×0.217"	Same as Connection 1 Specified in the same way as Connection 1 type and size		13 0.5" (12.7 mm) 25 1" (25.4 mm) 38 1.5" (38.1 mm)	G Graphite

1. If you need a port with orbital welding, please contact FITOK Group.

Note: "Ordering Number Description" is a reference to understand the combination rules of FITOK product part number. Not all combinations are available.

Alternative Fuel Service (AFS) Ball Valves

BU Series

Features

- Working pressures up to 6000 psig (414 bar)
- Working temperature: -40 to 250°F (-40 to 121°C)
- High flow-Cv from 4.0 to 13.8
- Low-temperature fluorocarbon material provides sealing capability over full temperature range
- Spring-loaded seat provides leak-tight integrity in both low-and high-pressure systems and reduces seat wear from pressure surges
- A variety of end connections available
- Low operating torque
- All wetted components are compatible with hydrogen and compressed natural gas (CNG)
- No packing adjustment required
- Bidirectional flow
- Options for handle colors
- Pneumatic actuators available
- Each valve is leak tested with nitrogen or compressed air at working pressure to meet a requirement of no visible leak
- Field repairable with seal kit
- ECE R110 type approval available

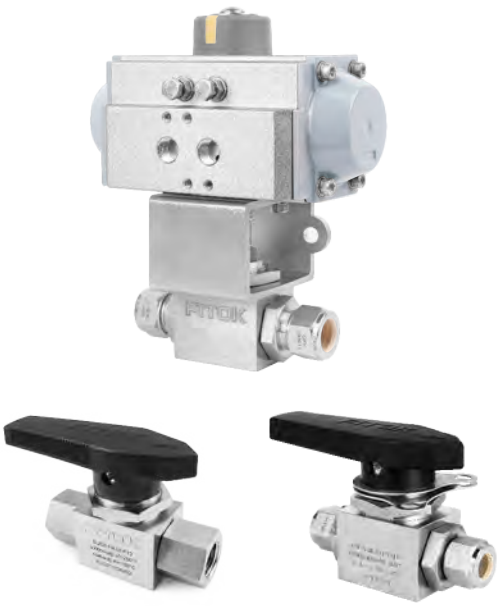

Pressure VS Temperature Ratings

End Connection	FITOK Tube Fitting			Female Pipe	
	3/8, 1/2 in., 12 mm	3/4 in., 16 mm	1 in.	3/8, 1/2 in.	3/4 in.
Temperature °F (°C)	Working Pressure, psig (bar)				
-40 (-40) ~ 250 (121)	6000 (414)	5800 (400)	4700 (324)	6000 (414)	6000 (414)

Note: Ratings are based on valves of standard materials.

Standard Materials of Construction

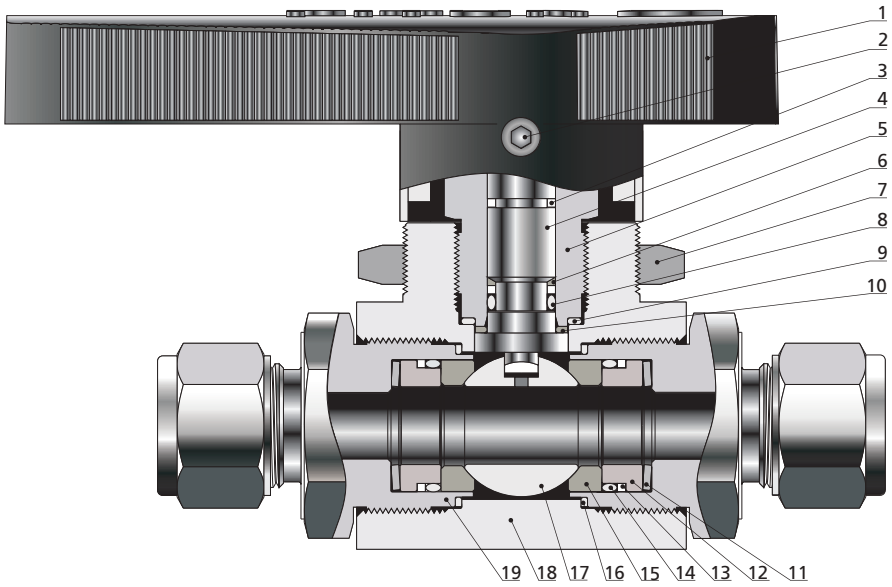

Item	Component	Material/ASTM Specification
1	Handle	Nylon with stainless steel insert
2	Set screw	Zinc-plated carbon steel
3	*Guide ring*	*PTFE/D1710*
4	*Stem*	*316 SS/A479*
5	*Packing bolt*	*316 SS/A479*
6	*Stem backup ring*	*PEEK*
7	Lock nut	316 SS/A479
8	*Stem O-ring*	*Low-temperature fluorocarbon*
9	*Packing bolt washer*	*Silver-plated 316 SS/A269*
10	*Thrust washer*	*PEEK*
11	*Coned-disc spring*	*316 SS/A240*
12	*Seat gland*	*316 SS/A479*
13	*Seat backup ring*	*PTFE/D1710*
14	*Seat O-ring*	*Low-temperature fluorocarbon*
15	*Seat*	*PEEK*
16	*End connection gasket*	*Silver-plated 316 SS/A269*
17	*Ball*	*316 SS/A479*
18	*Body*	*316 SS/A479*
19	*End connection*	*316 SS/A479*
	Lubricant	*PTFE-based*

Note: Wetted components listed in italics.

Dimensions

Dimensions in in. (mm) are for reference only and subject to change.

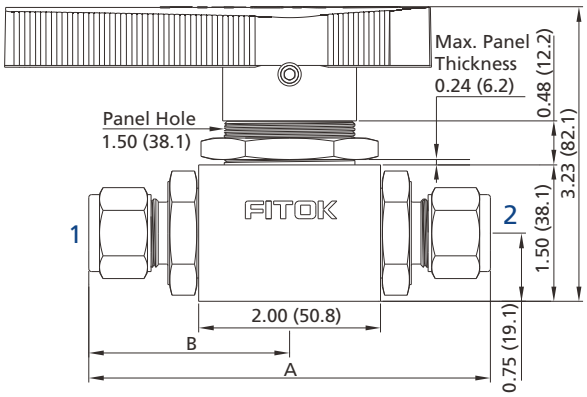

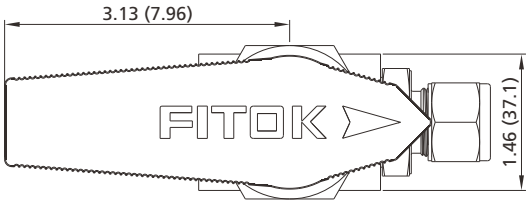

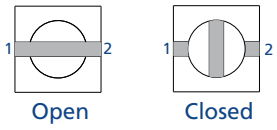

Ordering Number	Connection① Type and Size	Cv	Orifice in. (mm)	Dimensions in. (mm)	
				A	B
BUSS-ML10-P12	10 mm FITOK	5.2	0.31 (7.9)	4.21 (107)	2.11 (53.5)
BUSS-ML12-P12	12 mm FITOK	5.2	0.41 (10.3)	4.42 (112.2)	2.21 (56.1)
BUSS-ML16-P12	16 mm FITOK	12.4	0.47 (12.0)	4.42 (112.3)	2.21 (56.2)
BUSS-FL6-P12	3/8" FITOK	4.0	0.28 (7.1)	4.20 (106.6)	2.10 (53.3)
BUSS-FL8-P12	1/2" FITOK	7.2	0.41 (10.3)	4.40 (111.8)	2.20 (55.9)
BUSS-FL12-P12	3/4" FITOK	7.1	0.47 (12.0)	4.50 (114.3)	2.46 (62.5)
BUSS-FL16-P12	1" FITOK	6.5	0.47 (12.0)	4.93 (125.1)	2.25 (57.1)
BUSS-FNS6-P12	3/8" Female NPT	11.0	0.47 (12.0)	4.01 (102)	2.00 (50.8)
BUSS-FNS8-P12	1/2" Female NPT	13.8		4.01 (102)	2.00 (50.8)
BUSS-FNS12-P12	3/4" Female NPT	7.8		4.13 (105)	2.06 (52.3)
BUSS-FRT8-P12	1/2" Female BSPT	13.8		4.01 (102)	2.00 (50.8)

Note: Dimensions shown with FITOK tube fitting nuts finger-tight.Valves can be ordered with two different end connections. Contact FITOK Group or our authorized distributors. Not recommended for panel mounting; not available with pneumatic actuator.

CNG/NGV Application

ECE R110 Manual Service Valve Type Approval
Classification: Class 0
Temperature: -40 to 248°F (-40 to 120°C)
Pressure: 3770 psig (260 bar)
To order, add -**R110** to the valve ordering number.
Example: BUSS-ML12-P12-**R110**
Seal kit for field replacement is available, see "Seal Kits".

Seal Kits

Seal Kit Name	Seal Kit Ordering Number	Seal Kit Content
Seat seal kit	SS-BU-P-SE	Seat, seat backup ring, seat O-ring, coned-disc spring, end connection gasket, instructions.
Stem and seat seal kit	SS-BU-P	Guide ring, stem backup ring, stem O-ring, packing bolt washer, thrust washer, seat, seat backup ring, seat O-ring, coned-disc spring, end connection gasket, instructions

Locking Device

Locking Device 1



Locking Device 1

- Locks BU series valves, featuring a locking hole diameter of 0.21 in (5.2 mm).
- To order a ball valve with Locking Device 1, add - **L** to the valve ordering number.
  Example: BUSS-ML12-P12- **L**

Locking Device 2



Locking Device 2

- Locks BU series valves, featuring a locking hole diameter of 0.34 in (8.7 mm).
- To order a ball valve with Locking Device 2, add - **LP** to the valve ordering number.
  Example: BUSS-ML12-P12-**LP**
- No impact on panel mounting.
- Locking device kits are also available for individual purchase to add locking functionality to your existing standard manual ball valves, with ordering information as follows:

Locking Device 2 Kits

Name	Kit Ordering Number	Content
Locking Device Kits	BUS4-12-LP-RK	Upper lock plate, lower lock plate, handle, hexagon socket set screws

Ball Valve without Handle

- Ball Valve without handle can be directly connected to the FITOK actuator assembly.
- To order, please add -**AM** to the valve ordering number.
  Example: BUSS-FL8-P12-**AM**

Ordering Number Description

BUSS – ML12 – FL12 – P12 – OHQL – SF2

Series	Body Material	Connection 1 Type	Connection 1 Size	Connection 2 Type	Connection 2 Size	Seat Material	Orifice Size	Handle/Actuator	Actuator	Locking Device	Special Application	Cleaning and Packaging
BU	SS 316 SS	FNS Female NPT	6 3/8"	Same as connection 1	Same as connection 1	P PEEK	12 0.472" (12.0 mm) Max.	Black Nylon Handle	None	No	None	FC-01
		FRT Female BSPT	8 1/2"	Specified in the same way as connection 1				I Red Nylon Handle	H Mechanical Limit Switch	L Locking Device 1	R110 ECE R110	F2 FC-02
		RT Male BSPT	10 10 mm					GR Green Nylon Handle	N Inductive Limit Switch	LP Locking Device 2	S NACE MR0175	
		FL Fractional Tube Fitting	12 3/4" or 12 mm					J Blue Nylon Handle	Q Solenoid Valve			
		ML Metric Tube Fitting	16 1" or 16 mm					U Black Aluminum Handle	HQ Mechanical Limit Switch and Solenoid Valve			
								AM Without Handle	NQ Inductive Limit Switch and Solenoid Valve			
								C 90° Normally Closed Pneumatic Actuator				
								O 90° Normally Open Pneumatic Actuator				
								D 90° Double Acting Pneumatic Actuator				

Note: "Ordering Number Description" is a reference to understand the combination rules of FITOK product part number. Not all combinations are available.

1. Standard thread pitch for metric threads are as follows:
   M10 and below: 1 mm
   M12 to M24: 1.5 mm
   Standard thread pitch is omitted in ordering number.
   For special thread pitch, specify in the ordering number.
2. For oxygen-enriched environment or hazardous media service, contact FITOK Group or our authorized distributors.
3. Cleaning and Packaging:
   FC-01: Standard cleaning and packaging for general industrial procedures.
   FC-02: Special cleaning and packaging for wetted system components to ensure compliance with product cleaning requirement of ASTM G93 Level C.
4. For more details about ball valves with pneumatic actuators, refer to Actuated Ball Valves.
5. Certifications do not include attachments to the valve, such as actuators or a different handle mechanism.

Plug Valves

PV Series



Features

- ◎ Working pressure up to: 3000 psig (207 bar)
- ◎ Working temperature: -10°F to 400°F (-23°C to 204°C)
- ◎ Sizes from 1/8" to 3/4" and 6 to 12 mm
- ◎ Easy to maintain and clean
- ◎ Low operating torque
- ◎ Replaceable plug assembly
- ◎ Handle as indicator of flow direction
- ◎ Options for handle color
- ◎ Positive handle shutoff
- ◎ Every valve leak tested with nitrogen or air at working pressure
- ◎ The inlet port for 3-way valves can only be the bottom port

Pressure vs. Temperature

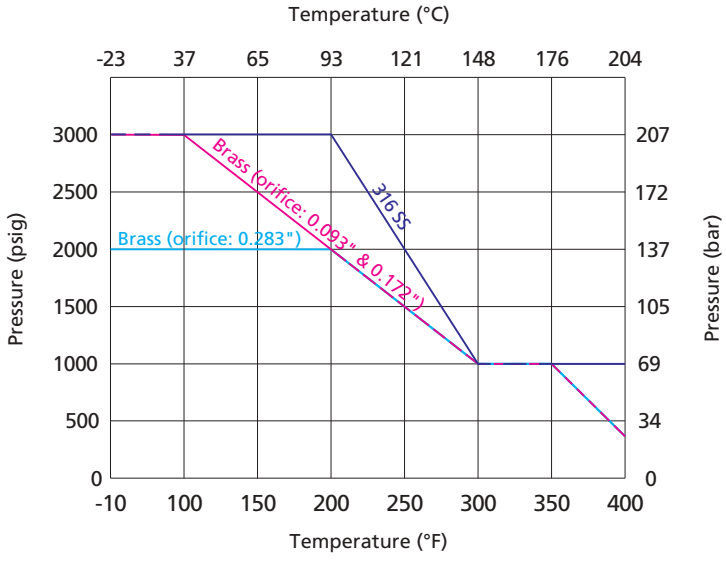

Operation (2-way)

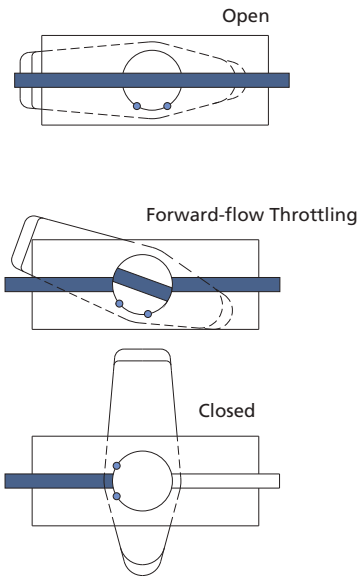

1. Differential pressure is limited to 150 psig (10.3 bar) maximum if reverse flow occurs.
2. Reverse flow throttling may damage O-ring.
3. The graphs are based on FKM O-ring.

Downstream Vents (2-way)

Plug and valve body allow pressure to be released to atmosphere when closed.
Maximum working pressure: 150 psig (10.3 bar).

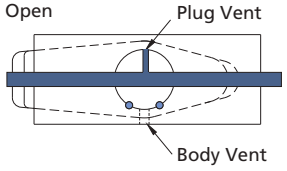

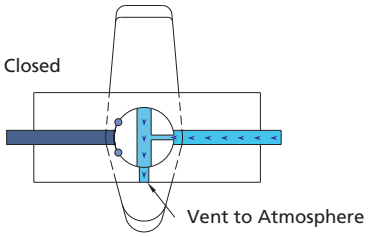

Standard Materials of Construction

2-way

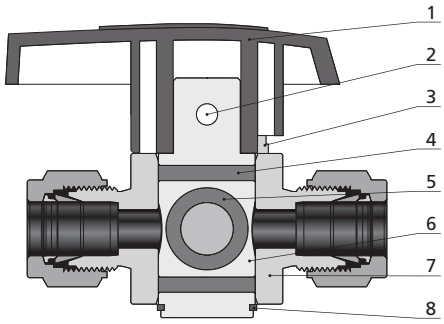

Item	Component	Material Grade/ASTM Specification	
		Valve Body Material	
		316 SS	Brass
1	Handle	Nylon or Aluminium	
2	Handle Pin	Stainless steel	
3	Body Pin	Stainless steel	
4	*O-ring*	*Fluorocarbon FKM or Neoprene or EPDM or Buna N or FFKM*	
5	*O-ring*	*Fluorocarbon FKM or Neoprene or EPDM or Buna N or FFKM*	
6	*Plug*	*PTFE-coated 316 SS/A479*	*PTFE-coated brass/B453*
7	*Body*	*316 SS/A479*	*Brass/B453*
8	Retaining Ring	Stainless steel	
Lubricant		*Silicone-based*	

Note: Wetted components are in italics.

3-way

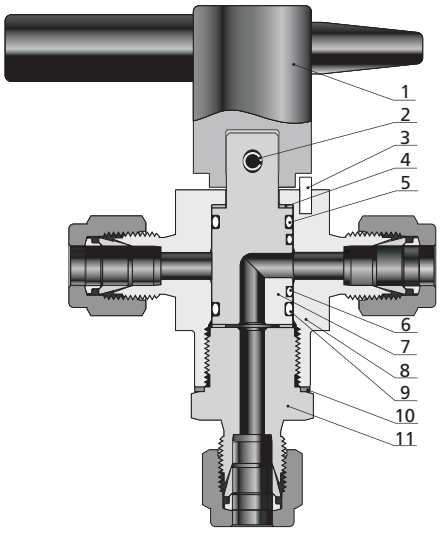

Inlet

Note: The 3-way plug valve is in working state when the handle is in limit positions. There will be a short moment of interconnection for the three ports when rotating the handle.

Item	Component	Material Grade/ASTM Specifications	
		Valve Body Material	
		316 SS	Brass
1	Handle	Aluminium	
2	Handle Pin	Stainless steel	
3	Body Pin	Stainless steel	
4	*Gasket*	*PTFE*	
5	*O-ring*	*Fluorocarbon FKM or Neoprene or EPDM or Buna N or FFKM*	
6	*O-ring*	*Fluorocarbon FKM or Neoprene or EPDM or Buna N or FFKM*	
7	*Plug*	*PTFE-coated 316 SS/A479*	*PTFE-coated brass/B453*
8	*Body*	*316 SS/A479*	*Brass/B453*
9	*O-ring*	*Fluorocarbon FKM or Neoprene or EPDM or Buna N or FFKM*	
10	*Gasket*	*Silver-plated 316 SS/A479*	*Aluminum/B209*
11	*Fitting*	*316 SS/A479*	*Brass/B453*
Lubricant		*Silicone-based*	

Note: Wetted components are in italics.

Dimensions

Dimensions, in inches (millimeters), are for reference only and are subject to change.

2-way Valves

Orifice code: 02 and 04

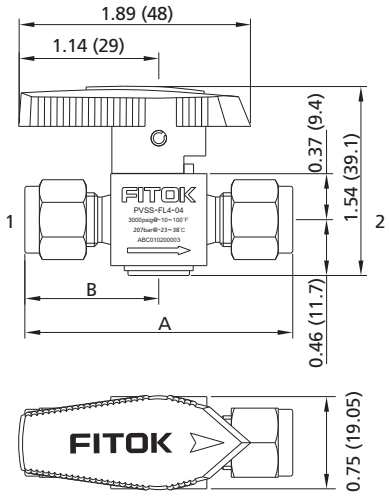

Orifice code: 07

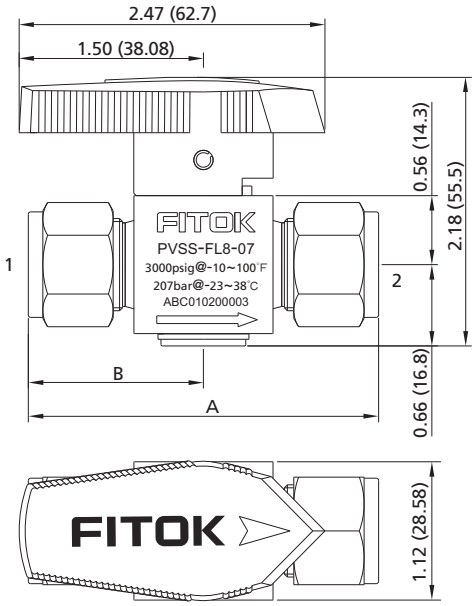

Basic Ordering Information	Connection Type and Size		Orifice in. (mm)	Cv	Dimensions, in. (mm)	
	Inlet **1**	Inlet **2**			A	B
PV□□-FL2-02	1/8" FITOK		0.09 (2.4)	0.1	1.99 (50.5)	0.98 (24.9)
PV □□-FL4-04	1/4" FITOK		0.17 (4.4)	1.6	2.17 (55.1)	1.08 (27.4)
PV□□ -FL6-04	3/8" FITOK			1.1	2.29 (58.2)	1.14 (29.0)
PV□□-FL6-07	3/8" FITOK		0.28 (7.2)	6.4	2.66 (67.6)	1.33 (33.8)
PV□□-FL8-07	1/2" FITOK			4.4	2.88 (73.2)	1.44 (36.6)
PV□□-ML6-04	6 mm FITOK		0.17 (4.4)	1.6	2.17 (55.1)	1.08 (27.4)
PV□□-ML8-04	8 mm FITOK			1.5	2.25 (57.1)	1.12 (28.6)
PV□□-ML10-07	10 mm FITOK		0.28 (7.2)	6.4	2.68 (68.1)	1.34 (34.0)
PV□□-ML12-07	12 mm FITOK			4.8	2.86 (72.6)	1.43 (36.3)
PV□□-FNS2-04	1/8 Female NPT		0.17 (4.4)	1.2	1.78 (45.2)	0.89 (22.6)
PV□□-FNS4-04	1/4 Female NPT			0.9	2.09 (53.1)	1.11 (28.2)
PV□□-FNS4-07	1/4 Female NPT		0.28 (7.2)	4.3	2.38 (60.5)	1.19 (30.2)
PV□□-FNS8-07	1/2 Female NPT			2.7	2.77 (70.3)	1.38 (35.2)
PV□□-NS2-04	1/8 Male NPT		0.17 (4.4)	1.0	1.53 (38.9)	0.76 (19.3)
PV□□-NS4-04	1/4 Male NPT			1.0	1.90 (48.3)	0.95 (24.1)
PV□□-NS8-07	1/2 Male NPT		0.28 (7.2)	2.4	2.64 (67.0)	1.32 (33.5)
PV□□-FRT2-04	1/8 Female BSPT		0.17 (4.4)	1.2	1.78 (45.2)	0.89 (22.6)
PV□□-FRT4-04	1/4 Female BSPT			0.9	2.09 (53.1)	1.11 (28.2)
PV□□-FRT4-07	1/4 Female BSPT		0.28 (7.2)	4.3	2.38 (60.5)	1.19 (30.2)
PV□□-FRT8-07	1/2 Female BSPT			2.7	2.77 (70.3)	1.38 (35.2)

3-way Valves

Orifice code: 02 and 04

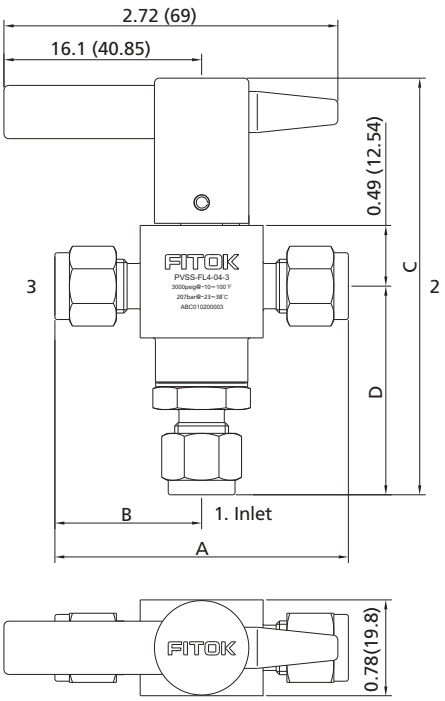

Orifice code: 07

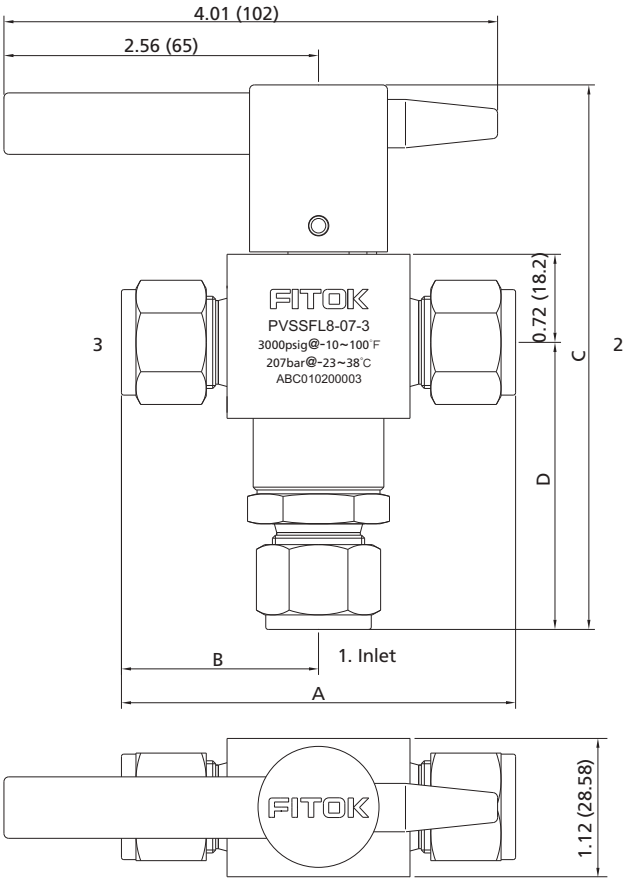

Basic Ordering Information	Connection Type and Size		Orifice in. (mm)	Dimensions, in. (mm)			
	Inlet 1	Inlet 2/3		A	B	C	D
PV□□-FL2-02-3	1/8" FITOK		0.09 (2.4)	2.19 (55.7)	1.09 (27.8)	3.29 (83.6)	1.60 (40.6)
PV□□-FL4-04-3	1/4" FITOK		0.17 (4.4)	2.40 (60.6)	1.20 (30.3)	3.39 (86.1)	1.69 (43.1)
PV□□-FL6-04-3	3/8" FITOK			2.25 (64.0)	1.26 (32.0)	3.46 (87.8)	1.76 (44.8)
PV□□-FL6-07-3	3/8" FITOK		0.28 (7.2)	3.01 (76.4)	1.51 (38.4)	4.33 (110)	2.24 (56.8)
PV□□-FL8-07-3	1/2" FITOK			3.21 (81.6)	1.61 (40.8)	4.43 (112.6)	2.24 (59.4)
PV□□-ML6-04-3	6 mm FITOK		0.17 (4.4)	2.41 (61.3)	1.21 (30.7)	3.40 (86.4)	1.71 (43.5)
PV□□-ML8-04-3	8 mm FITOK			2.48 (62.9)	1.24 (31.4)	3.43 (87.2)	1.74 (44.2)
PV□□-ML10-07-3	10 mm FITOK		0.28 (7.2)	3.02 (76.8)	1.51 (38.4)	4.34 (110.2)	2.24 (57.0)
PV□□-ML12-07-3	12 mm FITOK			3.21 (81.6)	1.61 (40.8)	4.44 (112.8)	2.35 (59.6)
PV□□-FNS2-04-3	1/8 Female NPT		0.17 (4.4)	2.06 (52.3)	1.03(26.2)	3.01 (76.4)	1.11 (33.4)
PV□□-FNS4-04-3	1/4 Female NPT					3.19 (81.0)	1.50 (38.0)
PV□□-FNS4-07-3	1/4 Female NPT		0.28 (7.2)	2.38 (60.5)	1.19 (30.3)	3.98 (101.2)	1.89 (48.0)
PV□□-FNS6-07-3	3/8 Female NPT						
PV□□-NS2-04-3	1/8 Male NPT		0.17 (4.4)	1.76 (44.8)	0.88 (22.4)	3.08 (78.2)	1.39 (35.2)
PV□□-NS4-04-3	1/4 Male NPT			2.04 (51.9)	1.02 (26.0)	3.26 (82.7)	1.56 (39.7)
PV□□-NS4-07-3	1/4 Male NPT		0.28 (7.2)	2.46 (62.5)	1.23 (31.3)	4.13 (104.9)	2.04 (51.7)
PV□□-NS6-07-3	3/8 Male NPT						

Locking Device

◎ Lock PV series plug valves, locking hole diameter is 0.39 in (9.9 mm).
◎ To order a plug valve with locking device, add -L to the valve ordering number.
Example: PVSS-FL4-04-L
◎ Aluminum handle is standard for PV series plug valves with locking device while stainless steel handle is optional.

Handle Color	Handle Material	Designator	Part No. Example
Black	Aluminum	-	PVSS-FL4-04-L
Red		R	PVSS-FL4-04R-L
Green		GR	PVSS-FL4-04GR-L
Yellow		Y	PVSS-FL4-04Y-L
Blue		B	PVSS-FL4-04B-L
Stainless Steel	304 SS	SD	PVSS-FL4-04SD-L

Construction Materials

Item	Component	Material
1	Screw	SS
2	Handle	Aluminum or 304 SS
3	Lock Plate	304 SS/A240
4	Bracket	304 SS/A240



Note: Other components not listed are consistent with standard construction materials.

Dimensions

Dimensions, in inches (millimeters), are for reference only and are subject to change.

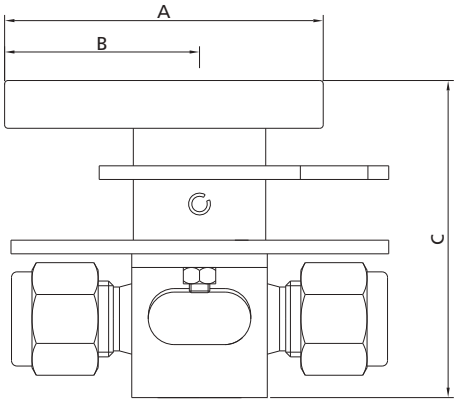

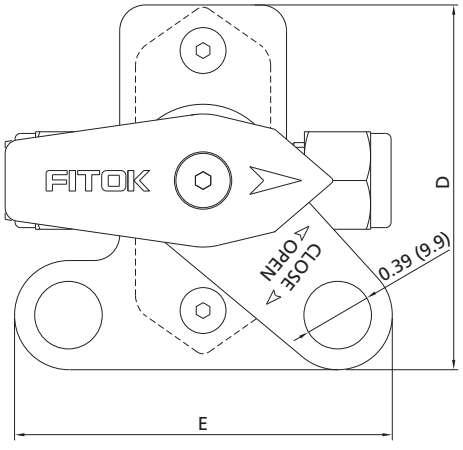

Orifice	Dimensions, in. (mm)				
	A	B	C	D	E
02/04	1.84 (46.9)	1.13 (28.6)	1.83 (46.5)	2.11 (53.5)	2.18 (55.5)
07	2.48 (63.0)	1.50 (38.1)	2.52 (64.1)	2.70 (68.6)	2.70 (68.6)

FITOK

Ordering Number Description

PVSS – FL8 – ML12 – FL8 – B04GRV – L – 3SF2

Series	Body Material	Inlet 1 Type	Inlet 1 Size	Outlet 2/3 Type	Outlet 2/3 Size	O-ring Material	Orifice	Handle	Downstream Vent	Locking Device	Flow Pattern	Special Application	Cleaning and Packaging
PV	SS 316 SS 6L 316L SS S4 304 SS B Brass	FNS Female NPT NS Male NPT FRT Female BSPT RT Male BSPT FMS Female Metric Thread (for RG-M) MS Male Metric Thread (for RG-M) FRP Female BSPP (for RP) BP Male BSPP (for RG) FL Fractional Tube Fitting ML Metric Tube Fitting	2 1/8" 3 3 mm 4 1/4" 6 3/8" or 6 mm 8 1/2" or 8 mm 10 10 mm 12 3/4" or 12 mm	Same as Inlet 1 Specified in the same way as inlet 1 type and size		Fluorocarbon FKM B Buna N E EPDM N Neoprene Z FFKM	02 0.09" (2.4 mm) 04 0.17" (4.4 mm) 07 0.28" (7.2 mm)	Black Handle① R Red Handle① GR Green Handle① Y Yellow Handle① B Blue Handle① U Black Bar Aluminum Handle② (2-way) SD Stainless Steel Directional Handle③ SH Stainless Steel Bar Handle②	No V YES (2-way)	No L Yes	2-way 3 3-way	No S NACE MR0175	FC-01 F2 FC-02

1. Standard thread pitch for metric threads are as follows:
   M10 and below: 1 mm
   M12 to M24: 1.5 mm
   Standard thread pitch should be omitted in the ordering number, others should be specified.
2. For oxygen-enriched environment or hazardous media service, please contact FITOK Group or our authorized distributors.
3. Cleaning and Packaging:
   FC-01: Standard cleaning and packaging for general industrial procedures.
   FC-02: Special cleaning and packaging for wetted system components to ensure compliance with product cleanliness requirement of ASTM G93 Level C.

① The handle material of 2-way valves is nylon, while that of 3-way valves is aluminum.
② Please refer to the handles of 3-way valves for the appearance of bar handles.
③ Please refer to the handles of locking devices for the appearance of directional handles.

Note: "Ordering Number Description" is a reference to understand the combination rules of FITOK product part number. Not all combinations are available.

Needle Valves, Metering Valves

Needle Valves  B-84

Metering Valves  B-126

Needle Valves

NB, ND, NDH, NF, NFH, NG, NGH, NR, NRG, NT, NU, NUH and NY Series



Contents

Screwed Bonnet Needle Valves
NB Series



B-86

Nonrotating-stem Needle Valves
ND Series and NDH Series



B-91

Forged Body Needle Valves
NF Series and NFH Series



B-95

Integral Bonnet Needle Valves
NG Series and NGH Series



B-101

Rising Plug Valves
NR Series and NRG Series



B-108

Toggle Valves
NT Series



B-112

Union Bonnet Needle Valves
NU Series and NUH Series



B-116

Outside Screw and Yoke (OS&Y) Needle Valves
NY Series



B-122

Notes:

◎ Packing adjustment may be required during the service life of the valve

◎ For better quality maintenance, FITOK instrumentation needle valves should be kept in half open position in warehouse

Screwed Bonnet Needle Valves

NB Series: Working pressure up to 6000 psig





Features

- Cold drawn bar as body
- Two-piece stem design: Upper stem threads cold rolled and lower stem hardened for high strength and smooth operation
- Upper stem thread lubricant isolated from system media
- Linear instead of rotary motion of the rising, non-rotating stem minimizes packing abrasion and reduces the friction between the seat and the tip
- Safety back seating seal in fully open position
- Panel mounting available
- Steady and durable fastening of the handle by double lock-pins
- Handles of different colors available
- Every valve leak tested with nitrogen or compressed air at the maximum allowable working pressure
- Working pressure up to:
  Stainless steel: 6000 psig (414 bar)
  Alloy C-276: 6000 psig (414 bar)
  Alloy 400: 5000 psig (345 bar)
  Titanium: 3500 psig (241 bar)
  Brass: 3000 psig (207 bar)
- Working temperature:
  PTFE: -65°F to 450°F(-54°C to 232°C)
  PEEK: -65°F to 500°F (-54°C to 260°C)
  Graphite: -65°F to 1200°F (-54°C to 649°C)

Pressure vs. Temperature

NB Series

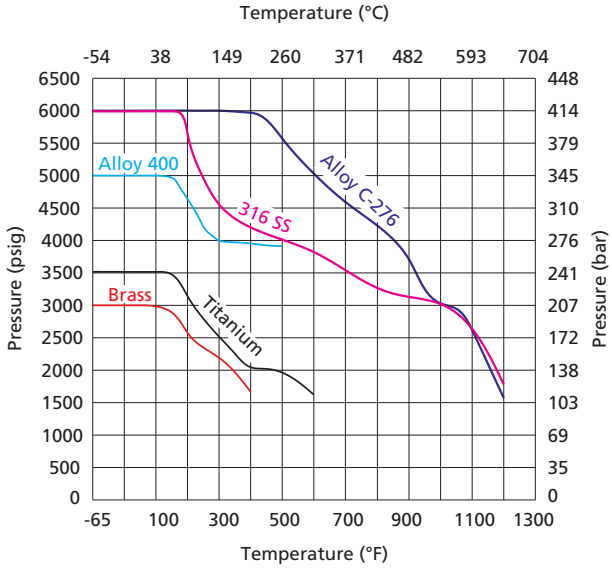

1. Graphs are based on graphite packing.
2. Temperature rating is limited to 200°F (93°C) max. with PCTFE stem tip (soft tip).
3. Contact FITOK Group or our authorized distributors for curve graph of other materials.

Flow Data at 100°F (38°C)

Regulating Stem Tip

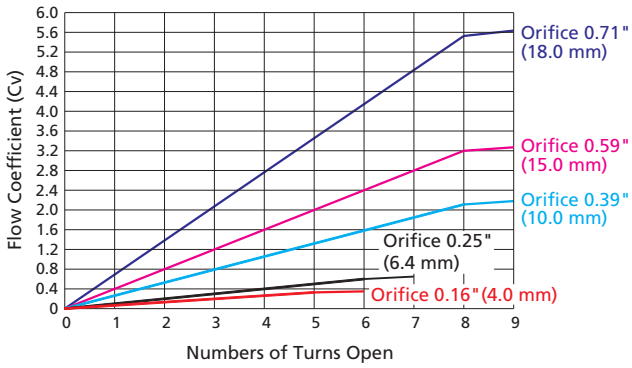

Standard Materials of Construction

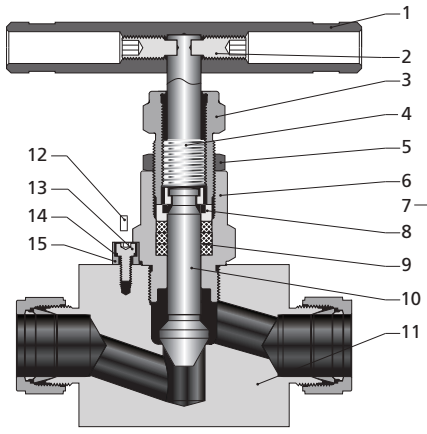

NB Series

Panel Mounting

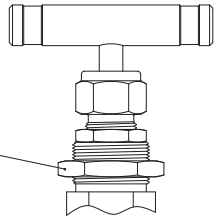

Stem Tip Type

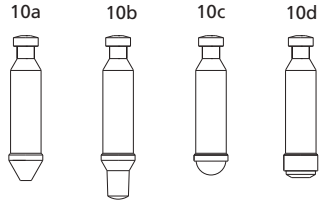

Item	Component	Valve Body Material				
		316 SS	Alloy 400	Titanium	Alloy C-276	Brass
		Material Grade/ASTM Specification				
1	Handle	Anodized aluminum or stainless steel or black knob				
2	Set Screw	Zinc-plated carbon steel				
3	Packing Bolt	304 SS/A479				Brass C36000/B16
4	Upper Stem	316 SS/A479				
5	Lock Nut	Stainless steel				Brass C36000/B16
6	Bonnet	316 SS/A479	Alloy 400/B164	Titanium Gr 4/B348	Alloy C-276/B574	

Item	Component	Valve Body Material				
		316 SS	Alloy 400	Titanium	Alloy C-276	Brass
		Material Grade/ASTM Specification				
7	Panel Nut	Stainless steel				Brass C36000/B16
8	Gland	316 SS/A479				
9	Packing	PTFE or PEEK or graphite				
10a 10b 10c	Lower Stem	Hardened 316 SS/A479	Alloy 400/B164	Titanium Gr 4/B348	Alloy C-276/B574	Hardened 316 SS/A479
10d	Stem	316 SS/A479	Alloy 400/B164	Titanium Gr 4/B348	Alloy C-276/B574	316 SS/A479
	Stem Tip	PTFE or PCTFE				
11	Body	316 SS/A479	Alloy 400/B164	Titanium Gr 4/B348	Alloy C-276/B574	Brass C36000/B16
	Seat	Same as body				
12	Lock Pin	Stainless steel				
13	Screw	Stainless steel				
14	Spring Washer	Stainless steel				
15	Bush	Stainless steel				
	Lubricant	Molybdenum disulfide-based				

1. Item 12 is applied in valves with orifice of 4.0 and 6.0mm. For valves with orifice of 10.0, 15.0 and 18.0mm, item 13, 14 and 15 are used instead of item 12.
2. Contact FITOK Group or our authorized distributors for other materials.

Dimensions

Straight Pattern

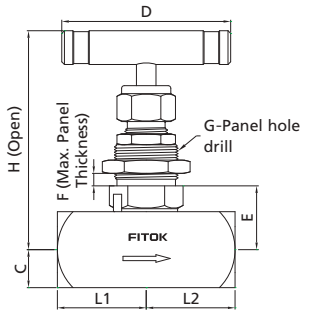

Angle Pattern

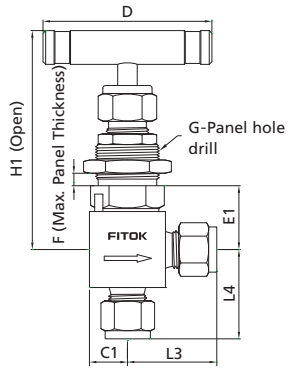

◎ NB Series Needle Valves are standard without panel mounting. To order needle valves with panel mounting as illustrated, add -**Y** to the ordering number. Example: NBSS-FNS2-7-**Y**

Dimensions of NB Series

Basic Ordering Number	Connection Type and Size	Connection Pressure at 100°F (38°C) psig (bar)	Orifice in.(mm)	Cv	Dimensions, in.(mm)												
	Inlet/Outlet	316 SS			L1	L2	L3	L4	C	C1	D	E	E1	F	G	H	H1
NB□□-FNS2-7	1/8 Female NPT	6000 (414)	0.16 (4.0)	0.35	1.00 (25.4)	1.00 (25.4)	1.00 (25.4)	0.56 (14.3)	0.50 (12.7)	0.50 (12.7)	2.17 (55)	0.84 (21.4)	0.82 (20.9)	0.25 (6.4)	0.77 (19.6)	2.86 (72.7)	2.86 (72.7)
NB□□-FNS4-7	1/4 Female NPT				1.06 (26.9)	1.06 (26.9)											
NB□□-NS4-7	1/4 Male NPT				1.03 (26.2)	1.03 (26.2)	1.06 (26.9)	1.06 (26.9)									
NB□□-NS6-7	3/8 Male NPT				1.19 (30.2)	1.19 (30.2)											
NB□□-FL4-7	1/4" FITOK				1.20 (30.5)	1.20 (30.5)	1.20 (30.5)	1.20 (30.5)									
NB□□-ML6-7	6 mm FITOK																
NB□□-ML8-7	8 mm FITOK																
NB□□-FNS4-8	1/4 Female NPT		0.25 (6.4)	0.85	1.12 (28.6)	1.12 (28.6)	1.12 (28.6)	0.63 (15.9)	0.56 (14.3)	0.56 (14.3)	2.50 (63.5)	0.89 (22.5)	0.89 (22.5)	0.38 (9.7)	0.96 (24.4)	3.50 (88.9)	3.50 (88.9)
NB□□-FNS6-8	3/8 Female NPT																
NB□□-NS6-8	3/8 Male NPT							1.12 (28.6)									
NB□□-FL6-8	3/8" FITOK				1.41 (35.8)	1.41 (35.8)	1.32 (33.6)	1.32 (33.6)									
NB□□-FL8-8	1/2" FITOK				1.52 (38.6)	1.52 (38.6)	1.42 (36.1)	1.42 (36.1)									

Dimensions of NB Series

Basic Ordering Number	Connection Type and Size	Connection Pressure at 100°F (38°C) psig (bar)	Orifice in.(mm)	Cv	Dimensions, in.(mm)												
	Inlet/Outlet	316 SS			L1	L2	L3	L4	C	C1	D	E	E1	F	G	H	H1
NB□□-ML10-8	10 mm FITOK	6000 (414)	0.25 (6.4)	0.85	1.42 (36.1)	1.42 (36.1)	1.33 (33.8)	1.33 (33.8)	0.56 (14.3)	0.56 (14.3)	2.50 (63.5)	0.89 (22.5)	0.89 (22.5)	0.38 (9.7)	0.96 (24.4)	3.50 (88.9)	3.50 (88.9)
NB□□-ML12-8	12 mm FITOK				1.52 (38.6)	1.52 (38.6)	1.42 (36.1)	1.42 (36.1)									
NB□□-ML14-8	14 mm FITOK				1.56 (39.7)	1.56 (39.7)											
NB□□-TS6-8-G	3/8" Tube Socket Weld				1.13 (28.6)	1.13 (28.6)	1.13 (28.6)	1.13 (28.6)									
NB□□-TS8-8-G	1/2" Tube Socket Weld																
NB□□-MTS12-8-G	12 mm Tube Socket Weld																
NB□□-MTS14-8-G	14 mm Tube Socket Weld																
NB□□-MTS16-8-G	16 mm Tube Socket Weld																
NB□□-MTB14-8-G	14×2.5 mm Tube Butt Weld				1.50 (38.1)	1.50 (38.1)	1.50 (38.1)	1.50 (38.1)									
NB□□-MTB16-8-G	16×2.8 mm Tube Butt Weld																
NB□□-UMB14-8	14×2.5 mm Rotatable Tube Butt Weld				2.92 (74.1)	2.92 (74.1)	___	___									
NB□□-UMB16-8	16×2.8 mm Rotatable Tube Butt Weld																
NB□□-MS20-8	M20 x 1.5 Male Metric				1.50 (38.1)	1.50 (38.1)											
NB□□-MS22-8	M22 x 1.5 Male Metric																
NB□□-FNS8-9	1/2 Female NPT		0.39 (10.0)	2.18	1.75 (44.5)	1.75 (44.5)	1.63 (41.3)	1.50 (38.1)	0.88 (22.2)	0.77 (19.5)	3.50 (88.9)	1.38 (34.9)	1.25 (31.75)	0.38 (9.7)	1.08 (27.5)	4.11 (104.5)	4.11 (104.5)
NB□□-FNS12-9	3/4 Female NPT																
NB□□-NS12-9	3/4 Male NPT						1.50 (38.1)										
NB□□-FL12-9	3/4" FITOK	5800 (400)			1.97 (50.0)	1.97 (50.0)	1.61 (41.0)	1.61 (41.0)									
NB□□-ML14-9	14 mm FITOK	6000 (414)															
NB□□-ML16-9	16 mm FITOK	5800 (400)															
NB□□-ML18-9	18 mm FITOK	5370 (370)															
NB□□-MTS14-9-G	14 mm Tube Socket Weld	6000 (414)			1.75 (44.5)	1.75 (44.5)	___	___									
NB□□-MTS16-9-G	16 mm Tube Socket Weld																
NB□□-TS12-9-G	3/4" Tube Socket Weld																
NB□□-UMB14-9	14×2.5 mm Rotatable Tube Butt Weld				2.98 (75.7)	2.98 (75.7)											
NB□□-MS27-9	M27 x 2 Male Metric				1.56 (39.7)	1.56 (39.7)											
NB□□-FNS12-6	3/4 Female NPT		0.59 (15.0)	3.27	1.75 (44.5)	1.75 (44.5)	1.75 (44.5)	1.14 (29.0)	1.14 (29.0)	0.88 (22.2)	5.00 (127)	1.70 (43.2)	1.43 (36.4)	0.38 (9.7)	1.28 (32.5)	5.00 (127)	4.72 (120)
NB□□-TS16-6-G	1" Tube Socket Weld																
NB□□-MTS25-6-G	25 mm Tube Socket Weld						1.75 (44.5)	1.75 (44.5)									
NB□□-MTS28-6-G	28 mm Tube Socket Weld	5000 (345)															
NB□□-PS12-6-G	3/4 Pipe Socket Weld	5770 (398)															
NB□□-FNS16-0	1 Female NPT	4350 (300)	0.71 (18.0)	5.65	1.97 (50.0)	1.97 (50.0)	___	___	1.24 (31.5)	___	5.00 (127)	___	___	___	___	5.25 (133.3)	___
NB□□-MTS25-0-G	25 mm Tube Socket Weld	6000 (414)															
NB□□-TS16-0-G	1" Tube Socket Weld																
NB□□-MTS28-0-G	28 mm Tube Socket Weld																
NB□□-PS12-0-G	3/4 Pipe Socket Weld																
NB□□-PS16-0-G	1 Pipe Socket Weld	3700 (255)															

1. Connection type of "FITOK" means FITOK double ferrule tube fittings. When the connection type of valves is FITOK double ferrule tube fitting, the working pressures of the valves are related to the wall thickness of tubing applied. For specific working pressure of the valves, please refer to the allowable working pressures in FITOK Catalog Tubing.
2. Sizes and types listed are standard. Other sizes and types are available upon request. For details, please contact FITOK Group or our authorized distributors.
3. Dimensions are shown with FITOK tube fitting nuts finger-tight. All dimensions are for reference only and are subject to change. For dimensions not shown above, please contact FITOK Group or our authorized distributors.

FITOK

Ordering Number Description

NBSS - FL8 - ML12 - 8WB - GYM - ASF2

Series	Body Material	Inlet Type	Inlet Size	Outlet Type	Outlet Size	Orifice Size	Stem Tip Material	Stem Tip Type	Packing Material	Panel Mounting	Handle	Flow Pattern	Special Application	Cleaning and Packaging
NB	SS 316 SS	FNS Female NPT	2 1/8"	Same as Inlet	Same as Inlet	7 0.16" (4.0 mm)	Same as Body	Taper	PTFE	No	Black Aluminum Bar	Straight	No	FC-01
	6L 316L SS	NS Male NPT	4 1/4"	Specified in the same way as Inlet Type and Inlet Size		8 0.25" (6.4 mm)	W Stellite	R Regulating	P PEEK	Y Yes	I Red Aluminum Bar	A Angle	S NACE MR0175	F2 FC-02
	S4 304 SS	FRT Female BSPT	6 3/8" or 6 mm			9 0.39" (10 mm)	D5 Duplex 2205	B Ball	G Graphite		GR Green Aluminum Bar			
	4L 304L SS	RT Male BSPT	8 1/2" or 8 mm			6 0.59" (15 mm)	TI Titanium	T Soft Tip-PTFE			J Blue Aluminum Bar			
	S1 321 SS	FMS Female Metric Thread (for RG-M)	10 10 mm			0 0.71" (18 mm)	A20 Alloy 20	K Soft Tip-PCTFE			M Stainless Steel Bar			
	91 F91	MS Male Metric Thread (for RG-M)	12 3/4" or 12 mm				M Alloy 400	Soft stem tip only for NB Series Needle Valves with the orifice 0.16"/4.0mm, 0.25"/6.4mm and 0.39"/10mm			B Black Knob (only for NB Series Needle Valves with the orifice 0.16"/4.0mm and 0.25"/6.4mm)			
	92 F92	FRP Female BSPP (for RP)	14 14 mm or 14×2.5 mm or M14×1.5				INC Alloy 600							
	D5 Duplex 2205	BP Male BSPP (for RG)	16 1" or 16 mm or 16×2.8 mm				HC Alloy C-276							
	TI Titanium	TS Fractional Tube Socket Weld	18 18 mm											
	A20 Alloy 20	MTS Metric Tube Socket Weld	20 20 mm or M20 x 1.5											
	M Alloy 400	TB Fractional Tube Butt Weld	22 22 mm or M22 x 1.5											
	INC Alloy 600	MTB Metric Tube Butt Weld	24 M24 x 1.5											
	HC Alloy C-276	PS Pipe Socket Weld	25 25 mm											
	B Brass	PB Pipe Butt Weld	27 M27 x 2											
	CS Carbon Steel	FL Fractional Tube Fitting	28 28 mm											
	904L 904L SS	ML Metric Tube Fitting												
		UFB Rotatable Fractional Tube Butt Weld												
		UMB Rotatable Metric Tube Butt Weld												

Note: "Ordering Number Description" is a reference to understand the combination rules of FITOK product part number. Not all combinations are available.

1. Standard thread pitch for metric threads are as follows:
   M10 and below: 1 mm
   M12 to M24: 1.5 mm
   M27 and above: 2 mm
2. Cleaning and Packaging:
   FC-01: Standard cleaning and packaging for general industrial procedures.
   FC-02: Special cleaning and packaging for wetted system components to ensure compliance with product cleanliness requirement of ASTM G93 Level C.

Nonrotating-Stem Needle Valves

ND Series: Working pressure up to 3000 psig
NDH Series: Working pressure up to 5000 psig

Features

◎ One-piece forged body
◎ Straight and angle pattern
◎ Compact design
◎ Non-rotating stem
◎ Specially designed handle to stop contamination from entering into the valve
◎ Every valve leak tested with nitrogen or compressed air at the maximum allowable working pressure
◎ Working pressure up to:
ND Series—Stainless steel: 3000 psig (207 bar)
Brass: 3000 psig (207 bar)
NDH Series—Stainless steel: 5000 psig(345 bar)
◎ Working temperature with stem tip:
PCTFE stem tip: -20°F to 200°F (-28°C to 93°C)
PEEK stem tip: -20°F to 400°F (-28°C to 204°C)



◎ Working temperature with O-ring:
Fluorocarbon Rubber (FKM) : -20°F to 400°F (-28°C to 204°C)
Nitrile Butadiene Rubber (NBR) : -20°F to 212°F (-28°C to 100°C)
Ethylene Propylene Diene Rubber (EPDM): -20°F to 300°F (-28°C to 148°C)

Pressure vs. Temperature

ND Series

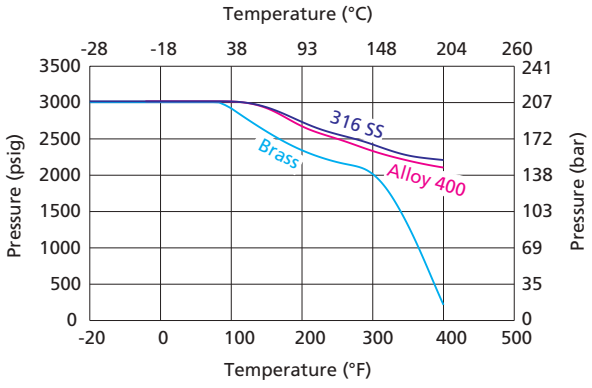

NDH Series

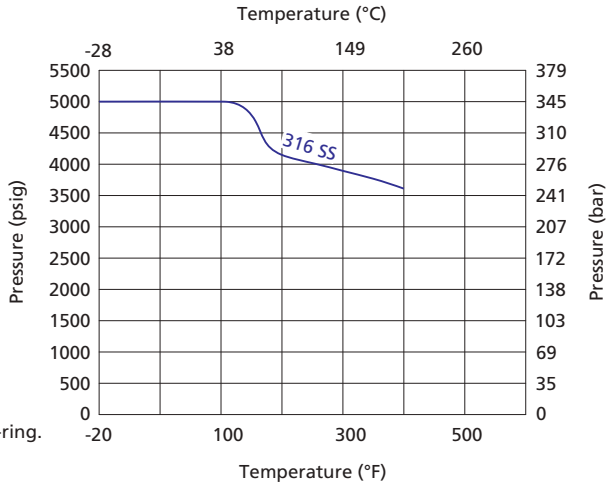

1. The graphs are based on PEEK stem tip and Fluorocarbon rubber (FKM) O-ring.
2. Contact FITOK Group or our authorized distributors for curve graph of other materials.

Flow Data at 100°F (38°C)

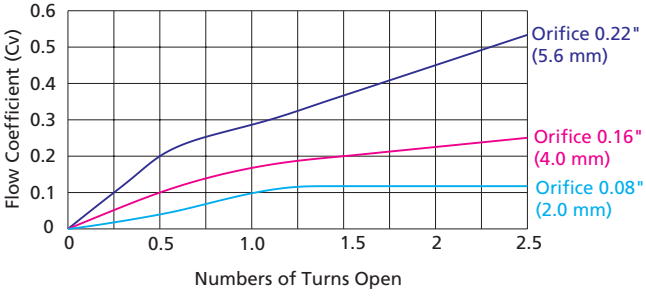

Standard Materials of Construction

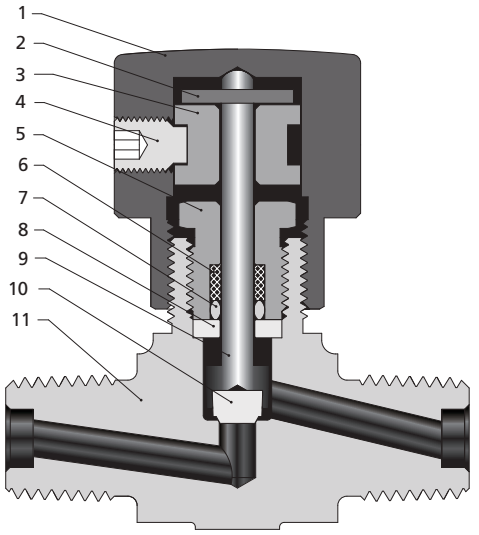

Item	Component	Valve Body Material				
		316 SS	304 SS	321 SS	Brass	Alloy 400
		Material Grade/ASTM Specification				
1	Handle	Anodized aluminum				
2	Stop Pin	Stainless steel				
3	Spool	Aluminum				
4	Set Screw	Stainless steel				
5	Packing Bolt	304 SS/A479			Brass C36000/B16	Alloy 400/B164
6	Backup Ring	PTFE/D1710				
7	O-ring	Fluorocarbon Rubber (FKM), Nitrile Butadiene Rubber (NBR) or Ethylene Propylene Diene Rubber (EPDM)				
8	Washer	316 SS/A479				Alloy 400/B164
9	Stem	316 SS/A479				Alloy 400/B164
10	Stem Tip	PCTFE or PEEK				
11	Body	316 SS/A182	304 SS/A182	321 SS/A182	Brass C37700/B283	Alloy 400/B564
	Lubricant	Molybdenum disulfide-based				

Note: Contact FITOK Group or our authorized distributors for other materials.

Dimensions

Straight Pattern

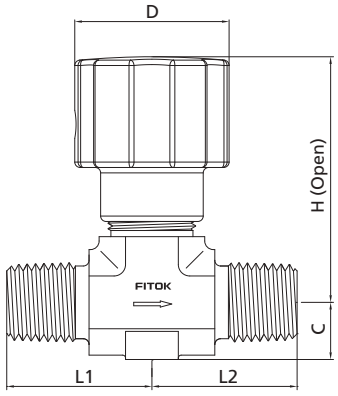

Angle Pattern

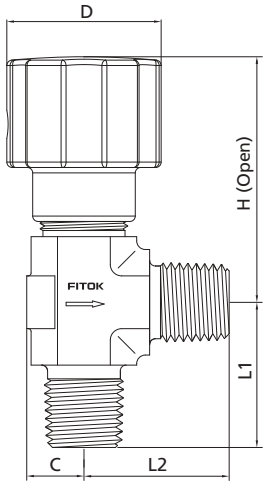

ND and NDH Series

Basic Ordering Number	Connection Type and Size		Orifice in.(mm)	Cv	Dimensions, in.(mm)				
	Inlet	Outlet			L1	L2	C	D	H
ND□□-NS2-5	1/8 Male NPT	1/8 Male NPT	0.08 (2.0)	0.12	0.81 (20.6)	0.81 (20.6)	0.32 (8.1)	1.06 (26.9)	1.86 (47.2)
ND□□-NS2-FL2-5	1/8 Male NPT	1/8" FITOK				1.10 (27.9)			
ND□□-FL2-5	1/8" FITOK	1/8" FITOK			1.10 (27.9)				
ND□□-ML3-5	3 mm FITOK	3 mm FITOK							
ND□□-NS4-7	1/4 Male NPT	1/4 Male NPT	0.16 (4.0)	0.27	0.98 (25.0)	0.98 (25.0)	0.39 (10.0)	1.13 (28.7)	1.86 (47.2)
ND□□-NS4-FL4-7	1/4 Male NPT	1/4 FITOK				1.13 (28.7)			
ND□□-FL4-7	1/4" FITOK	1/4" FITOK			1.13 (28.7)				
ND□□-ML6-7	6 mm FITOK	6 mm FITOK							
ND□□-ML8-7	8 mm FITOK	8 mm FITOK			1.18 (30.0)	1.18 (30.0)			
ND□□-FNS4-8	1/4 Female NPT	1/4 Female NPT	0.22 (5.6)	0.53	1.06 (26.9)	1.06 (26.9)	0.49 (12.5)	1.22 (31.0)	2.02 (51.3)
ND□□-NS6-8	3/8 Male NPT	3/8 Male NPT			1.12 (28.6)	1.12 (28.6)			
ND□□-FL6-8	3/8" FITOK	3/8" FITOK			1.29 (32.8)	1.29 (32.8)			
ND□□-FL8-8	1/2" FITOK	1/2" FITOK			1.40 (35.6)	1.40 (35.6)			
ND□□-ML10-8	10 mm FITOK	10 mm FITOK			1.30 (33.0)	1.30 (33.0)			
ND□□-ML12-8	12 mm FITOK	12 mm FITOK			1.40 (35.6)	1.40 (35.6)			
NDH□□-NS2-5	1/8 Male NPT	1/8 Male NPT	0.08 (2.0)	0.12	0.81 (20.6)	0.81 (20.6)	0.32 (8.1)	1.06 (26.9)	1.86 (47.2)
NDH□□-FL2-5	1/8" FITOK	1/8" FITOK			1.10 (27.9)	1.10 (27.9)			
NDH□□-ML3-5	3 mm FITOK	3 mm FITOK							
NDH□□-NS4-7	1/4 Male NPT	1/4 Male NPT	0.16 (4.0)	0.27	0.98 (25.0)	0.95 (25.0)	0.39 (10.0)	1.13 (28.7)	1.98 (50.2)
NDH□□-FL4-7	1/4" FITOK	1/4" FITOK			1.13 (28.7)	1.13 (28.7)			
NDH□□-ML6-7	6 mm FITOK	6 mm FITOK							

1. Connection type of "FITOK" means FITOK double ferrule tube fittings. When the connection type of valves is FITOK double ferrule tube fitting, the working pressures of the valves are related to the wall thickness of used applied. For specific working pressure of the valves, please refer to the allowable working pressures in FITOK Catalog Tubing.
2. Sizes and types listed are standard. Other sizes and types are available upon request. For details, please contact FITOK Group or our authorized distributors.
3. Dimensions are shown with FITOK tube fitting nuts finger-tight. All dimensions are for reference only and are subject to change. For dimensions not shown above, please contact FITOK Group or our authorized distributors.

Ordering Number Description

NDSS - FNS4 - ML8 - 7PE - ASF2

Series	Body Material	Inlet Type	Inlet Size	Outlet Type	Outlet Size	Orifice Size	Stem Tip Material	O-ring Material	Flow Pattern	Special Application	Cleaning and Packaging
ND	SS 316 SS	FNS Female NPT	2 1/8"	Same as Inlet	Same as Inlet	5 0.08" (2.0 mm)	PCTFE	Fluorocarbon Rubber (FKM)	Straight	No	FC-01
NDH	6L 316L SS	NS Male NPT	4 1/4"	Specified in the same way as inlet type and inlet size	Specified in the same way as inlet type and inlet size	7 0.16" (4.0 mm)	P PEEK	B Nitrile Butadiene Rubber (NBR)	A Angle	S NACE MR0175	F2 FC-02
	S4 304 SS	FRT Female BSPT	6 3/8" or 6 mm			8 0.22" (5.6 mm) Only for ND Series		E Ethylene Propylene Diene Rubber (EPDM)		SI SilcoNert® 2000 (Sulfinert®) Coating	
	4L 304L SS	RT Male BSPT	8 1/2" or 8 mm								
	S1 321 SS	FL Fractional Tube Fitting	10 10 mm								
	M Alloy 400	ML Metric Tube Fitting	12 12 mm								
	B Brass										

Note: "Ordering Number Description" is a reference to understand the combination rules of FITOK product part number. Not all combinations are available.

1. Cleaning and Packaging:
   FC-01: Standard cleaning and packaging for general industrial procedures.
   FC-02: Special cleaning and packaging for wetted system components to ensure compliance with product cleanliness requirement of ASTM G93 Level C.
2. Special Application:
   Plural special application designators available in one ordering number, example: NDSS-NS4-7-SSI.
   SilcoNert® 2000 (Sulfinert®) coating: Wetted metal components SilcoNert® 2000 (Sulfinert®) coated.

Forged Body Needle Valves

NF Series: Working pressure up to 6000 psig
NFH Series: Working pressure up to 10000 psig

Features

- ◎ One-piece forged body
- ◎ Two-piece stem design: Upper stem threads cold rolled and lower stem hardened for high strength and smooth operation
- ◎ Upper stem thread lubricant isolated from system media
- ◎ Linear instead of rotary motion of the rising, non-rotating stem minimizes packing abrasion and reduces the friction between the seat and the tip
- ◎ Panel mounting available
- ◎ Steady and durable fastening of the handle by double lock-pins
- ◎ Handles of different colors available
- ◎ Every valve leak tested with nitrogen or compressed air (NF Series) at the maximum allowable working pressure or with water (NFH Series) at 1.1 times the maximum allowable working pressure
- ◎ Working pressure up to:
  NF Series—Stainless steel: 6000 psig (414 bar)
  Alloy C-276: 6000 psig (414 bar)
  Alloy 400: 5000 psig (345 bar)
  Titanium: 3500 psig (241 bar)
  Brass: 3000 psig (207 bar)
  NFH Series—Stainless steel: 10000 psig (690 bar)
- ◎ Working temperature:
  PTFE: -65°F to 450°F (-54°C to 232°C)
  PEEK: -65°F to 500°F (-54°C to 260°C)
  Graphite: -65°F to 1200°F (-54°C to 649°C)



Pressure vs. Temperature

NF Series

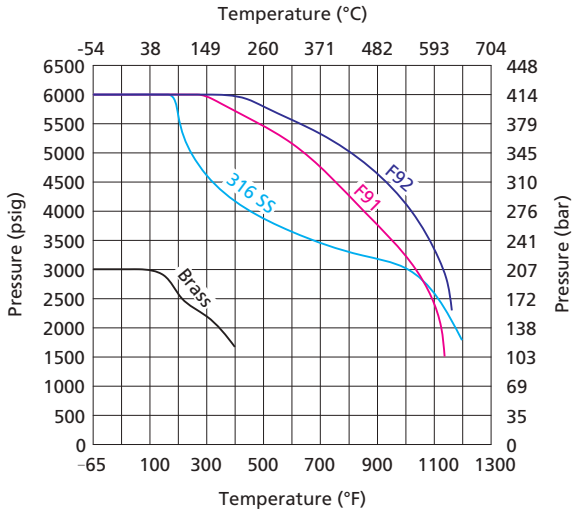

NFH Series

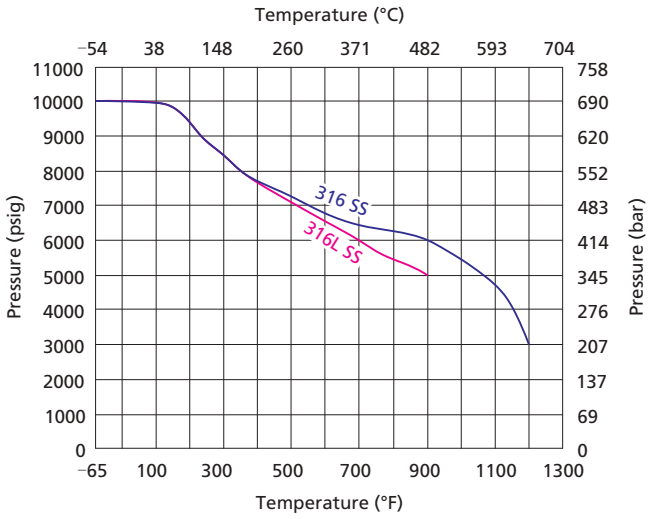

1. Graphs are based on graphite packing.
2. Soft tips are for NF Series only. Temperature rating is limited to 200°F (93°C) max. with PCTFE stem tip (soft tip).
3. Contact FITOK Group or our authorized distributors for curve graph of other materials.

Flow Data at 100°F (38°C)

Regulating Stem Tip

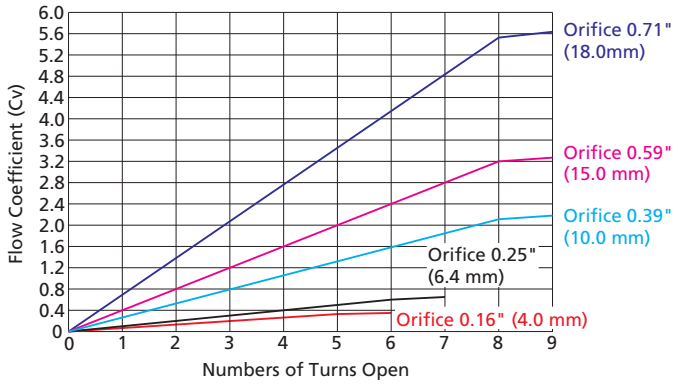

Standard Materials of Construction

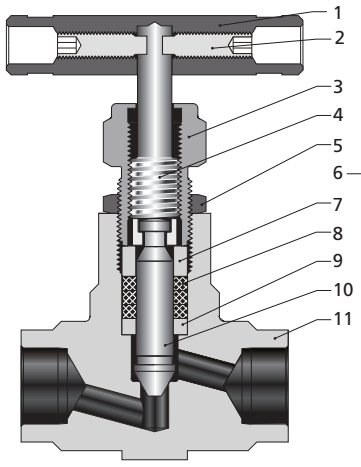

Panel Mounting

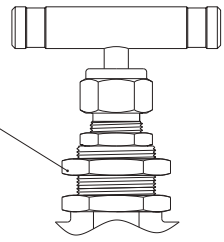

Stem Tip Type

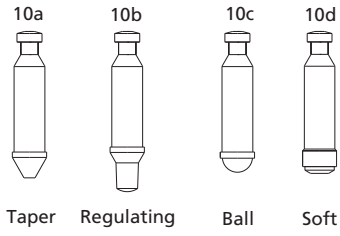

Item	Component	Valve Body Material		
		316 SS	F91	Brass
		Material Grade/ASTM Specification		
1	Handle	Anodized aluminum or stainless steel or black knob		
2	Set Screw	Zinc-plated carbon steel		
3	Packing Bolt	304 SS/A479	F91/A182	Brass C36000/B16
4	Upper Stem	316 SS/A479		
5	Lock Nut	Stainless steel	1020/A108	Brass C36000/B16
6	Panel Nut	Stainless steel	1020/A108	Brass C36000/B16
7	Gland	316 SS/A479		Brass C36000/B16
8	Packing	PTFE or PEEK or graphite		
9	Packing Washer	316 SS/A479		Brass C36000/B16
10a 10b 10c	Lower Stem	Hardened 316 SS/A479		
10d	Stem	316 SS/A479		
	Stem Tip	PTFE or PCTFE		
11	Body	316 SS/A182	F91/A182	Brass C37700/B283
	Seat	Same as body		
	Lubricant	Molybdenum disulfide-based		

Note: Contact FITOK Group or our authorized distributors for other materials.

Dimensions

Straight Pattern

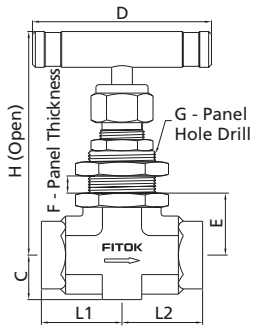

Angle Pattern

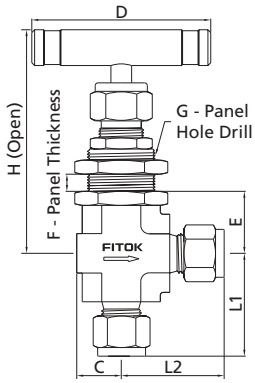

◎ NF Series Needle Valves are standard without panel mounting. To order needle valves with panel mounting as illustrated, add -**Y** to the ordering number. Example: NFSS-FNS2-7-**Y**

Dimensions of NF Series

Basic Ordering Number	Connection Type and Size	Connection Pressure at 100°F (38°C) psig (bar)	Orifice in.(mm)	Cv	Dimensions, in.(mm)							
	Inlet/Outlet	316 SS			L1	L2	H	D	C	E	F	G
NF□□-FNS2-7	1/8 Female NPT	6000 (414)	0.16 (4.0)	0.35	1.00 (25.4)	1.00 (25.4)	2.85 (72.5)	2.17 (55)	0.49 (12.5)	0.71 (18.0)	0.25 (6.4)	0.77 (19.6)
NF□□-FNS4-7	1/4 Female NPT				1.03 (26.2)	1.03 (26.2)						
NF□□-FL4-7	1/4" FITOK				1.22 (30.9)	1.22 (30.9)						
NF□□-ML6-7	6 mm FITOK											
NF□□-ML8-7	8 mm FITOK				1.25 (31.75)	1.25 (31.75)						
NF□□-NS4-7	1/4 Male NPT				1.03 (26.2)	1.03 (26.2)						
NF□□-NS6-7	3/8 Male NPT											
NF□□-FO4-7	1/4" Male FO				1.13 (28.6)	1.13 (28.6)						
NF□□-FR4-7	1/4" Male FR											
NF□□-FNS4-8	1/4 Female NPT		0.25 (6.4)	0.85	1.13 (28.6)	1.13 (28.6)	3.38 (85.8)	2.50 (63.5)	0.62 (15.8)	0.87 (22.0)	0.38 (9.7)	0.96 (24.4)
NF□□-FNS6-8	3/8 Female NPT											
NF□□-NS6-8	3/8 Male NPT				1.42 (36.1)	1.42 (36.1)						
NF□□-FL6-8	3/8" FITOK				1.44 (36.5)	1.44 (36.5)						
NF□□-ML10-8	10 mm FITOK											
NF□□-ML12-8	12 mm FITOK				1.53 (38.9)	1.53 (38.9)						
NF□□-ML14-8	14 mm FITOK				1.56 (39.7)	1.56 (39.7)						
NF□□-FNS8-8	1/2 Female NPT				1.26 (32.0)	1.26 (32.0)			0.76 (19.4)			
NF□□-NS8-8	1/2 Male NPT				1.50 (38.1)	1.50 (38.1)						
NF□□-FL8-8	1/2" FITOK				1.53 (38.9)	1.53 (38.9)						
NF□□-TS6-8-G	3/8" Tube Socket Weld											
NF□□-TS8-8-G	1/2" Tube Socket Weld											
NF□□-MTS12-8-G	12 mm Tube Socket Weld				1.13 (28.6)	1.13 (28.6)			0.62 (15.8)			
NF□□-MTS14-8-G	14 mm Tube Socket Weld											
NF□□-MTS16-8-G	16 mm Tube Socket Weld											
NF□□-MTB14-8-G	14×2.5 mm Tube Butt Weld				1.50 (38.1)	1.50 (38.1)						
NF□□-MTB16-8-G	16×2.8 mm Tube Butt Weld											
NF□□-UMB14-8	14×2.5 mm Rotatable Tube Butt Weld				2.92 (74.1)	2.92 (74.1)						
NF□□-UMB16-8	16×2.8 mm Rotatable Tube Butt Weld											
NF□□-FO8-8	1/2" Male FO				1.13 (28.6)	1.13 (28.6)						
NF□□-FR8-8	1/2" Male FR				1.56 (39.7)	1.56 (39.7)						
NF□□-MS20-8	M20 x 1.5 Male Metric				1.50 (38.1)	1.50 (38.1)						

Dimensions of NF Series

Basic Ordering Number	Connection Type and Size	Connection Pressure at 100°F (38°C) psig (bar)	Orifice in.(mm)	Cv	Dimensions, in.(mm)							
	Inlet/Outlet	316 SS			L1	L2	H	D	C	E	F	G
NF□□-MS22-8	M22 x 1.5 Male Metric	6000 (414)	0.25 (6.4)	0.85	1.50 (38.1)	1.50 (38.1)	3.38 (85.8)	2.50 (63.5)	0.62 (15.8)	0.87 (22.0)	0.38 (9.7)	0.96 (24.4)
NF□□-FNS8-9	1/2 Female NPT		0.39 (10.0)	2.18	1.56 (39.7)	1.56 (39.7)	3.86 (98.0)	3.50 (88.9)	0.80 (20.4)	1.10 (28.3)	0.38 (9.7)	1.08 (27.5)
NF□□-NS12-9	3/4 Male NPT											
NF□□-FL12-9	3/4" FITOK	5800 (400)			1.97 (50.0)	1.97 (50.0)			0.76 (19.4)			
NF□□-ML14-9	14 mm FITOK	6000 (414)										
NF□□-ML16-9	16 mm FITOK	5800 (400)										
NF□□-ML18-9	18 mm FITOK	5370 (370)										
NF□□-ML20-9	20 mm FITOK	5510 (380)										
NF□□-MTS14-9-G	14 mm Tube Socket Weld	6000 (414)			1.56 (39.7)	1.56 (39.7)			0.80 (20.4)			
NF□□-MTS16-9-G	16 mm Tube Socket Weld											
NF□□-MTS18-9-G	18 mm Tube Socket Weld											
NF□□-TS12-9-G	3/4" Tube Socket Weld											
NF□□-PS8-9-G	1/2 Pipe Socket Weld											
NF□□-MTB16-9-G	16×2.25 mm Tube Butt Weld											
NF□□-UMB14-9	14×2.5 mm Rotatable Tube Butt Weld		0.35 (9.0)	1.8	2.98 (75.7)	2.98 (75.7)			0.76 (19.4)			
NF□□-UMB16-9	16×2.8 mm Rotatable Tube Butt Weld											
NF□□-MS27-9	M27 x 2 Male Metric		0.39 (10.0)	2.18	1.56 (39.7)	1.56 (39.7)						
NF□□-FNS12-6	3/4 Female NPT		0.59 (15.0)	3.27	1.97 (50.0)	1.97 (50.0)	5.00 (127)	5.00 (127)	1.08 (27.5)	1.61 (41.0)	0.38 (9.7)	1.45 (36.8)
NF□□-TS16-6-G	1" Tube Socket Weld											
NF□□-MTS25-6-G	25 mm Tube Socket Weld											
NF□□-MTS28-6-G	28 mm Tube Socket Weld	5500 (379)										
NF□□-PS12-6-G	3/4 Pipe Socket Weld	6000 (414)										
NF□□-PB12-6-G	3/4×SCH80 Pipe Butt Weld											
NF□□-FL12-6	3/4" FITOK	5800 (400)			2.35 (59.7)	2.35 (59.7)						
NF□□-ML20-6	20 mm FITOK	5510 (380)										
NF□□-TS16-0-G	1" Tube Socket Weld	6000 (414)	0.71 (18.0)	5.65	1.97 (50.0)	1.97 (50.0)	5.33 (135.4)	5.00 (127)	1.08 (27.5)	1.61 (41.0)	0.38 (9.7)	1.45 (36.8)
NF□□-MTS25-0-G	25 mm Tube Socket Weld											
NF□□-MTS28-0-G	28 mm Tube Socket Weld	5500 (379)										
NF□□-PS12-0-G	3/4 Pipe Socket Weld	6000 (414)										
NF□□-PB16-0-G	1×SCH80 Pipe Butt Weld	5720 (394)										

1. Connection type of "FITOK" means FITOK double ferrule tube fittings. When the connection type of valves is FITOK double ferrule tube fitting, the working pressures of the valves are related to the wall thickness of tubing applied. For specific working pressure of the valves, please refer to the allowable working pressures in FITOK Catalog Tubing.
2. Connection type of "FO"means O-ring face seal fittings."FR"means metal gasket face seal fittings.
3. Sizes and types listed are standard. Other sizes and types are available upon request. For details, please contact FITOK Group or our authorized distributors.
4. Dimensions are shown with FITOK tube fitting nuts finger-tight. All dimensions are for reference only and are subject to change. For dimensions not shown above, please contact FITOK Group or our authorized distributors.

Straight Pattern

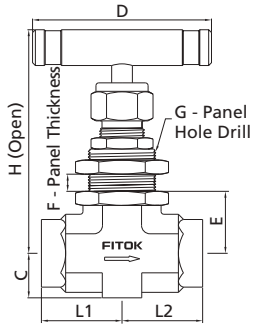

Angle Pattern

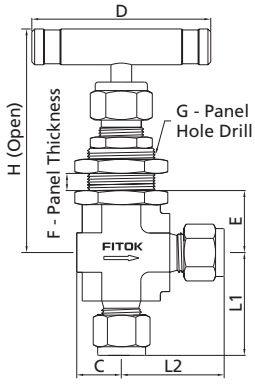

◎ NFH Series Needle Valves are standard without panel mounting. To order needle valves with panel mounting as illustrated, add -**Y** to the ordering number. Example: NFHSS-FNS2-7-**Y**

Dimensions of NFH Series

Basic Ordering Number	Connection Type and Size	Connection Pressure at 100°F (38°C) psig (bar)	Orifice in.(mm)	Cv	Dimensions, in.(mm)							
	Inlet/Outlet	316 SS			L1	L2	H	D	C	E	F	G
NFH□□-FL4-7	1/4" FITOK	10000 (690)	0.16 (4.0)	0.35	1.41 (35.8)	1.41 (35.8)	2.85 (72.5)	2.17 (55)	0.62 (15.8)	0.76 (19.4)	0.25 (6.4)	0.77 (19.6)
NFH□□-FNS2-7	1/8 Female NPT				1.00 (25.4)	1.00 (25.4)						
NFH□□-FNS4-7	1/4 Female NPT				1.06 (26.2)	1.06 (26.2)						
NFH□□-NS4-7	1/4 Male NPT				1.22 (30.9)	1.22 (30.9)						
NFH□□-FNS4-NS4-7	1/4 Female NPT/ 1/4 Male NPT				1.06 (26.2)	1.22 (30.9)						
NFH□□-TS4-7-G	1/4" Tube Socket Weld				1.06 (26.2)	1.06 (26.2)						
NFH□□-FNS4-8	1/4 Female NPT		0.25 (6.4)	0.85	1.12 (28.6)	1.12 (28.6)	3.38 (85.8)	2.50 (63.5)	0.76 (19.4)	0.87 (22.0)	0.38 (9.7)	0.96 (24.4)
NFH□□-FNS6-8	3/8 Female NPT	9000 (620)										
NFH□□-NS6-8	3/8 Male NPT				1.50 (38. 1)	1.50 (38.1)						
NFH□□-TS8-9-G	1/2" Tube Socket Weld	10000 (690)	0.39 (10.0)	2.18	1.56 (39.7)	1.56 (39.7)	3.86 (98.0)	3.50 (88.9)	0.76 (19.4)	1.10 (28.3)	0.38 (9.7)	1.08 (27.5)
NFH□□-MTS16-9-G	16 mm Tube Socket Weld								0.80 (20.4)			
NFH□□-MTB25-9-G	25×5.5 mm Tube Butt Weld											
NFH□□-FNS8-9	1/2 Female NPT						4.16 (105.7)		0.88 (22.2)			

1. Connection type of "FITOK" means FITOK double ferrule tube fittings. When the connection type of valves is FITOK double ferrule tube fitting, the working pressures of the valves are related to the wall thickness of tubing applied. For specific working pressure of the valves, please refer to the allowable working pressures in FITOK Tubing catalog.
2. Sizes and types listed are standard. Other sizes and types are available upon request. For details, please contact FITOK Group or our authorized distributors.
3. Dimensions are shown with FITOK tube fitting nuts finger-tight. All dimensions are for reference only and are subject to change. For dimensions not shown above, please contact FITOK Group or our authorized distributors.

Ordering Number Description

NFS4 - TS16 - MTS25 - 6WR - GYM - ASF2

Series	Body Material	Inlet Type	Inlet Size	Outlet Type	Outlet Size	Orifice Size	Stem Tip Material	Stem Tip Type	Packing Material	Panel Mounting	Handle	Flow Pattern	Special Application	Cleaning and Packaging

Series	
NF	
NFH	

Body Material	
SS	316 SS
6L	316L SS
S4	304 SS
4L	304L SS
S1	321 SS
91	F91
92	F92
D5	Duplex 2205
TI	Titanium
A20	Alloy 20
M	Alloy 400
INC	Alloy 600
HC	Alloy C -276
B	Brass
CS	Carbon Steel
904L	904L SS

Inlet Type	
FNS	Female NPT
NS	Male NPT
FRT	Female BSPT
RT	Male BSPT
FMS	Female Metric Thread (for RG-M)
MS	Male Metric Thread (for RG-M)
FRP	Female BSPP (for RP)
BP	Male BSPP (for RG)
TS	Fractional Tube Socket Weld
MTS	Metric Tube Socket Weld
TB	Fractional Tube Butt Weld
MTB	Metric Tube Butt Weld
PS	Pipe Socket Weld
PB	Pipe Butt Weld
FL	Fractional Tube Fitting
ML	Metric Tube Fitting
UFB	Rotatable Fractional Tube Butt Weld
UMB	Rotatable Metric Tube Butt Weld
UPB	Rotatable Pipe Butt Weld
FO	Male FO Fitting
FR	Male FR Fitting

Inlet Size	
2	1/8"
4	1/4"
6	3/8" or 6 mm
8	1/2" or 8 mm
10	10 mm
12	3/4" or 3/4"×SCH80 or 12 mm
14	14 mm or 14×2.5 mm or M14×1.5
16	1" or 1"×SCH80 or 16 mm or 16×2.25 mm or 16×2.8 mm
18	18 mm
20	20 mm or M20 x 1.5
22	22 mm or M22 x 1.5
24	M24 x 1.5
25	25 mm or 25×5.5 mm
27	M27 x 2
28	28 mm

Outlet Type	Outlet Size
	Same as Inlet

Specified in the same way as inlet type and inlet size

Orifice Size	
7	0.16" (4.0 mm)
8	0.25" (6.4 mm)
9	0.39" (10 mm)
6	0.59" (15 mm)
0	0.71" (18 mm)

Only NF series

Stem Tip Material	
	Same as Body
W	Stellite
D5	Duplex 2205
TI	Titanium
A20	Alloy 20
M	Alloy 400
INC	Alloy 600
HC	Alloy C-276

Stem Tip Type	
	Taper
R	Regulating
B	Ball
T	Soft Tip-PTFE
K	Soft Tip-PCTFE

Soft stem tip only for NF Series Needle Valves with the orifice 0.16"/4.0mm, 0.25"/6.4mm and 0.39"/10mm

Packing Material	
	PTFE
P	PEEK
G	Graphite

Panel Mounting	
	No
Y	Yes

Handle	
	Black Aluminum Bar
I	Red Aluminum Bar
GR	Green Aluminum Bar
J	Blue Aluminum Bar
M	Stainless Steel Bar
B	Black Knob (only for NF Series Needle Valves with the orifice 0.16"/4.0mm and 0.25"/6.4mm)

Flow Pattern	
	Straight
A	Angle

Special Application	
	No
S	NACE MR0175
SI	SilcoNert® 2000 (Sulfinert®) Coating

Cleaning and Packaging	
	FC-01
F2	FC-02

Note: "Ordering Number Description" is a reference to understand the combination rules of FITOK product part number. Not all combinations are available.

1. Standard thread pitch for metric threads are as follows:
   M10 and below: 1 mm
   M12 to M24: 1.5 mm
   M27 and above: 2 mm
2. FO means FITOK O-ring face seal fittings.
3. FR means FITOK metal gasket face seal fittings.
4. Cleaning and Packaging:
   FC-01: Standard cleaning and packaging for general industrial procedures.
   FC-02: Special cleaning and packaging for wetted system components to ensure compliance with product cleanliness requirement of ASTM G93 Level C.
5. Special Application:
   Plural special application designators available in one ordering number, example: NFSS-NS4-7-SSI.
   SilcoNert® 2000 (Sulfinert®) coating: Wetted metal components SilcoNert® 2000 (Sulfinert®) coated.

Integral Bonnet Needle Valves

NG Series: Working pressure up to 3000 psig
NGH Series: Working pressure up to 5000 psig

Features

- ◎ One-piece forged body
- ◎ Easy external adjustments by packing nut
- ◎ Live-loaded packing system
- ◎ Handles of different colors available
- ◎ Compact design
- ◎ Panel mounting available
- ◎ Every valve leak tested with nitrogen or compressed air at the maximum allowable working pressure
- ◎ Working pressure up to:
  NG Series—Stainless steel, Brass, Alloy 400: 3000 psig (207 bar)
  NGH Series—Stainless steel: 5000 psig (345 bar)
- ◎ Working temperature:
  PTFE: -65°F to 450°F (-54°C to 232°C)
  PEEK: -65°F to 500°F (-54°C to 260°C)



Pressure vs. Temperature

NG Series

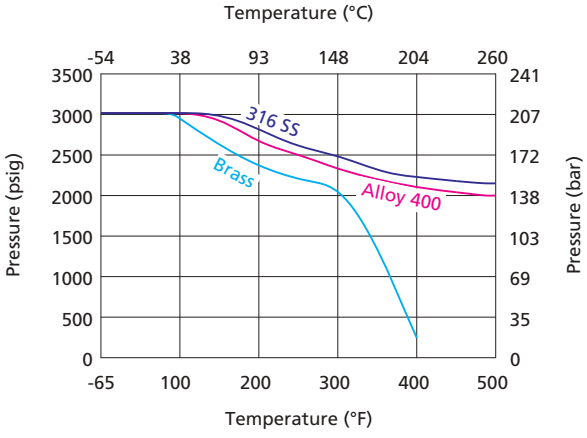

NGH Series

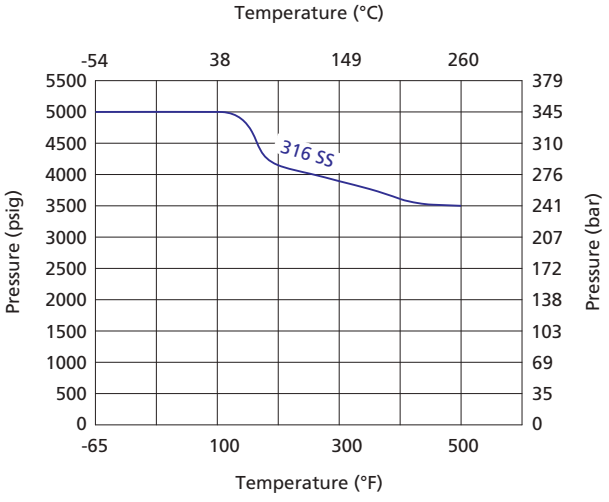

1. Graphs are based on PEEK packing.
2. Temperature rating is limited to 200°F (93°C) max with PCTFE stem tip (soft tip).
3. Contact FITOK Group or our authorized distributors for curve graph of other materials.

Flow Data at 100°F (38°C)

Regulating Stem Tip

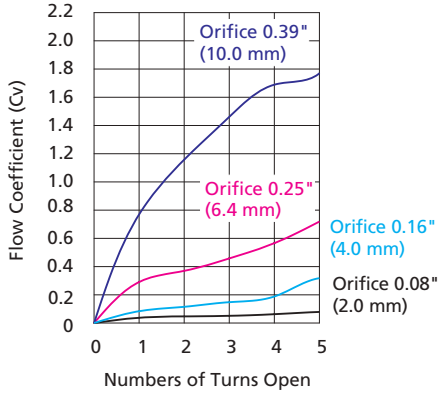

Standard Materials of Construction

Panel Mounting

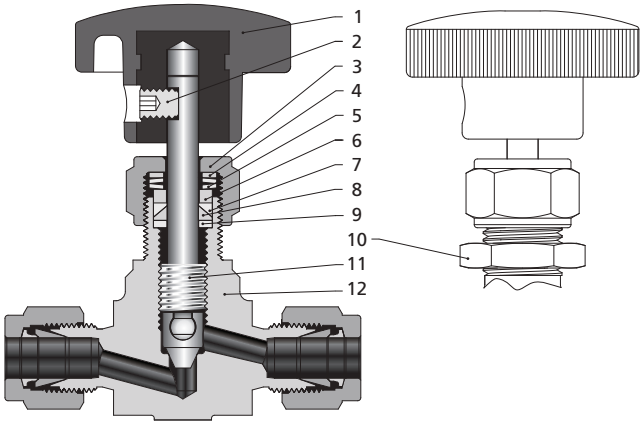

Stem Tip Type

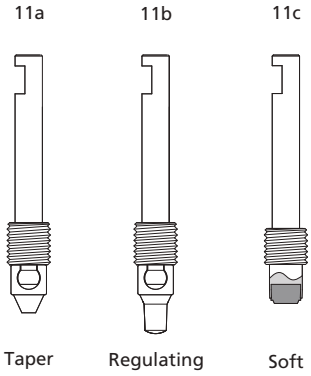

Item	Component	Valve Body Material		
		316 SS	Brass	Alloy 400
		Material Grade/ASTM Specification		
1	Handle	Black knob (aluminum or nylon with copper insert), aluminum alloy or stainless steel bar handle		
2	Set Screw	Zinc-plated carbon steel		
3	Packing Bolt	304 SS/A479	Brass C36000/B16	304 SS/A479
4	Washer	316 SS/A479		
5	Packing Spring	S17700/A693		
6	Washer	316 SS/A479		
7	Upper Packing	PTFE/PEEK		
8	Lower Packing			
9	Packing Washer		316 SS/A479	Alloy 400/B164
10	Panel Nut	Stainless steel	Brass C36000/B16	Stainless steel
11a	Stem	316 SS/A479		Alloy 400/B164
11b	Stem Tip	Hardened 316 SS/A479		Alloy 400/B164
11c	Stem	316 SS/A479		Alloy 400/B164
	Stem Tip	PCTFE or PEEK		
12	Body	316 SS/A182	Brass C37700/B283	Alloy 400/B564
	Lubricant	Molybdenum disulfide-based		

Note: Contact FITOK Group or our authorized distributors for other materials.

Dimensions

Straight Pattern

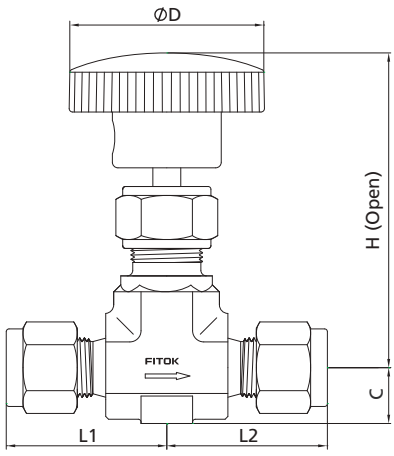

Angle Pattern

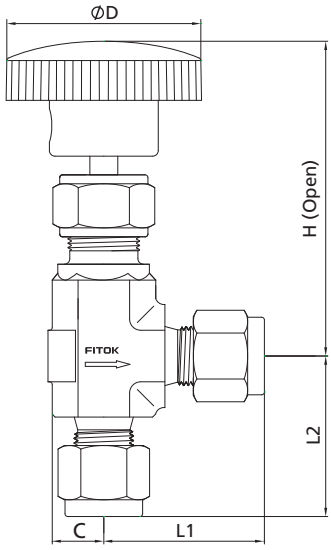

Dimensions of NG Series

Basic Ordering Number	Connection Type and Size		Orifice in.(mm)	Cv	Dimensions, in.(mm)				
	Inlet	Outlet			L1	L2	C	D	H
NG□□-NS2-5	1/8 Male NPT	1/8 Male NPT	0.08 (2.0)	0.09	0.75 (19.05)	0.75 (19.05)	0.32 (8.2)	1.00 (25.4)	2.30 (58.4)
NG□□-FNS2-5	1/8 Female NPT	1/8 Female NPT			0.81 (20.6)	0.81 (20.6)			
NG□□-FL2-5	1/8" FITOK	1/8" FITOK			0.98 (25.0)	0.98 (25.0)			
NG□□-ML3-5	3 mm FITOK	3 mm FITOK							
NG□□-FNS2-7	1/8 Female NPT	1/8 Female NPT	0.16 (4.0)	0.35	0.81 (20.6)	0.81 (20.6)	0.39 (10.0)	1.38 (35.0)	2.46 (62.5)
NG□□-NS4-7	1/4 Male NPT	1/4 Male NPT			0.98 (25.0)	0.98 (25.0)			
NG□□-FL4-7	1/4" FITOK	1/4" FITOK			1.13 (28.7)	1.13 (28.7)			
NG□□-ML6-7	6 mm FITOK	6 mm FITOK							
NG□□-ML8-7	8 mm FITOK	8 mm FITOK			1.17 (29.7)	1.17 (29.7)			
NG□□-UMB6-7	6×1.8 mm Rotatable Tube Butt Weld	6×1.8 mm Rotatable Tube Butt Weld			2.24 (57.0)	2.24 (57.0)			
NG□□-FNS4-8	1/4 Female NPT	1/4 Female NPT	0.25 (6.4)	0.70	1.06 (26.9)	1.06 (26.9)	0.49 (12.5)	1.88 (47.8)	2.85 (72.4)
NG□□-FNS6-8	3/8 Female NPT	3/8 Female NPT					0.62 (15.8)		2.90 (73.7)
NG□□-NS6-8	3/8 Male NPT	3/8 Male NPT			1.12 (28.4)	1.12 (28.4)	0.49 (12.5)		2.85 (72.4)
NG□□-NS8-8	1/2 Male NPT	1/2 Male NPT			1.50 (38.1)	1.50 (38.1)	0.62 (15.8)		2.90 (73.7)
NG□□-FL6-8	3/8" FITOK	3/8" FITOK			1.29 (32.8)	1.29 (32.8)	0.49 (12.5)		2.85 (72.4)
NG□□-FL8-8	1/2" FITOK	1/2" FITOK			1.40 (35.6)	1.40 (35.6)			
NG□□-ML10-8	10 mm FITOK	10 mm FITOK			1.30 (33.0)	1.30 (33.0)			
NG□□-ML12-8	12 mm FITOK	12 mm FITOK			1.40 (35.6)	1.40 (35.6)			
NG□□-ML14-8	14 mm FITOK	14 mm FITOK			1.56 (39.7)	1.56 (39.7)	0.62 (15.8)		2.90 (73.7)
NG□□-MS20-8	M20 x 1.5 Male Metric	M20 x 1.5 Male Metric			1.50 (38.1)	1.50 (38.1)			
NG□□-UMB10-8	10×2.2 mm Rotatable Tube Butt Weld	10×2.2 mm Rotatable Tube Butt Weld			2.60 (66.0)	2.60 (66.0)	0.49 (12.5)		2.85 (72.4)
NG□□-UMB14-8	14×2.5 mm Rotatable Tube Butt Weld	14×2.5 mm Rotatable Tube Butt Weld							

Dimensions of NG Series

Basic Ordering Number	Connection Type and Size		Orifice in.(mm)	Cv	Dimensions, in.(mm)				
	Inlet	Outlet			L1	L2	C	D	H
NG□□-FNS8-9-L	1/2 Female NPT	1/2 Female NPT	0.39 (10.0)	1.80	1.50 (38.1)	1.50 (38.1)	0.76 (19.4)	3.50 (88.9)	3.37 (85.7)
NG□□-FNS12-9-L	3/4 Female NPT	3/4 Female NPT			1.56 (39.7)	1.56 (39.7)	0.80 (20.4)		
NG□□-NS12-9-L	3/4 Male NPT	3/4 Male NPT			1.56 (39.7)	1.56 (39.7)	0.76 (19.4)		
NG□□-FL8-9-L	1/2" FITOK	1/2" FITOK			1.90 (48.3)	1.90 (48.3)	0.76 (19.4)		
NG□□-FL12-9-L	3/4" FITOK	3/4" FITOK							
NG□□-ML14-9-L	14 mm FITOK	14 mm FITOK							

1. Connection type of "FITOK" means FITOK double ferrule tube fittings. When the connection type of valves is FITOK double ferrule tube fitting, the working pressures of the valves are related to the wall thickness of used tubing. For specific working pressure of the valves, please refer to the allowable working pressures in FITOK Catalog Tubing.
2. Sizes and types listed are standard. Other sizes and types are available upon request. For details, please contact FITOK Group or our authorized distributors.
3. Dimensions are shown with FITOK tube fitting nuts finger-tight. All dimensions are for reference only and are subject to change. For dimensions not shown above, please contact FITOK Group or our authorized distributors.

Panel Mount Dimensions of NG Series

Orifice in.(mm)	Dimensions, in.(mm)	
	E	F
0.08 (2.0)	0.44 (11.2)	0.47 (11.9)
0.16 (4.0)	0.44 (11.2)	0.53 (13.5)
0.25 (6.4)	0.50 (12.7)	0.78 (19.8)
0.39 (10.0)	0.75 (19.1)	1.03 (26.2)

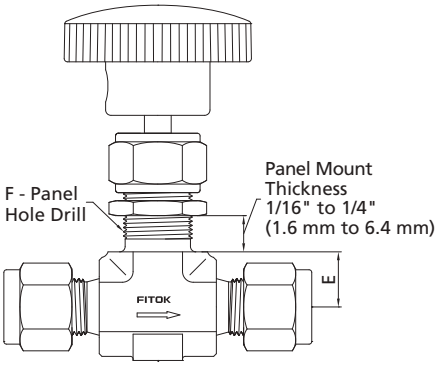

1. NG Series Needle Valves are standard without panel mounting.
2. To order needle valves with panel mounting as illustrated, add -**Y** to the ordering number. Example: NGSS-NS2-5-**Y**

Straight Pattern

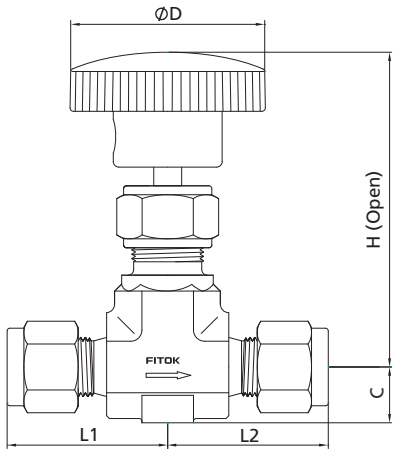

Angle Pattern

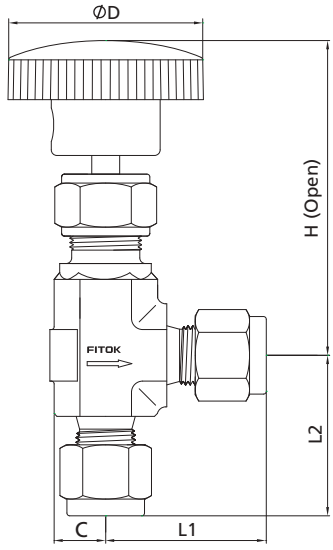

Dimensions of NGH Series

Basic Ordering Number	Connection Type and Size		Orifice in.(mm)	Cv	Dimensions, in.(mm)				
	Inlet	Outlet			L1	L2	C	D	H
NGH□□-NS2-5	1/8 Male NPT	1/8 Male NPT	0.08 (2.0)	0.09	0.75 (19.0)	0.75 (19.0)	0.32 (8.2)	1.00 (25.4)	2.30 (58.4)
NGH□□-FNS2-5	1/8 Female NPT	1/8 Female NPT			0.81 (20.6)	0.81 (20.6)			
NGH□□-FL2-5	1/8" FITOK	1/8" FITOK			0.98 (25.0)	0.98 (25.0)			
NGH□□-ML3-5	3 mm FITOK	3 mm FITOK							
NGH□□-FNS2-7	1/8 Female NPT	1/8 Female NPT	0.16 (4.0)	0.35	0.81 (20.6)	0.81 (20.6)	0.39 (10.0)	1.38 (35.0)	2.46 (62.5)
NGH□□-NS4-7	1/4 Male NPT	1/4 Male NPT			0.98 (25.0)	0.98 (25.0)			
NGH□□-FL4-7	1/4" FITOK	1/4" FITOK			1.13 (28.7)	1.13 (28.7)			
NGH□□-ML6-7	6 mm FITOK	6 mm FITOK							
NGH□□-ML8-7	8 mm FITOK	8 mm FITOK			1.17 (29.7)	1.17 (29.7)			
NGH□□-UMB6-7	6×1.8 mm Rotatable Tube Butt Weld	6×1.8 mm Rotatable Tube Butt Weld			2.24 (57.0)	2.24 (57.0)			
NGH□□-FNS4-8	1/4 Female NPT	1/4 Female NPT	0.25 (6.4)	0.70	1.06 (26.9)	1.06 (26.9)	0.49 (12.5)	1.88 (47.8)	2.85 (72.4)
NGH□□-FNS6-8	3/8 Female NPT	3/8 Female NPT					0.62 (15.8)		2.90 (73.7)
NGH□□-NS6-8	3/8 Male NPT	3/8 Male NPT			1.12 (28.4)	1.12 (28.4)	0.49 (12.5)		2.85 (72.4)
NGH□□-NS8-8	1/2 Male NPT	1/2 Male NPT			1.50 (38.1)	1.50 (38.1)	0.62 (15.8)		2.90 (73.7)
NGH□□-FL6-8	3/8" FITOK	3/8" FITOK			1.29 (32.8)	1.29 (32.8)	0.49 (12.5)		2.85 (72.4)
NGH□□-FL8-8	1/2" FITOK	1/2" FITOK			1.40 (35.6)	1.40 (35.6)			
NGH□□-ML10-8	10 mm FITOK	10 mm FITOK			1.30 (33.0)	1.30 (33.0)			
NGH□□-ML12-8	12 mm FITOK	12 mm FITOK			1.40 (35.6)	1.40 (35.6)			
NGH□□-ML14-8	14 mm FITOK	14 mm FITOK			1.56 (39.7)	1.56 (39.7)	0.62 (15.8)		2.90 (73.7)
NGH□□-MS20-8	M20 x 1.5 Male Metric	M20 x 1.5 Male Metric			1.50 (38.1)	1.50 (38.1)			
NGH□□-UMB10-8	10×2.2 mm Rotatable Tube Butt Weld	10×2.2 mm Rotatable Tube Butt Weld			2.60 (66.0)	2.60 (66.0)	0.49 (12.5)		2.85 (72.4)
NGH□□-UMB14-8	14×2.5 mm Rotatable Tube Butt Weld	14×2.5 mm Rotatable Tube Butt Weld							

Dimensions of NGH Series

Basic Ordering Number	Connection Type and Size		Orifice in.(mm)	Cv	Dimensions, in.(mm)				
	Inlet	Outlet			L1	L2	C	D	H
NGH□□-FNS8-9-L	1/2 Female NPT	1/2 Female NPT	0.39 (10.0)	1.80	1.50 (38.1)	1.50 (38.1)	0.76 (19.4)	3.50 (88.9)	3.37 (85.7)
NGH□□-NS12-9-L	3/4 Male NPT	3/4 Male NPT			1.56 (39.7)	1.56 (39.7)	0.76 (19.4)		
NGH□□-FL8-9-L	1/2" FITOK	1/2" FITOK			1.90 (48.3)	1.90 (48.3)	0.76 (19.4)		
NGH□□-FL12-9-L	3/4" FITOK	3/4" FITOK							
NGH□□-ML14-9-L	14 mm FITOK	14 mm FITOK							

1. Connection type of "FITOK" means FITOK double ferrule tube fittings. When the connection type of valves is FITOK double ferrule tube fitting, the working pressures of the valves are related to the wall thickness of tubing applied. For specific working pressure of the valves, please refer to the allowable working pressures in FITOK Catalog Tubing.
2. Sizes and types listed are standard. Other sizes and types are available upon request. For details, please contact FITOK Group or our authorized distributors.
3. Dimensions are shown with FITOK tube fitting nuts finger-tight. All dimensions are for reference only and are subject to change. For dimensions not shown above, please contact FITOK Group or our authorized distributors.

Panel Mount Dimensions of NGH Series

Orifice in.(mm)	Dimensions, in.(mm)	
	E	F
0.08 (2.0)	0.44 (11.2)	0.47 (11.9)
0.16 (4.0)	0.44 (11.2)	0.53 (13.5)
0.25 (6.4)	0.50 (12.7)	0.78 (19.8)
0.39 (10.0)	0.75 (19.1)	1.03 (26.2)

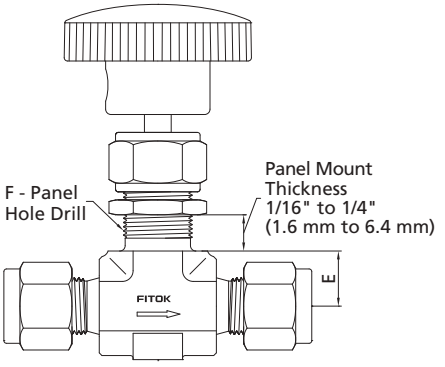

1. NGH Series Needle Valves are standard without panel mounting.
2. To order needle valves with panel mounting as illustrated, add -**Y** to the ordering number. Example: NGHSS-NS2-5-**Y**

Ordering Number Description

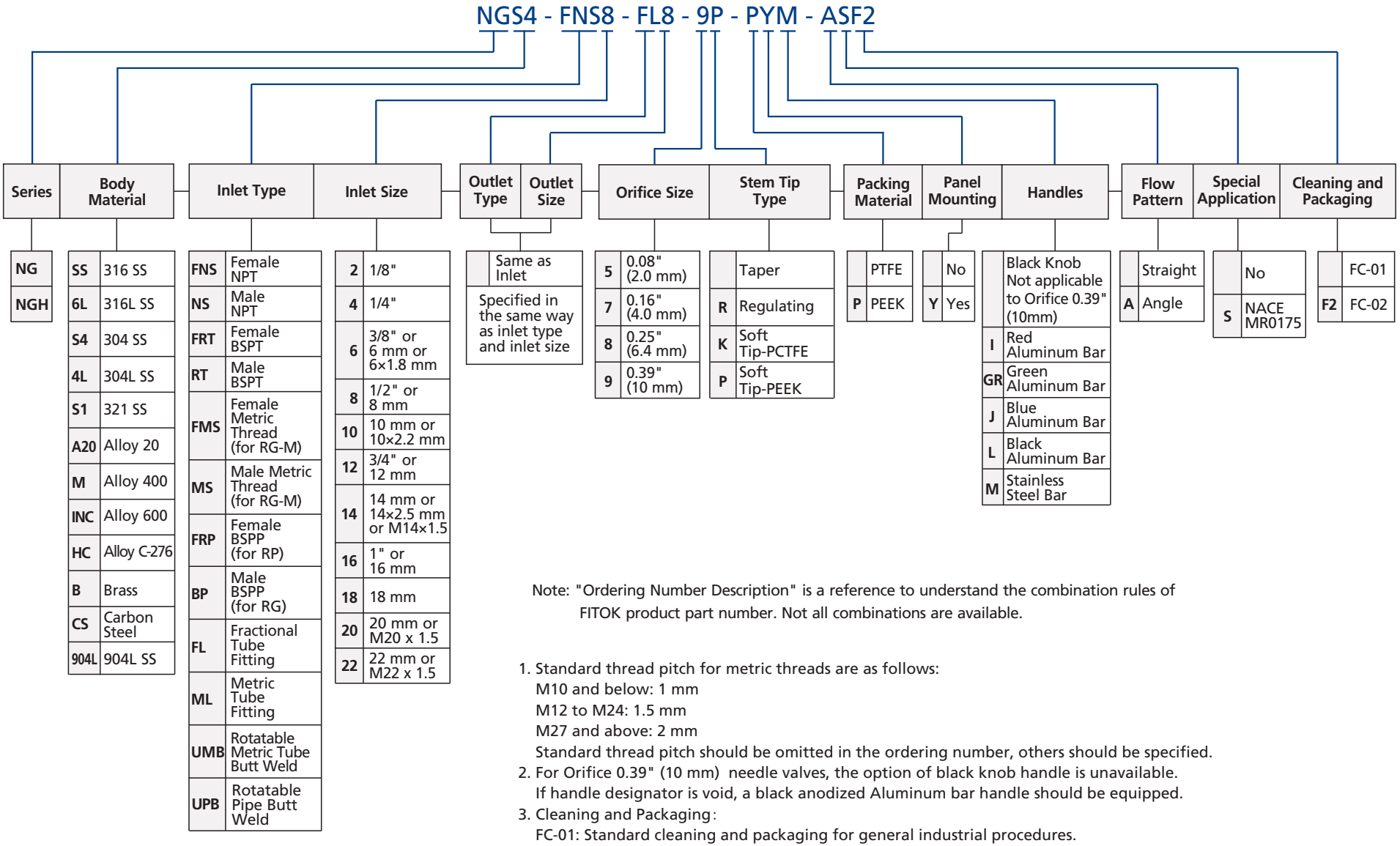

Note: "Ordering Number Description" is a reference to understand the combination rules of FITOK product part number. Not all combinations are available.

1. Standard thread pitch for metric threads are as follows:
   M10 and below: 1 mm
   M12 to M24: 1.5 mm
   M27 and above: 2 mm
   Standard thread pitch should be omitted in the ordering number, others should be specified.
2. For Orifice 0.39" (10 mm) needle valves, the option of black knob handle is unavailable.
   If handle designator is void, a black anodized Aluminum bar handle should be equipped.
3. Cleaning and Packaging:
   FC-01: Standard cleaning and packaging for general industrial procedures.
   FC-02: Special cleaning and packaging for wetted system components to ensure compliance with product cleanliness requirement of ASTM G93 Level C.

Rising Plug Valves

NR Series
NRG (with gauge port) Series

Features

- Cold drawn square bar as body material
- Nonrotating stem for longer seat life
- Roddable, straight through flow path for maximum flow with minimum pressure drop
- Stem thread lubricant isolated from system media
- Replaceable seat and stem tip design
- Stem thread protected from outside contamination by PTFE ring in the gland
- Panel mounting available
- Handles of different colors available
- Every valve leak tested with nitrogen or compressed air at the maximum allowable working pressure
- Working pressure up to:
  Stainless steel: 6000 psig (414 bar)
  Alloy 400: 5000 psig (345 bar)
- Working temperature with seat:
  Acetal: -20°F to 250°F (-28°C to 121°C)
  PEEK: -20°F to 450°F (-28°C to 232°C)
- Working temperature with O-ring:
  Fluorocarbon Rubber (FKM): -20°F to 400°F (-28°C to 204°C)
  Nitrile Butadiene Rubber (NBR): -20°F to 212°F (-28°C to 100°C)
  Ethylene Propylene Diene Rubber (EPDM): -20°F to 300°F (-28°C to 148°C)



Pressure vs. Temperature

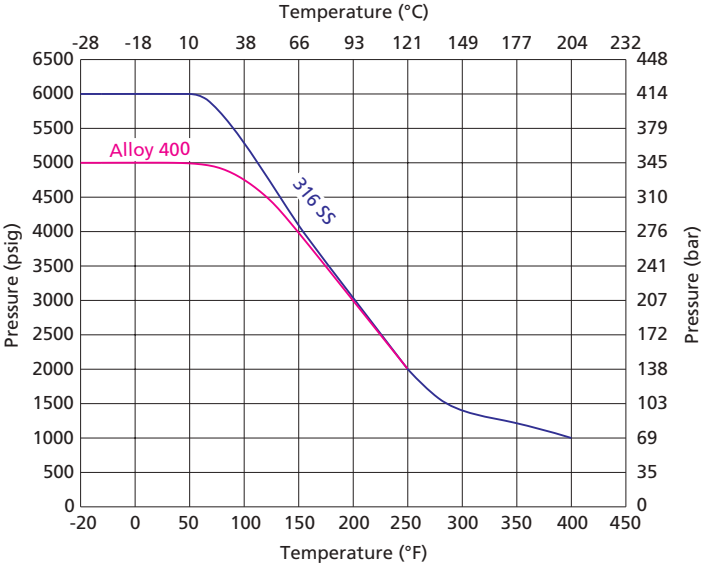

Flow Data at 100°F (38°C)

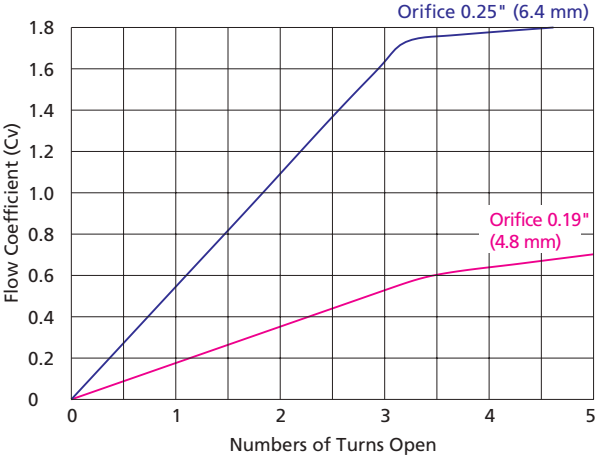

1. Graphs are based on PEEK seat and Fluorocarbon(FKM) O-ring.
2. Contact FITOK Group or our authorized distributors for curve graph of other materials.

Standard Materials of Construction

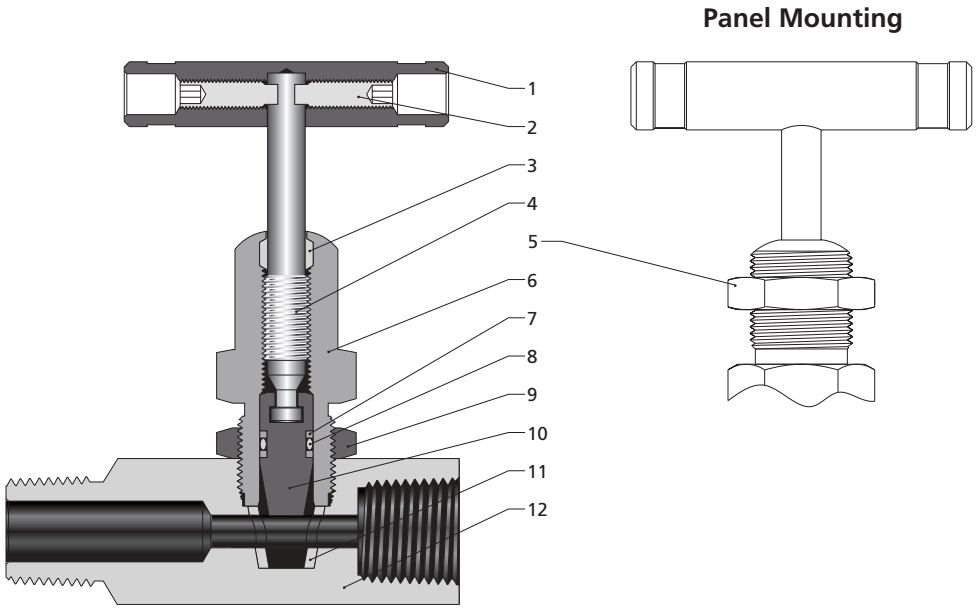

Item	Component	Valve Body Material			
		316 SS	304 SS	321 SS	Alloy 400
		Material Grade/ASTM Specification			
1	Handle	Anodized aluminum or stainless steel or black knob			
2	Set Screw	Zinc-plated carbon steel			
3	Wiper Ring	PTFE/D1710			
4	Upper Stem	316 SS/A479			Alloy 400/B164
5	Panel Nut	Stainless steel			
6	Bonnet	316 SS/A479	304 SS/A479	321 SS/A479	Alloy 400/B164
7	Backup Ring	PTFE/D1710			
8	O-ring	Fluorocarbon Rubber (FKM), Nitrile Butadiene Rubber (NBR) or Ethylene Propylene Diene Rubber (EPDM)			
9	Lock Nut	Stainless steel			
10	Stem Tip	316 SS/A479	304 SS/A479	321 SS/A479	Alloy 400/B164
11	Seat	Acetal or PEEK			
12	Body	316 SS/A479	304 SS/A479	321 SS/A479	Alloy 400/B164
	Lubricant	Molybdenum disulfide-based			

Note: Contact FITOK Group or our authorized distributors for other materials.

Dimensions

Standard Pattern

NR Series

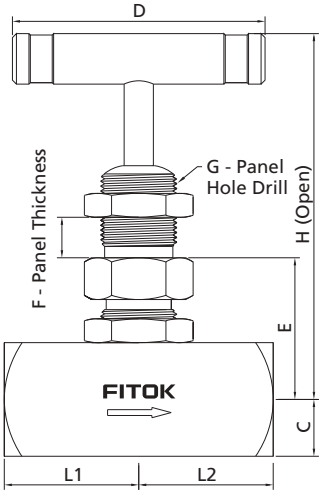

Gauge Port Pattern

NRG Series

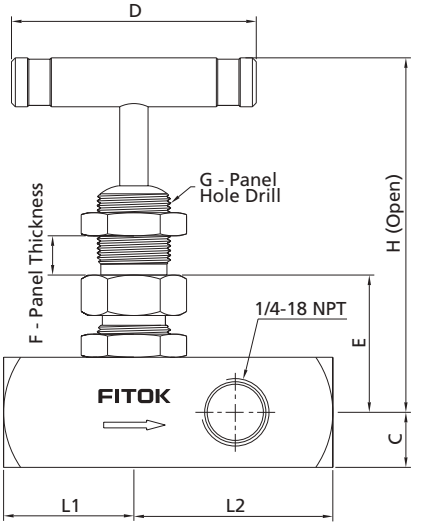

◎ NR Series Needle Valves are standard without panel mounting. To order needle valves with panel mounting as illustrated, add -**Y** to the ordering number. Example: NRSS-FNS4-7-**Y**

Dimensions of NR and NRG Series

Basic Ordering Number	Connection Type and Size		Orifice in.(mm)	Cv	Dimensions, in.(mm)							
	Inlet	Outlet			L1	L2	C	D	E	F	G	H
NR□□-FNS4-7	1/4 Female NPT	1/4 Female NPT	0.19 (4.8)	0.63	1.12 (28.4)	1.12 (28.4)	0.44 (11.1)	2.17 (55.0)	1.28 (32.5)	0.38 (9.7)	0.77 (19.6)	3.77 (95.8)
NR□□-NS4-FNS4-7	1/4 Male NPT	1/4 Female NPT			1.78 (45.2)		0.50 (12.7)		1.34 (34.0)			
NR□□-NS8-FNS4-7	1/2 Male NPT	1/4 Female NPT			1.89 (48.0)							
NRG□□-FNS4-7	1/4 Female NPT	1/4 Female NPT			1.12 (28.4)	1.75 (44.4)						
NRG□□-NS8-FNS4-7	1/2 Male NPT	1/4 Female NPT			3.12 (79.2)							
NR□□-FNS8-8	1/2 Female NPT	1/2 Female NPT	0.25 (6.4)	1.80	1.33 (33.8)	1.33 (33.8)	0.56 (14.3)	2.50 (63.5)	1.40 (35.5)	0.38 (9.7)	0.77 (19.6)	3.83 (97.3)
NR□□-NS8-FNS8-8	1/2 Male NPT	1/2 Female NPT			2.16 (54.9)							
NR□□-NS12-FNS8-8	3/4 Male NPT	1/2 Female NPT										
NRG□□-FNS8-8	1/2 Female NPT	1/2 Female NPT			3.33 (84.6)	2.25 (57.2)						
NRG□□-NS12-FNS8-8	3/4 Male NPT	1/2 Female NPT										

1. Sizes and types listed are standard. Other sizes and types are available upon request.
2. For dimensions not shown above, please contact FITOK Group or our authorized distributors.

Ordering Number Description

NRSS - NS8 - FNS8 - P8 - BYM - SF2

Series
NR
NRG

Body Material	
SS	316 SS
6L	316L SS
S4	304 SS
4L	304L SS
S1	321 SS
D5	Duplex 2205
TI	Titanium
A20	Alloy 20
M	Alloy 400
INC	Alloy 600
HC	Alloy C -276
B	Brass
CS	Carbon Steel
904L	904L SS

Inlet Type	
FNS	Female NPT
NS	Male NPT
FRT	Female BSPT
RT	Male BSPT
FMS	Female Metric Thread (for RG-M)
MS	Male Metric Thread (for RG-M)
FRP	Female BSPP (for RP)
BP	Male BSPP (for RG)

Inlet Size	
2	1/8"
4	1/4"
6	3/8" or 6 mm
8	1/2" or 8 mm
10	10 mm
12	3/4" or 12 mm

Outlet Type / Outlet Size	
	Same as Inlet
Specified in the same way as inlet type and inlet size	

Seat Material	
	Acetal
P	PEEK

Orifice Size	
7	0.19" (4.8 mm)
8	0.25" (6.4 mm)

O-ring Material	
	Fluorocarbon Rubber (FKM)
B	Nitrile Butadiene Rubber (NBR)
E	Ethylene Propylene Diene Rubber (EPDM)

Panel Mounting	
	No
Y	Yes

Handle	
	Black Aluminum Bar
I	Red Aluminum Bar
GR	Green Aluminum Bar
J	Blue Aluminum Bar
M	Stainless Steel Bar

Special Application	
	No
S	NACE MR0175

Cleaning and Packaging	
	FC-01
F2	FC-02

Note: "Ordering Number Description" is a reference to understand the combination rules of FITOK product part number. Not all combinations are available.

1. Cleaning and Packaging:
   FC-01: Standard cleaning and packaging for general industrial procedures.
   FC-02: Special cleaning and packaging for wetted system components to ensure compliance with product cleanliness requirement of ASTM G93 Level C.

Toggle Valves

NT Series

Features



- One piece forged body
- Straight and angle patterns
- Compact design
- Quick opening or closing
- Nonrotating stem
- Panel mounting available
- Every valve leak tested with nitrogen or compressed air at the maximum allowable working pressure
- Working pressure up to: 300 psig (20.7 bar)

Technical Data

Orifice in. (mm)	Working Pressure at 100°F (38°C) psig (bar)
0.08 (2.0)	300 (20.7)
0.125 (3.2)	
0.25 (6.4)	200 (13.8)

O-ring Material	Temperature Rating
Fluorocarbon Rubber (FKM)	-20°F to 400°F (-28°C to 204°C)
Nitrile Butadiene Rubber (NBR)	-20°F to 212°F (-28°C to 100°C)
Ethylene Propylene Diene Rubber (EPDM)	-20°F to 300°F (-28°C to 148°C)

Standard Materials of Construction

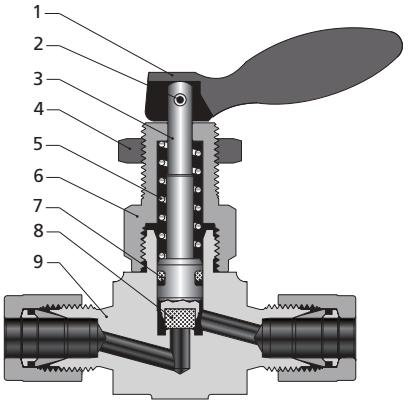

Item	Component	Valve Body Material			
		316 SS	304 SS	321 SS	Brass
		Material Grade/ASTM Specification			
1	Handle	Stainless steel			
2	Pin	Stainless steel			
3	Stem	316 SS/A479	304 SS/A479		316 SS/A479
4	Panel Nut	Stainless steel			Brass C36000/B16
5	Spring	S17700/A313			
6	Bonnet	304 SS/A479			Brass C36000/B16
7	O-ring	Fluorocarbon Rubber (FKM), Nitrile Butadiene Rubber (NBR) or Ethylene Propylene Diene Rubber (EPDM)			
8	Stem Tip	PTFE/D1710			
9	Body	316 SS/A182	304 SS/A182	321 SS/A182	Brass C37700/B283
	Lubricant	Molybdenum disulfide-based			

Note: Contact FITOK Group or our authorized distributors for other materials.

Dimensions

Straight Pattern

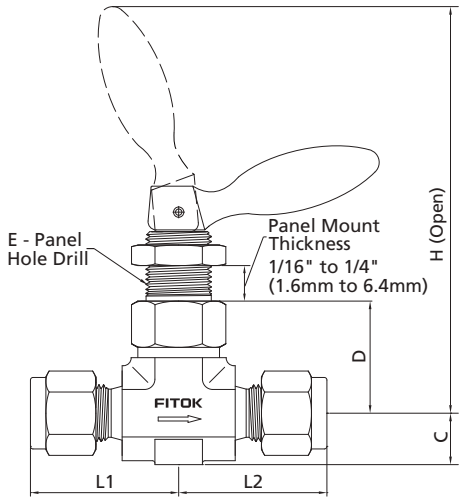

Angle Pattern

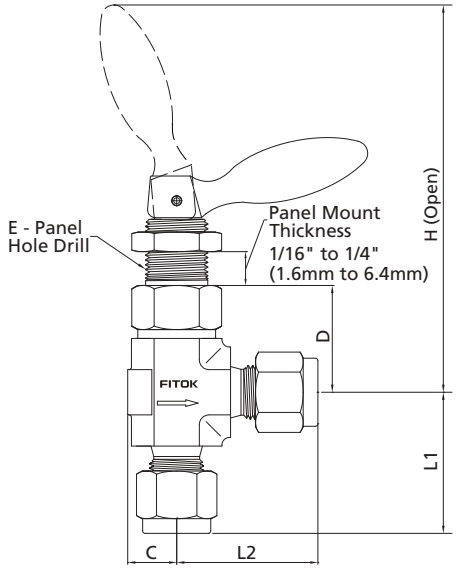

Dimensions of NT Series

Basic Ordering Number	Connection Type and Size		Orifice in.(mm)	Cv	Dimensions, in.(mm)					
	Inlet	Outlet			L1	L2	C	D	E	H
NT□□-NS2-5	1/8 Male NPT	1/8 Male NPT	0.08 (2.0)	0.11	0.75 (19.05)	0.75 (19.05)	0.32 (8.2)	0.85 (21.7)	0.53 (13.5)	2.83 (71.9)
NT□□-NS2-FL2-5	1/8 Male NPT	1/8" FITOK			0.75 (19.05)	0.98 (25.0)				
NT□□-FL2-5	1/8" FITOK	1/8" FITOK			0.98 (25.0)	0.98 (25.0)				
NT□□-ML3-5	3 mm FITOK	3 mm FITOK								
NT□□-FNS2-7	1/8 Female NPT	1/8 Female NPT	0.125 (3.2)	0.20	0.81 (20.6)	0.81 (20.6)	0.39 (10.0)	0.85 (21.7)	0.53 (13.5)	2.83 (71.9)
NT□□-NS2-7	1/8 Male NPT	1/8 Male NPT			0.86 (21.8)	0.86 (21.8)				
NT□□-NS4-7	1/4 Male NPT	1/4 Male NPT			0.98 (25.0)	0.98 (25.0)				
NT□□-NS4-FL4-7	1/4 Male NPT	1/4" FITOK			0.98 (25.0)	1.13 (28.7)				
NT□□-FL4-7	1/4" FITOK	1/4" FITOK			1.13 (28.7)					
NT□□-ML6-7	6 mm FITOK	6 mm FITOK								
NT□□-ML8-7	8 mm FITOK	8 mm FITOK								
NT□□-FNS4-8	1/4 Female NPT	1/4 Female NPT	0.25 (6.4)	0.70	1.06 (26.9)	1.06 (26.9)	0.53 (13.5)	1.06 (26.9)	0.66 (16.8)	3.59 (91.2)
NT□□-FNS6-8	3/8 Female NPT	3/8 Female NPT								
NT□□-NS6-8	3/8 Male NPT	3/8 Male NPT			1.12 (28.4)	1.12 (28.4)				
NT□□-FL6-8	3/8" FITOK	3/8" FITOK			1.29 (32.8)	1.29 (32.8)				
NT□□-FL8-8	1/2" FITOK	1/2" FITOK			1.40 (35.6)	1.40 (35.6)				
NT□□-ML10-8	10 mm FITOK	10 mm FITOK			1.36 (34.5)	1.36 (34.5)				
NT□□-ML12-8	12 mm FITOK	12 mm FITOK			1.46 (37.1)	1.46 (37.1)				

1. Connection type of "FITOK" means FITOK double ferrule tube fittings.
2. Sizes and types listed are standard. Other sizes and types are available upon request. For details, please contact FITOK Group or our authorized distributors.
3. Dimensions are shown with FITOK tube fitting nuts finger-tight. All dimensions are for reference only and are subject to change. For dimensions not shown above, please contact FITOK Group or our authorized distributors.

Pneumatic Actuators

Normally Closed and Double Acting

Normally Open



Features

- ◎ Valve and actuator are fully assembled and every valve leak tested with nitrogen or compressed air at the maximum allowable working pressure
- ◎ Opens and closes quickly and reliably
- ◎ Rotatable actuator port allows easy installation

Actuation Modes

- ◎ Normally closed—air opens, spring closes
- ◎ Normally open—air closes, spring opens
- ◎ Double acting—air opens and closes

Technical Data

Actuator Type	Working Pressure at 100°F (38°C) psig (bar)	Actuator Pressure Rating psig (bar)
Normally closed	300 (20.7)	87 (6)
Normally open	450 (31.0)	
Double acting		

Component	Material
	Material Grade/ASTM Specification
Housing	Anodized aluminum
Spring	S17700/A313
Mounting Bracket	304SS/A240
Stem Tip	Normally open, normally closed—PTFE/D1710, double acting—PCTFE/D1430

Please refer to NT Series "Standard Materials of Construction" for other materials.

Dimensions

Normally Closed and Double Acting

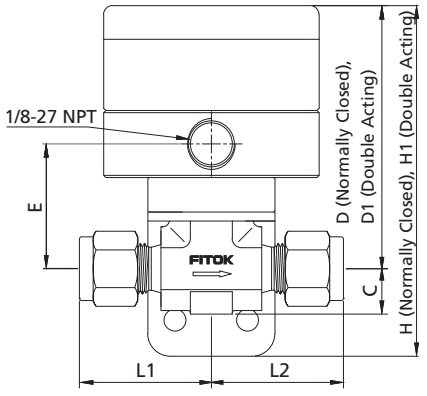

Normally Open

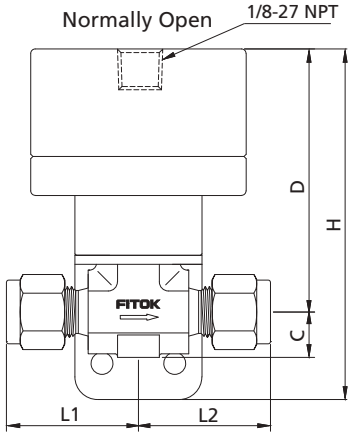

Mounting Bracket

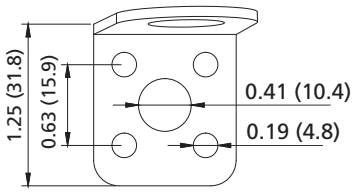

Basic Ordering Number	Connection Type and Size		Orifice in.(mm)	Cv	Dimensions, in.(mm)							
	Inlet	Outlet			L1	L2	C	D	D1	H	H1	E
NT□□-NS2-5-C-Y	1/8 Male NPT	1/8 Male NPT	0.08 (2.0)	0.11	0.86 (21.8)	0.86 (21.8)	0.39 (10.0)	2.28 (58)	2.46 (62.5)	3.04 (77.3)	3.22 (81.8)	1.08 (27.5)
NT□□-NS2-FL2-5-C-Y	1/8 Male NPT	1/8" FITOK			0.86 (21.8)	1.03 (26.2)						
NT□□-FL2-5-C-Y	1/8" FITOK	1/8" FITOK			1.03 (26.2)	1.03 (26.2)						
NT□□-ML3-5-C-Y	3 mm FITOK	3 mm FITOK										
NT□□-FNS2-7-C-Y	1/8 Female NPT	1/8 Female NPT	0.125 (3.2)	0.20	0.81 (20.6)	0.81 (20.6)						
NT□□-NS2-7-C-Y	1/8 Male NPT	1/8 Male NPT			0.86 (21.8)	0.86 (21.8)						
NT□□-NS4-7-C-Y	1/4 Male NPT	1/4 Male NPT			0.98 (25.0)	0.98 (25.0)						
NT□□-NS4-FL4-7-C-Y	1/4 Male NPT	1/4" FITOK			0.98 (25.0)	1.13 (28.7)						
NT□□-FL4-7-C-Y	1/4" FITOK	1/4" FITOK			1.13 (28.7)							
NT□□-ML6-7-C-Y	6 mm FITOK	6 mm FITOK										
NT□□-ML8-7-C-Y	8 mm FITOK	8 mm FITOK										

1. Connection type of "FITOK" means FITOK double ferrule tube fittings.
2. Sizes and types listed are standard. Other sizes and types are available upon request. For details, please contact FITOK Group or our authorized distributors.
3. Dimensions are shown with FITOK tube fitting nuts finger-tight. All dimensions are for reference only and are subject to change. For dimensions not shown above, please contact FITOK Group or our authorized distributors.

Ordering Number Description

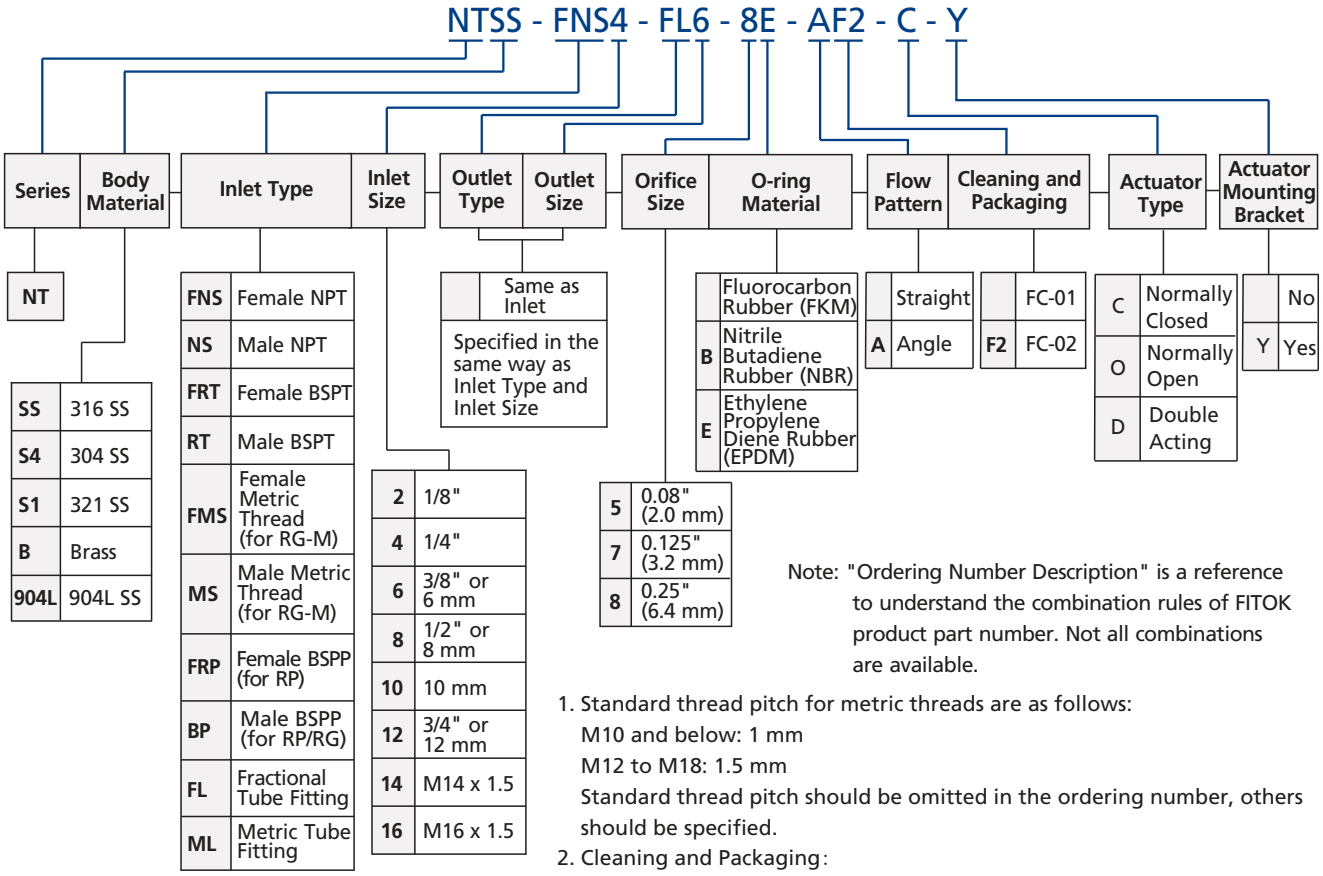

Note: "Ordering Number Description" is a reference to understand the combination rules of FITOK product part number. Not all combinations are available.

1. Standard thread pitch for metric threads are as follows:
   M10 and below: 1 mm
   M12 to M18: 1.5 mm
   Standard thread pitch should be omitted in the ordering number, others should be specified.
2. Cleaning and Packaging:
   FC-01: Standard cleaning and packaging for general industrial procedures.
   FC-02: Special cleaning and packaging for wetted system components to ensure compliance with product cleanliness requirement of ASTM G93 Level C.

Union Bonnet Needle Valves

NU Series: Working pressure up to 6000 psig
NUH Series: Working pressure up to 10000 psig

Features

- One-piece forged body
- Two-piece stem design: Upper stem threads cold rolled and lower stem hardened for high strength and smooth operation
- Accidental valve disassembly disabled by union bonnet construction
- Upper stem thread lubricant isolated from system media
- Linear instead of rotary movement of the rising, non-rotating stem minimizes packing abrasion and reduces the friction between the seat and the tip
- Safety back seating seal in fully open position
- Panel mounting available
- Steady and durable fastening of the handle by double lock-pins
- Handles of different colors available
- Every valve leak tested with nitrogen or compressed air (NU Series) at the maximum allowable working pressure or with water (NUH Series) at 1.1 times the maximum allowable pressure
- Working pressure up to:
  NU Series—Stainless steel: 6000 psig (414 bar)
  Alloy C-276: 6000 psig (414 bar)
  Alloy 400: 5000 psig (345 bar)
  Titanium: 3500 psig (241 bar)
  NUH Series—Stainless steel: 10000 psig (690 bar)
- Working temperature:
  PTFE: -65°F to 450°F (-54°C to 232°C)
  PEEK: -65°F to 500°F (-54°C to 260°C)
  Graphite: -65°F to 1200°F (-54°C to 649°C)



Pressure vs. Temperature

NU Series

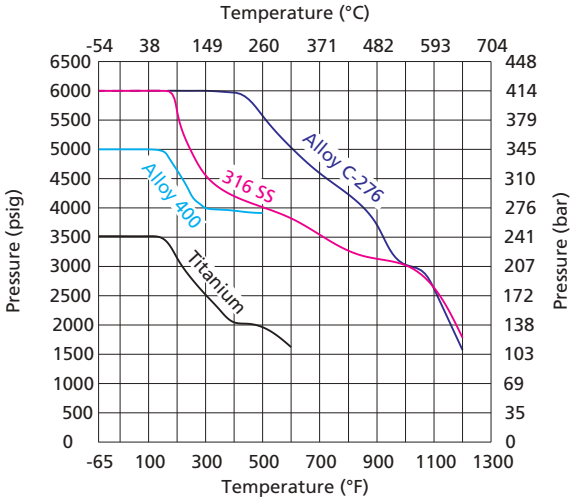

NUH Series

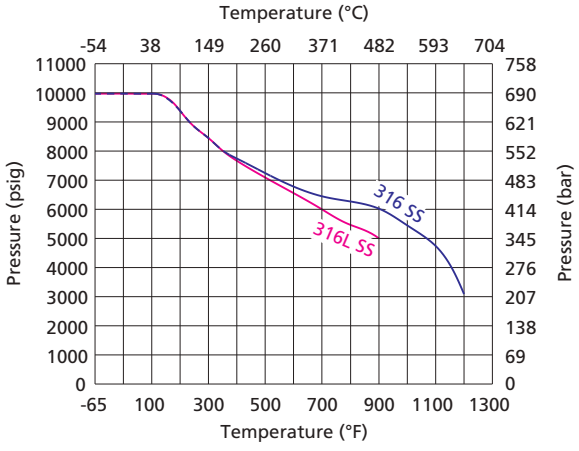

1. Graphs are based on graphite packing.
2. Soft tips are for NU Series only. Temperature rating is limited to 200°F (93°C) max. with PCTFE stem tip (soft tip).
3. Contact FITOK Group or our authorized distributors for curve graph of other materials.

Flow Data at 100°F (37°C)

Regulating Stem

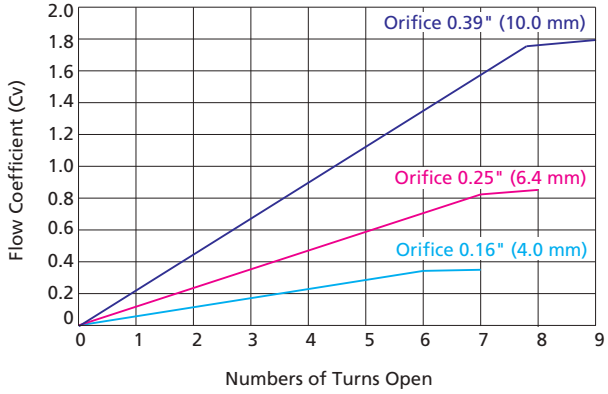

Standard Materials of Construction

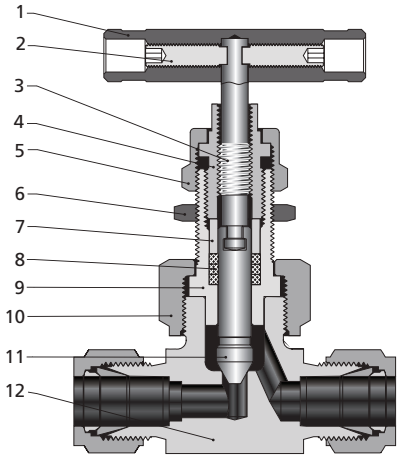

Stem Type

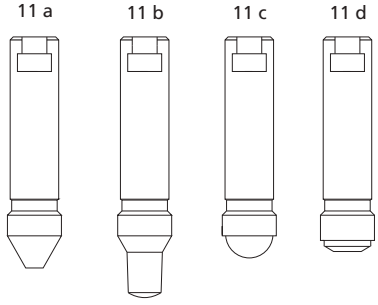

Item	Component	Valve Body Material			
		316 SS	Alloy 400	Titanium	Alloy C-276
		Material Grade/ASTM Specification			
1	Handle	Anodized aluminium or stainless steel or black knob			
2	Set Screw	Zinc-plated carbon steel			
3	Upper Stem	316 SS/A479			
4	Packing Bolt	304 SS/A479			
5	Lock Nut	316 SS/A479			
6	Panel Nut	Stainless steel			
7	Gland	316 SS/A479			
8	Packing	PTFE or PEEK or graphite			
9	Bonnet	316 SS/A479	Alloy 400/B164	Titanium Gr 4/B348	Alloy C-276/B574
10	Union Nut	316 SS/A479			
11a 11b 11c	Lower Stem	Hardened 316 SS/A479	Alloy 400/B164	Titanium Gr 4/B348	Alloy C-276/B574
11d	Stem	316 SS/A479	Alloy 400/B164	Titanium Gr 4/B348	Alloy C-276/B574
	Stem Tip	PTFE or PCTFE or PEEK			
11e	Stem	316 SS/A479	Not Applicable		Alloy C-276/B574
	Stem Tip	Stellite			
12	Body	316 SS/A182	Alloy 400/B164, B127, B564	Titanium Gr 4/B348 or titanium Gr 4/B381	Alloy C-276/B564
	Seat	Same as Body			
Lubricant		Molybdenum disulfide-based			

Note: Contact FITOK Group or our authorized distributors for other materials.

Dimensions

Straight Pattern

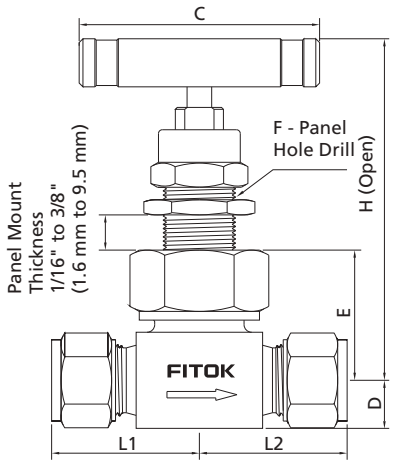

Angle Pattern

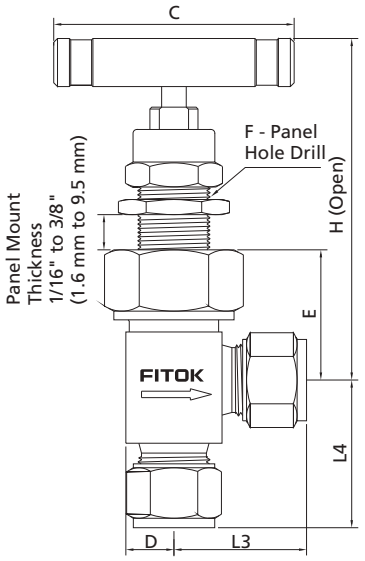

Dimensions of NU Series

Basic Ordering Number	Connection Type and Size	Connection Pressure at 100°F (38°C) psig (bar)	Orifice in.(mm)	Cv	Dimensions, in.(mm)								
	Inlet/Outlet	316 SS			L1	L2	L3	L4	C	D	E	F	H
NU□□-FNS2-7	1/8 Female NPT	6000 (414)	0.16 (4.0)	0.35	1.00 (25.4)	1.00 (25.4)	0.89 (22.6)	1.00 (25.4)	1.75 (44.5)	0.39 (9.9)	1.09 (27.7)	0.59 (15.0)	3.06 (77.7)
NU□□-FNS4-7	1/4 Female NPT				1.03 (26.2)	1.03 (26.2)							
NU□□-NS4-FNS4-7	1/4 Male NPT/ 1/4 Female NPT				1.00 (25.4)	1.03 (26.2)							
NU□□-NS4-7	1/4 Male NPT				1.00 (25.4)	1.00 (25.4)	1.00 (25.4)						
NU□□-NS6-7	3/8 Male NPT												
NU□□-FRP4-7	1/4 Female BSPP				1.03 (26.2)	1.03 (26.2)	0.89 (22.6)						
NU□□-NS4-FL4-7	1/4 Male NPT/ 1/4" FITOK				1.00 (25.4)	1.22 (30.9)	1.14 (29.0)						
NU□□-FNS4-FL4-7	1/4 Female NPT/ 1/4" FITOK				1.03 (26.2)	1.22 (30.9)							
NU□□-FL4-7	1/4" FITOK				1.22 (30.9)	1.22 (30.9)		1.22 (30.9)					
NU□□-ML6-7	6 mm FITOK						1.15 (29.2)						
NU□□-ML8-7	8 mm FITOK												
NU□□-TS4-7-G	1/4" Tube Socket Weld				1.00 (25.4)	1.00 (25.4)	0.85 (21.6)	1.00 (25.4)					
NU□□-FO4-7	1/4" Male FO				1.03 (26.2)	1.03 (26.2)	1.10 (28.0)	1.10 (28.0)					
NU□□-FR4-7	1/4" Male FR												
NU□□-FNS4-8	1/4 Female NPT		0.25 (6.4)	0.86	1.13 (28.6)	1.13 (28.6)	1.00 (25.4)	1.13 (28.6)	2.50 (63.5)	0.50 (12.7)	1.34 (34.0)	0.78 (19.8)	3.78 (96.0)
NU□□-FNS6-8	3/8 Female NPT						1.06 (26.9)						
NU□□-NS6-8	3/8 Male NPT												
NU□□-FL6-8	3/8" FITOK				1.41 (35.9)	1.41 (35.9)	1.28 (32.5)	1.47 (37.3)					
NU□□-FL8-8	1/2" FITOK				1.52 (38.6)	1.52 (38.6)	1.40 (35.6)	1.58 (40.1)					
NU□□-ML10-8	10 mm FITOK				1.42 (36.1)	1.42 (36.1)	1.30 (33.0)	1.48 (37.6)					

Dimensions of NU Series

Basic Ordering Number	Connection Type and Size	Connection Pressure at 100°F (38°C) psig (bar)	Orifice in.(mm)	Cv	Dimensions, in.(mm)								
	Inlet/Outlet	316 SS			L1	L2	L3	L4	C	D	E	F	H
NU□□-ML12-8	12 mm FITOK	6000 (414)	0.25 (6.4)	0.86	1.52 (38.6)	1.52 (38.6)	1.40 (35.6)	1.58 (40.1)	2.50 (63.5)	0.50 (12.7)	1.34 (34.0)	0.78 (19.8)	3.78 (96.0)
NU□□-ML14-8	14 mm FITOK												
NU□□-ML16-8	16 mm FITOK	5800 (400)											
NU□□-TS6-8-G	3/8" Tube Socket Weld	6000 (414)			1.13 (28.6)	1.13 (28.6)	1.00 (25.4)	1.13 (28.6)					
NU□□-TS8-8-G	1/2" Tube Socket Weld												
NU□□-PS4-8-G	1/4 Pipe Socket Weld												
NU□□-MTS12-8-G	12 mm Tube Socket Weld												
NU□□-MTS14-8-G	14 mm Tube Socket Weld												
NU□□-MTS16-8-G	16 mm Tube Socket Weld												
NU□□-MTB14-8-G	14×2.5 mm Tube Butt Weld												
NU□□-MTB16-8-G	16×2.8 mm Tube Butt Weld												
NU□□-UMB14-8	14×2.5 mm Rotatable Tube Butt Weld				2.92 (74.1)	2.92 (74.1)	2.55 (64.7)	2.92 (74.1)					
NU□□-FO8-8	1/2" Male FO				1.13 (28.6)	1.13 (28.6)	___	___					
NU□□-FR8-8	1/2" Male FR				1.56 (39.6)	1.56 (39.6)				0.63 (16.0)	1.46 (37.1)		3.90 (99.0)
NU□□-MS20-8	M20 x 1.5 Male Metric				1.50 (38.1)	1.50 (38.1)	1.13 (28.6)	1.50 (38.1)		0.50 (12.7)	1.34 (34.0)		3.78 (96.0)
NU□□-MS22-8	M22 x 1.5 Male Metric												
NU□□-NS8-9	1/2 Male NPT		0.39 (10.0)	1.8	1.56 (39.6)	1.56 (39.6)	1.56 (39.6)	1.56 (39.6)	3.50 (88.9)	0.63 (16.0)	1.82 (46.2)	1.03 (26.2)	4.76 (121)
NU□□-FNS8-9	1/2 Female NPT												
NU□□-FNS12-9	3/4 Female NPT				1.63 (41.3)	1.63 (41.3)	___	___		0.87 (22.2)	2.07 (52.6)		5.00 (127)
NU□□-NS12-9	3/4 Male NPT									0.63 (16.0)	1.82 (46.2)		4.76 (121)
NU□□-FL8-9	1/2" FITOK				1.97 (50.0)	1.97 (50.0)	1.68 (42.7)	2.08 (52.8)					
NU□□-FL12-9	3/4" FITOK	5800 (400)											
NU□□-ML14-9	14 mm FITOK	6000 (414)											
NU□□-ML16-9	16 mm FITOK	5800 (400)											
NU□□-ML18-9	18 mm FITOK	5370 (370)											
NU□□-ML20-9	20 mm FITOK	5510 (380)											
NU□□-MTS14-9-G	14 mm Tube Socket Weld	6000 (414)			1.56 (39.7)	1.56 (39.7)	1.31 (33.3)	1.69 (42.9)					
NU□□-MTS16-9-G	16 mm Tube Socket Weld												
NU□□-TS8-9-G	1/2" Tube Socket Weld												
NU□□-TS12-9-G	3/4" Tube Socket Weld												
NU□□-MTB16-9-G	16×2.25 mm Tube Butt Weld												
NU□□-UMB14-9	14×2.5 mm Rotatable Tube Butt Weld				2.98 (75.7)	2.98 (75.7)	___	___					
NU□□-FR8-9	1/2" Male FR				1.56 (39.7)	1.56 (39.7)							
NU□□-MS27-9	M27 x 2 Male Metric												

1. Connection type of "FITOK" means FITOK double ferrule tube fittings. When the connection type of valves is FITOK double ferrule tube fitting, the working pressures of the valves are related to the wall thickness of tubing applied. For specific working pressure of the valves, please refer to the allowable working pressures in FITOK Catalog Tubing.
2. Connection type of FO means O-ring face seal fittings."FR"means metal gasket face seal fittings.
3. Sizes and types listed are standard. Other sizes and types are available upon request. For details, please contact FITOK Group or our authorized distributors.
4. Dimensions are shown with FITOK tube fitting nuts finger-tight. All dimensions are for reference only and are subject to change. For dimensions not shown above, please contact FITOK Group or our authorized distributors.

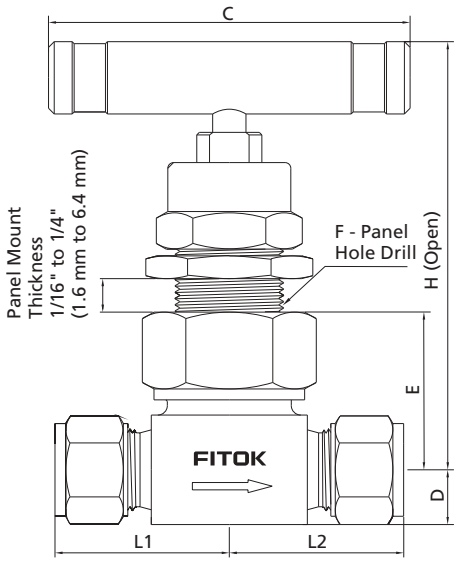

Dimensions of NUH Series

Basic Ordering Number	Connection Type and Size	Connection Pressure at 100°F (38°C) psig (bar)	Orifice in.(mm)	Cv	Dimensions, in.(mm)						
	Inlet/Outlet	316 SS			L1	L2	C	D	E	F	H
NUH□□-FL4-7	1/4" FITOK	10000 (690)	0.16 (4.0)	0.35	1.41 (35.8)	1.41 (35.8)	2.50 (63.5)	0.50 (12.7)	1.35 (34.3)	0.78 (19.8)	3.74 (95.0)
NUH□□-FNS2-7	1/8 Female NPT				1.13 (28.6)	1.13 (28.6)					
NUH□□-FNS4-7	1/4 Female NPT										
NUH□□-NS4-FNS4-7	1/4 Male NPT/ 1/4 Female NPT										
NUH□□-NS4-7	1/4 Male NPT										
NUH□□-TS4-7-G	1/4" Tube Socket Weld										
NUH□□-FNS4-8	1/4 Female NPT		0.25 (6.4)	0.86	1.56 (39.7)	1.56 (39.7)	3.50 (88.9)	0.63 (16.0)	1.77 (45.0)	1.03 (26.2)	4.90 (124.5)
NUH□□-NS8-8	1/2 Male NPT										
NUH□□-TS8-8-G	1/2" Tube Socket Weld										
NUH□□-MTS12-8-G	12 mm Tube Socket Weld										
NUH□□-MTS16-9-G	16 mm Tube Socket Weld		0.39 (10.0)	1.8	1.75 (44.5)	1.75 (44.5)	3.50 (88.9)	0.91 (23.0)	2.29 (58.2)	1.14 (28.9)	5.28 (134.1)
NUH□□-MTB22-9-G	22×5 mm Tube Butt Weld										
NUH□□-FNS8-9	1/2 Female NPT				1.56 (39.7)	1.56 (39.7)					

1. Connection type of "FITOK" means FITOK double ferrule tube fittings. When the connection type of valves is FITOK double ferrule tube fitting, the working pressures of the valves are related to the wall thickness of tubing applied. For specific working pressure of the valves, please refer to the allowable working pressures in FITOK Tubing catalog.
2. Sizes and types listed are standard. Other sizes and types are available upon request. For details, please contact FITOK Group or our authorized distributors.
3. Dimensions are shown with FITOK tube fitting nuts finger-tight. All dimensions are for reference only and are subject to change. For dimensions not shown above, please contact FITOK Group or our authorized distributors.

Ordering Number Description

NUSS - FNS6 - FL6 - 8WB - GM - ASF2

Series
NU
NUH

Body Material	
SS	316 SS
6L	316L SS
S4	304 SS
4L	304L SS
S1	321 SS
91	F91
92	F92
D5	Duplex 2205
TI	Titanium
A20	Alloy 20
M	Alloy 400
INC	Alloy 600
HC	Alloy C -276
B	Brass
CS	Carbon Steel
904L	904L SS

Inlet Type	
FNS	Female NPT
NS	Male NPT
FRT	Female BSPT
RT	Male BSPT
FMS	Female Metric Thread (for RG-M)
MS	Male Metric Thread (for RG-M)
FRP	Female BSPP (for RP)
BP	Male BSPP (for RP and RG)
TS	Fractional Tube Socket Weld
MTS	Metric Tube Socket Weld
TB	Fractional Tube Butt Weld
MTB	Metric Tube Butt Weld
PS	Pipe Socket Weld
PB	Pipe Butt Weld
FL	Fractional Tube Fitting
ML	Metric Tube Fitting
UFB	Rotatable Fractional Tube Butt Weld
UMB	Rotatable Metric Tube Butt Weld
FO	Male FO Fitting
FR	Male FR Fitting

Inlet Size	
2	1/8"
4	1/4"
6	3/8" or 6 mm
8	1/2" or 8 mm
10	10 mm
12	3/4" or 12 mm
14	14 mm or 14×2.5 mm or M14×1.5
16	1" or 16 mm or 16×2.25 mm or 16×2.8 mm
18	18 mm
20	20 mm or M20 x 1.5
22	22 mm or 22×5 mm or M22×1.5
24	M24 x 1.5
25	25 mm
27	M27 x 2

Outlet Type / Outlet Size	
	Same as Inlet
Specified in the same way as inlet type and inlet size	

Orifice Size	
7	0.16" (4.0 mm)
8	0.25" (6.4 mm)
9	0.39" (10 mm)

Stem Tip Material	
	Same as Body
W	Stellite
D5	Duplex 2205
TI	Titanium
A20	Alloy 20
M	Alloy 400
INC	Alloy 600
HC	Alloy C-276

Stem Tip Type	
	Taper
R	Regulating
B	Ball
T	Soft Tip-PTFE (only for NU Series Needle Valves)
K	Soft Tip-PCTFE (only for NU Series Needle Valves)
P	Soft Tip-PEEK (only for NU Series Needle Valves)

Packing Material	
	PTFE
P	PEEK
G	Graphite

Handle	
	Black Aluminum Bar
I	Red Aluminum Bar
GR	Green Aluminum Bar
J	Blue Aluminum Bar
M	Stainless Steel Bar
B	Black Knob (only for NU Series Needle Valves with the orifice 0.16"/4.0mm and 0.25"/6.4mm)

Flow Pattern	
	Straight
A	Angle

Special Application	
	No
S	NACE MR0175
SI	SilcoNert® 2000 (Sulfinert®) Coating

Cleaning and Packaging	
	FC-01
F2	FC-02

Note: "Ordering Number Description" is a reference to understand the combination rules of FITOK product part number. Not all combinations are available.

1. Standard thread pitch for metric threads are as follows:
   M10 and below: 1 mm
   M12 to M24: 1.5 mm
   M27 and above: 2 mm
   Standard thread pitch should be omitted in the ordering number, others should be specified.
2. FO means FITOK O-ring face seal fittings.
3. FR means FITOK metal gasket face seal fittings.
4. Cleaning and Packaging:
   FC-01: Standard cleaning and packaging for general industrial procedures.
   FC-02: Special cleaning and packaging for wetted system components to ensure compliance with product cleanliness requirement of ASTM G93 Level C.
5. Special Application:
   Plural special application designators available in one ordering number, example: NUSS-NS4-7-SSI.
   SilcoNert® 2000 (Sulfinert®) coating: Wetted metal components SilcoNert® 2000 (Sulfinert®) coated.

Outside Screw and Yoke (OS&Y) Needle Valves

NY Series: Working pressure up to 6000 psig

Features



- Cold drawn bar as body
- Standard seat diameter 0.16" (4mm). Cv: 0.35 standard
- Hardened stem threads prevent galling
- Stem threads completely isolated from system media
- Linear instead of rotary motion of the rising, non-rotating stem minimizes packing abrasion and reduces the friction between the seat and the tip
- Externally adjustable gland, independent of spindle thread
- Steady and durable fastening of the handle by double lock-pins
- Bottom mounting available
- Every valve leak tested with nitrogen or compressed air at maximum allowable working pressure
- Working pressure up to:
  Stainless steel: 6000 psig (414 bar)
  Alloy C-276: 6000 psig (414 bar)
  Alloy 400: 5000 psig (345 bar)
- Working temperature:
  PTFE: -65°F to 450°F(-54°C to 232°C)
  PEEK: -65°F to 500°F (-54°C to 260°C)
  Graphite: -65°F to 1200°F (-54°C to 649°C)

Pressure vs. Temperature

NY Series

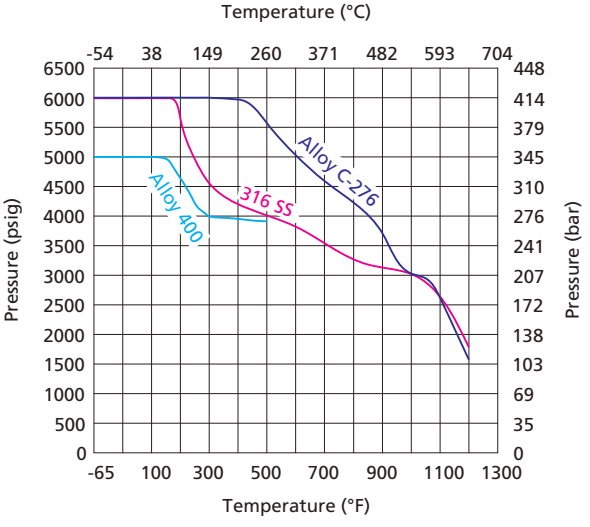

1. Graphs are based on graphite packing.
2. Contact FITOK Group or our authorized distributors for curve graph of other materials.

Standard Materials of Construction

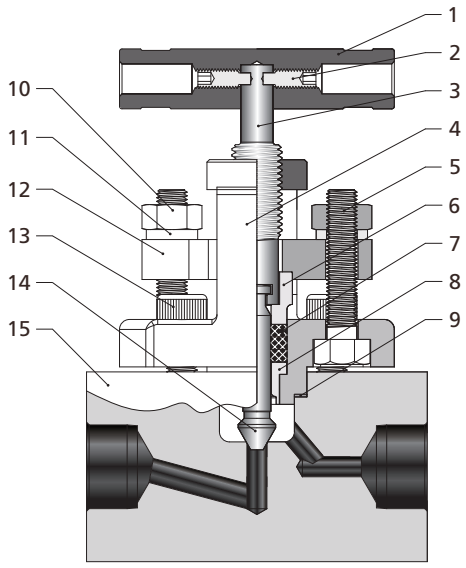

Item	Component	Valve Body Material
		316 SS
		Material Grade/ASTM Specification
1	Handle	Anodized aluminum or stainless steel
2	Set Screw	Zinc-plated carbon steel
3	Upper Stem	316 SS/A479
4	Yoke	316 SS/A182
5	Bolts	Stainless steel
6	Packing Washer	316 SS/A479
7	Packing	PTFE or PEEK or graphite
8	Packing Washer	316 SS/A479
9	Joint Seal	316 SS/A479
10	Nuts	Stainless steel
11	Gaskets	Stainless steel
12	Gland bridge	316 SS/A182
13	Bolts	Stainless steel
14	Lower Stem	Hardened 316 SS/A479
15	Body	316 SS/A479
	Lubricant	Molybdenum disulfide-based

Note: Contact FITOK Group or our authorized distributors for other materials.

Dimensions of NY Series

Basic Ordering Number	Connection Type and Size		Orifice in.(mm)	Cv	Dimensions, in.(mm)		
	Inlet	Outlet			A	B	C
NY□□-FNS4	1/4 Female NPT	1/4 Female NPT	0.16 (4.0)	0.35	2.69 (68.2)	1.50 (38.1)	4.04 (102.7)
NY□□-NS4	1/4 Male NPT	1/4 Male NPT			2.95 (75.0)		
NY□□-NS4-FNS4	1/4 Male NPT	1/4 Female NPT					
NY□□-FNS6	3/8 Female NPT	3/8 Female NPT			2.72 (69.2)		
NY□□-NS6	3/8 Male NPT	3/8 Male NPT			2.93 (75.0)		
NY□□-FNS8	1/2 Female NPT	1/2 Female NPT			3.00 (76.2)		
NY□□-NS8	1/2 Male NPT	1/2 Male NPT			3.27 (82.0)		
NY□□-NS8-FNS8	1/2 Male NPT	1/2 Female NPT					
NY□□-PS8-G	1/2 Pipe Socket Weld	1/2 Pipe Socket Weld			3.00 (76.2)		
NY□□-PB8-G	1/2×SCH80 Pipe Butt Weld	1/2×SCH80 Pipe Butt Weld			3.54 (89.8)		
NY□□-FL4	1/4" FITOK	1/4" FITOK			3.44 (87.4)		
NY□□-FL6	3/8" FITOK	3/8" FITOK			3.50 (88.9)		
NY□□-FL8	1/2" FITOK	1/2" FITOK			3.78 (96.0)		
NY□□-ML6	6 mm FITOK	6 mm FITOK			3.44 (87.4)		
NY□□-ML8	8 mm FITOK	8 mm FITOK					
NY□□-ML12	12 mm FITOK	12 mm FITOK			3.78 (96.0)		

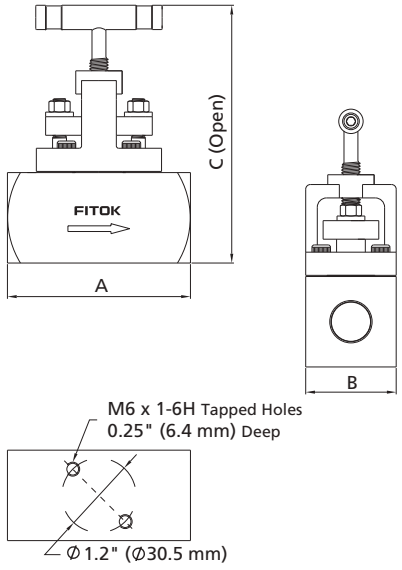

1. Connection type of "FITOK" means FITOK double ferrule tube fittings. When the connection type of valves is FITOK double ferrule tube fitting, the working pressures of the valves are related to the wall thickness of tubing applied. For specific working pressure of the valves, please refer to the allowable working pressures in FITOK Catalog Tubing.
2. Sizes and types listed are standard. Other sizes and types are available upon request. For details, please contact FITOK Group or our authorized distributors.
3. Dimensions are shown with FITOK tube fitting nuts finger-tight. All dimensions not shown above, please contact FITOK Group or our authorized distributors.

Ordering Number Description

NYSS - FL8 - ML12 - WB - GY - SF2

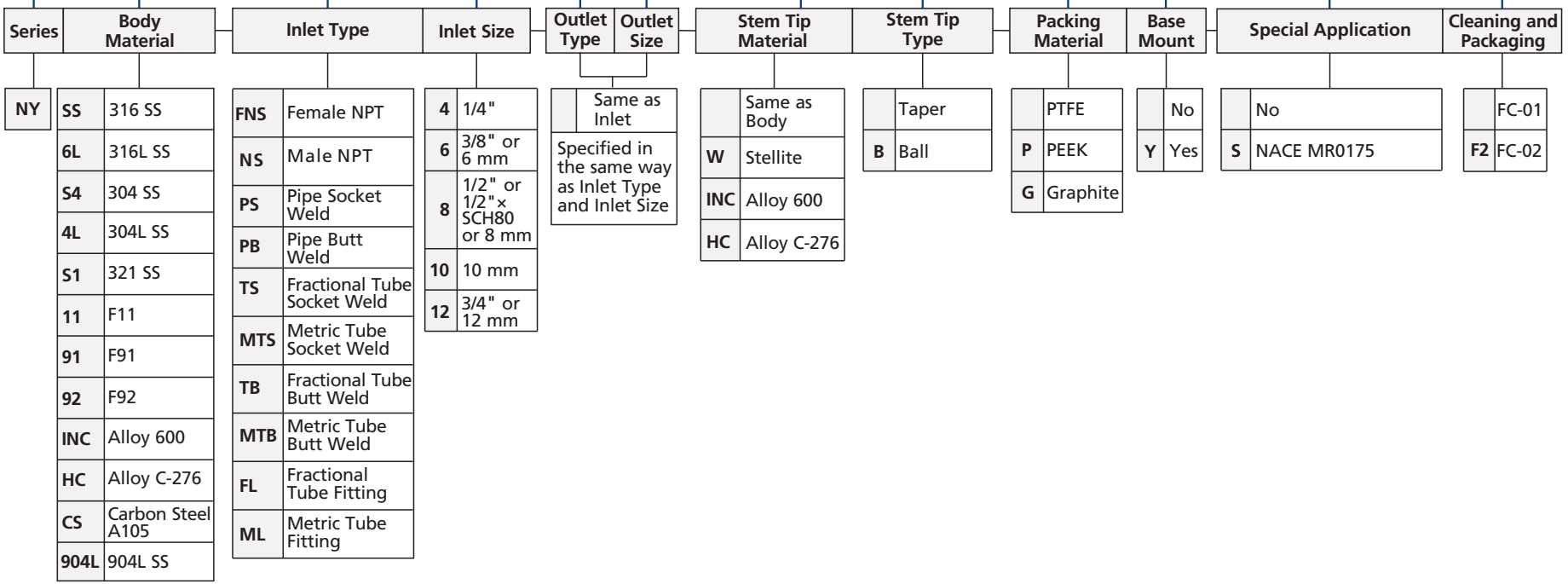

Series	Body Material	Inlet Type	Inlet Size	Outlet Type	Outlet Size	Stem Tip Material	Stem Tip Type	Packing Material	Base Mount	Special Application	Cleaning and Packaging
NY	SS 316 SS	FNS Female NPT	4 1/4"	Same as Inlet	Same as Inlet	Same as Body	Taper	PTFE	No	No	FC-01
	6L 316L SS	NS Male NPT	6 3/8" or 6 mm	Specified in the same way as Inlet Type and Inlet Size		W Stellite	B Ball	P PEEK	Y Yes	S NACE MR0175	F2 FC-02
	S4 304 SS	PS Pipe Socket Weld	8 1/2" or 1/2"× SCH80 or 8 mm			INC Alloy 600		G Graphite			
	4L 304L SS	PB Pipe Butt Weld	10 10 mm			HC Alloy C-276					
	S1 321 SS	TS Fractional Tube Socket Weld	12 3/4" or 12 mm								
	11 F11	MTS Metric Tube Socket Weld									
	91 F91	TB Fractional Tube Butt Weld									
	92 F92	MTB Metric Tube Butt Weld									
	INC Alloy 600	FL Fractional Tube Fitting									
	HC Alloy C-276	ML Metric Tube Fitting									
	CS Carbon Steel A105										
	904L 904L SS										

Note: "Ordering Number Description" is a reference to understand the combination rules of FITOK product part number.
Not all combinations are available.

Cleaning and Packaging:
FC-01: Standard cleaning and packaging for general industrial procedures.
FC-02: Special cleaning and packaging for wetted system components to ensure compliance with product cleanliness requirement of ASTM G93 Level C.

Metering Valves

MS, MV, ML and MH Series



Features

MS Series

- ◎ Working pressure up to: 2000 psig (138 bar)
- ◎ Working temperature: -10°F to 400°F (-23°C to 204°C)
- ◎ Orifice size: 0.032" (0.81 mm)
- ◎ Max. flow coefficient (Cv): 0.004
- ◎ Stem taper: 1°
- ◎ Turns to open: 9 to12
- ◎ Shutoff service: not available
- ◎ Bottom mounting available
- ◎ Variety of end connections
- ◎ Panel mountable
- ◎ Flow pattern: straight, angle, cross and double
- ◎ Handle type: knurled, vernier and slotted
- ◎ Variety of materials available for valve body



MV and ML Series

- ◎ Working pressure up to: 1000 psig (69 bar)
- ◎ Working temperature: -10°F to 400°F (-23°C to 204°C)
- ◎ Max. flow coefficients (Cv):
  - MV series: 0.03
  - ML series: 0.15
- ◎ Orifice sizes:
  - MV series: 0.056" (1.42 mm)
  - ML series: 0.128" (3.25 mm)
- ◎ Stem taper:
  - MV series: 3°
  - ML series: 6.5°
- ◎ Turns to open:
  - MV series: 8 to 10
  - ML series: 10 to 11
- ◎ Shutoff service:
  - MV series: not available
  - ML series: available
- ◎ Variety of end connections
- ◎ Panel mountable
- ◎ Flow pattern: straight, angle, cross (MV Series) and double (MV Series)
- ◎ Handle type:
  - MV series: knurled, vernier and slotted
  - ML series: round and vernier
- ◎ Variety of materials available for valve body



MH Series

- Working pressure up to: 5000 psig (345 bar)
- Working temperature: -65°F to 850°F (-54°C to 454°C)
- Orifice size: 0.062" (1.6 mm)
- Max. flow coefficient(Cv): 0.04
- Stem taper: 2°
- Turns to open: 9 to 10
- Shutoff service: available
- Variety of end connections
- Panel mountable
- Flow pattern: straight and angle
- Handle type: round circular and vernier
- Variety of materials available for valve body



Pressure vs. Temperature

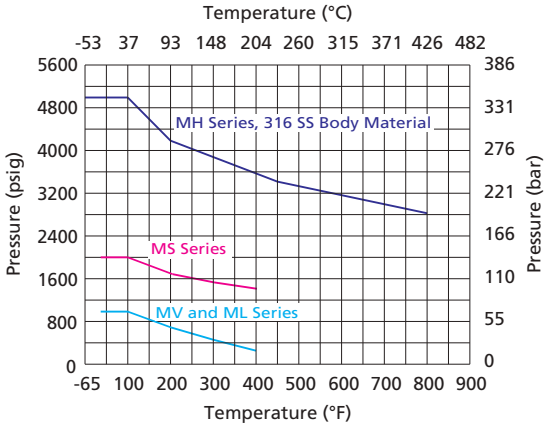

1. Graphs are based on Fluorocarbon and Graphite (for MH Series).
2. Contact FITOK Group or our authorized distributors for curve graph of other materials.

Temperature Ranges for Different Seal Materials

Seal Material	Temperature Range °F (°C)
O-Ring (for MS, MV, ML Series)	
Buna N (NBR)	-10 to 212 (-23 to 100)
Ethylene Propylene (EPDM)	-10 to 300 (-23 to 148)
Fluorocarbon (FKM)	-10 to 400 (-23 to 204)
FFKM	-10 to 527 (-23 to 275)
Neoprene (CR)	-10 to 250 (-23 to 121)
Stem Packing (for MH Series)	
PTFE	-65 to 450 (-54 to 232)
Graphite	-65 to 850 (-54 to 454)

Standard Materials of Construction

MS Series

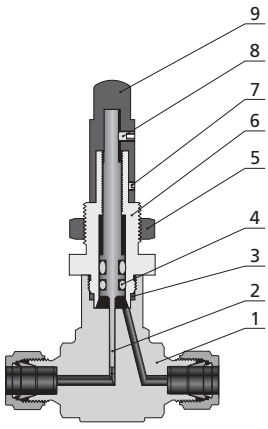

Component		Valve Body Material Grade/ASTM Specification	
		316 SS	Brass
1	Body	316 SS/A182	Silver-mist chrome-plated C37700/B283
2	Stem	316 SS/A479	
3	Body Seal	Fluorocarbon FKM	
4	O-ring	Fluorocarbon FKM	
5	Panel Mount Nut	Stainless steel	Silver-mist chrome-plated C36000/B16
6	Bonnet	316 SS/A479	Silver-mist chrome-plated C36000/B16
7	Lock Screw	Stainless steel	
8	Handle Screw	Stainless steel	
9	Handle	316 SS/A276	Silver-mist chrome-plated C36000/B16

Note: Adjusting the valve at a relatively low position may damage the valve body and stem tip.

MV Series

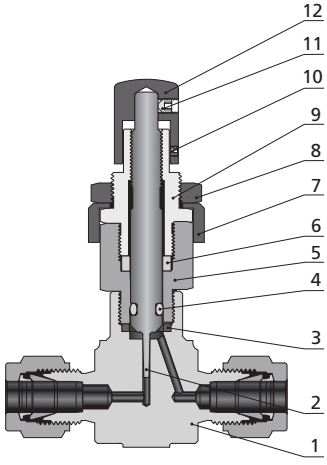

Component		Valve Body Material Grade/ASTM Specification	
		316 SS	Brass
1	Body	316 SS/A182	Silver-mist chrome-plated C37700/B283
2	Stem	316 SS/A479	
3	Body Seal	Fluorocarbon FKM	
4	O-ring	Fluorocarbon FKM	
5	Body Extension	316 SS/A479	Silver-mist chrome-plated C36000/B16
6	Stem Guide Ring	PTFE/D1710	
7	Bonnet Sleeve	Stainless steel	
8	Panel Mount Nut	316 SS/A276	Silver-mist chrome-plated C36000/B16
9	Bonnet	316 SS/A479	Silver-mist chrome-plated C36000/B16
10	Lock Screw	Stainless steel	
11	Handle Screw	Stainless steel	
12	Handle	316 SS/A276	Silver-mist chrome-plated C36000/B16

ML Series

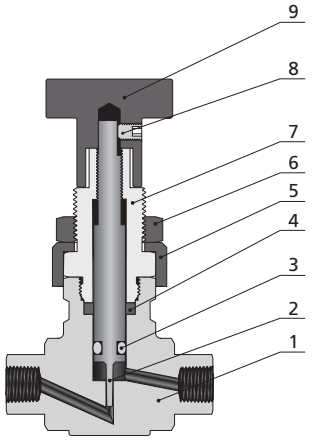

Component		Valve Body Material Grade/ASTM Specification	
		316 SS	Brass
1	Body	316 SS/A182	Silver-mist chrome-plated C37700/B283
2	Stem	Hardened 316 SS/A479	
3	O-ring	Fluorocarbon FKM	
4	Stem Guide Ring	PTFE/D1710	
5	Bonnet Sleeve	Stainless steel	
6	Panel Mount Nut	316 SS/A276	Silver-mist chrome-plated C36000/B16
7	Bonnet	316 SS/A479	Silver-mist chrome-plated C36000/B16
8	Handle Screw	Stainless steel	
9	Handle	Anodized aluminium	

1. Lubricants: Silicone-based
2. Contact FITOK Group or our authorized distributors for other materials.

MH Series

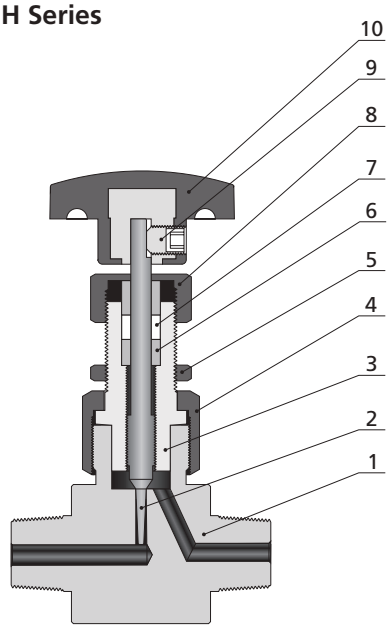

Component		Material Grade/ASTM Specification
1	Body	316 SS/A479
2	Stem	440C SS/A276
3	Bonnet	316 SS/A479
4	Union Nut	316 SS/A276
5	Panel Mount Nut	Stainless steel
6	Packing Gland	316 SS/A276
7	Packing	PTFE/D1710
8	Union Nut	316 SS/A276
9	Handle Screw	Stainless steel
10	Handle	Nylon

Lubricant: Silicone-based

Flow Data in Full Open Position at 70°F (20°C)

Pressure Drop to Atmosphere psig (bar)	MS Series (Cv: 0.004)		MV Series (Cv: 0.03)		ML Series (Cv: 0.15)		MH Series (Cv: 0.04)	
	Air Flow std ft^3/min (std L/min)	Water Flow U.S. gal/min (L/min)	Air Flow std ft^3/min (std L/min)	Water Flow U.S. gal/min (L/min)	Air Flow std ft^3/min (std L/min)	Water Flow U.S. gal/min (L/min)	Air Flow std ft^3/min (std L/min)	Water Flow U.S. gal/min (L/min)
10 (0.69)	0.04 (1.1)	0.01 (0.03)	0.33 (9.3)	0.09 (0.34)	2.00 (56.6)	0.51 (1.90)	0.45 (12.7)	0.12 (0.45)
50 (3.45)	0.10 (2.8)	0.02 (0.07)	0.90 (25.4)	0.21 (0.79)	6.40 (181)	1.20 (4.50)	1.20 (33.9)	0.28 (1.00)
100 (6.90)	0.20 (5.6)	0.04 (0.15)	1.50 (42.4)	0.30 (1.10)	11.40 (323)	1.70 (6.40)	2.10 (59.4)	0.40 (1.50)

Flow Coefficient at Turns to Open

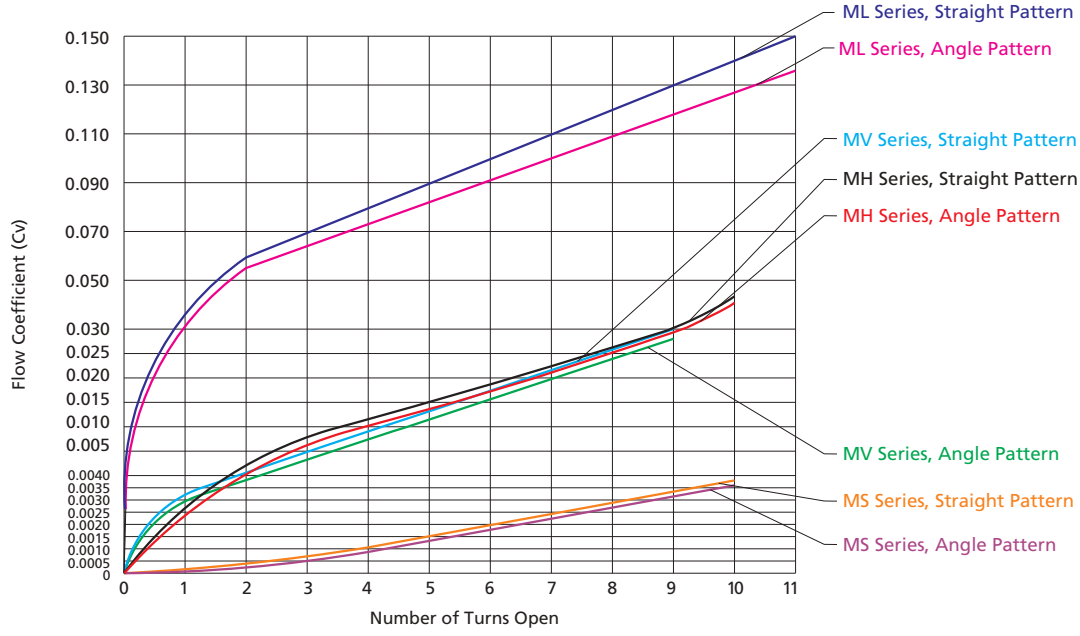

FITOK

Dimensions

MS Series

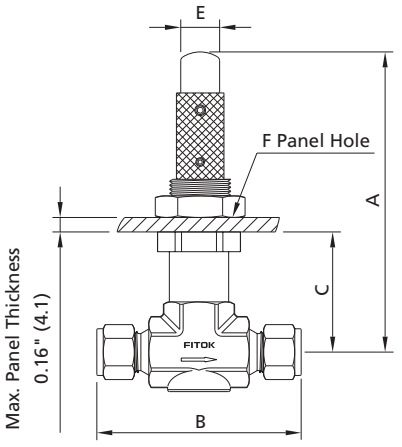

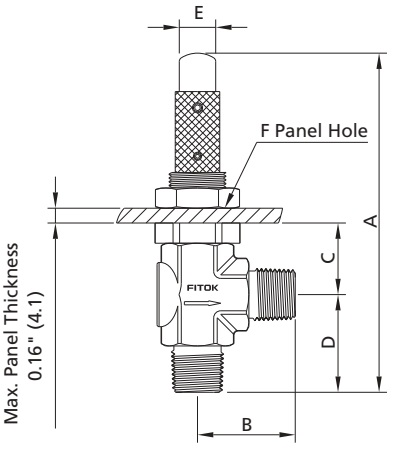

Basic Ordering Number	Connection Type and Size		Dimensions, in. (mm)					
	Inlet	Outlet	A	B	C	D	E	F
Straight Pattern								
MS☐☐-FL1-	1/16" FITOK	1/16" FITOK	2.34 (59.4)	1.56 (39.6)	0.92 (23.4)	—	0.38 (9.6)	0.45 (11.4)
MS☐☐-FL2-	1/8" FITOK	1/8" FITOK		2.04 (51.8)				
MS☐☐-FL4-	1/4" FITOK	1/4" FITOK						
MS☐☐-ML3-	3 mm FITOK	3 mm FITOK						
MS☐☐-ML6-	6 mm FITOK	6 mm FITOK						
MS☐☐-FR4-	1/4 Male FR	1/4 Male FR		2.06 (52.3)				
Angle Pattern								
MS☐☐-FL1-	1/16" FITOK	1/16" FITOK	2.96 (75.2)	0.81 (20.6)	0.92 (23.4)	0.88 (22.4)	0.38 (9.6)	0.45 (11.4)
MS☐☐-FL2-	1/8" FITOK	1/8" FITOK	3.07 (78.0)	0.98 (24.9)		0.98 (24.9)		
MS☐☐-FL4-	1/4" FITOK	1/4" FITOK	3.11 (79.0)	1.02 (25.9)		1.02 (25.9)		
MS☐☐-ML3-	3 mm FITOK	3 mm FITOK	3.07 (78.0)	0.98 (24.9)		0.98 (24.9)		
MS☐☐-FNS2-	1/8 Female NPT	1/8 Female NPT						

MV and ML Series

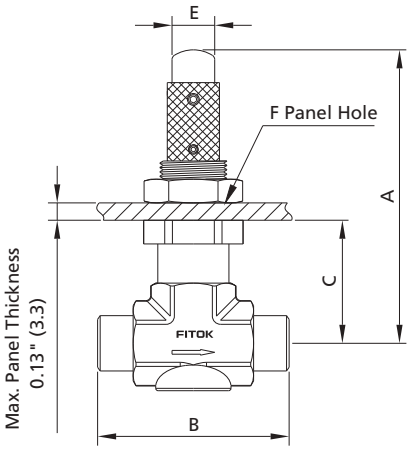

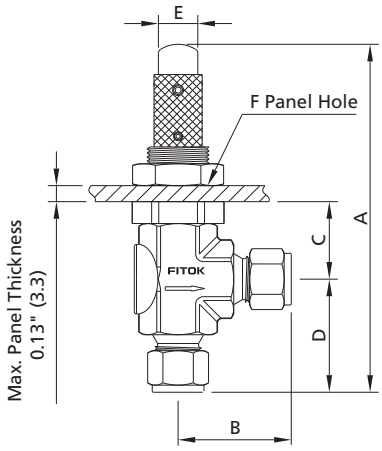

Basic Ordering Number	Connection Type and Size		Dimensions, in. (mm)					
	Inlet	Outlet	A	B	C	D	E	F
Straight Pattern								
MV□□-FL2-	1/8" FITOK	1/8" FITOK	2.64 (67.1)	2.02 (51.3)	1.52 (38.5)	——	0.50 (12.7)	0.58 (14.7)
MV□□-FL4-	1/4" FITOK	1/4" FITOK		2.20 (55.9)				
MV□□-ML3-	3 mm FITOK	3 mm FITOK		2.02 (51.3)				
MV□□-ML6-	6 mm FITOK	6 mm FITOK		2.20 (55.9)				
MV□□-NS2-	1/8 Male NPT	1/8 Male NPT		1.60 (40.6)				
MV□□-NS4-	1/4 Male NPT	1/4 Male NPT		1.96 (49.8)				
MV□□-FNS2-	1/8 Female NPT	1/8 Female NPT		1.94 (49.3)				
MV□□-FR4-	1/4 Male FR	1/4 Male FR		2.06 (52.3)				
Angle Pattern								
MV□□-FL2-	1/8" FITOK	1/8" FITOK	3.65 (92.8)	1.01 (25.7)	1.07 (27.2)	1.01 (25.7)	0.50 (12.7)	0.58 (14.7)
MV□□-FL4-	1/4" FITOK	1/4" FITOK	3.74 (95.0)	1.10 (27.9)		1.10 (27.9)		
MV□□-ML3-	3 mm FITOK	3 mm FITOK	3.65 (92.8)	1.01 (25.7)		1.01 (25.7)		
MV□□-ML6-	6 mm FITOK	6 mm FITOK	3.74 (95.0)	1.10 (27.9)		1.10 (27.9)		
MV□□-NS2-	1/8 Male NPT	1/8 Male NPT	3.44 (87.4)	0.80 (20.3)		0.80 (20.3)		
MV□□-NS4-	1/4 Male NPT	1/4 Male NPT	3.62 (92.0)	0.98 (24.9)		0.98 (24.9)		
MV□□-FNS2-	1/8 Female NPT	1/8 Female NPT	3.61 (91.7)	0.97 (24.6)		0.97 (24.6)		
MV□□-FR4-	1/4 Male FR	1/4 Male FR						

Basic Ordering Number	Connection Type and Size		Dimensions, in. (mm)					
	Inlet	Outlet	A	B	C	D	E	F
Straight Pattern								
ML□□-FL4-	1/4" FITOK	1/4" FITOK	2.72 (69.1)	2.34 (59.4)	1.26 (32.0)	——	1.13 (28.7)	0.58 (14.7)
ML□□-FL6-	3/8" FITOK	3/8" FITOK		2.46 (62.5)				
ML□□-ML6-	6 mm FITOK	6 mm FITOK		2.34 (59.4)				
ML□□-NS4-	1/4 Male NPT	1/4 Male NPT		2.00 (50.8)				
Angle Pattern								
ML□□-FL4-	1/4" FITOK	1/4" FITOK	3.89 (98.8)	1.17 (29.7)	1.26 (32.0)	1.17 (29.7)	1.13 (28.7)	0.58 (14.7)
ML□□-ML6-	6 mm FITOK	6 mm FITOK						

MH Series

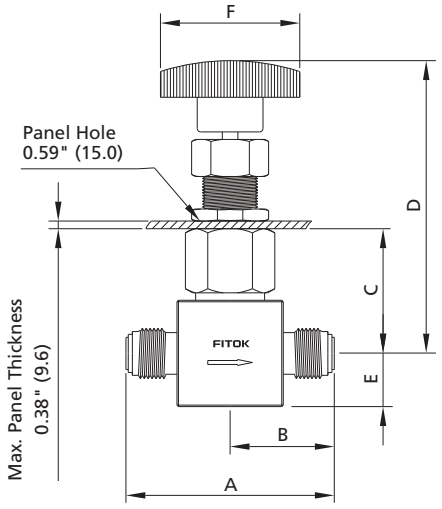

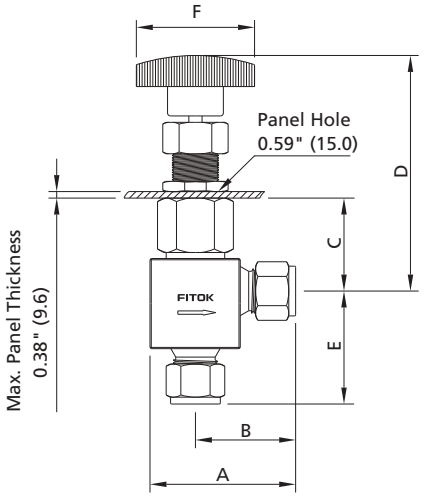

Basic Ordering Number	Connection Type and Size		Dimensions, in. (mm)					
	Inlet	Outlet	A	B	C	D	E	F
Straight Pattern								
MH□□-FL4-	1/4" FITOK	1/4" FITOK	2.40 (61.0)	1.20 (30.5)	1.09 (27.7)	3.86 (98.0)	0.38 (9.6)	1.38 (35.1)
MH□□-ML6-	6 mm FITOK	6 mm FITOK						
MH□□-FNS2-	1/8 Female NPT	1/8 Female NPT	2.00 (50.8)	1.00 (25.4)			0.40 (10.1)	
MH□□-FNS4-	1/4 Female NPT	1/4 Female NPT	2.06 (52.3)	1.03 (26.2)				
Angle Pattern								
MH□□-FL4-	1/4" FITOK	1/4" FITOK	1.54 (39.1)	1.16 (29.5)	1.09 (27.7)	3.86 (98.0)	1.48 (37.6)	1.38 (35.1)
MH□□-ML6-	6 mm FITOK	6 mm FITOK						
MH□□-FNS2-	1/8 Female NPT	1/8 Female NPT	1.28 (32.5)	0.91 (23.1)			1.00 (25.4)	
MH□□-FNS4-	1/4 Female NPT	1/4 Female NPT						

Optional Handles

Slotted Handle

- Flow setting adjustment is available with a screwdriver
- Ideal for installation where handle is difficult to access
- Available for MS and MV series

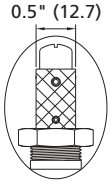

Vernier Handle

- Precise graduated aluminum alloy handle
- Repeatable flow setting
- Adjustment accurate to 1/25 turn (1/1000 of an inch)
- Available for all series

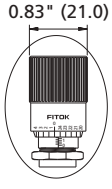

Optional Patterns

Cross Pattern

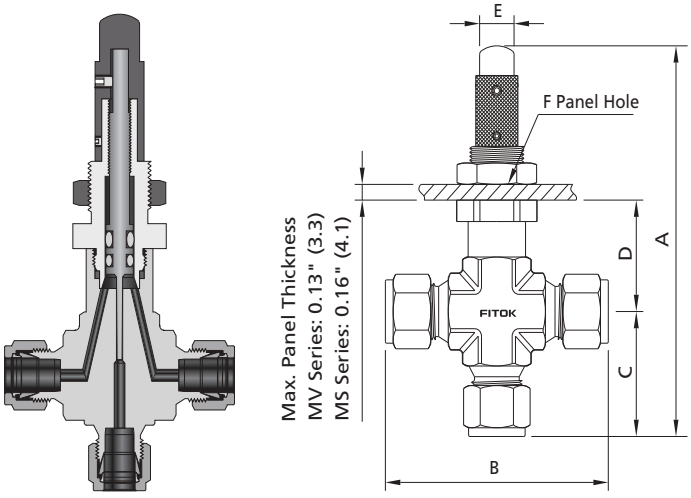

Double Pattern

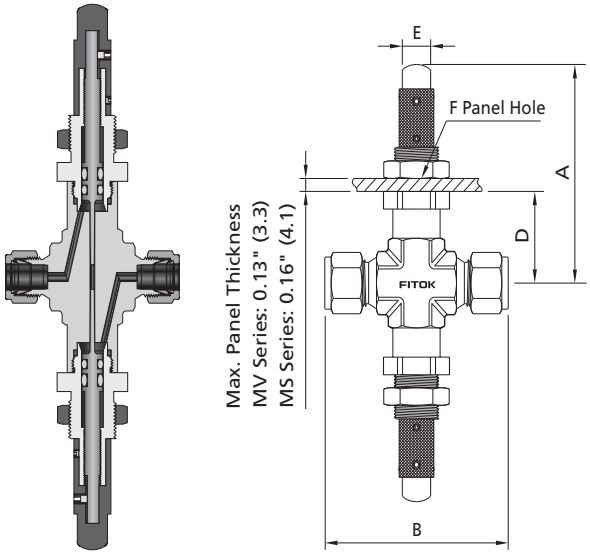

1. Fluid flows between side ports around stem in any stem position.
2. Fluid flows through branch port can be metered in both directions.

Inlet valve handle can be set and locked at desired maximum flow, outlet valve handle can be used for fine flow control up to the preset maximum of the inlet valve.

Basic Ordering Number	Connection Type and Size		Dimensions, in. (mm)					
	Inlet	Outlet	A	B	C	D	E	F
Cross Pattern								
MS☐☐-FL2-	1/8" FITOK	1/8" FITOK	3.32 (84.3)	1.96 (49.8)	0.98 (24.9)	0.92 (23.4)	0.38 (9.6)	0.45 (11.4)
MS☐☐-ML3-	3 mm FITOK	3 mm FITOK						
Double Pattern								
MS☐☐-FL2-	1/8" FITOK	1/8" FITOK	2.41 (61.2)	1.90 (48.3)	——	0.99 (25.2)	0.38 (9.6)	0.45 (11.4)
MS☐☐-ML3-	3 mm FITOK	3 mm FITOK						
Cross Pattern								
MV☐☐-FL4-	1/4" FITOK	1/4" FITOK	3.74 (95.0)	2.20 (55.9)	1.10 (27.9)	1.52 (38.5)	0.50 (12.7)	0.58 (14.7)
MV☐☐-ML6-	6 mm FITOK	6 mm FITOK						
Double Pattern								
MV☐☐-FL4-	1/4" FITOK	1/4" FITOK	2.62 (67.1)	2.20 (55.9)	——	1.52 (38.5)	0.50 (12.7)	0.58 (14.7)
MV☐☐-ML6-	6 mm FITOK	6 mm FITOK						

1. FITOK means FITOK double ferrule tube fittings, FR means metal gasket seal fittings.
2. Sizes and types listed are standard. Other sizes and types are available upon request. For special sizes and types, refer to the ordering information.
3. Dimensions are shown with FITOK nuts finger-tightened. All dimensions are for reference only and are subject to change. For dimensions not shown above, please contact FITOK Group or our authorized distributors.

Ordering Number Description

MVSS – FL4 – ML6 – EVJ – ASF2

Series	Body Material	Inlet Type	Inlet Size	Outlet Type	Outlet Size	Seal Material	Handle Type and Default color	Handle Color	Flow Pattern	Special Application	Cleaning and Packaging
MS	SS 316 SS	FNS Female NPT	1 1/16"	Same as inlet		Fluorocarbon (FKM)	Round (Black) For MH and ML	Default	Straight	No	FC-01
MV	6L 316L SS	NS Male NPT	2 1/8"	Specified in the same way as the inlet type and size		PTFE (MH Only)	Knurled (Metallic luster) For MS and MV	C Red	A Angle	S NACE MR0175	F2 FC-02
ML	S4 304 SS	FRT Female BSPT	3 3 mm			B Buna N (NBR)	L Slotted (Metallic luster) For MS and MV	GR Green	D Double For MS and MV		
MH	4L 304L SS	RT Male BSPT	4 1/4"			E Ethylene Propylene (EPDM)	V Vernier (MH Series: Metallic luster) (Other Series: Black)	J Blue	R Cross For MS and MV		
	S1 321 SS	FMS Female Metric Thread (for RG-M)	6 6 mm			N Neoprene (CR)		O Orange			
	B Brass	MS Male Metric Thread (for RG-M)				Z FFKM		Y Yellow			
		FRP Female BSPP (for RP)				G Graphite (MH Only)					
		BP Male BSPP (for RG)									
		FL Fractional Tube Fitting									
		ML Metric Tube Fitting									
		FO FO Fitting									
		FR Male FR Fitting									

Note: "Ordering Number Description" is a reference to understand the combination rules of FITOK product part number. Not all combinations are available.

1. Cleaning and Packaging:
   FC-01: Standard cleaning and packaging for general industrial procedures.
   FC-02: Special cleaning and packaging for wetted system components to ensure compliance with product cleaning requirement of ASTM G93 Level C.

Bellows-Sealed Valves

Bellows-Sealed Valves  B-138

Bellows-Sealed Valves

SW and SU Series



FITOK

Contents

Bellows-Sealed Valves
SW Series



B-140

Bellows-Sealed Valves
SU Series



B-146

Notes:

◎ Packing may need to be adjusted during the use of SU series bellows-sealed valves.
◎ For better maintenance, FITOK bellows-sealed valves should be stored in the half-open position.

Bellows-Sealed Valves

SW Series

Features



- Working pressure up to: 1000 psig (69.0 bar)
- Working temperature: -20°F to 842°F (-28°C to 450°C)
- Variety of end connections
- Body material: 316 SS, brass
- Hydraulic-formed multilayer bellows for longer cycle life
- Nonrotating stem tip eliminates galling within the seat area
- Externally pressurized bellows design for maximum strength
- Strictly controlled bellows stroke to improve safety and cycle life
- Replaceable bellows and stem tip assembly
- Regulating, conical and spherical stem tips available
- Handle color options are available
- Panel and bottom mounting available
- Every FITOK bellows-sealed valve leak tested with helium at the seat, envelope and all seals (maximum allowable leak rate: 4×10^{-9} std cm^3/s)

Pressure vs. Temperature

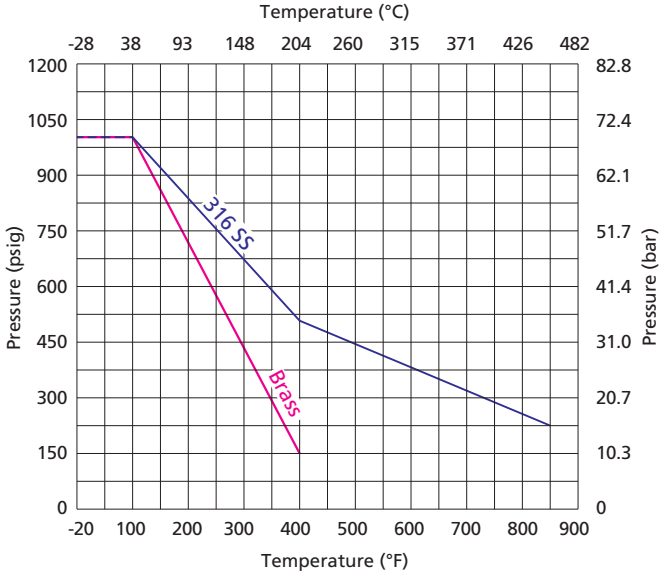

200°F (93°C) max. with PCTFE stem tip (soft tip).

Flow Coefficient vs. Turns Open

Regulating Stem

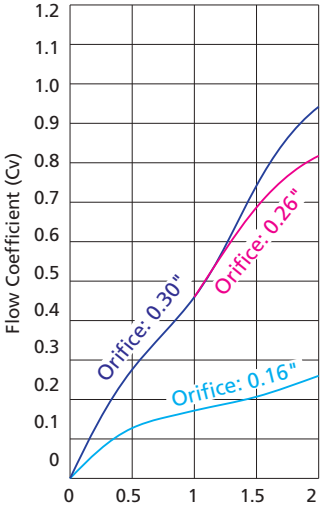

Number of Turns Open

Standard Materials of Construction

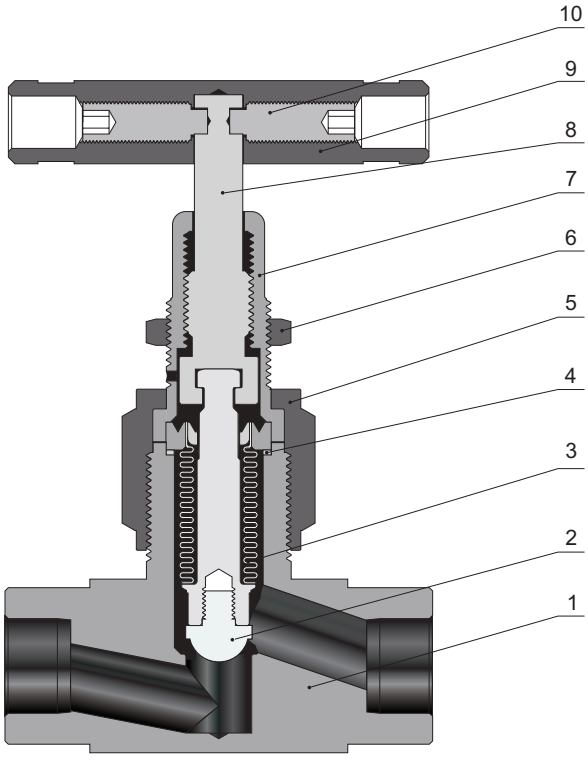

Tip Types



Conical Tip | Regulating Tip | Spherical Tip

Component			Valve Body Material Grade/ASTM Specification	
			316 SS	Brass
1	Body		316 SS/A182	Brass/B283
2	Stem Tip	Regulating	316 SS/A479 or Stellite	
		Conical	PCTFE/D1430 or 316 SS/A479 or Stellite	
		Spherical	Stellite	
3	Bellows		316L SS/A240	
	Stem		316 SS/A479	
	Weld Ring		316 SS/A479	
4	Gasket		Silver-plated 316 SS/A269	
5	Bonnet Nut		316 SS/A479	Brass/B16
6	Panel Mount Nut		Stainless steel	Brass/B16
7	Bonnet		316 SS/A479	Brass/B16
8	Actuator		316 SS/A479	316 SS/A479
9	Handle		6061/B211 or stainless steel	
10	Set Screws		Zinc-plated carbon steel	
Non-wetted Lubricant			Molybdenum disulfide	

Contact FITOK Group or our authorized distributors for valves of other materials.

Dimensions

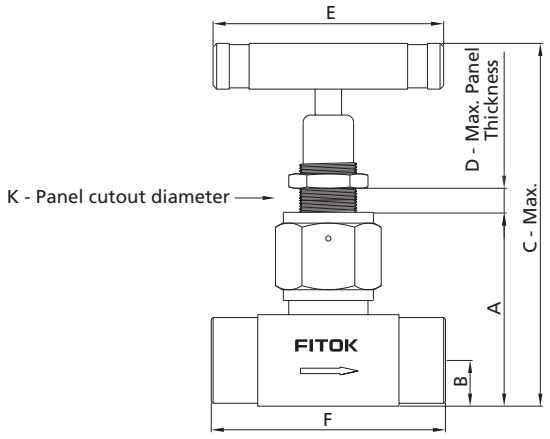

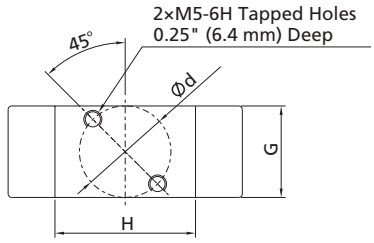

Basic Ordering Number	Connection Type and Size		Orifice in. (mm)	Cv	Dimensions, in. (mm)									
	Inlet	Outlet			A	B	C	D	E	F	G	H	K	Ød
SW□□-FL4-2-	1/4" FITOK		0.16 (4.1)	0.36	2.16 (54.8)	0.54 (13.7)	4.05 (102.8)	0.39 (10.0)	2.50 (63.5)	2.46 (62.5)	1.00 (25.4)	1.06 (26.9)	0.65 (16.4)	1.00 (25.4)
SW□□-FL6-3-	3/8" FITOK		0.26 (6.6)	0.85	2.20 (55.8)	0.54 (13.7)	4.09 (103.8)	0.39 (10.0)	2.50 (63.5)	3.09 (78.5)	1.10 (25.4)	1.57 (39.9)	0.65 (16.4)	1.00 (25.4)
SW□□-FL8-5-	1/2" FITOK		0.30 (7.6)	1.20	2.16 (54.8)	0.54 (13.7)	4.05 (102.8)	0.39 (10.0)	2.50 (63.5)	3.30 (83.8)	1.13 (25.4)	1.57 (40.0)	0.65 (16.4)	1.00 (25.4)
SW□□-ML6-2-	6 mm FITOK		0.16 (4.1)	0.36	2.16 (54.8)	0.54 (13.7)	4.05 (102.8)	0.39 (10.0)	2.50 (63.5)	2.46 (62.5)	1.00 (25.4)	1.07 (27.1)	0.65 (16.4)	1.00 (25.4)
SW□□-ML10-4-	10 mm FITOK		0.28 (7.1)	1.00	2.20 (55.8)	0.54 (13.7)	4.09 (103.8)	0.39 (10.0)	2.50 (63.5)	3.11 (79.0)	1.00 (25.4)	1.57 (39.8)	0.65 (16.4)	1.00 (25.4)
SW□□-ML12-5-	12 mm FITOK		0.30 (7.6)	1.20	2.20 (55.8)	0.54 (13.7)	4.09 (103.8)	0.39 (10.0)	2.50 (63.5)	3.30 (83.8)	1.00 (25.4)	1.57 (39.8)	0.65 (16.4)	1.00 (25.4)
SW□□-TS4-2-	1/4" Tube Socket Weld		0.16 (4.1)	0.36	2.20 (55.8)	0.54 (13.7)	4.09 (103.8)	0.39 (10.0)	2.50 (63.5)	1.68 (42.7)	1.00 (25.4)	1.00 (25.4)	0.65 (16.4)	1.00 (25.4)
SW□□-TS6-4-	3/8" Tube Socket Weld		0.28 (7.1)	1.00	2.20 (55.8)	0.54 (13.7)	4.09 (103.8)	0.39 (10.0)	2.50 (63.5)	2.27 (57.7)	1.00 (25.4)	1.51 (38.4)	0.65 (16.4)	1.00 (25.4)
SW□□-TS8-5-	1/2" Tube Socket Weld		0.30 (7.6)	1.20	2.20 (55.8)	0.54 (13.7)	4.09 (103.8)	0.39 (10.0)	2.50 (63.5)	2.27 (57.7)	1.00 (25.4)	1.25 (31.7)	0.65 (16.4)	1.00 (25.4)
SW□□-TB8-3-	1/2×0.095" Tube Butt Weld		0.26 (6.6)	0.85	2.20 (55.8)	0.54 (13.7)	4.09 (103.8)	0.39 (10.0)	2.50 (63.5)	2.27 (57.7)	1.00 (25.4)	1.48 (37.7)	0.65 (16.4)	1.00 (25.4)
SW□□-FFR4-2-	1/4" Female FR		0.16 (4.1)	0.36	2.16 (54.8)	0.54 (13.7)	4.05 (102.8)	0.39 (10.0)	2.50 (63.5)	2.76 (70.1)	1.00 (25.4)	1.02 (25.8)	0.65 (16.4)	1.00 (25.4)
SW□□-FFR8-5-	1/2" Female FR		0.30 (7.6)	1.20	2.20 (55.8)	0.54 (13.7)	4.09 (103.8)	0.39 (10.0)	2.50 (63.5)	3.12 (79.2)	1.00 (25.4)	1.25 (31.75)	0.65 (16.4)	1.00 (25.4)
SW□□-FR4-2-	1/4" Male FR		0.16 (4.1)	0.36	2.16 (54.8)	0.54 (13.7)	4.05 (102.8)	0.39 (10.0)	2.50 (63.5)	2.24 (56.9)	1.00 (25.4)	1.00 (25.4)	0.65 (16.4)	1.00 (25.4)
SW□□-FR8-5-	1/2" Male FR		0.30 (7.6)	1.20	2.20 (55.8)	0.54 (13.7)	4.09 (103.8)	0.39 (10.0)	2.50 (63.5)	3.00 (76.2)	1.13 (28.7)	1.50 (38.1)	0.65 (16.4)	1.00 (25.4)

1. FITOK means FITOK double ferrule tube fittings, FR means metal gasket seal fittings.
2. Valve dimensions of FITOK tube fittings in port types listed are dimensions when nuts are finger-tightened. All dimensions are for reference only and are subject to change. For dimensions not shown above, please contact FITOK Group or our authorized distributors.
3. Sizes and types listed are standard. Other sizes and types are available upon request. For special sizes and types, please contact FITOK Group or our authorized distributors.

Pneumatic Actuators





Features

◎ Low actuation pressure
◎ Opens and closes quickly and reliably
◎ Rotatable port for normally closed actuators allows easy installation
◎ Normally open actuators black capped for identification

Actuation Modes

◎ Normally closed—air opens, spring closes
◎ Normally open—air closes, spring opens

Technical Data

Actuator Type	Actuator Pressure Rating psig (bar)	Valve and Actuator Working Temperature °F (°C)	Valve Working Pressure psig (bar)
Normally Closed	65.3~79.8 (4.5~5.5)	-18~200 (-28~93)	145 (10.0)
Normally Open	72.5~87.0 (5.0~6.0)		500 (34.4)

Materials of Construction

Component	Material
Housing	Anodized Aluminium
Stem Tip	PCTFE

For valve components, refer to "Standard Materials of Construction" on page B-133.

Dimensions

Normally Closed

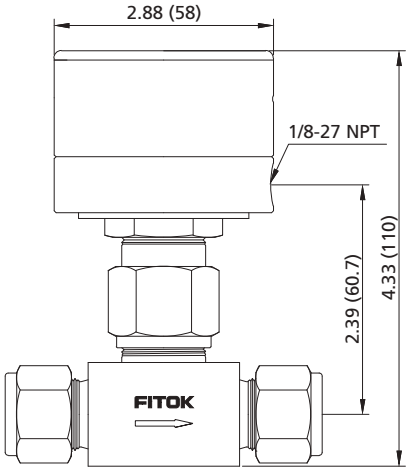

Normally Open

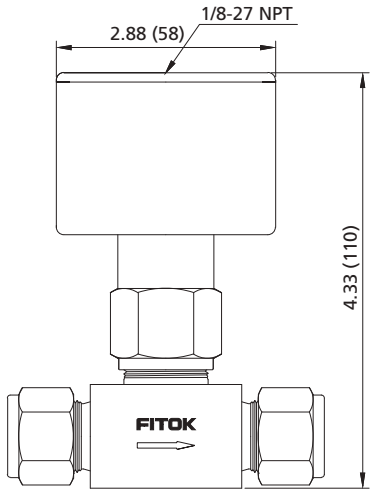

Basic Ordering Number	Cv
SW□□-□□-2-KN-C/O	0.36
SW□□-□□-3-KN-C/O	0.85
SW□□-□□-5-KN-C/O	1.0

C designates normally closed models; O designates normally open models.

Ordering Number Description

SWSS – FL8 – ML10 – 5 – WR – L – BW – SF2

Series	Body Material	Inlet Type	Inlet Size	Outlet Type	Outlet Size	Orifice Size	Stem Tip Material and Type	Actuator	Body-to-Bellows Seal	Special Application	Cleaning and Packaging
SW	SS 316 SS 6L 316L SS S4 304 SS 4L 304L SS B Brass	TS Fractional Tube Socket Weld MTS Metric Tube Socket Weld TB Fractional Tube Butt Weld MTB Metric Tube Butt Weld PS Pipe Socket Weld PB Pipe Butt Weld FL Fractional Tube Fitting ML Metric Tube Fitting UFB Rotatable Fractional Tube Butt Weld UMB Rotatable Metric Tube Butt Weld FFR Female FR Fitting FR Male FR Fitting	2 1/8" 4 1/4" 6 3/8" or 6 mm 8 1/2" or 1/2×0.095" or 8 mm 10 10 mm 12 3/4" or 12 mm 14 14 mm	Same as Inlet Specified in the same way as Inlet type and size		2 0.16" (4.1 mm) 3 0.26" (6.6 mm) 4 0.28" (7.1 mm) 5 0.30" (7.6 mm)	Stellite Spherical R Stainless Steel Regulating KN PCTFE Conical WR Stellite Regulating N Stainless Steel Conical WN Stellite Conical	Green Aluminum Bar L Black Aluminum Bar I Red Aluminum Bar J Blue Aluminum Bar M Stainless Steel Bar B Black nylon Knob — Only applicable to valves with orifice size of 0.16" (4.1 mm) T Toggle handle — Only applicable to valves with orifice size of 0.16" (4.1 mm), PCTFE conical tip and max. working pressure up to 100 psig (6.9 bar). C Normally Closed Pneumatic Actuator O Normally Open Pneumatic Actuator	Gasket Seal BW Welded Seal	No S NACE MR0175 CE CE Certified	FC-01 F2 FC-02

Note: "Ordering Number Description" is a reference to understand the combination rules of FITOK product part number. Not all combinations are available.

1. Cleaning and Packaging:
   FC-01: Standard cleaning and packaging for general industrial procedures.
   FC-02: Special cleaning and packaging for wetted system components to ensure compliance with product cleanliness requirement of ASTM G93 Level C.
2. CE certification is available. For more information, please contact FITOK group or our authorized distributors.

Bellows-Sealed Valves

SU Series

Features



- ◎ Working pressure up to: 2500 psig (172 bar)
- ◎ Working temperature: -20°F to 842°F (-28°C to 450°C)
- ◎ Variety of end connections
- ◎ 316 SS body material
- ◎ Upper packing provides secondary containment system above the bellows
- ◎ Hydraulic-formed multilayer bellows for longer cycle life
- ◎ Nonrotating stem tip eliminates galling within the seat area
- ◎ Strictly controlled bellows stroke to improve safety and cycle life
- ◎ Replaceable bellows and stem tip assembly
- ◎ Regulating, conical, and spherical stem tips available
- ◎ Panel and bottom mounting available
- ◎ Double lock-pins enable steady and durable fastening of the handle
- ◎ Handle color options are available
- ◎ Every FITOK bellows-sealed valve leak tested with helium at the seat, envelope and all seals (maximum allowable leak rate : 4×10^{-9} std cm^3/s)

Pressure vs. Temperature

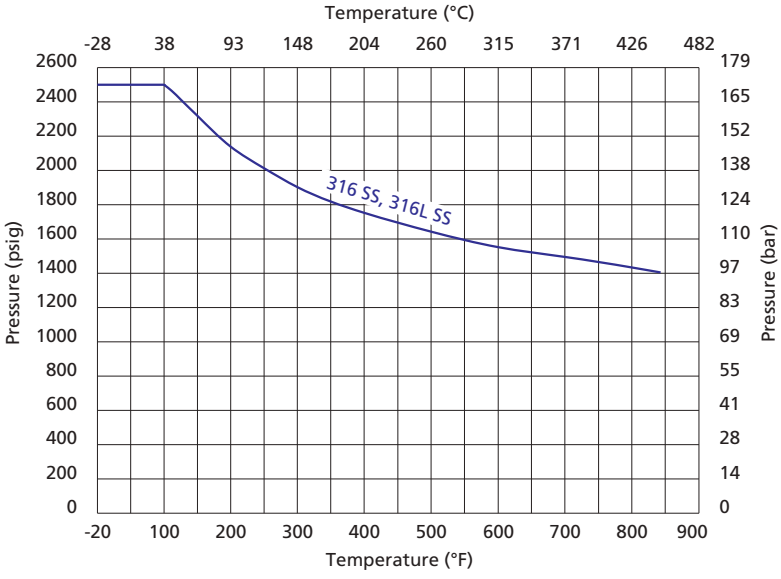

200°F (93°C) max. with PCTFE stem tip (soft tip).

Flow Coefficient vs. Turns Open

Regulating Stem

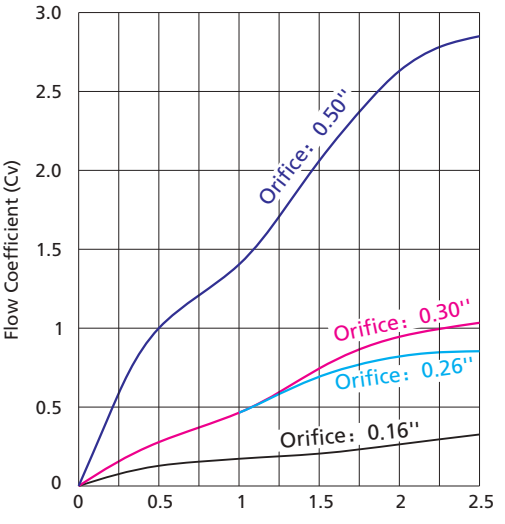

Number of Turns Open

Standard Materials of Construction

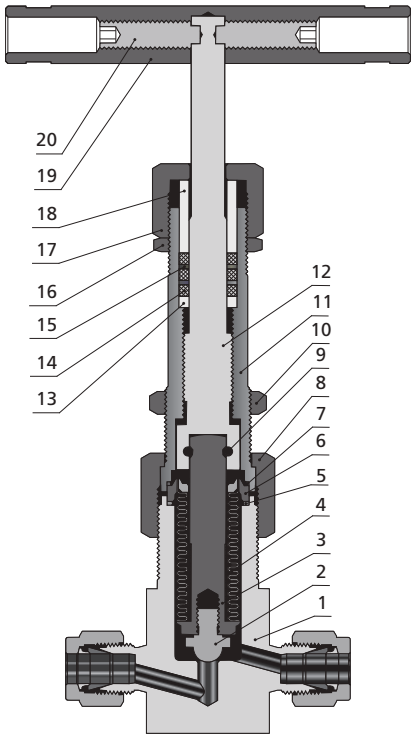

Tip Types



Conical Tip Regulating Tip Spherical Tip

Component			Valve Body Material Grade/ASTM Specification
			316 SS
1	Body		316 SS/A182 or A479
2	Stem Tip	Regulating	316 SS/A479 or Stellite
		Conical	PCTFE/D1430 or 316 SS/A479 or Stellite
		Spherical	Stellite
3	Stem		316 SS/A479
4	Bellows		316L SS/A240
5	Gasket		Sliver-plated 316L SS/A269
6	Weld Ring		316 SS/A479
7	Gasket		Sliver-plated 316L SS/A269
8	Bonnet Nut		316 SS/A479
9	Pin		Stainless steel
10	Panel Mount Nut		Stainless steel
11	Bonnet		316 SS/A479
12	Actuator		440C SS/A479
13	Packing washer		316 SS/A479
14	Packing		Graphite
15	Packing washer		316 SS/A479
16	Lock Nut		Stainless steel
17	Packing Nut		316 SS/A479
18	Gland		316 SS/A479
19	Handle		6061/B210 /Stainless steel
20	Set Screws		Zinc-plated carbon steel

Contact FITOK Group or our authorized distributors for valves of other materials.

Dimensions

Orifice: ⩽ 0.30"

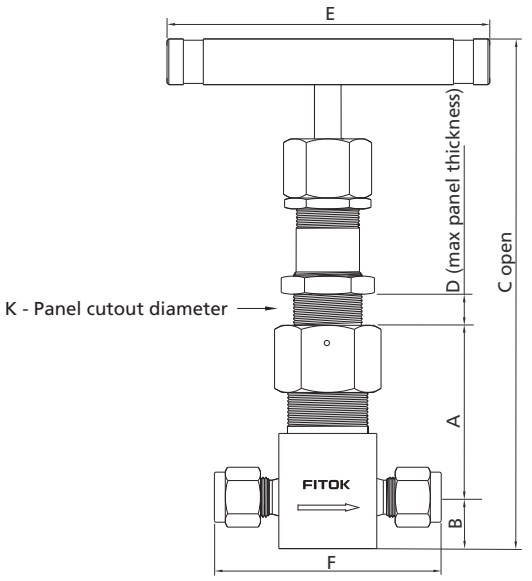

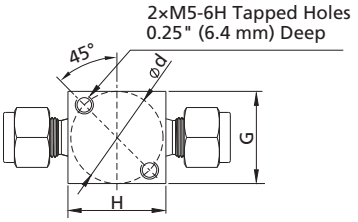

Basic Ordering Number	End Connections		Orifice in. (mm)	Cv	Dimensions, in. (mm)									
	Inlet Size	Outlet Size			A	B	C	D	E	F	G	H	K	∅d
SU□□-FL4-2-	1/4" FITOK		0.16 (4.10)	0.36	1.86 (47.3)	0.54 (14.2)	6.34 (161.0)	0.38 (9.7)	3.50 (88.9)	2.46 (62.5)	1.00 (25.4)	1.07 (27.2)	0.77 (19.5)	1.00 (25.4)
SU□□-FL6-3-	3/8" FITOK		0.26 (6.60)	0.85	1.94 (49.3)	0.50 (12.7)	6.36 (161.5)	0.38 (9.7)	3.50 (88.9)	3.09 (78.5)	1.13 (28.7)	1.57 (40.0)	0.77 (19.5)	1.13 (28.7)
SU□□-FL8-5-	1/2" FITOK		0.30 (7.60)	1.20	1.98 (50.3)	0.50 (12.7)	6.40 (162.5)	0.38 (9.7)	3.50 (88.9)	3.30 (83.8)	1.13 (28.7)	1.57 (40.0)	0.77 (19.5)	1.13 (28.7)
SU□□-ML6-2-	6 mm FITOK		0.16 (4.10)	0.36	1.86 (47.3)	0.56 (14.2)	6.34 (161.0)	0.38 (9.7)	3.50 (88.9)	2.46 (62.5)	1.00 (25.4)	1.05 (26.6)	0.77 (19.5)	1.00 (25.4)
SU□□-ML10-4-	10 mm FITOK		0.28 (7.10)	1.00	1.97 (50.1)	0.50 (12.7)	6.39 (162.3)	0.38 (9.7)	3.50 (88.9)	3.11 (79.0)	1.13 (28.7)	1.57 (40.0)	0.77 (19.5)	1.13 (28.7)
SU□□-ML12-4-	12 mm FITOK		0.28 (7.10)	1.00	1.97 (50.1)	0.50 (12.7)	6.39 (162.3)	0.38 (9.7)	3.50 (88.9)	3.30 (83.8)	1.13 (28.7)	1.57 (40.0)	0.77 (19.5)	1.13 (28.7)
SU□□-TS4-2-	1/4" Tube Socket Weld		0.16 (4.10)	0.36	1.86 (47.3)	0.56 (14.2)	6.34 (161.0)	0.38 (9.7)	3.50 (88.9)	1.68 (42.7)	1.00 (25.4)	1.00 (25.4)	0.77 (19.5)	1.00 (25.4)
SU□□-TS6-4-	3/8" Tube Socket Weld		0.28 (7.10)	1.00	1.97 (50.1)	0.50 (12.7)	6.39 (162.3)	0.38 (9.7)	3.50 (88.9)	2.27 (57.7)	1.13 (28.7)	1.52 (38.6)	0.77 (19.5)	1.13 (28.7)
SU□□-TS8-5-	1/2" Tube Socket Weld		0.30 (7.60)	1.20	1.98 (50.3)	0.50 (12.7)	6.40 (162.5)	0.38 (9.7)	3.50 (88.9)	2.27 (57.7)	1.13 (28.7)	1.52 (38.6)	0.77 (19.5)	1.13 (28.7)
SU□□-FFR4-2-	1/4" Female FR		0.16 (4.10)	0.36	1.86 (47.3)	0.56 (14.2)	6.34 (161.0)	0.38 (9.7)	3.50 (88.9)	2.76 (70.1)	1.00 (25.4)	1.00 (25.4)	0.77 (19.5)	1.00 (25.4)
SU□□-FFR8-5-	1/2" Female FR		0.30 (7.60)	1.20	1.98 (50.3)	0.50 (12.7)	6.40 (162.5)	0.38 (9.7)	3.50 (88.9)	3.12 (79.2)	1.13 (28.7)	1.52 (38.6)	0.77 (19.5)	1.13 (28.7)
SU□□-FR4-2-	1/4" Male FR		0.16 (4.10)	0.36	1.86 (47.3)	0.56 (14.2)	6.34 (161.0)	0.38 (9.7)	3.50 (88.9)	2.24 (56.9)	1.00 (25.4)	1.00 (25.4)	0.77 (19.5)	1.00 (25.4)
SU□□-FR8-5-	1/2" Male FR		0.30 (7.60)	1.20	1.98 (50.3)	0.50 (12.7)	6.40 (162.5)	0.38 (9.7)	3.50 (88.9)	3.00 (76.2)	1.13 (28.7)	1.52 (38.6)	0.77 (19.5)	1.13 (28.7)

1. FITOK means FITOK double ferrule tube fittings, FR means metal gasket seal fittings.
2. Valve dimensions of FITOK tube fittings in port types listed are dimensions when nuts are finger-tightened. All dimensions are for reference only and are subject to change. For dimensions not shown above, please contact FITOK Group or our authorized distributors.
3. The sizes and types listed are standard. Other sizes and types are available upon request. For special sizes and types, refer to ordering information.

Dimensions

Orifice: 0.50"

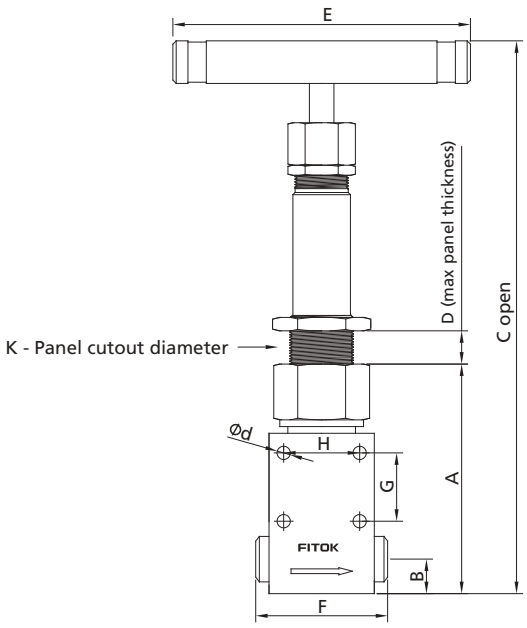

Orifice: 0.61"

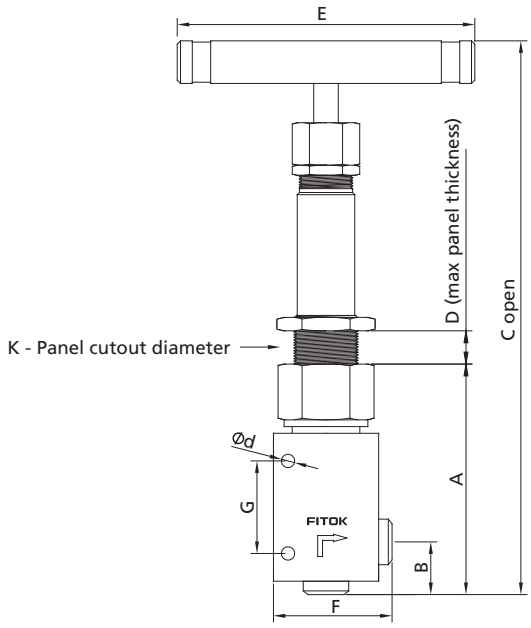

Basic Ordering Number	End Connections		Orifice in. (mm)	Cv	Dimensions, in. (mm)									
	Inlet Size	Outlet Size			A	B	C	D	E	F	G	H	K	Ød
SU□□-TS12-8-	3/4" Tube Socket Weld		0.50 (12.7)	3.10	5.45 (138.5)	1.00 (25.4)	11.60 (295)	0.59 (14.9)	5.00 (127)	2.44 (62.0)	1.25 (31.8)	1.46 (37.0)	1.2 (30.5)	0.27 (6.9)
SU□□-PB12-8-	3/4×SCH80 Pipe Butt Weld		0.50 (12.7)	3.10	5.45 (138.5)	1.00 (25.4)	11.60 (295)	0.59 (14.9)	5.00 (127)	2.44 (62.0)	1.25 (31.8)	1.46 (37.0)	1.2 (30.5)	0.27 (6.9)
SU□□-TS12-8A-	3/4" Tube Socket Weld		0.61 (15.5)	5.30	5.45 (138.5)	1.44 (36.6)	11.60 (295)	0.59 (14.9)	5.00 (127)	2.49 (63.2)	1.60 (40.6)	——	1.2 (30.5)	0.27 (6.9)
Su□□-PB12-8A-	3/4×SCH80 Pipe Butt Weld		0.61 (15.5)	5.30	5.45 (138.5)	1.44 (36.6)	11.60 (295)	0.59 (14.9)	5.00 (127)	2.49 (63.2)	1.60 (40.6)	——	1.2 (30.5)	0.27 (6.9)
SU□□-TB16-8A-	1×0.134" Tube Butt Weld		0.61 (15.5)	5.30	5.45 (138.5)	1.44 (36.6)	11.60 (295)	0.59 (14.9)	5.00 (127)	2.49 (63.2)	1.60 (40.6)	——	1.2 (30.5)	0.27 (6.9)

Pneumatic Actuators







Features

◎ Low actuation pressure
◎ Opens and closes quickly and reliably
◎ Aluminum and stainless steel components

Actuation Modes

◎ Normally closed—air opens, spring closes
◎ Normally open—air closes, spring opens

Technical Data

Orifice	Working Temperature °F (°C)	Pressure Rating psig (bar)
⩽0.30"	-20~200 (-28~93)	80~94 (5.5~6.5)
0.50"		87~116 (6~8)

For valve ratings, please refer to Pressure VS. Temperature on page B-138.

Materials of Construction

Component	Material
Housing	Anodized Aluminium
Stem Tip	Stellite
Bracket	Stainless Steel

For valve components, refer to "Standard Materials of Construction" on page B-139.

Dimensions

Dimensions are for reference only and subject to change

Normally closed, orifice ⩽0.30"

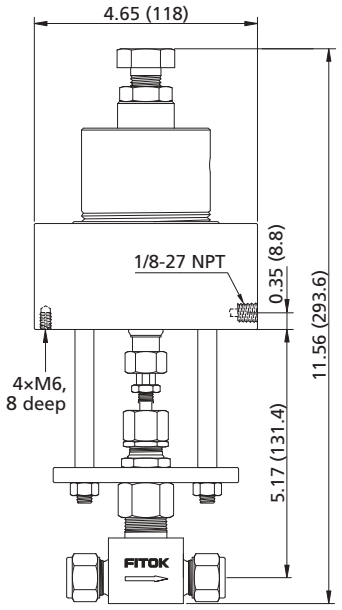

Normally open, orifice ⩽0.30"

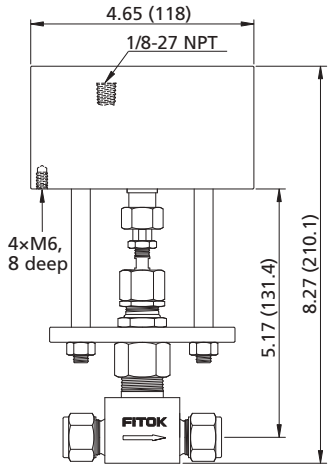

Normally closed, orifice 0.50"

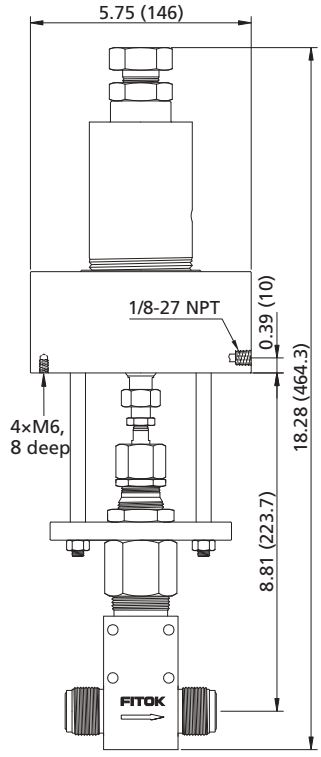

Ordering Information

To order valves with pneumatic actuators, add -**C** or -**O** to the valve ordering number. C designates normally closed models; O designates normally open models.

SU□□-□□-2/3/4/5-**C/O**

SU□□-□□-8-**C**

Low Temperature Applications

SU series bellows-sealed valves for temperatures ranging from -320°F to 400°F (-196°C to 204°C) are available, featuring PTFE packing. To order, please add -LT to the valve ordering number.

Example: SUSS-FL4-5-LT

SUSS-FL12-8-LT

Pressure vs. Temperature

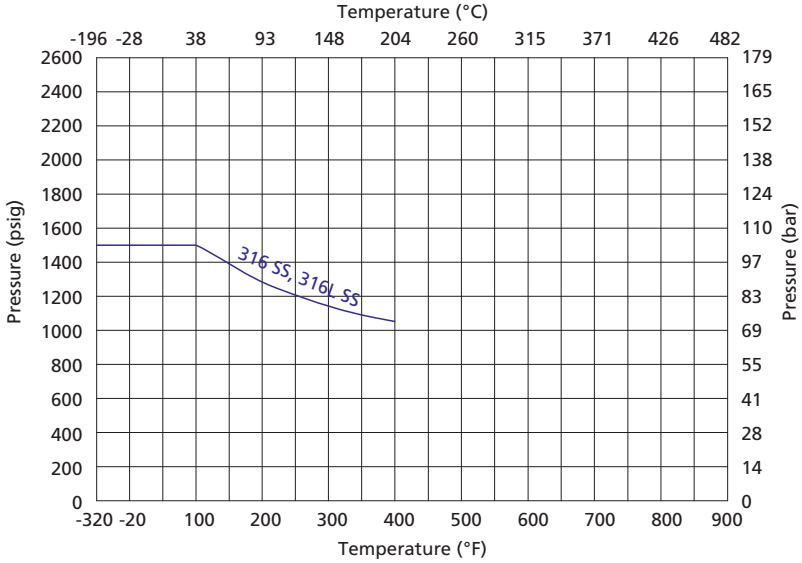

Temperature rating is limited to 200°F (93°C) max. with PCTFE stem tip (soft tip).

Ordering Number Description

SUSS – FL8 – ML10 – 5 – WR – L – BW – SF2

Series	Body Material	Inlet Type	Inlet Size	Outlet Type	Outlet Size	Orifice Size	Stem Tip Material and Type	Actuator	Body-to-Bellows Seal	Special Application	Cleaning and Packaging
SU	SS 316 SS	TS Fractional Tube Socket Weld	2 1/8"	Same as Inlet Type and Size	Same as Inlet Type and Size	2 0.16" (4.1 mm)	Stellite Spherical	Green Aluminum Bar		No	FC-01
	6L 316L SS	MTS Metric Tube Socket Weld	4 1/4"	Specified in the same way as Inlet Type and Inlet Size	Specified in the same way as Inlet Type and Inlet Size	3 0.26" (6.60 mm)	R Stainless Steel Regulating	L Black Aluminum Bar		S NACE MR0175	F2 FC-02
	S4 304 SS	TB Fractional Tube Butt Weld	6 3/8" or 6 mm			4 0.28" (7.1 mm)	KN PCTFE Conical	I Red Aluminum Bar		CE CE Certified	
	4L 304L SS	MTB Metric Tube Butt Weld	8 1/2" or 8 mm			5 0.30" (7.6 mm)	WR Stellite Regulating	J Blue Aluminum Bar		LT Low Temperature	
		PS Pipe Socket Weld	10 10 mm			8 0.50" (12.7 mm)	N Stainless Steel Conical	M Stainless Steel Bar			
		PB Pipe Butt Weld	12 3/4" or 3/4×SCH80 or 12 mm			8A 0.61" (15.5 mm)	WN Stellite Conical	C Normally Closed Pneumatic Actuator			
		FL Fractional Tube Fitting	14 14 mm					O Normally Open Pneumatic Actuator			
		ML Metric Tube Fitting	16 1" or 1×0.134" or 16 mm								
		UFB Rotatable Fractional Tube Butt Weld	18 18 mm								
		UMB Rotatable Metric Tube Butt Weld									
		FFR Female FR Fitting									
		FR Male FR Fitting									

Body-to-Bellows Seal	
	Gasket Seal
BW	Welded Seal

Note: "Ordering Number Description" is a reference to understand the combination rules of FITOK product part number. Not all combinations are available.

1. Cleaning and Packaging:
   FC-01: Standard cleaning and packaging for general industrial procedures.
   FC-02: Special cleaning and packaging for wetted system components to ensure compliance with product cleanliness requirement of ASTM G93 Level C.
2. CE certification is available. For more information, please contact FITOK group or our authorized distributors.
3. LT: Apply to low temperature applications with PTFE auxiliary packing, working temperature -320~400°F (-196~204°C).

Check Valves, Relief Valves

Check Valves  B-154

Proportional Relief Valves  B-169

Check Valves

CV, CH, CO, CA, COA and CL Series



Check Valves

CV, CH, CO, CA, COA and CL Series



Features

CV Series

- Resilient O-ring seat design for leak free sealing
- Working pressure up to: 3000 psig (207 bar)
- Working temperature: -10°F to 375°F (-23°C to 190°C)
- Cracking pressure: 1/3 to 25 psig (0.02 to 1.7 bar)
- Variety of end connections and materials available
- Non-adjustable cracking pressure, mountable in any directions

CH Series

- Seat ring continuously cleaned by media, avoiding secondary pollution
- Working pressure up to: 6000 psig (414 bar)
- Working temperature: -10°F to 400°F (-23°C to 204°C)
- Cracking pressure: 1/3 to 25 psig (0.02 to 1.7 bar)
- Variety of end connections and materials available
- Non-adjustable cracking pressure, mountable in any directions
- ECE R110 type approved valves for use in CNG/NGV application available

CO Series

- Compact design, one-piece body
- Working pressure up to: 3000 psig (207 bar)
- Working temperature: -10°F to 375°F (-23°C to 190°C)
- Cracking pressure: 1/3 to 25 psig (0.02 to 1.7 bar)
- Variety of end connections and materials available
- Non-adjustable cracking pressure, mountable in any directions

CA Series

- Working pressure up to: 3000 psig (207 bar)
- Working temperature: -10°F to 375°F (-23°C to 190°C)
- Cracking pressure: 3 to 600 psig (0.2 to 41.4 bar)
- Variety of end connections and materials available
- Various springs available
- Adjustable cracking pressure, mountable in any directions

COA Series

- Compact design, one-piece body
- Working pressure up to: 3000 psig (207 bar)
- Working temperature: -10°F to 375°F (-23°C to 190°C)
- Cracking pressure: 3 to 600 psig (0.2 to 41.4 bar)
- Variety of end connections and materials available
- Various springs available
- Adjustable cracking pressure, mountable in any directions

CL Series

- Working pressure up to: 6000 psig (414 bar)
- Working temperature: -65°F to 900°F (-53°C to 482°C)
- Rugged, all-stainless steel construction
- Union bonnet design, horizontal installation with bonnet nut on top
- Reverse flow coefficient less than 0.1% of forward flow coefficient

1. Besides CL series, other check valves are all coated with lubricants like silicone base and molybdenum disulfide base.
2. Please contact FITOK Group or our authorized distributors for other materials.
3. PTFE-coated spring is an option for CV, CO, CA, and COA series check valves. For more details, please contact FITOK Group or our authorized distributors.
4. Every valve is tested with nitrogen for leak-tight performance at its maximum working pressure.

Cracking Pressure and Reseal Pressure

Cracking pressure - the upstream pressure at which the first indication of flow occurs.
Reseal pressure - the pressure at which there is no indication of flow.
Back Pressure - differential pressure between inlet and outlet pressures.

Series	Nominal Cracking Pressure psig (bar)	Cracking Pressure Range psig (bar)	Reseal Pressure Range psig (bar)	
CV	1/3 (0.02)	0 to 3 (0 to 0.21)	≤6 (0.42)	Back Pressure
	1 (0.06)	0 to 4 (0 to 0.28)	≤6 (0.42)	Back Pressure
	3 (0.21)	1 to 5 (0.06 to 0.34)	≤6 (0.42)	Back Pressure
	10 (0.68)	7 to 15 (0.49 to 1.1)	≥3 (0.21)	Inlet Pressure
	25 (1.7)	20 to 30 (1.4 to 2.1)	≥17 (1.2)	Inlet Pressure
CH	1/3 (0.02)	0 to 3 (0 to 0.21)	≤6 (0.42)	Back Pressure
	1 (0.06)	0 to 4 (0 to 0.28)	≤5 (0.35)	Back Pressure
	3 (0.21)	1 to 5 (0.06 to 0.34)	≤2 (0.14)	Back Pressure
	10 (0.68)	7 to 15 (0.49 to 1.1)	≥3 (0.21)	Inlet Pressure
	25 (1.7)	20 to 30 (1.4 to 2.1)	≥17 (1.2)	Inlet Pressure
CO	1/3 (0.02)	0 to 3 (0 to 0.21)	6 to 20 (0.42 to 1.4)	Back Pressure
	1 (0.06)	0 to 4 (0 to 0.28)	5 to 20 (0.35 to 1.4)	Back Pressure
	3 (0.21)	1 to 5 (0.06 to 0.34)	3 to 20 (0.21 to 1.4)	Back Pressure
	10 (0.68)	7 to 15 (0.49 to 1.1)	3 to 10 (0.21 to 0.68)	Back Pressure
	25 (1.7)	20 to 30 (1.4 to 2.1)	≥5 (0.35)	Inlet Pressure
CA	3 to 50 (0.21 to 3.4) 50 to 150 (3.4 to 10.3) 150 to 350 (10.3 to 24.1) 350 to 600 (24.1 to 41.3)	———	Refer to the chart below	
COA				

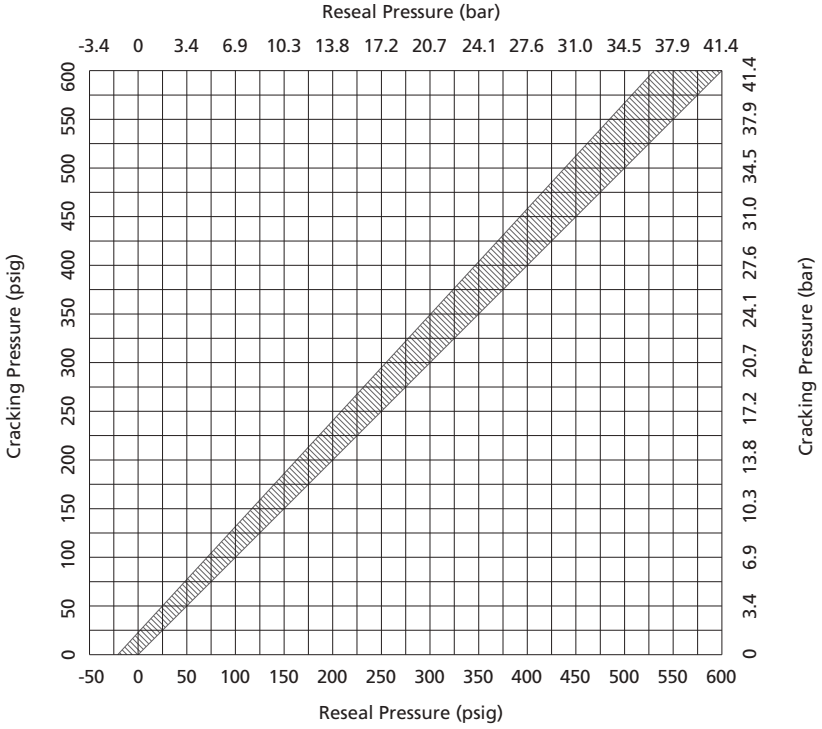

Pressure vs. Temperature

CV Series

FKM O-ring in 316 SS Body and Buna N in Brass Body

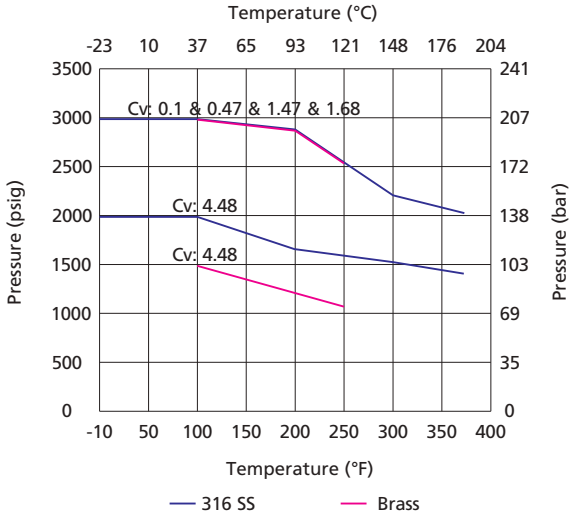

CH Series

FKM O-ring in 316 SS Body

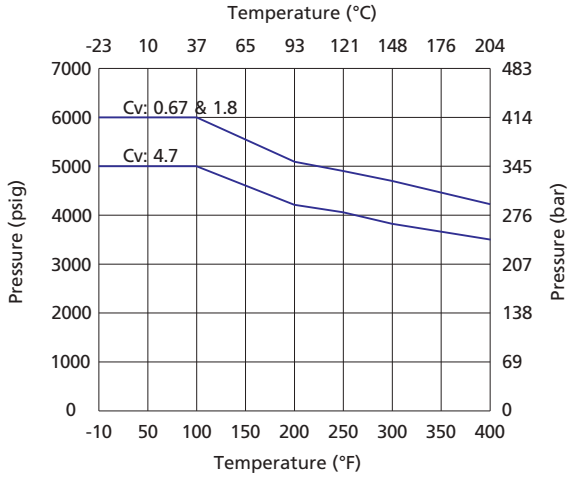

The pressure rating of CH Series check valve is restricted by the connection types. For details please refer to B-148.

CO, CA and COA Series

FKM O-ring in 316 SS Body and Buna N in Brass Body

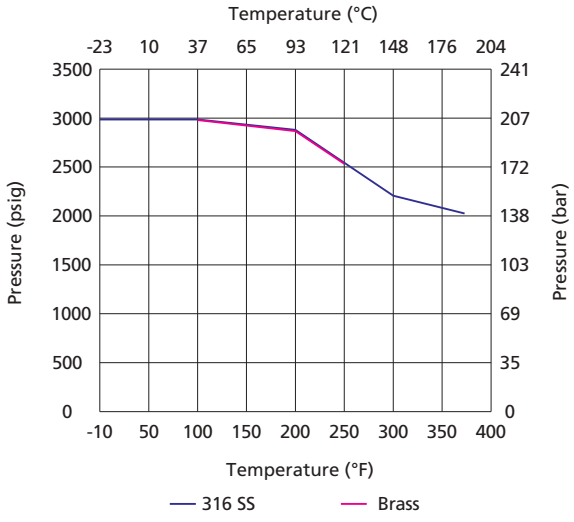

CL Series

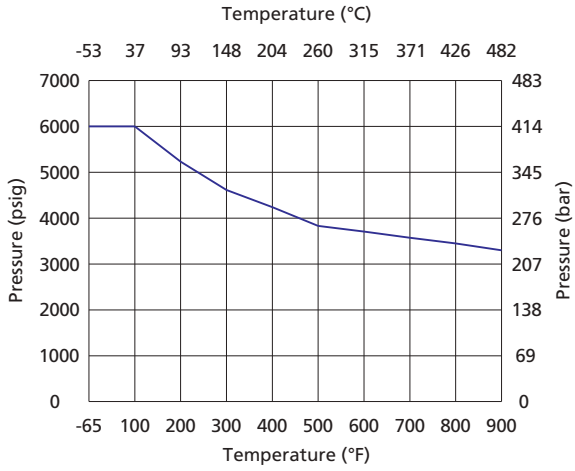

FITOK

Standard Materials of Construction

CV Series

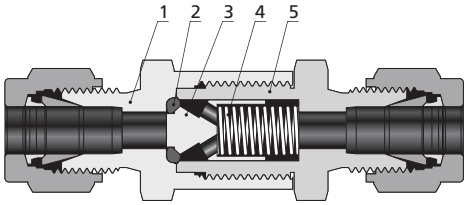

Component		Material Grade/ASTM Specification	
		316 SS	Brass
1	Inlet Body	316 SS/A479	Brass C36000/B16
2	O-ring	Fluorocarbon FKM	Buna N
3	Poppet	316 SS/A479	Brass C36000/B16
4	Spring	302 SS/A313	302 SS/A313
5	Outlet Body	316 SS/A479	Brass C36000/B16

CH Series

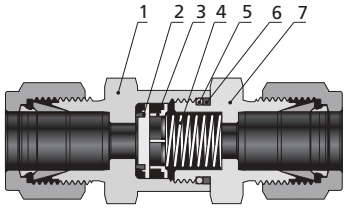

Component		Material Grade/ASTM Specification
1	Inlet Body	316 SS/A479
2	Poppet	Fluorocarbon-FKM-bonded 316L SS/A479
3	Poppet Stop	316 SS/A479
4	Spring	302 SS/A313
5	O-ring	Fluorocarbon FKM
6	Backup Ring	PTFE/D1710
7	Outlet Body	316 SS/A479

CO Series

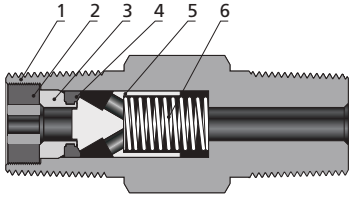

Component		Material Grade/ASTM Specification	
		316 SS	Brass
1	Body	316 SS/A479	Brass C36000/B16
2	Insert Locking Screw	316 SS/A479	Brass C36000/B16
3	Insert	316 SS/A479	Brass C36000/B16
4	O-ring	Fluorocarbon FKM	Buna N
5	Poppet	316 SS/A479	Brass C36000/B16
6	Spring	302 SS/A313	302 SS/A313

CA Series

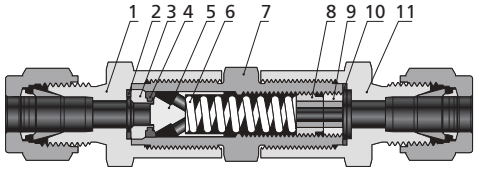

Component		Material Grade/ASTM Specification	
		316 SS	Brass
1	Inlet Body	316 SS/A479	Brass C36000/B16
2	Inlet Gasket	PTFE-coated 316 SS/A479	PTFE-coated 316 SS/A479
3	Insert	316 SS/A479	Brass C36000/B16
4	O-ring	Fluorocarbon FKM	Buna N
5	Poppet	316 SS/A479	Brass C36000/B16
6	Spring	302 SS/A313	302 SS/A313
7	Center Body	316 SS/A479	Brass C36000/B16
8	Adjusting Screw	316 SS/A479	316 SS/A479
9	Locking Screw	316 SS/A479	316 SS/A479
10	Outlet Gasket	PTFE-coated 316 SS/A479	PTFE-coated 316 SS/A479
11	Outlet Body	316 SS/A479	Brass C36000/B16

COA Series

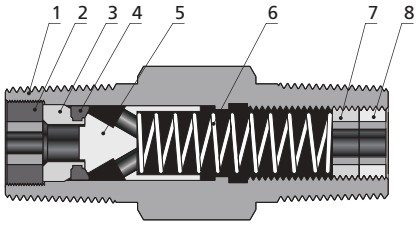

Component		Material Grade/ASTM Specification	
		316 SS	Brass
1	Body	316 SS/A479	Brass C36000/B16
2	Insert Locking Screw	316 SS/A479	Brass C36000/B16
3	Insert	316 SS/A479	Brass C36000/B16
4	O-ring	Fluorocarbon FKM	Buna N
5	Poppet	316 SS/A479	Brass C36000/B16
6	Spring	302 SS/A313	302 SS/A313
7	Adjusting Screw	316 SS/A479	316 SS/A479
8	Locking Screw	316 SS/A479	316 SS/A479

CL Series

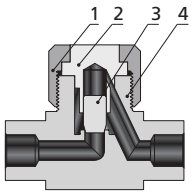

Component		Material Grade/ASTM Specification
1	Bonnet Nut	316 SS/A479
2	Bonnet	316 SS/A479
3	Poppet	S17400/A564
4	Body	316 SS/A479

Dimensions

CV Series

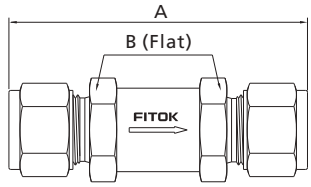

Basic Ordering Number	Connection Type and Size		Cv	Dimensions, in. (mm)	
	Inlet	Outlet		A	B
CV□□-FL2-	1/8" FITOK	1/8" FITOK	0.10	2.14 (54.3)	5/8 (15.9)
CV□□-FL4-	1/4" FITOK	1/4" FITOK	0.47	2.35 (59.7)	
CV□□-FL6-	3/8" FITOK	3/8" FITOK	1.47	3.17 (80.5)	7/8 (22.2)
CV□□-FL8-	1/2" FITOK	1/2" FITOK	1.68	3.42 (86.9)	
CV□□-FL12-	3/4" FITOK	3/4" FITOK	4.48	4.32 (110.0)	1 1/4 (31.8)
CV□□-FL16-	1" FITOK	1" FITOK		4.74 (120.0)	1 3/8 (34.9)
CV□□-ML6-	6 mm FITOK	6 mm FITOK	0.47	2.36 (59.9)	5/8 (15.9)
CV□□-ML10-	10 mm FITOK	10 mm FITOK	1.68	3.32 (84.3)	7/8 (22.2)
CV□□-ML12-	12 mm FITOK	12 mm FITOK		3.42 (86.9)	
CV□□-FNS2-	1/8 Female NPT	1/8 Female NPT	0.10	1.89 (48.0)	5/8 (15.9)
CV□□-FNS4-	1/4 Female NPT	1/4 Female NPT	0.47	2.15 (54.6)	3/4 (19.1)
CV□□-FNS6-	3/8 Female NPT	3/8 Female NPT	1.47	2.98 (75.7)	7/8 (22.2)
CV□□-FNS8-	1/2 Female NPT	1/2 Female NPT	1.68	3.58 (90.9)	1 1/16 (27.0)
CV□□-FNS12-	3/4 Female NPT	3/4 Female NPT	4.48	4.08 (104.0)	1 1/4 (31.8)
CV□□-FNS16-	1 Female NPT	1 Female NPT		4.84 (123.0)	1 5/8 (41.3)
CV□□-NS2-	1/8 Male NPT	1/8 Male NPT	0.10	1.71 (43.4)	5/8 (15.9)
CV□□-NS4-	1/4 Male NPT	1/4 Male NPT	0.47	2.09 (53.1)	
CV□□-NS6-	3/8 Male NPT	3/8 Male NPT	1.47	2.78 (70.6)	7/8 (22.2)
CV□□-NS8-	1/2 Male NPT	1/2 Male NPT	1.68	3.16 (80.3)	
CV□□-NS12-	3/4 Male NPT	3/4 Male NPT	4.48	4.08 (104.0)	1 1/4 (31.8)
CV□□-NS16-	1 Male NPT	1 Male NPT		4.52 (115.0)	1 5/8 (41.3)
CV□□-FR4-	1/4" Male FR	1/4" Male FR	0.47	2.21 (56.2)	5/8 (15.9)
CV□□-FR8-	1/2" Male FR	1/2" Male FR	1.68	3.56 (90.4)	15/16 (23.8)
CV□□-FR12-	3/4" Male FR	3/4" Male FR	4.48	4.64 (118.0)	1 5/8 (41.3)
CV□□-FR16-	1" Male FR	1" Male FR		4.76 (121.0)	

Ordering Number Description

CVSS – FL8 – ML10 – B – 2SF2

Series	Body Material	Inlet Type	Inlet Size	Outlet Type	Outlet Size	Seal Material	Nominal Cracking Pressure	Special Application	Cleaning and Packaging
CV	SS 316 SS 6L 316L SS B Brass M Alloy 400	FNS Female NPT NS Male NPT FRT Female BSPT RT Male BSPT FMS Female Metric Thread (for RG-M) MS Male Metric Thread (for RG-M) FRP Female BSPP (for RP) BP Male BSPP (for RG) FL Fractional Tube Fitting ML Metric Tube Fitting FO Male FO Fitting FR Male FR Fitting UMB Rotatable Metric Tube Butt Weld UFB Rotatable Fractional Tube Butt Weld	2 1/8" 4 1/4" 6 3/8" or 6 mm 8 1/2" or 8 mm 10 10 mm 12 3/4" or 12 mm 16 1"	Same as Inlet Specified in the same way as the inlet type and size		Fluorocarbon FKM B Buna N E EPDM N Neoprene Z FFKM	3 psig 1 1/3 psig 2 1 psig 3 10 psig 4 25 psig	No S NACE MR0175	FC-01 F2 FC-02

1. Standard thread pitch for metric threads are as follows:
   M10 and below: 1 mm
   M12 to M24: 1.5 mm
   M27 and above: 2 mm
   Standard thread pitch should be omitted in the ordering number, others should be specified.
2. For oxygen-enriched environment or hazardous media service, please contact FITOK Group or our authorized distributors.
3. Cleaning and Packaging:
   FC-01: Standard cleaning and packaging for general industrial procedures.
   FC-02: Special cleaning and packaging for wetted system components to ensure compliance with product cleanliness requirement of ASTM G93 Level C.
4. The materials, connection types and sizes listed in the "Ordering Number Description" are standard. For other materials and end connections, please contact FITOK Group or our authorized distributors.
5. PTFE-coated gasket can be chosen to reduce the possibility of O-ring's moving in system caused by the pressure fluctuations, vibration or pulsating. For more details, please contact FITOK Group or our authorized distributors.
6. Check valve is designed with unidirectional flow path, it can't be used as safety relief valve.
7. If the check valve is not opened for a period of time, its initial cracking pressure may be higher than set cracking pressure.

CH Series

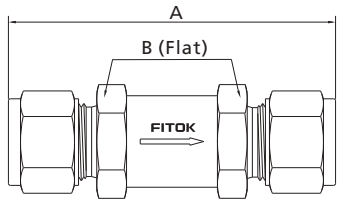

Basic Ordering Number	Connection Type and Size		Pressure Rating at 100° F (37° C) bar (psig)	Cv	Dimensions, in. (mm)	
	Inlet	Outlet			A	B
CH□□-FL2-	1/8" FITOK	1/8" FITOK	414 (6000)	0.67	2.27 (57.7)	11/16 (17.5)
CH□□-FL4-	1/4" FITOK	1/4" FITOK			2.43 (61.7)	
CH□□-FL6-	3/8" FITOK	3/8" FITOK		1.8	2.75 (69.9)	1 (25.4)
CH□□-FL8-	1/2" FITOK	1/2" FITOK			2.96 (75.2)	
CH□□-FL12-	3/4" FITOK	3/4" FITOK	344 (5000)	4.7	3.52 (89.4)	1 5/8 (41.3)
CH□□-FL16-	1" FITOK	1" FITOK	323 (4700)		4.11 (104.5)	
CH□□-ML6-	6 mm FITOK	6 mm FITOK	414 (6000)	0.67	2.43 (61.7)	11/16 (17.5)
CH□□-ML8-	8 mm FITOK	8 mm FITOK		1.8	2.70 (68.6)	
CH□□-ML10-	10 mm FITOK	10 mm FITOK			2.80 (71.1)	1 (25.4)
CH□□-ML12-	12 mm FITOK	12 mm FITOK			2.96 (75.2)	
CH□□-ML22-	22 mm FITOK	22 mm FITOK	337 (4900)	4.7	3.48 (88.4)	1 5/8 (41.3)
CH□□-ML25-	25 mm FITOK	25 mm FITOK	316 (4600)		3.88 (98.6)	
CH□□-FNS4-	1/4 Female NPT	1/4 Female NPT	414 (6000)	0.67	2.13 (54.1)	11/16 (17.5)
CH□□-FNS6-	3/8 Female NPT	3/8 Female NPT	365 (5300)	1.8	2.55 (64.8)	1(25.4)
CH□□-FNS8-	1/2 Female NPT	1/2 Female NPT	337 (4900)		3.03 (77.0)	1 1/16 (27.0)
CH□□-FNS12-	3/4 Female NPT	3/4 Female NPT	316 (4600)	4.7	3.23 (82.0)	1 5/8 (41.3)
CH□□-FNS16-	1 Female NPT	1 Female NPT	303 (4400)		3.83 (97.3)	
CH□□-NS2-	1/8 Male NPT	1/8 Male NPT	414 (6000)	0.67	1.79 (45.4)	11/16 (17.5)
CH□□-NS4-	1/4 Male NPT	1/4 Male NPT			2.17 (55.1)	
CH□□-NS6-	3/8 Male NPT	3/8 Male NPT		1.8	2.36 (59.9)	1 (25.4)
CH□□-NS8-	1/2 Male NPT	1/2 Male NPT			2.73 (69.3)	
CH□□-NS12-	3/4 Male NPT	3/4 Male NPT	344 (5000)	4.7	3.29 (83.6)	1 5/8 (41.3)
CH□□-NS16-	1 Male NPT	1 Male NPT			3.67 (93.2)	
CH□□-FRT4-	1/4 Female BSPT	1/4 Female BSPT	414 (6000)	0.67	2.28 (57.9)	11/16 (17.5)
CH□□-FRT8-	1/2 Female BSPT	1/2 Female BSPT	351 (5100)	1.8	3.29 (83.6)	1 1/16 (27.0)
CH□□-FRT12-	3/4 Female BSPT	3/4 Female BSPT	330 (4800)	4.7	3.55 (90.2)	1 5/8 (41.3)
CH□□-FRT16-	1 Female BSPT	1 Female BSPT	303 (4400)		3.83 (97.3)	
CH□□-RT4-	1/4 Male BSPT	1/4 Male BSPT	414 (6000)	0.67	2.17 (55.1)	11/16 (17.5)
CH□□-RT8-	1/2 Male BSPT	1/2 Male BSPT		1.8	2.73 (69.3)	1 (25.4)
CH□□-RT12-	3/4 Male BSPT	3/4 Male BSPT	344 (5000)	4.7	3.35 (85.1)	1 5/8 (41.3)
CH□□-RT16-	1 Male BSPT	1 Male BSPT			3.67 (93.2)	
CH□□-FR4-	1/4" Male FR	1/4" Male FR	414 (6000)	0.67	2.28 (57.9)	11/16 (17.5)
CH□□-FR8-	1/2" Male FR	1/2" Male FR	296 (4300)	1.8	2.73 (69.3)	1 (25.4)
CH□□-FR12-	3/4" Male FR	3/4" Male FR	254 (3700)	4.7	3.78 (96.0)	1 5/8 (41.3)
CH□□-FO4-	1/4" Male FO	1/4" Male FO	414 (6000)	0.67	1.98 (50.3)	11/16 (17.5)
CH□□-FO8-	1/2" Male FO	1/2" Male FO		1.8	2.35 (59.7)	1 (25.4)
CH□□-FO12-	3/4" Male FO	3/4" Male FO	344 (5000)	4.7	2.90 (73.7)	1 5/8 (41.3)
CH□□-FO16-	1" Male FO	1" Male FO				

Ordering Number Description

CHSS – FL8 – ML10 – B – 2SF2

Series	Body Material	Inlet Type	Inlet Size	Outlet Type	Outlet Size	Seal Material	Nominal Cracking Pressure	Special Application	Cleaning and Packaging
CH	SS 316 SS 6L 316L SS M Alloy 400	FNS Female NPT NS Male NPT FRT Female BSPT RT Male BSPT FMS Female Metric Thread (for RG-M) MS Male Metric Thread (for RG-M) FRP Female BSPP (for RP) BP Male BSPP (for RG) FL Fractional Tube Fitting ML Metric Tube Fitting FO Male FO Fitting FR Male FR Fitting UMB Rotatable Metric Tube Butt Weld UFB Rotatable Fractional Tube Butt Weld	2 1/8" 4 1/4" 6 3/8" or 6 mm 8 1/2" or 8 mm 10 10 mm 12 3/4" or 12 mm 16 1" 22 22 mm or M22 x 1.5 25 25 mm	Same as Inlet Specified in the same way as the inlet type and size	Same as Inlet Specified in the same way as the inlet type and size	Fluorocarbon FKM B Buna N E EPDM N Neoprene Z FFKM	3 psig 1 1/3 psig 2 1 psig 3 10 psig 4 25 psig	No S NACE MR0175 R110 ECE R110	FC-01 F2 FC-02

1. Standard thread pitch for metric threads are as follows:
   M10 and below: 1 mm
   M12 to M24: 1.5 mm
   M27 and above: 2 mm
   Standard thread pitch should be omitted in the ordering number, others should be specified.
2. For oxygen-enriched environment or hazardous media service, please contact FITOK Group or our authorized distributors.
3. Cleaning and Packaging:
   FC-01: Standard cleaning and packaging for general industrial procedures.
   FC-02: Special cleaning and packaging for wetted system components to ensure compliance with product cleanliness requirement of ASTM G93 Level C.
4. The materials, connection types and sizes listed in the "Ordering Number Description" are standard. For other materials and end connections, please contact FITOK Group or our authorized distributors.
5. Check valve is designed with unidirectional flow path, it can't be used as safety relief valve.
6. If the check valve is not opened for a period of time, its initial cracking pressure may be higher than set cracking pressure.

CO Series

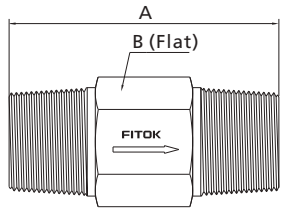

Basic Ordering Number	Connection Type and Size		Cv	Dimensions, in. (mm)	
	Inlet	Outlet		A	B
CO□□-FNS4-	1/4 Female NPT	1/4 Female NPT	0.35	2.41 (61.2)	3/4 (19.1)
CO□□-FNS8-	1/2 Female NPT	1/2 Female NPT	1.20	3.71 (94.2)	1 1/16 (27.0)
CO□□-NS4-	1/4 Male NPT	1/4 Male NPT	0.35	1.62 (41.1)	9/16 (14.3)
CO□□-NS8-	1/2 Male NPT	1/2 Male NPT	1.20	2.28 (57.9)	7/8 (22.2)
CO□□-FRT4-	1/4 Female BSPT	1/4 Female BSPT	0.35	2.54 (64.5)	3/4 (19.1)
CO□□-RT4-	1/4 Male BSPT	1/4 Male BSPT		1.62 (41.1)	9/16 (14.3)

Ordering Number Description

COSS – FNS8 – NS8 – B – 2SF2

Series	Body Material	Inlet Type	Inlet Size	Outlet Type	Outlet Size	Seal Material	Nominal Cracking Pressure	Special Application	Cleaning and Packaging
CO	SS 316 SS 6L 316L SS B Brass M Alloy 400	FNS Female NPT NS Male NPT FRT Female BSPT RT Male BSPT	2 1/8" 4 1/4" 6 3/8" 8 1/2"	Same as Inlet Specified in the same way as the inlet type and size		Fluorocarbon FKM B Buna N E EPDM N Neoprene Z FFKM	3 psig 1 1/3 psig 2 1 psig 3 10 psig 4 25 psig	No S NACE MR0175	FC-01 F2 FC-02

1. For oxygen-enriched environment or hazardous media service, please contact FITOK Group or our authorized distributors.
2. Cleaning and Packaging:
   FC-01: Standard cleaning and packaging for general industrial procedures.
   FC-02: Special cleaning and packaging for wetted system components to ensure compliance with product cleanliness requirement of ASTM G93 Level C.
3. The materials, connection types and sizes listed in the "Ordering Number Description" are standard. For other materials and end connections, please contact FITOK Group or our authorized distributors.
4. Check valve is designed with unidirectional flow path, it can't be used as safety relief valve.
5. If the check valve is not opened for a period of time, its initial cracking pressure may be higher than set cracking pressure.

CA Series

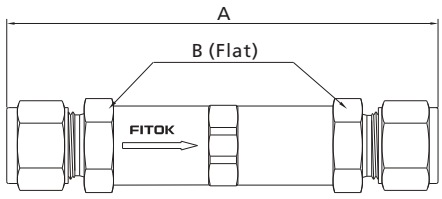

Basic Ordering Number	Connection Type and Size		Cv	Dimensions, in. (mm)	
	Inlet	Outlet		A	B
CA□□-FL4-	1/4" FITOK	1/4" FITOK	0.37	3.23 (82.0)	5/8 (15.9)
CA□□-ML6-	6 mm FITOK	6 mm FITOK			
CA□□-ML8-	8 mm FITOK	8 mm FITOK		3.32 (84.3)	
CA□□-FR4-	1/4" Male FR	1/4" Male FR		3.09 (78.5)	

Ordering Number Description

CASS – FL8 – ML10 – B – 5SF2 – T

Series	Body Material	Inlet Type	Inlet Size	Outlet Type	Outlet Size	Seal Material	Cracking Pressure	Special Application	Cleaning and Packaging	Specified Cracking Pressure
CA	SS 316 SS 6L 316L SS B Brass M Alloy 400	FL Fractional Tube Fitting ML Metric Tube Fitting FR Male FR Fitting	4 1/4" 6 6 mm 8 8 mm	Same as Inlet Specified in the same way as the inlet type and size		(blank) Fluorocarbon FKM B Buna N E EPDM N Neoprene Z FFKM	(blank) 3 to 50 psig 5 50 to 150 psig 6 150 to 350 psig 7 350 to 600 psig	(blank) No S NACE MR0175	(blank) FC-01 F2 FC-02	(blank) None T Valves are set and tested as per the specified cracking pressure

1. For oxygen-enriched environment or hazardous media service, please contact FITOK Group or our authorized distributors.
2. Cleaning and Packaging:
   FC-01: Standard cleaning and packaging for general industrial procedures.
   FC-02: Special cleaning and packaging for wetted system components to ensure compliance with product cleanliness requirement of ASTM G93 Level C.
3. The materials, connection types and sizes listed in the "Ordering Number Description" are standard. For other materials and end connections, please contact FITOK Group or our authorized distributors.
4. Check valve is designed with unidirectional flow path, it can't be used as safety relief valve.
5. If the check valve is not opened for a period of time, its initial cracking pressure may be higher than set cracking pressure.
6. For the specified cracking pressure of check valve, please indicate its value to be set when ordering.

COA Series

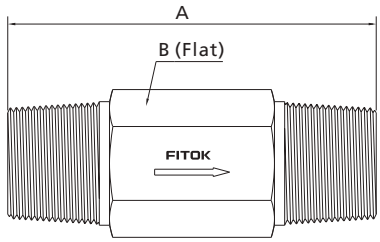

Basic Ordering Number	Connection Type and Size		Cv	Dimensions, in. (mm)	
	Inlet	Outlet		A	B
COA ☐☐-FNS4-	1/4 Female NPT	1/4 Female NPT	0.35	2.98 (75.7)	3/4 (19.1)
COA ☐☐-NS4-	1/4 Male NPT	1/4 Male NPT	0.35	1.62 (41.1)	9/16 (14.3)
COA ☐☐-NS8-	1/2 Male NPT	1/2 Male NPT	1.20	2.56 (65.0)	7/8 (22.2)
COA ☐☐-RT4-	1/4 Male BSPT	1/4 Male BSPT	0.35	1.62 (41.1)	9/16 (14.3)
COA ☐☐-RT8-	1/2 Male BSPT	1/2 Male BSPT	1.20	2.56 (65.0)	7/8 (22.2)

Ordering Number Description

COASS – FNS8 – FNS4 – B – 5SF2 – T

Series	Body Material	Inlet Type	Inlet Size	Outlet Type	Outlet Size	Seal Material	Cracking Pressure	Special Application	Cleaning and Packaging	Specified Cracking Pressure
COA	SS 316 SS 6L 316L SS B Brass M Alloy 400	FNS Female NPT NS Male NPT RT Male BSPT	4 1/4" 8 1/2"	Same as Inlet Specified in the same way as the inlet type and size		Fluorocarbon FKM B Buna N E EPDM N Neoprene Z FFKM	3 to 50 psig 5 50 to 150 psig 6 150 to 350 psig 7 350 to 600 psig	No S NACE MR0175	FC-01 F2 FC-02	None T Valves are set and tested as per the specified cracking pressure

1. For oxygen-enriched environment or hazardous media service, please contact FITOK Group or our authorized distributors.
2. Cleaning and Packaging:
   FC-01: Standard cleaning and packaging for general industrial procedures.
   FC-02: Special cleaning and packaging for wetted system components to ensure compliance with product cleanliness requirement of ASTM G93 Level C.
3. The materials, connection types and sizes listed in the "Ordering Number Description" are standard. For other materials and end connections, please contact FITOK Group or our authorized distributors.
4. Check valve is designed with unidirectional flow path, it can't be used as safety relief valve.
5. If the check valve is not opened for a period of time, its initial cracking pressure may be higher than set cracking pressure.
6. For the specified cracking pressure of check valve, please indicate its value to be set when ordering.

CL Series

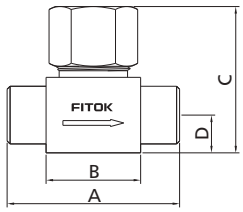

Basic Ordering Number	Connection Type and Size		Cv	Dimensions, in. (mm)			
	Inlet	Outlet		A	B	C	D
CL□□-FL4	1/4" FITOK	1/4" FITOK	0.30	2.40 (61.0)	1.01 (25.7)	1.47 (37.3)	0.39 (9.9)
CL□□-FL6	3/8" FITOK	3/8" FITOK	0.64	2.83 (71.9)	1.31 (33.3)	1.85 (47.0)	0.50 (12.7)
CL□□-FL8	1/2" FITOK	1/2" FITOK	2.20	3.92 (99.6)	2.19 (55.6)	2.44 (62.0)	0.62 (15.7)
CL□□-FL12	3/4" FITOK	3/4" FITOK					
CL□□-ML6	6 mm FITOK	6 mm FITOK	0.30	2.40 (61.0)	1.01 (25.7)	1.47 (37.3)	0.39 (9.9)
CL□□-FNS2	1/8 Female NPT	1/8 Female NPT		2.00 (50.8)	1.00 (25.4)	1.47 (37.3)	0.39 (9.9)
CL□□-FNS4	1/4 Female NPT	1/4 Female NPT	0.64	2.25 (57.2)	1.25 (31.8)	1.85 (47.0)	0.50 (12.7)
CL□□-FNS6	3/8 Female NPT	3/8 Female NPT	2.20	3.12 (79.2)	1.86 (47.2)	2.44 (62.0)	0.62 (15.7)
CL□□-FNS8	1/2 Female NPT	1/2 Female NPT					
CL□□-TS4	1/4" TS	1/4" TS	0.30	1.81 (46.0)	0.90 (22.9)	1.47 (37.3)	0.39 (9.9)
CL□□-TS6	3/8" TS	3/8" TS	0.64	2.25 (57.2)	1.25 (31.8)	1.85 (47.0)	0.50 (12.7)
CL□□-TS8	1/2" TS	1/2" TS	2.20	3.13 (79.5)	1.88 (47.8)	2.44 (47.0)	0.62 (15.7)
CL□□-PB4	1/4×SCH80 PB	1/4×SCH80 PB	0.30	1.81 (46.0)	0.90 (22.9)	1.47 (37.3)	0.39 (9.9)
CL□□-PB6	3/8×SCH80 PB	3/8×SCH80 PB	0.64	2.25 (57.2)	1.25 (31.8)	1.85 (47.0)	0.50 (12.7)
CL□□-PB8	1/2×SCH80 PB	1/2×SCH80 PB	2.20	3.13 (79.5)	1.88 (47.8)	2.44 (62.0)	0.62 (15.7)

Ordering Number Description

CLSS – FL8 – ML10 – SF2

Series	Body Material	Inlet Type	Inlet Size	Outlet Type	Outlet Size	Special Application	Cleaning and Packaging

Series	
CL	

Body Material	
SS	316 SS

Inlet Type	
FNS	Female NPT
NS	Male NPT
FRT	Female BSPT
RT	Male BSPT
FMS	Female Metric Thread (for RG-M)
MS	Male Metric Thread (for RG-M)
FRP	Female BSPP (for RP)
BP	Male BSPP (for RG)
TS	Fractional Tube Socket Weld
MTS	Metric Tube Socket Weld
TB	Fractional Tube Butt Weld
MTB	Metric Tube Butt Weld
PS	Pipe Socket Weld
PB	Pipe Butt Weld
FL	Fractional Tube Fitting
ML	Metric Tube Fitting
UFB	Rotatable Fractional Tube Butt Weld
UMB	Rotatable Metric Tube Butt Weld
FO	Male FO Fitting
FR	Male FR Fitting

Inlet Size	
2	1/8"
4	1/4" or 1/4×SCH80
6	3/8" or 6 mm or 3/8×SCH80
8	1/2" or 1/2×SCH80
12	3/4"

Outlet Type / Outlet Size	
	Same as Inlet
Specified in the same way as the inlet type and size	

Special Application	
	No
S	NACE MR0175

Cleaning and Packaging	
	FC-01
F2	FC-02

1. Standard thread pitch for metric threads are as follows:
   M10 and below: 1 mm
   M12 to M24: 1.5 mm
   M27 and above: 2 mm
   Standard thread pitch should be omitted in the ordering number, others should be specified.
2. For oxygen-enriched environment or hazardous media service, please contact FITOK Group or our authorized distributors.
3. Cleaning and Packaging:
   FC-01: Standard cleaning and packaging for general industrial procedures.
   FC-02: Special cleaning and packaging for wetted system components to ensure compliance with product cleanliness requirement of ASTM G93 Level C.
4. The materials, connection types and sizes listed in the "Ordering Number Description" are standard. For other materials and end connections, please contact FITOK Group or our authorized distributors.

Proportional Relief Valves

RV, RL and RM Series







Proportional Relief Valves

RV, RL and RM Series

Introduction

FITOK proportional relief valves release the pressure in pipelines by diverting the flow of media as a way to protect the pipeline components. The valves open in proportion as the upstream pressure increases above the set pressure and close gradually as the upstream pressure decreases.



Features

- Set pressure:
  RV series: 7 color-coded springs available for a wide range of set pressures, 50 to 6000 psig @ 70°F (3.4 to 414 bar @ 20°C)
  RL series: 10 to 225 psig @ 70°F (0.7 to 15.5 bar @ 20°C)
  RM series: 3 color-coded springs available for a wide range of set pressures, 50 to 1500 psig @ 70°F (3.4 to 103 bar @ 20°C)
- Maximum outlet pressure:
  RV series: 1500 psig (103 bar)
  RL series: 225 psig (15.5 bar)
  RM series: 1500 psig (103 bar)
- Orifice size:
  RV series: 0.14" (3.6 mm)
  RL series: 0.19" (4.8 mm) and 0.25" (6.4 mm)
  RM series: 0.25" (6.4 mm)
- Back pressure
  Back pressure is the pressure of the outlet of valves. It increases the set pressure of proportional relief valves.
  RV and RM series: Balanced stem design to eliminate the effect of system back pressure
  RL series: Pre-set pressure = Desired pressure - 0.8 × Back pressure
- Working temperature: -40°F to 300°F (-40°C to 148°C)
- Variety of end connections
- Liquid or gas service
- Adjustable bonnet cap and adjustable set pressure
- Lead seal lock wire through lock wire holes to lock proportional relief valve so as to secure a set pressure effectively
- Variety of seal materials
- Label identifies the set pressure range

Applications

Relief valves are proportional relief valves that open gradually as the pressure increases. Consequently, they do not have a capacity rating at a given pressure rise (accumulation), and they are not certified to ASME or any other codes.

⚠ **Some system applications require relief valves to meet specific safety codes. The system designer and user must determine when such codes apply and whether these relief valves conform to them.**

⚠ **FITOK proportional relief valves should never be used as ASME Boiler and Pressure Vessel Code safety relief devices.**

⚠ **FITOK proportional relief valves are not "Safety Accessories" as defined in the Pressure Equipment Directive 2014/68/EU.**

Pressure-Temperature Rated Value

Series	RV					RM				RL				
Max. Inlet Pressure①	6000 psig (414 bar), up to 8000 psig (551 bar) during relief process					6000 psig (414 bar)				300 psig (20.6 bar)				
Max. Allowable① Outlet Pressure	1500 psig (103 bar)					1500 psig (103 bar)				225 psig (15.5 bar)				
Set Pressure	50 to 6000 psig (3.4 to 414 bar)					50 to 1500 psig (3.4 to 105 bar)				10 to 225 psig (0.7 to 15.5 bar)				
Sealing Material	FKM	Buna-N	Neop-rene	EPDM	FFKM	FKM	Buna-N	Neop-rene	EPDM	FKM	Buna-N	Neop-rene	EPDM	FFKM
Temperature, °C (°F)	Max. Set Pressure, psig (bar)													
-40 (-40)	–	6000 (414)	–	6000 (414)	–	–	1500 (103)	1500 (103)	1500 (103)	–	–	–	225 (15.5)	–
-34 (-30)												225 (15.5)		
-23 (-10)			6000 (414)							–	225 (15.5)			
-17 (0)					–	–								
-12 (10)						1500 (103)								
-4 (25)	6000 (414)				6000 (414)					225 (15.5)				225 (15.5)
-1 (30)														
4 (40)														
10 (50)														
20 (70)														
65 (150)	5580 (384)	5580 (384)	3000 (207)	5580 (384)	5580 (384)									
93 (200)	5160 (355)	5160 (355)	1500 (103)	5160 (355)	5160 (355)	700 (48)		700 (48)						
121 (250)	4910 (338)	4910 (338)	–	4910 (338)	4910 (338)									
135 (275)	–	–		–	2500 (172)			–	–					
148 (300)							–							

① Outlet pressure shall not exceed inlet pressure.

Set Pressure and Resealing Pressure

Set pressure: the upstream pressure at which the valve opens and the indication of flow occurs.
Set pressure of each valve after initial relief fluctuates within:
±3.0 psig (0.20 bar) or ±5% (whichever is greater) of the initial set pressure at 60 to 80°F (15 to 26°C),
±6.0 psig (0.40 bar) or ±20% (whichever is greater) of the initial set pressure below 60°F (15°C) or above 80°F (26°C).
Note: For valves not opened for a period of time, the set pressure may be higher.

Resealing pressure: the upstream pressure at which the valve is fully closed as a result of a drop of upstream pressure after the valve opens. Resealing pressure is always lower than set pressure.

The valve is tested for set and resealing performance before shipment.

Series	Test Set Pressure psig (bar)	Minimum Resealing Pressure as a Percentage of Set Pressure, %
RL	10 to 20 (0.7 to 1.3)	50
	175 to 225 (12.0 to 15.5)	91
RV/RM	100 to 200 (6.8 to 13.7)	50
	850 to 1000 (58.5 to 68.9)	85

Flow Data at 70°F (20°C)

Air

RV and RM Series

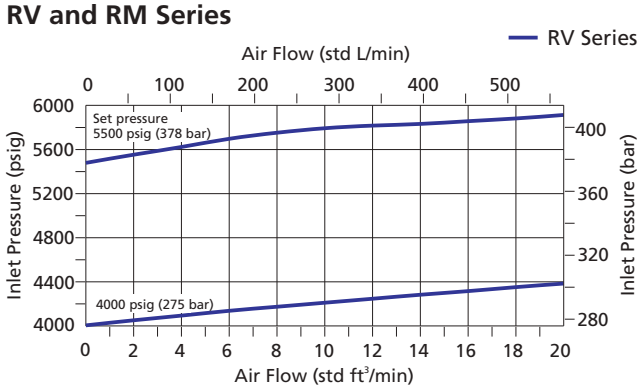

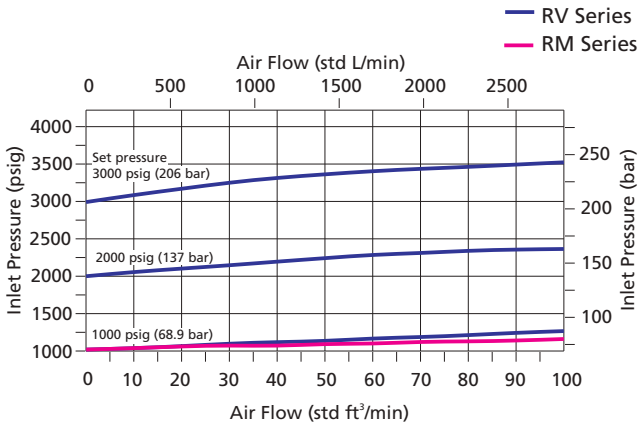

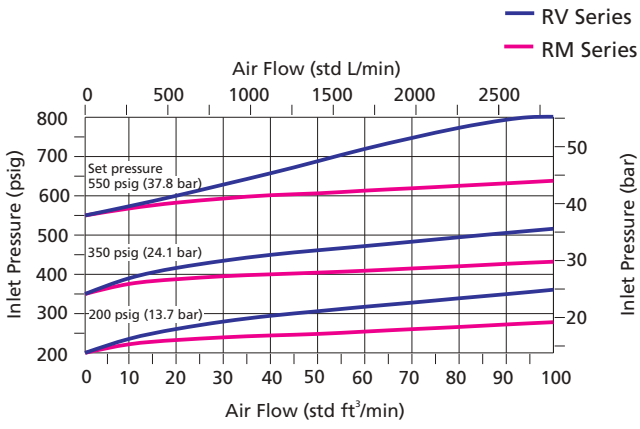

RL Series

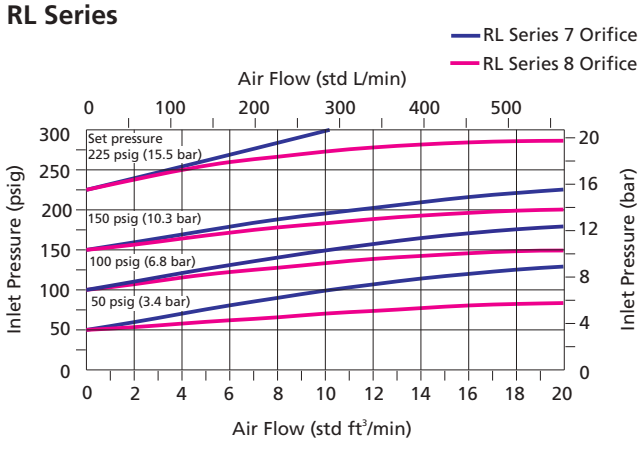

Water

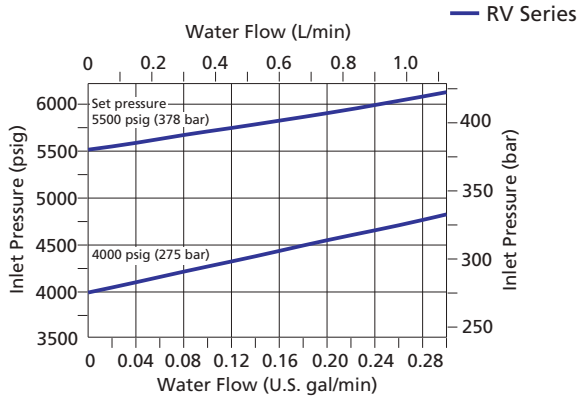

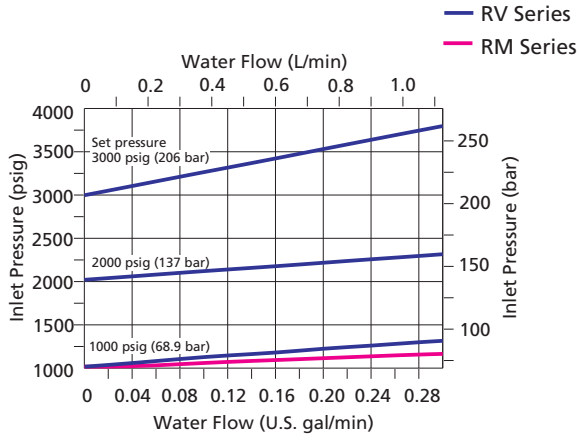

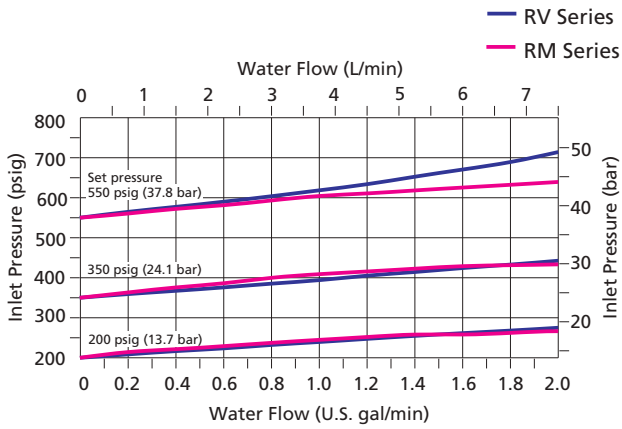

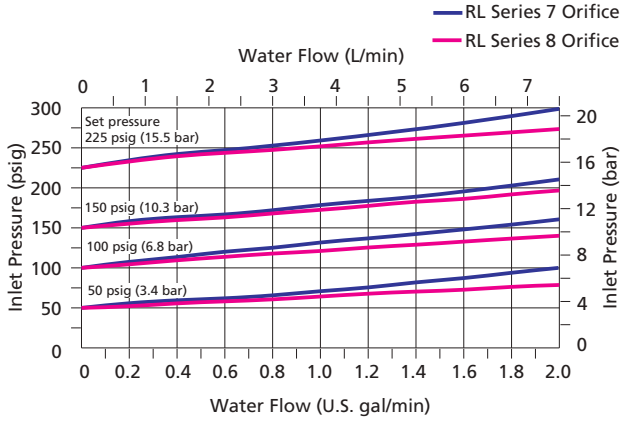

FITOK

Standard Materials of Construction

RV Series

Component		Material Grade/ASTM Specification
1	*Body*	*316 SS/A182*
2	*Seat*	*316 SS/A479*
3	*O-ring*	*Fluorocarbon FKM*
4	*Gasket*	*PEEK*
5	*Seat Retainer*	*316 SS/A479*
6	*O-ring*	*Fluorocarbon FKM*
7	*Stem*	*316 SS/A479*
8	*O-ring*	*Fluorocarbon FKM*
9	*Bonnet*	*316 SS/A479*
10	Spring Support	316 SS/A479
11	Spring	S17700 SS/AMS 5678
12	Lock Nut	17-4PH powdered metal
13	Label	Polyester
14	Bonnet Cap	316 SS/A479

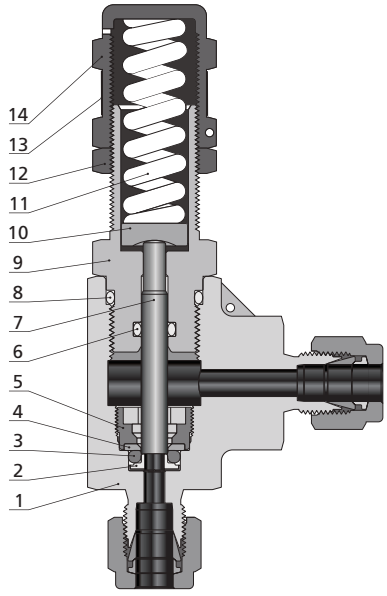

Note: Wetted components are listed in italics.
1. Lubricant: Silicone-based
2. Contact FITOK Group or our authorized distributors for other materials

RL Series

Component		Material Grade/ASTM Specification
1	*Body*	*316 SS/A182*
2	*Gasket*	*316 SS/A479*
3	*Seat*	*316 SS/A479*
4	*Bonded disc*	*316 SS/A479+Fluorocarbon FKM*
5	*Stem*	*316 SS/A479*
6	*Retainer*	*316 SS/A479*
6a	*Ring*	*316 SS/A479*
7	*Quad Seal*	*Fluorocarbon FKM*
8	*O-ring*	*Fluorocarbon FKM*
9	*Bonnet*	*316 SS/A479*
10	Spring Support	316 SS/A479
11	Spring	S17700 SS/AMS 5678
12	Lock Nut	17-4PH powdered metal
13	Sleeve	304SS/A240
14	Label	Polyester
15	Bonnet Cap	316 SS/A479

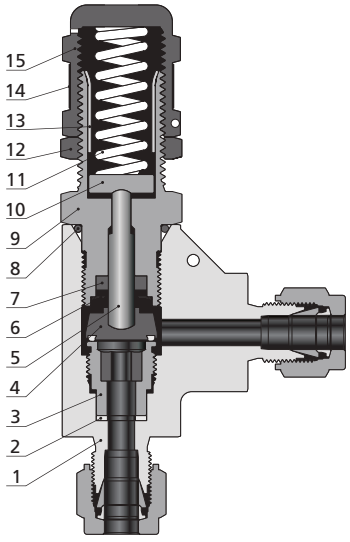

Orifice 7
0.19 in. (4.8 mm)

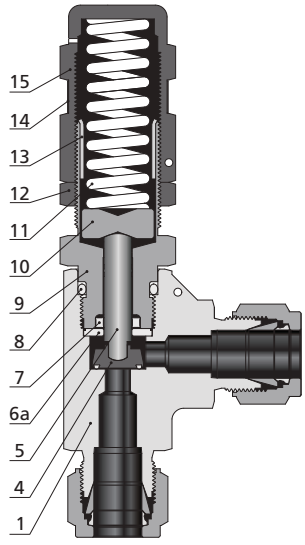

Orifice 8
0.25 in. (6.4 mm)

Note: Wetted components are listed in italics.
1. Lubricant: Silicone-based
2. Contact FITOK Group or our authorized distributors for other materials

RM Series

	Component	Material Grade/ASTM Specification
1	*Body*	*316 SS/A182*
2	*Stem*	*316 SS/A479+Fluorocarbon FKM*
3	*Retainer*	*316 SS/A479*
4	*Square sealing piece*	*Fluorocarbon FKM*
5	*Bonnet*	*316 SS/A479*
6	*O-ring*	*Fluorocarbon FKM*
7	Spring Support	316 SS/A479
8	Spring	S17700 SS/AMS 5678
9	Lock Nut	17-4PH powdered metal
10	Label	Polyester
11	Bonnet Cap	316 SS/A479

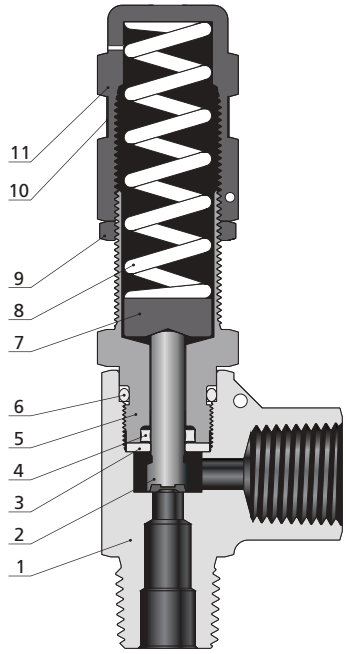

Note: Wetted components are listed in italics.
1. Lubricant: Silicone-based
2. Contact FITOK Group or our authorized distributors for other materials

Manual Override Handles

Lift the aluminum handle with hand to open the proportional relief valve without changing the set pressure.
For use on the following valves :

RV Series — set pressure range 50~1500 psig
RL Series — set pressure range 10~225 psig
RM Series— set pressure range 50~300 psig

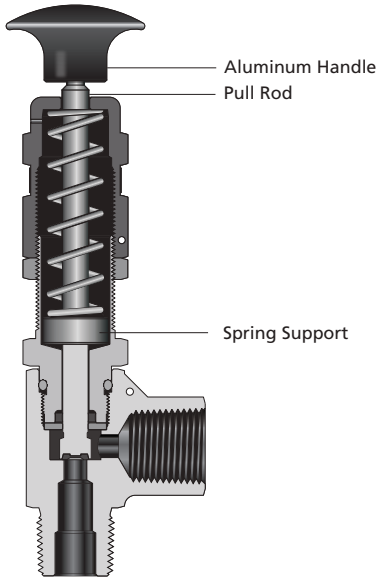

Dimensions

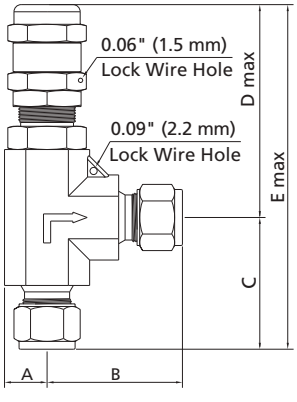

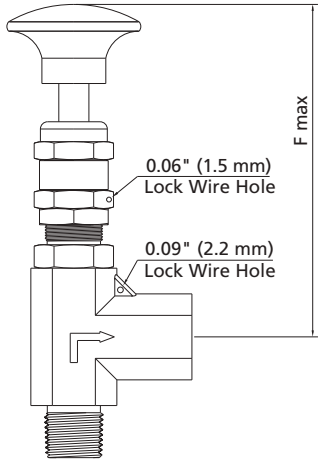

RV Series

Basic Ordering Number	Connection Type and Size		Orifice in. (mm)	Dimensions, in. (mm)					
	Inlet	Outlet		A	B	C	D	E	F
RV□□-FL4-6-□	1/4" FITOK	1/4" FITOK	0.14 (3.6)	0.46 (11.9)	1.60 (40.6)	1.44 (36.6)	2.70 (68.6)	4.14 (105.2)	3.68 (98.0)
RV□□-FL6-6-□	3/8" FITOK	3/8" FITOK							
RV□□-FL8-6-□	1/2" FITOK	1/2" FITOK		0.54 (13.7)	1.79 (45.4)	1.66 (42.2)	2.72 (69.0)	4.38 (111.2)	
RV□□-ML6-6-□	6 mm FITOK	6 mm FITOK		0.46 (11.9)	1.60 (40.6)	1.44 (36.6)	2.70 (68.6)	4.14 (105.2)	
RV□□-ML8-6-□	8 mm FITOK	8 mm FITOK							
RV□□-ML12-6-□	12 mm FITOK	12 mm FITOK		0.54 (13.7)	1.83 (46.5)	1.83 (46.5)	4.09 (103.9)	5.92 (150.4)	
RV□□-FNS4-6-□	1/4 Female NPT	1/4 Female NPT		0.46 (11.9)	1.17 (29.7)	1.38 (34.9)	2.70 (68.6)	4.08 (103.5)	
RV□□-NS4-6-□	1/4 Male NPT	1/4 Male NPT			1.17 (29.7)	1.27 (32.2)	2.70 (68.6)	3.96 (100.7)	
RV□□-FRT4-6-□	1/4 Female BSPT	1/4 Female BSPT			1.17 (29.7)	1.38 (34.9)	2.70 (68.6)	4.08 (103.5)	

RL Series

Basic Ordering Number	Connection Type and Size		Orifice in. (mm)	Dimensions, in. (mm)					
	Inlet Size	Outlet Size		A	B	C	D	E	F
RL□□-FL4-7	1/4" FITOK	1/4" FITOK	0.19 (4.8)	0.46 (11.9)	1.60 (40.6)	1.44 (36.6)	2.70 (68.8)	4.14 (105.0)	3.74 (95.0)
RL□□-ML6-7	6 mm FITOK	6 mm FITOK							
RL□□-NS4-7	1/4 Male NPT	1/4 Male NPT			1.17 (29.7)	1.38 (34.9)		4.08 (103.5)	
RL□□-RT4-7	1/4 Male BSPT	1/4 Male BSPT							
RL□□-FNS4-7	1/4 Female NPT	1/4 Female NPT							
RL□□-FRT4-7	1/4 Female BSPT	1/4 Female BSPT							
RL□□-FL8-8	1/2" FITOK	1/2" FITOK	0.25 (6.4)	0.54 (13.7)	1.83 (46.5)	1.83 (46.5)	3.87 (98.4)	5.92 (150.0)	4.89 (124.3)
RL□□-ML12-8	12 mm FITOK	12 mm FITOK							
RL□□-NS8-8	1/2 Male NPT	1/2 Male NPT			1.44 (36.6)	1.44 (36.6)		5.31 (135.0)	
RL□□-RT8-8	1/2 Male BSPT	1/2 Male BSPT							
RL□□-FNS8-8	1/2 Female NPT	1/2 Female NPT		0.58 (14.7)					
RL□□-FRT8-8	1/2 Female BSPT	1/2 Female BSPT							

RM Series

Basic Ordering Number	Connection Type and Size		Orifice in. (mm)	Dimensions, in. (mm)					
	Inlet Size	Outlet Size		A	B	C	D	E	F
RM□□-FL8-8-□	1/2" FITOK	1/2" FITOK	0.25 (6.4)	0.54 (13.7)	1.83 (46.5)	1.83 (46.5)	3.87 (98.4)	5.73 (145.0)	4.89 (124.3)
RM□□-ML12-8-□	12 mm FITOK	12 mm FITOK							
RM□□-NS8-8-□	1/2 Male NPT	1/2 Male NPT			1.44 (36.6)	1.44 (36.6)		5.31 (135.0)	
RM□□-RT8-8-□	1/2 Male BSPT	1/2 Male BSPT							
RM□□-FNS8-8-□	1/2 Female NPT	1/2 Female NPT		0.58 (14.7)					
RM□□-FRT8-8-□	1/2 Female BSPT	1/2 Female BSPT							

1. FITOK means FITOK double ferrule tube fittings.
2. Dimensions are shown with FITOK nuts finger-tightened. All dimensions are for reference only and are subject to change.
3. Sizes and types listed are standard. For other connection types and sizes, please contact FITOK Group or our authorized distributors.

Sealing Kit

Series	Orifice Desig-nator	Sealing Kit Basic Ordering Number					Sealing Kit Content
		FKM	Buna-N	Neoprene	EPDM	FFKM	
RV	6	VI-RV-6	BN-RV-6	N-RV-6	E-RV-6	Z-RV-6	O-ring (3)
RL	7	RLSS-7-VI	RLSS-7-B	RLSS-7-N	RLSS-7-E	RLSS-7-Z	O-ring, square sealing piece, adhesive disc, retainer
	8	RLSS-8-VI	RLSS-8-B	RLSS-8-N	RLSS-8-E	RLSS-8-Z	O-ring, square sealing piece, adhesive disc
RM	8	RMSS-8-VI	RMSS-8-B	RMSS-8-N	RMSS-8-E	–	O-ring, square sealing piece, stem

The basic ordering number of the listed RL and RM series sealing kits specifies 316 stainless steel.
For other materials, such as alloy 400, replace SS with M in the basic ordering number, for example: RLM-7-VI

Spring Kit

Series	Orifice Desig-nator	Spring Kit Basic Ordering Number	Set Pressure Range psig (bar)	Spring Color
RV	6	7PRV-SP6-F-B	50 to 300 (3.4 to 20.7)	Green
		7PRV-SP6-O-B	300 to 700 (20.7 to 48.3)	Orange
		7PRV-SP6-Y-B	700 to 1500 (48.3 to 103)	Yellow
		7PRV-SP6-P-B	1500 to 2500 (103 to 172)	Purple
		7PRV-SP6-W-B	2500 to 3500 (172 to 241)	White
		7PRV-SP6-J-B	3500 to 4500 (241 to 310)	Blue
		7PRV-SP6-C-B	4500 to 6000 (310 to 414)	Red
RL	7	7PRL-SP7-Y-B	10 to 225 (0.7 to 15.5)	Yellow
	8	7PRL-SP8-Y-B		
RM	8	7PRM-SP8-F-B	50 to 300 (3.4 to 20.7)	Green
		7PRM-SP8-O-B	300 to 700 (20.7 to 48.3)	Orange
		7PRM-SP8-Y-B	700 to 1500 (48.3 to 103)	Yellow

The content of the spring kit includes: spring and label.
To order spring kit with springs, labels, and lead seal lock wire, add "-L" to the spring kit basic ordering number.
For example: 7PRV-SP6-F-B-L.

Ordering Number Description

Valves

RVSS – FL6 – ML8 – 6Z – WM – TSF2

Series	Body Material	Inlet Type	Inlet Size	Outlet Type	Outlet Size	Orifice Size	Seal Material	Spring Kit Color	Handle	Set Pressure	Special Application	Cleaning and Packaging

Series

RV	
RM	
RL	

Body Material

SS	316 SS
S4	304 SS
S1	321 SS
6L	316L SS
4L	304L SS
904L	904L SS

Inlet Type

FNS	Female NPT
NS	Male NPT
FRT	Female BSPT
RT	Male BSPT
FMS	Female Metric Thread (for RG-M)
MS	Male Metric Thread (for RG-M)
FRP	Female BSPP (for RP)
BP	Male BSPP (for RG)
FL	Fractional Tube Fitting
ML	Metric Tube Fitting

Inlet Size

2	1/8"
4	1/4"
6	3/8" or 6 mm
8	1/2" or 8 mm
10	10 mm
12	3/4" or 12 mm

Outlet Type / Outlet Size

	Same as inlet
Specified in the same way as the inlet type and size	

Orifice Size

6	0.14" (3.6 mm) RV Only
7	0.19" (4.8 mm) RL Only
8	0.25" (6.4 mm) RL and RM

Seal Material

	Fluorocarbon FKM
B	Buna N
E	EPDM
N	Neoprene
Z	FFKM (RV and RL Series)

Spring Kit Color

	Yellow 10 ~ 225 psig (RL Only)
F	Green 50 ~ 300 psig (RV and RM)
O	Orange 300 ~ 700 psig (RV and RM)
Y	Yellow 700 ~ 1500 psig (RV and RM)
P	Purple 1500 ~ 2500 psig (RV Only)
W	White 2500 ~ 3500 psig (RV Only)
J	Blue 3500 ~ 4500 psig (RV Only)
C	Red 4500 ~ 6000 psig (RV Only)
N	No spring

Handle

	None
M	Black Aluminum Handle
MC	Red Aluminum Handle

Set Pressure

L	Set and test the valves with the minimum value of the spring pressure range. Lead seal lock wire as accessories.
T	Set, test and lock the valves with a specified set pressure. Hang a nameplate with the specified set pressure on it

Special Application

	No
S	NACE MR0175

Cleaning and Packaging

	FC-01
F2	FC-02

Note: "Ordering Number Description" is a reference to understand the combination rules of FITOK product part number. Not all combinations are available.

1. Standard thread pitch for metric threads are as follows:
   M10 and below: 1 mm
   M12 to M24: 1.5 mm
   M27 and above: 2 mm
   Standard thread pitch should be ignored in the ordering number, others should be specified.

2. Cleaning and Packaging:
   FC-01: Standard cleaning and packaging for general industrial procedures.
   FC-02: Special cleaning and packaging for wetted system components to ensure compliance with product cleaning requirement of ASTM G93 Level C.
3. For proportional relief valve with a specified set pressure and a nameplate, specify the desired set pressure when ordering.
   The set pressure value should be within the set pressure range of the selected spring, and the following requirements should be followed:
   10 psig≤set pressure value≤500 psig, take the minimum interval 1 psig.
   500 psig≤set pressure value≤1000 psig, take the minimum interval of 5 psig.
   1000 psig≤set pressure value≤6000 psig, take the minimum interval of 10 psig.

Bleed Valves, Purge Valves

Bleed Valves  B-180

Purge Valves  B-185

Bleed Valves

RB Series



Bleed Valves

RB Series

Introduction

Bleed valves can be used on instrument devices such as multi-valve manifolds or gauge valves to vent signal line pressure to atmosphere before removal of an instrument or to assist in calibration.

Features

- Compact design for easy installation
- Hardened stem and tip to extend cycle life
- Working pressure up to: 10000 psig (690 bar)
- Working temperature: -65°F to 850°F (-54°C to 454°C)
- Variety of end connections
- Leak-tight performance testing with nitrogen or compressed air for every valve at the rated pressure (not higher than 6000 psig) to meet the requirement of no visible leak



Pressure vs. Temperature

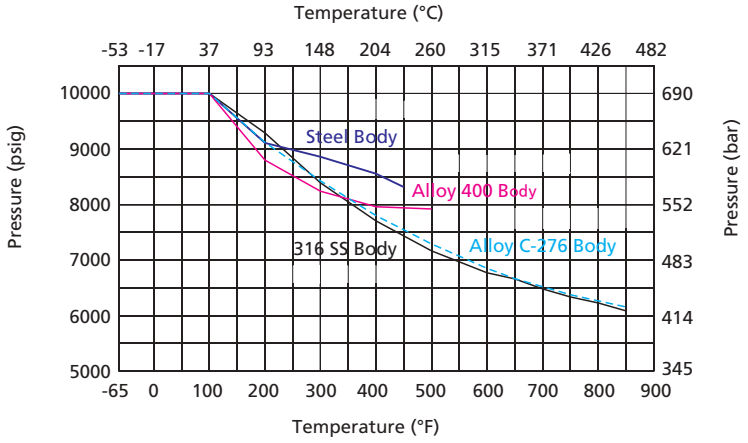

Note: Ratings based on all metal seals. Ratings limited to:

- -20°F (-28°C) min with steel.
- 450°F (232°C) max with SAE end connections using fluorocarbon FKM O-rings.
- 4500 psig (310 bar) max with SAE end connections.

Standard Materials of Construction

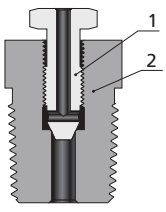

Type 1

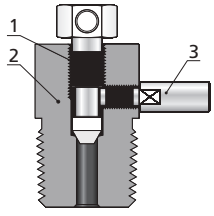

Type 2

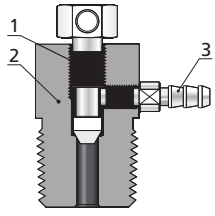

Type 3

Component		Valve Body Material Grade/ASTM Specification			
		316 SS	Carbon Steel	Alloy 400	Alloy C-276
1	*Stem*	*Hardened 316 SS/A479*		*Alloy 400/B164*	*C-276/B574*
2	*Body*	316 SS/A479	*1018/A108*		
3	*Vent tube*	316 SS/A479			

Note: Wetted components are listed in italics.

1. Lubricant: hydrocarbon carrier.
2. Contact FITOK Group or our authorized distributors for other materials.

Dimensions

Dimensions, in inches (millimeters),
are for reference only and are subject to change.

Type 1

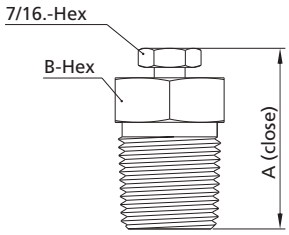

Type 2

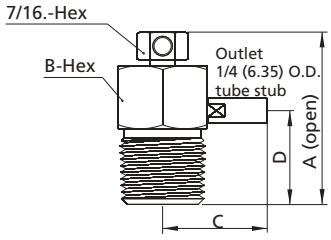

Type 3

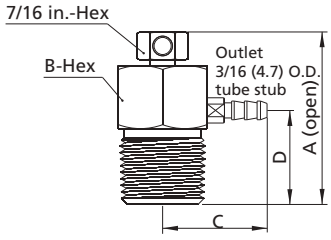

Type	Basic Ordering Number	Inlet Type and Size	Dimensions, in. (mm)			
			A	B	C	D
Type 1	RB□□-NS4	1/4 Male NPT	1.31 (33.4)	5/8 (15.9)	—	—
	RB□□-NS6	3/8 Male NPT	1.46 (37.1)	7/8 (22.2)		
	RB□□-NS8	1/2 Male NPT				
	RB□□-RT4	1/4 Male BSPT	1.31 (33.4)	5/8 (15.9)		
	RB□□-RT6	3/8 Male BSPT	1.46 (37.1)	7/8 (22.2)		
	RB□□-RT8	1/2 Male BSPT				
Type 2	RB□□-NS4-L	1/4 Male NPT	1.65 (41.8)	5/8 (15.9)	0.94 (24)	0.78 (19.7)
	RB□□-NS6-L	3/8 Male NPT	1.78 (45.1)	7/8 (22.2)	1.03 (26.2)	0.91 (23)
	RB□□-NS8-L	1/2 Male NPT			1.04 (26.3)	
	RB□□-RT4-L	1/4 Male BSPT	1.65 (41.8)	5/8 (15.9)	0.94 (24)	0.78 (19.7)
	RB□□-RT6-L	3/8 Male BSPT	1.78 (45.1)	7/8 (22.2)	1.03 (26.2)	0.91 (23)
	RB□□-RT8-L	1/2 Male BSPT			1.04 (26.3)	
Type 3	RB□□-NS4-C3	1/4 Male NPT	1.65 (41.8)	5/8 (15.9)	0.94 (24)	0.78 (19.7)
	RB□□-NS6-C3	3/8 Male NPT	1.78 (45.1)	7/8 (22.2)	1.03 (26.2)	0.91 (23)
	RB□□-NS8-C3	1/2 Male NPT			1.04 (26.3)	
	RB□□-RT4-C3	1/4 Male BSPT	1.65 (41.8)	5/8 (15.9)	0.94 (24)	0.78 (19.7)
	RB□□-RT6-C3	3/8 Male BSPT	1.78 (45.1)	7/8 (22.2)	1.03 (26.2)	0.91 (23)
	RB□□-RT8-C3	1/2 Male BSPT			1.04 (26.3)	

Sizes and types listed are standard. Other sizes and types are available upon request.

Caution

When installing a bleed valve, position the vent tube to direct system fluid away from operating personnel. Always open bleed valves slowly. These valves contain no packing, so some fluid weepage will occur when the valves are opened. Operating personnel must protect themselves from exposure to system fluids.

FITOK

Ordering Number Description

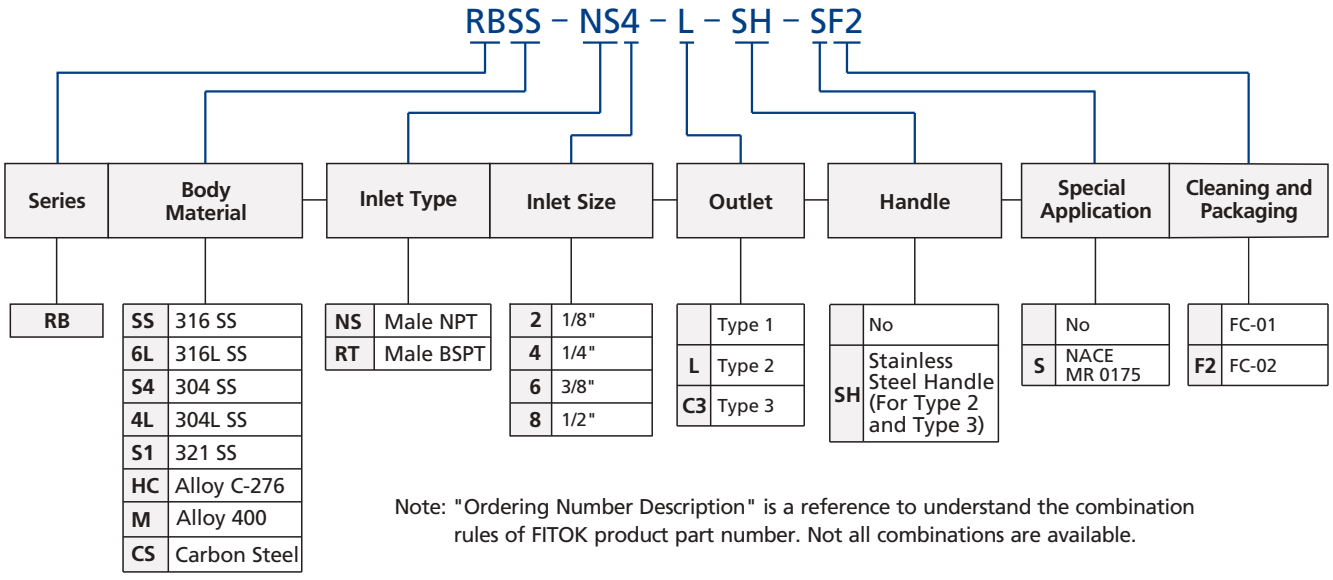

Note: "Ordering Number Description" is a reference to understand the combination rules of FITOK product part number. Not all combinations are available.

Cleaning and Packaging:
FC-01: Standard cleaning and packaging for general industrial procedures.
FC-02: Special cleaning and packaging for wetted system components to ensure compliance with product cleanliness requirement of ASTM G93 Level C.

Purge Valves

RP Series



Purge Valves

RP Series

Introduction

Purge valves are manual bleed, vent or drain valves. The knurled cap is permanently assembled to the valve body for safety. One-quarter turn with a wrench from finger-tight obtains leaktight closure during initial installation. Tightening with a wrench ensures closure to the rated pressure with subsequent installations.

Features

- Compact design for easy installation
- Bonnet crimped to valve body to prevent accidental disassembly
- Working pressure up to: 4000 psig (276 bar)
- Working temperature: -65°F to 600°F (-54°C to 315°C)
- Leak-tight performance testing with nitrogen or compressed air for every valve at the maximum working pressure to meet the requirement of no visible leak.



Pressure vs. Temperature

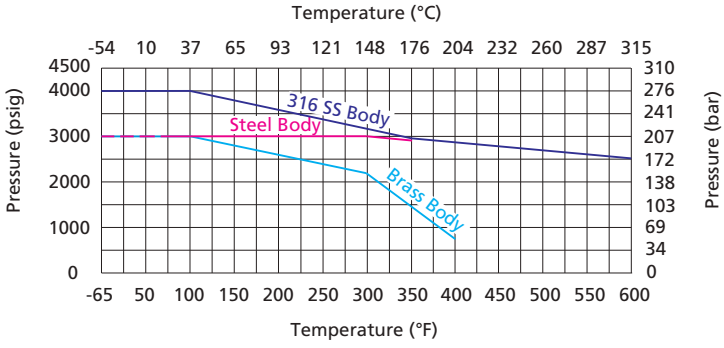

Note: Ratings based on all metal seals. Ratings limited to:
- -20°F (-28°C) min with steel.
- 450°F (232°C) max with SAE end connections using fluorocarbon FKM O-rings.

Standard Materials of Construction

Type L

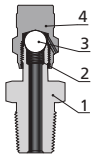

Type TL

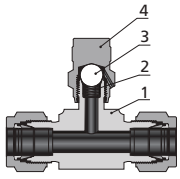

Type TA

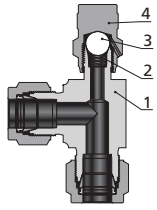

Type C

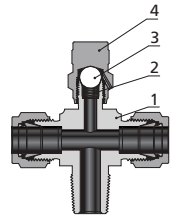

Component		Material Grade/ASTM Specification		
		316 SS	Brass	Carbon Steel
1	*Body*	*316 SS/A182* *316 SS/A479*	*Brass C36000/B16* *Brass C37700/B283*	*12L4/A108* *Chromium-plated*
2	*Spring*	*302 SS/A313*		
3	*Poppet (Ball)*	*316 SS/A479*		
4	*Cap*	*316 SS/A479*	*Brass C36000/B16*	*12L4/A108* *Chromium-plated*

Note: Wetted components are listed in italics.
1. Lubricant: molybdenum disulfide-based.
2. Contact FITOK Group or our authorized distributors for other materials.

Dimensions

Type L

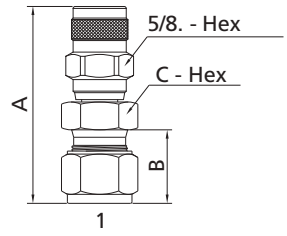

Type TL

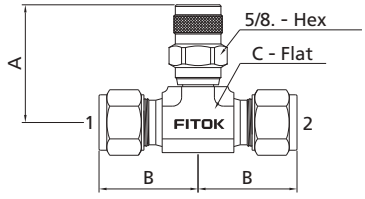

Type TA

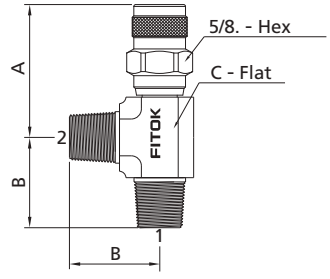

Type C

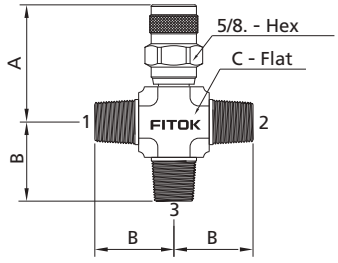

Caution:

When installing a purge valve, position the vent hole to direct system fluid away from operating personnel. The vent hole rotates with the cap, changing the direction of discharge as the cap is turned. Always open purge valves slowly. These valves contain no packing, so some fluid weepage will occur when the valves are opened. Operating personnel must protect themselves from exposure to system fluids.

Basic Ordering Number	Connection Type and Size		Dimensions, in. (mm)			
			Amax	B	C	D
RP□□-L	-FL4	1/4" FITOK	1.96 (49.8)	0.69 (17.5)	1/2 (12.7)	5/8 (15.9)
	-FL6	3/8" FITOK	2.05 (52.1)	0.75 (19.1)	5/8 (15.9)	
	-FL8	1/2" FITOK	2.20 (56.0)	0.88 (22.4)	13/16 (20.6)	
	-ML6	6 mm FITOK	1.96 (49.8)	0.69 (17.5)	0.55 (14.0)	
	-ML8	8 mm FITOK	2.02 (51.3)	0.73 (18.6)	0.59 (15.0)	
	-ML10	10 mm FITOK	2.10 (53.4)	0.77 (19.6)	0.71 (18.0)	
	-ML12	12 mm FITOK	2.20 (55.9)	0.87 (22.0)	0.87 (22.0)	
	-FNS4	1/4 Female NPT	1.76 (44.7)	0.72 (18.3)	3/4 (19.1)	
	-FNS6	3/8 Female NPT	1.83 (46.5)	0.78 (19.8)	7/8 (22.2)	
	-FNS8	1/2 Female NPT	2.02 (51.3)	0.97 (24.6)	1 1/16 (26.9)	
	-NS4	1/4 Male NPT	1.84 (46.8)	0.56 (14.2)	9/16 (14.3)	
	-NS6	3/8 Male NPT	1.89 (48.0)	0.56 (14.2)	11/16 (17.5)	
	-NS8	1/2 Male NPT	2.11 (53.6)	0.75 (19.1)	7/8 (22.2)	
RP□□-TL RP□□-TA RP□□-C	-FL4	1/4" FITOK	1.41 (35.8)	1.06 (26.9)	1/2 (12.7)	
	-FL6	3/8" FITOK	1.49 (37.8)	1.20 (30.5)	5/8 (15.9)	
	-FL8	1/2" FITOK	1.61 (40.9)	1.42 (36.1)	13/16 (20.6)	
	-ML6	6 mm FITOK	1.41 (35.8)	1.06 (27.0)	1/2 (12.7)	
	-ML8	8 mm FITOK	1.48 (37.7)	14.95 (29.9)	5/8 (15.9)	
	-ML10	10 mm FITOK	1.52 (38.6)	1.24 (31.6)	11/16 (17.5)	
	-ML12	12 mm FITOK	1.60 (40.6)	1.41 (36.0)	13/16 (20.6)	
	-FNS4	1/4 Female NPT	1.66 (42.2)	1.17 (29.7)	11/16 (17.5)	
	-FNS6	3/8 Female NPT	1.75 (44.4)	1.42 (36.1)	13/16 (20.6)	
	-FNS8	1/2 Female NPT	1.75 (44.4)	1.56 (39.6)	1 (25.4)	
	-NS4	1/4 Male NPT	1.54 (39.2)	1.05 (26.7)	1/2 (12.7)	
	-NS6	3/8 Male NPT	1.68 (42.6)	1.17 (29.7)	11/16 (17.5)	
	-NS8	1/2 Male NPT	1.75 (44.4)	1.45 (36.8)	13/16 (20.6)	

1. FITOK means FITOK double ferrule tube fittings.
2. Dimensions are shown with FITOK nuts finger-tightened. All dimensions are for reference only and are subject to change.
3. Sizes and types listed are standard. Other sizes and types are available upon request.

Ordering Number Description

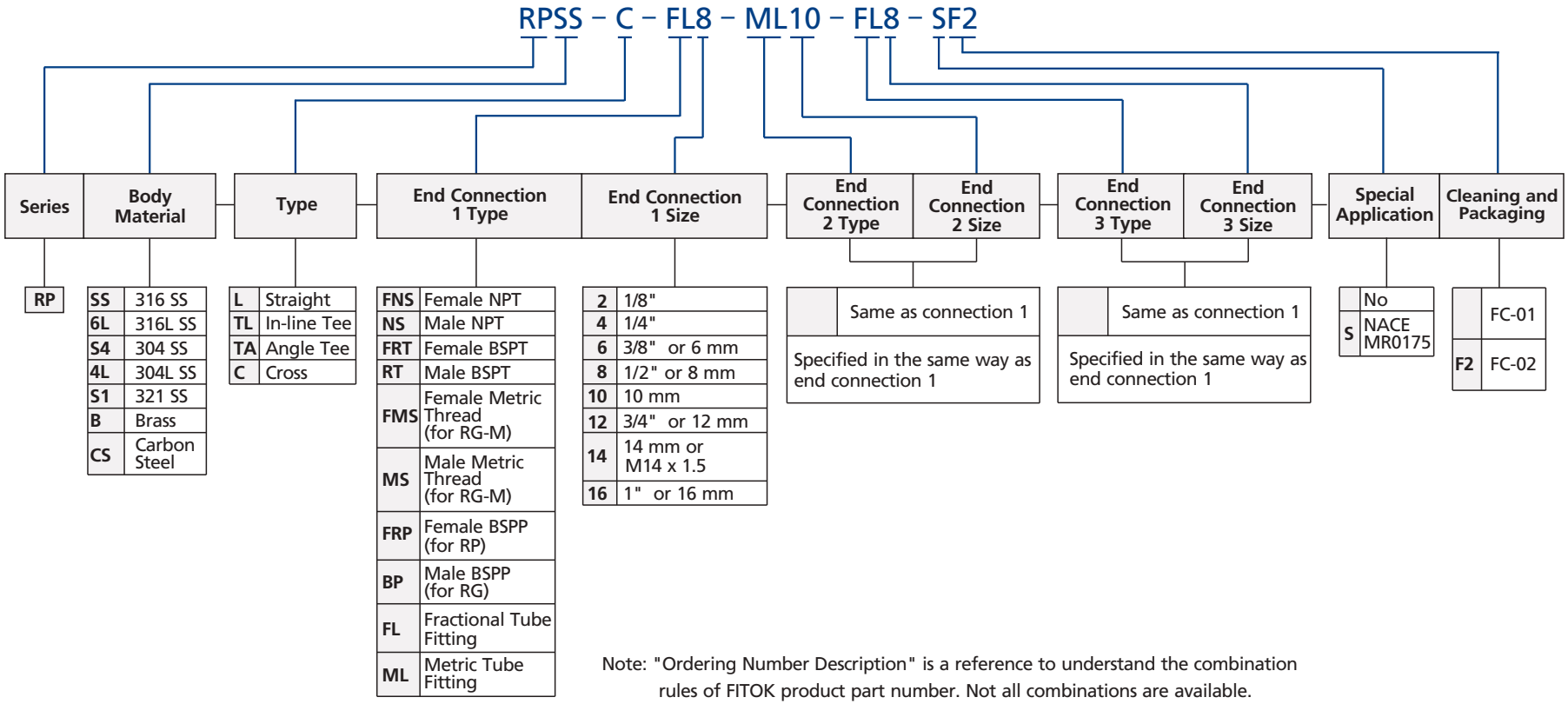

Note: "Ordering Number Description" is a reference to understand the combination rules of FITOK product part number. Not all combinations are available.

1. Standard thread pitch for metric threads are as follows:
   M10 and below: 1 mm
   M12 to M24: 1.5 mm
   M27 and above: 2 mm
   Standard thread pitch should be omitted in the ordering number, others should be specified.
2. Cleaning and Packaging:
   FC-01: Standard cleaning and packaging for general industrial procedures.
   FC-02: Special cleaning and packaging for wetted system components to ensure compliance with product cleanliness requirement of ASTM G93 Level C.

Filters

Filters



B-190

Filters

FT, FB, FI, FW and FH Series



Contents

Tee-Type Filters
FT Series



B-192

Bypass Filters
FB Series



B-198

In-Line Filters
FI Series



B-204

All-Welded In-Line Filters
FW Series



B-210

High-Capacity Filters
FH Series



B-213

Tee-Type Filters

FT Series



Introduction

Tee-Type Filters trap fine particle contaminants in pipelines. With easy-to-replace filter elements, these filters apply to gas and liquid services. Having been ECE R110 certified, they are also suitable for CNG/NGV applications.

Features

- Filtration area type: 4 and 8
- Union bonnet design to prevent lock nut from falling off and offer added safety
- Working pressure up to 6000 psig (414 bar)
- Working temperature: -20°F to 900°F (-28°C to 482°C)
- Variety of end connections available

Standard Materials of Construction

Item	Component	Body Material	
		316 SS	Brass
		Material Grade/ASTM Specification	
1	Body	F316 SS/A182	C37700/B283
		316 SS/A479	C36000/B16
2	Element	Sintered 316 SS or strainer 316 SS	
3	Gasket	Silver-plated 316 SS	Aluminum/B209
4	Spring	302 SS/A313	
5	Bonnet Nut	316 SS/A479	Brass C36000/B16
6	Backup Ring	Stainless steel	
7	Bonnet	316 SS/A479	Brass C36000/B16

Lubricants: molybdenum disulfide-based and silicone-based

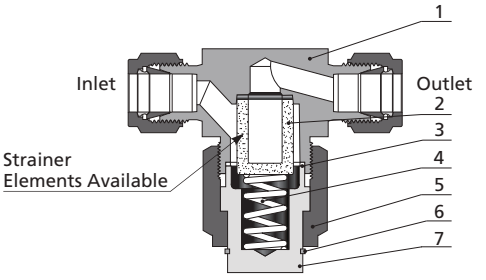

FT Series Sintered Filter Shown

Pressure vs. Temperature

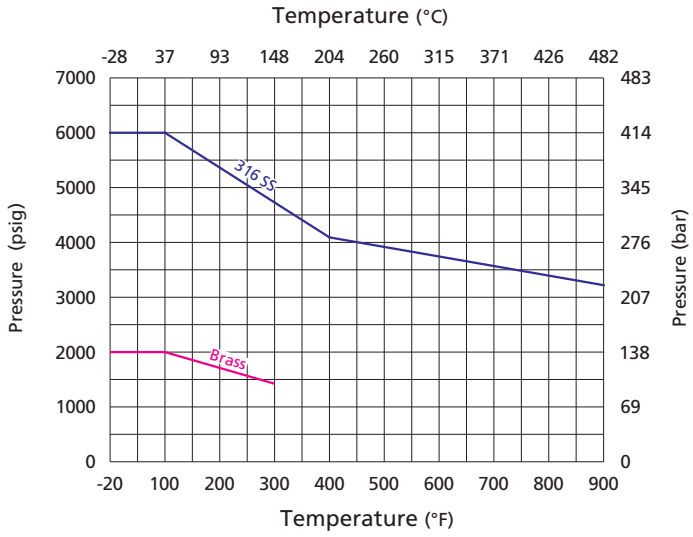

Filter Elements

Sintered

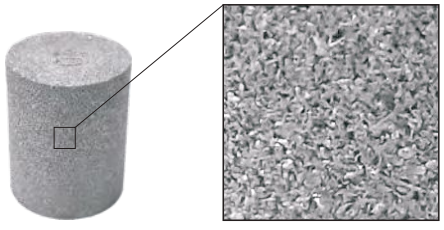

Magnified 10×

◎ 316 SS powder metallurgy
◎ Irregular pores to trap impurity ions with smaller diameters

Strainer

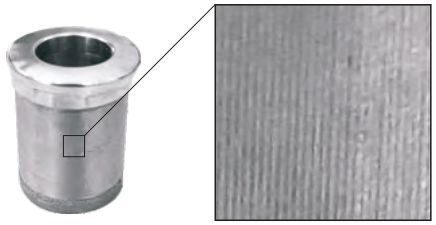

Magnified 10×

◎ 316 SS wire mesh
◎ Uniform mesh pores to trap impurity ions with larger diameters

Nominal Pore Size of Filter Elements

	Nominal Pore Size	Pore Size Range	Element Designator
Sintered	0.5 μm	0.5 to 2 μm	05
	2 μm	1 to 4 μm	2
	7 μm	5 to 10 μm	7
	15 μm	11 to 25 μm	15
	40 μm	35 to 53 μm	40
	60 μm	50 to 75 μm	60
	80 μm	70 to 95 μm	80
Strainer	100 μm	140 mesh	100
	150 μm	100 mesh	150
	250 μm	60 mesh	250
	450 μm	40 mesh	450

Note: Filter elements remove 95% of particles larger than the nominal pore size.

Filtration Area

Filtration Area Type	Filtration Area, in.^{2} (mm^2)	
	Sintered	Strainer
4	1.30 (830)	1.00 (640)
8	2.00 (1280)	1.70 (1090)

Maximum Differential Pressure of Clean Filter at 70°F (20°C)

Maximum Differential Pressure psig (bar)										
0.5 µm	2 µm	7 µm	15 µm	40 µm	60 µm	80 µm	100 µm	150 µm	250 µm	450 µm
1000 (69.0)										

Flow Data

Filtration Area Type	Element Nominal Pore Size µm	Element Type	Inlet Pressure, psig (bar)			Pressure Drop, psig (bar)		
			5 (0.34)	10 (0.68)	15 (1.0)	10 (0.68)	50 (3.4)	100 (6.8)
			Air Flow, std ft^3/min (L/min)			Water Flow, U.S. gal/min (L/min)		
4	0.5	Sintered	0.12 (3.4)	0.26 (7.3)	0.48 (13)	0.04 (0.15)	0.17 (0.64)	0.29 (1.0)
	2	Sintered	0.60 (17)	1.4 (39)	2.3 (65)	0.24 (0.90)	0.86 (3.2)	1.3 (4.9)
	7	Sintered	1.4 (39)	2.9 (82)	4.7 (130)	0.40 (1.5)	1.3 (4.9)	2.0 (7.5)
	15	Sintered	1.2 (34)	2.9 (82)	4.7 (130)	0.50 (1.8)	1.3 (4.9)	2.1 (7.9)
	60	Sintered	3.1 (87)	5.9 (160)	8.5 (240)	0.80 (3.0)	2.7 (10)	3.9 (14)
	80	Sintered	4.1 (110)	7.5 (210)	10 (280)	1.1 (4.1)	3.4 (12)	4.9 (18)
	40, 60, 80, 100, 150, 250, 450	Strainer	4.7 (130)	8.8 (250)	12 (340)	1.2 (4.5)	4.2 (15)	5.6 (21)
8	0.5	Sintered	0.36 (10)	0.86 (24)	1.6 (45)	0.09 (0.34)	0.40 (1.5)	0.76 (2.8)
	2	Sintered	1.4 (39)	2.8 (79)	4.0 (110)	0.26 (0.98)	1.1 (4.1)	1.6 (6.0)
	7	Sintered	1.8 (51)	4.2 (119)	6.8 (190)	0.64 (2.4)	2.2 (8.3)	3.5 (13)
	15	Sintered	1.8 (51)	4.9 (130)	7.9 (220)	0.84 (3.1)	2.6 (9.8)	4.1 (15)
	60	Sintered	5.1 (140)	10 (280)	15 (420)	1.5 (5.6)	4.8 (18)	6.7 (25)
	80	Sintered	6.1 (170)	11 (310)	16 (450)	1.7 (6.4)	5.5 (20)	7.6 (28)
	40, 60, 80, 100, 150, 250, 450	Strainer	7.2 (200)	14 (390)	20 (560)	2.4 (9.0)	7.2 (27)	10 (37)

Note: Outlet is discharged to the atmosphere.

Dimensions and Ordering Information

Dimensions, in inches (millimeters), are for reference only.

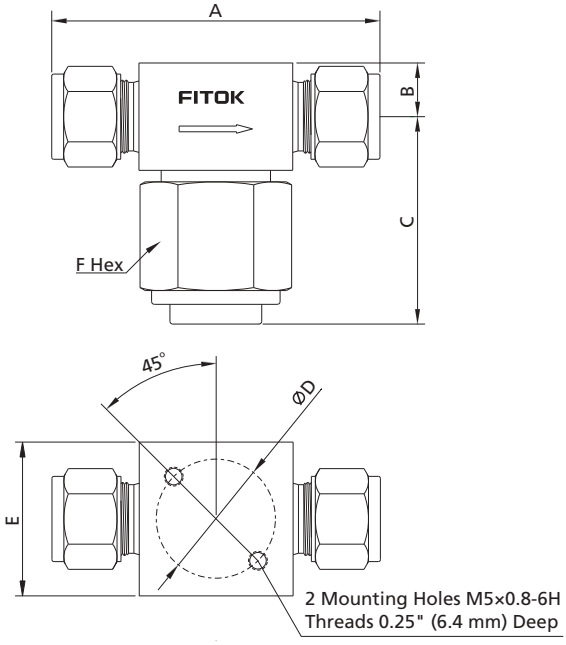

Basic Ordering Number	Connection Type and Size		Filtration Area Type	Dimensions, in. (mm)					
	Inlet	Outlet		A	B	C	ØD	E	F
FT□□-FL2-	1/8" Tube Fitting	1/8" Tube Fitting	4	2.27 (57.7)	0.38 (9.7)	1.49 (37.8)	1.00 (25.4)	1.00 (25.4)	1 (25.4)
FT□□-FL4-	1/4" Tube Fitting	1/4" Tube Fitting	4	2.47 (62.7)					
FT□□-FL6-	3/8" Tube Fitting	3/8" Tube Fitting	8	2.84 (72.1)	0.46 (11.7)	1.74 (44.2)	1.13 (28.7)	1.13 (28.7)	1 1/8 (28.6)
FT□□-FL8-	1/2" Tube Fitting	1/2" Tube Fitting	8	3.04 (77.2)					
FT□□-ML6-	6 mm Tube Fitting	6 mm Tube Fitting	4	2.46 (62.5)	0.38 (9.7)	1.49 (37.8)	1.00 (25.4)	1.00 (25.4)	1 (25.4)
FT□□-ML8-	8 mm Tube Fitting	8 mm Tube Fitting	8	2.84 (72.1)	0.46 (11.7)	1.74 (44.2)	1.13 (28.7)	1.13 (28.7)	1 1/8 (28.6)
FT□□-ML10-	10 mm Tube Fitting	10 mm Tube Fitting	8	2.86 (72.6)					
FT□□-ML12-	12 mm Tube Fitting	12 mm Tube Fitting	8	3.04 (77.2)					
FT□□-TS4-	1/4" Tube Socket Weld	1/4" Tube Socket Weld	4	1.68 (42.7)	0.38 (9.7)	1.49 (37.8)	1.00 (25.4)	1.00 (25.4)	1 (25.4)
FT□□-TS6-	3/8" Tube Socket Weld	3/8" Tube Socket Weld	4						
FT□□-TB4-	1/4"×0.065" Tube Butt Weld	1/4"×0.065" Tube Butt Weld	4						
FT□□-TB6-	3/8"×0.095" Tube Butt Weld	3/8"×0.095" Tube Butt Weld	4						
FT□□-FNS2-	1/8 Female NPT	1/8 Female NPT	4	2.00 (50.8)					
FT□□-FNS4-	1/4 Female NPT	1/4 Female NPT	4	2.13 (54.1)					
FT□□-NS4-	1/4 Male NPT	1/4 Male NPT	4						
FT□□-NS6-	3/8 Male NPT	3/8 Male NPT	8	2.38 (60.5)	0.46 (11.7)	1.74 (44.2)	1.13 (28.7)	1.13 (28.7)	1 1/8 (28.6)
FT□□-NS8-	1/2 Male NPT	1/2 Male NPT	8	2.75 (69.9)					
FT□□-FR4-	1/4 Male FR	1/4 Male FR	4	2.30 (58.4)	0.38 (9.7)	1.49 (37.8)	1.00 (25.4)	1.00 (25.4)	1 (25.4)
FT□□-FR8-	1/2 Male FR	1/2 Male FR	8	2.55 (64.8)	0.46 (11.7)	1.74 (44.2)	1.13 (28.7)	1.13 (28.7)	1 1/8 (28.6)

1. Mounting holes not available with 1/4 female NPT end connections
2. FR means metal gasket seal fittings.
3. Sizes and types listed are standard. Other sizes and types are available upon request.
4. Dimensions are shown with FITOK nuts finger-tightened. All dimensions are for reference only and are subject to change. For dimensions not shown above, please contact FITOK Group or our authorized distributors.

CNG/NGV Application

FT Series Filters with ECE R110 Type Approval (Class 0) are available.
Rated temperatures: -40°F to 248°F (-40°C to 120°C)
Rated pressure within the temperature range: 3370 psig (260 bar)
To order, add the suffix -R110 to the standard FT series filter ordering number.
Example: FTSS-FL4-15-R110

Special Alloys

Alloy filters are available, featuring sintered filter elements made from Alloy C-276. For details, please contact FITOK.

Filters Ordering Number Description

FT6L – FL4 – ML10 – S – □15 – SF2

Body Material

SS	316 SS
6L	316L SS
S4	304 SS
4L	304L SS
HC	Alloy C-276
B	Brass

Series

FT

Inlet Type

FNS	Female NPT
NS	Male NPT
FRT	Female BSPT
RT	Male BSPT
FMS	Female Metric Thread (for RP gasket)
MS	Male Metric Thread (for RG gasket)
FRP	Female BSPP (for RP gasket)
BP	Male BSPP (for RP gasket)
FL	Fractional Tube Fitting
ML	Metric Tube Fitting
TS	Fractional Tube Socket Weld
TB	Fractional Tube Butt Weld
FR	Male FR Fitting

Outlet Type

	Same as Inlet
Specified in the same way as the inlet type and size	

Outlet Size / Inlet Size

2	1/8"
4	1/4"
6	3/8" or 6 mm
8	1/2" or 8 mm
10	10 mm
12	3/4" or 12 mm

Element Type

	Sintered
S	Strainer (316 SS Only)

Gasket Material

	Silver-plated 316 SS
A	Aluminum (the only option for brass body)

Element Nominal Pore Size

05	0.5 µm (Sintered)
2	2 µm
7	7 µm
15	15 µm
40	40 µm
60	60 µm
80	80 µm
100	100 µm (Strainer)
150	150 µm (Strainer)
250	250 µm (Strainer)
450	450 µm (Strainer)
EL	Without filter element

Special Application

	None
S	NACE MR0175
R110	ECE R110

Cleaning and Packaging

	FC-01
F2	FC-02

Note: "Ordering Number Description" is a reference to understand the combination rules of FITOK product part number. Not all combinations are available.

1. Cleaning and Packaging:
   FC-01: Standard cleaning and packaging for basic industrial procedures.
   FC-02: Special cleaning and packaging for wetted system components to ensure compliance requirement as stated in ASTM G93 Level C.
2. Standard thread pitch for metric threads are as follows:
   M10 and below: 1 mm
   M12 to M24: 1.5 mm
   M27 and above: 2 mm
   Standard thread pitch should be ignored in the ordering number, others should be specified.

Elements Ordering Number Description

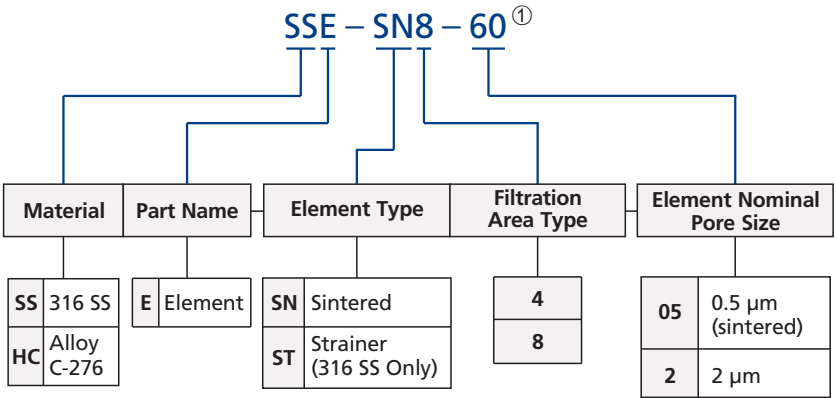

Note: "Ordering Number Description" is a reference to understand the combination rules of FITOK product part number. Not all combinations are available.

① The FT and FB series filters share identical filter element models, while some filter element models for the FI series filters are also same with the FT and FB series. A filter element model represents a single, consistent filter product, meaning one filter element can be used across multiple filter series.

Bypass Filters

FB Series



Introduction

Bypass Filters can be used for medium sampling and element cleaning. Filter elements are available in multiple types of filtration accuracy and are easy to replace, making them suitable for use in gas and fluid service.

Features

- Filtration area type: 4 and 8
- Union bonnet design to prevent lock nut from falling off and offer added safety
- Working pressure up to 6000 psig (414 bar)
- Working temperature: -20°F to 900°F (-28°C to 482°C)
- Variety of end connections available

Standard Materials of Construction

Item	Component	Body Material	
		316 SS	Brass
		Material Grade/ASTM Specification	
1	Body	F316 SS/A182	C37700/B283
		316 SS/A479	C36000/B16
2	Element	Sintered 316 SS or strainer 316 SS	
3	Gasket	Silver-plated 316 SS	Aluminum/B209
4	Spring	302 SS/A313	
5	Bonnet Nut	316 SS/A479	Brass C36000/B16
6	Backup Ring	Stainless steel	
7	Bonnet	316 SS/A479	Brass C36000/B16

Lubricants: molybdenum disulfide-based and silicone-based

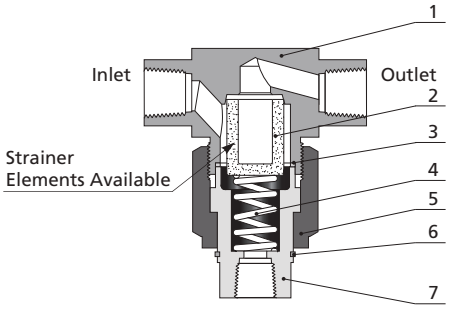

FB Series Sintered Filter Shown

Pressure vs. Temperature

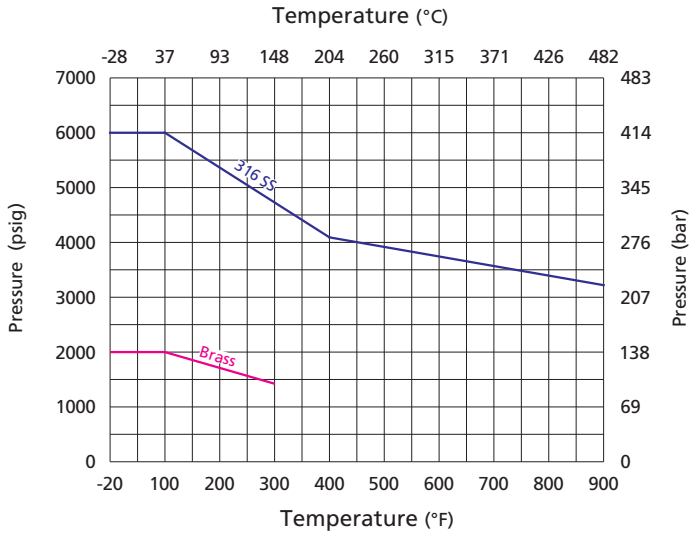

Filter Elements

Sintered

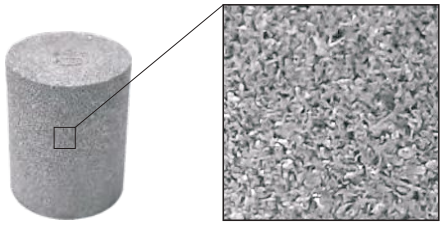

Magnified 10×

◎ 316 SS powder metallurgy
◎ Irregular pores to trap impurity ions with smaller diameters

Strainer

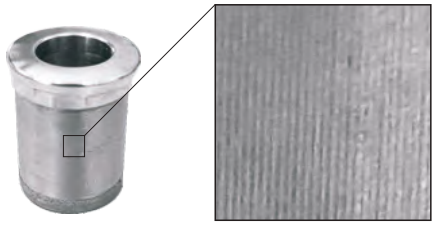

Magnified 10×

◎ 316 SS wire mesh
◎ Uniform mesh pores to trap impurity ions with larger diameters

Nominal Pore Size of Filter Elements

	Nominal Pore Size	Pore Size Range	Element Designator
Sintered	0.5 µm	0.5 to 2 µm	05
	2 µm	1 to 4 µm	2
	7 µm	5 to 10 µm	7
	15 µm	11 to 25 µm	15
	40 µm	35 to 53 µm	40
	60 µm	50 to 75 µm	60
	80 µm	70 to 95 µm	80
Strainer	100 µm	140 mesh	100
	150 µm	100 mesh	150
	250 µm	60 mesh	250
	450 µm	40 mesh	450

Note: Filter elements remove 95% of particles larger than the nominal pore size.

Filtration Area

Filtration Area Type	Filtration Area, in.^{2} (mm^2)	
	Sintered	Strainer
4	1.30 (830)	1.00 (640)
8	2.00 (1280)	1.70 (1090)

Maximum Differential Pressure of Clean Filter at 70°F (20°C)

Maximum Differential Pressure psig (bar)										
0.5 µm	2 µm	7 µm	15 µm	40 µm	60 µm	80 µm	100 µm	150 µm	250 µm	450 µm
1000 (69.0)										

Flow Data

Filtration Area Type	Element Nominal Pore Size µm	Element Type	Inlet Pressure, psig (bar)			Pressure Drop, psig (bar)		
			5 (0.34)	10 (0.68)	15 (1.0)	10 (0.68)	50 (3.4)	100 (6.8)
			Air Flow, std ft^3/min (L/min)			Water Flow, U.S. gal/min (L/min)		
4	0.5	Sintered	0.12 (3.4)	0.26 (7.3)	0.48 (13)	0.04 (0.15)	0.17 (0.64)	0.29 (1.0)
	2	Sintered	0.60 (17)	1.4 (39)	2.3 (65)	0.24 (0.90)	0.86 (3.2)	1.3 (4.9)
	7	Sintered	1.4 (39)	2.9 (82)	4.7 (130)	0.40 (1.5)	1.3 (4.9)	2.0 (7.5)
	15	Sintered	1.2 (34)	2.9 (82)	4.7 (130)	0.50 (1.8)	1.3 (4.9)	2.1 (7.9)
	60	Sintered	3.1 (87)	5.9 (160)	8.5 (240)	0.80 (3.0)	2.7 (10)	3.9 (14)
	80	Sintered	4.1 (110)	7.5 (210)	10 (280)	1.1 (4.1)	3.4 (12)	4.9 (18)
	40, 60, 80, 100, 150, 250, 450	Strainer	4.7 (130)	8.8 (250)	12 (340)	1.2 (4.5)	4.2 (15)	5.6 (21)
8	0.5	Sintered	0.36 (10)	0.86 (24)	1.6 (45)	0.09 (0.34)	0.40 (1.5)	0.76 (2.8)
	2	Sintered	1.4 (39)	2.8 (79)	4.0 (110)	0.26 (0.98)	1.1 (4.1)	1.6 (6.0)
	7	Sintered	1.8 (51)	4.2 (119)	6.8 (190)	0.64 (2.4)	2.2 (8.3)	3.5 (13)
	15	Sintered	1.8 (51)	4.9 (130)	7.9 (220)	0.84 (3.1)	2.6 (9.8)	4.1 (15)
	60	Sintered	5.1 (140)	10 (280)	15 (420)	1.5 (5.6)	4.8 (18)	6.7 (25)
	80	Sintered	6.1 (170)	11 (310)	16 (450)	1.7 (6.4)	5.5 (20)	7.6 (28)
	40, 60, 80, 100, 150, 250, 450	Strainer	7.2 (200)	14 (390)	20 (560)	2.4 (9.0)	7.2 (27)	10 (37)

Note: Outlet is discharged to the atmosphere.

Dimensions and Ordering Information

Dimensions, in inches (millimeters), are for reference only.

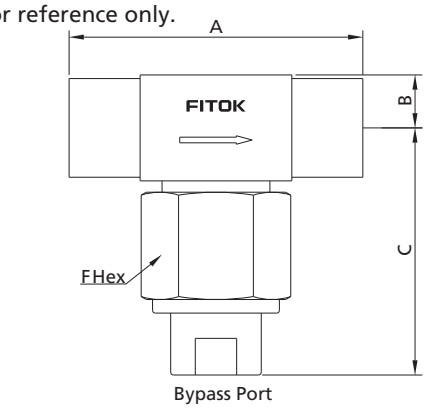

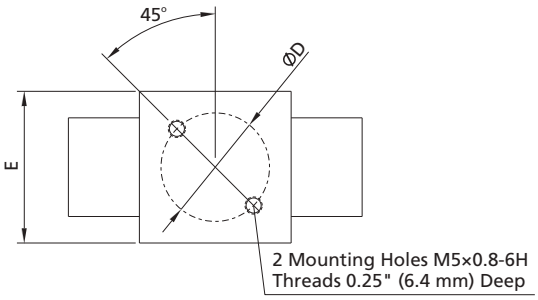

Basic Ordering Number	Connection Type and Size		Filtration Area Type	Dimensions, in. (mm)						
	Inlet	Outlet		A	B	C	ØD	E	F	Bypass Port
FB□□-FL2-	1/8" Tube Fitting	1/8" Tube Fitting	4	2.27 (57.7)	0.38 (9.7)	1.98 (50.2)	1.00 (25.4)	1.00 (25.4)	1 (25.4)	FL2
FB□□-FL4-	1/4"Tube Fitting	1/4" Tube Fitting	4	2.47 (62.7)		2.44 (61.9)				FL4
FB□□-FL6-	3/8"Tube Fitting	3/8" Tube Fitting	8	2.84 (72.1)	0.46 (11.7)	2.74 (69.1)	1.13 (28.7)	1.13 (28.7)	1 1/8 (28.6)	FL6
FB□□-FL8-	1/2" Tube Fitting	1/2" Tube Fitting	8	3.04 (77.2)		2.96 (74.2)				FL8
FB□□-ML6-	6 mm Tube Fitting	6 mm Tube Fitting	4	2.46 (62.5)	0.38 (9.7)	2.44 (61.9)	1.00 (25.4)	1.00 (25.4)	1 (25.4)	FL4
FB□□-ML8-	8 mm Tube Fitting	8 mm Tube Fitting	8	2.84 (72.1)	0.46 (11.7)	2.74 (69.1)	1.13 (28.7)	1.13 (28.7)	1 1/8 (28.6)	FL6
FB□□-ML10-	10 mm Tube Fitting	10 mm Tube Fitting	8	2.86 (72.6)		2.96 (74.2)				FL8
FB□□-ML12-	12 mm Tube Fitting	12 mm Tube Fitting	8	3.04 (77.2)						
FB□□-TS4-	1/4" Tube Socket Weld	1/4" Tube Socket Weld	4	1.68 (42.7)	0.38 (9.7)	1.83 (56.4)	1.00 (25.4)	1.00 (25.4)	1 (25.4)	TS4
FB□□-TS6-	3/8" Tube Socket Weld	3/8" Tube Socket Weld	4							
FB□□-TB4-	1/4"×0.065" Tube Butt Weld	1/4"×0.065" Tube Butt Weld	4							
FB□□-TB4-	3/8"×0.095" Tube Butt Weld	3/8"×0.095" Tube Butt Weld	4							
FB□□-FNS2-	1/8 Female NPT	1/8 Female NPT	4	2.00 (50.8)		1.71 (43.4)				FNS2
FB□□-FNS4-	1/4 Female NPT	1/4 Female NPT	4	2.13 (54.1)						
FB□□-NS4-	1/4 Male NPT	1/4 Male NPT	4							
FB□□-NS6-	3/8 Male NPT	3/8 Male NPT	8	2.38 (60.5)	0.46 (11.7)	2.00 (50.8)	1.13 (28.7)	1.13 (28.7)	1 1/8 (28.6)	
FB□□-NS8-	1/2 Male NPT	1/2 Male NPT	8	2.75 (69.9)						
FB□□-FR4-	1/4 Male FR	1/4 Male FR	4	2.38 (60.5)	0.38 (9.7)	2.44 (61.9)	1.00 (25.4)	1.00 (25.4)	1 (25.4)	FL4
FB□□-FR8-	1/2 Male FR	1/2 Male FR	8	2.75 (69.9)	0.46 (11.7)	2.96 (74.2)	1.13 (28.7)	1.13 (28.7)	1 1/8 (28.6)	FL8

1. Mounting holes not available with 1/4 female NPT end connections.
2. FR means metal gasket seal fittings.
3. Sizes and types listed are standard. Other sizes and types are available upon request.
4. Dimensions are shown with FITOK nuts finger-tightened. All dimensions are for reference only and are subject to change. For dimensions not shown above, please contact FITOK Group or our authorized distributors.

Special Alloys

Alloy filters are available, featuring sintered filter elements made from Alloy C-276. For details, please contact FITOK.

Filters Ordering Number Description

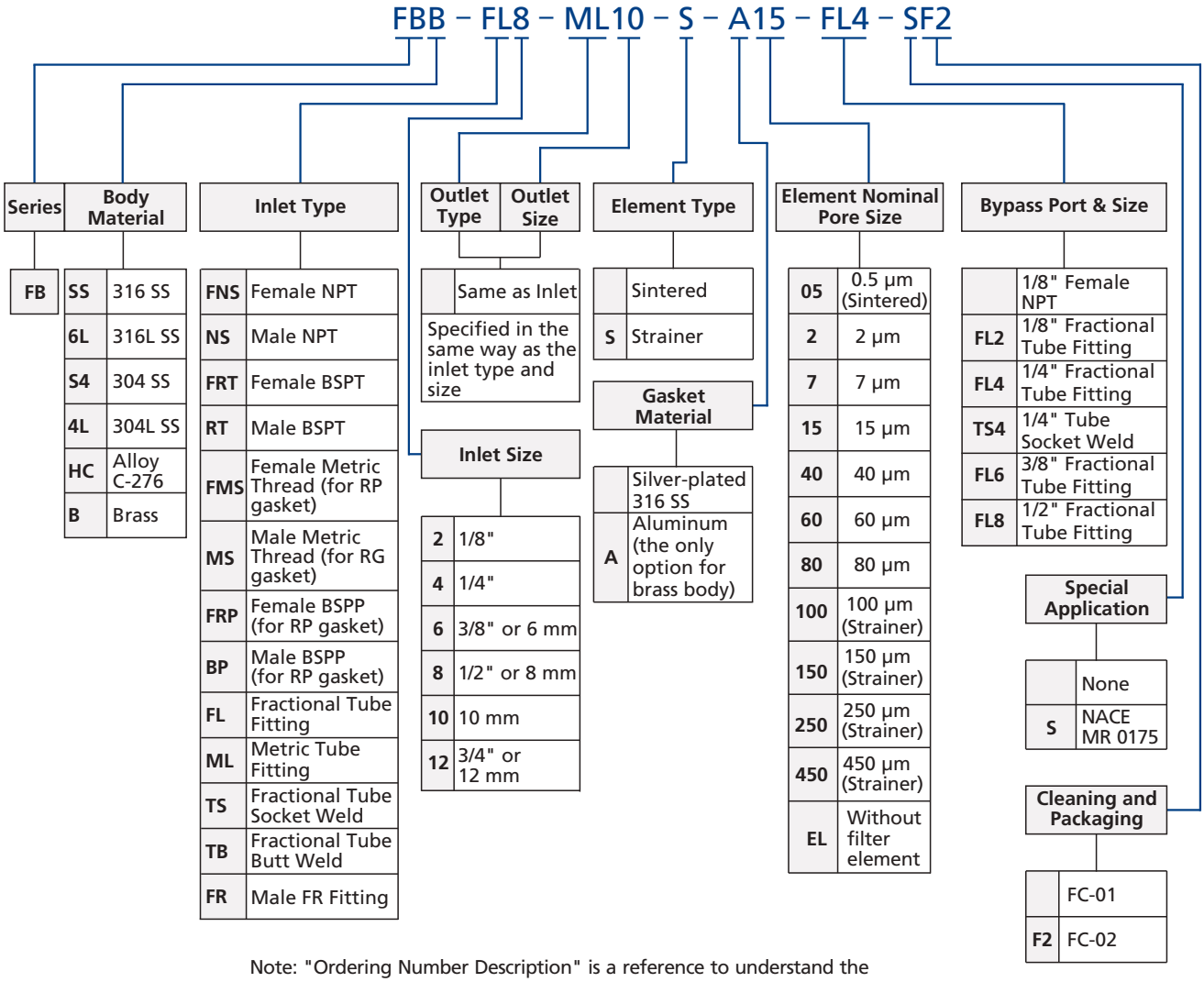

Note: "Ordering Number Description" is a reference to understand the combination rules of FITOK product part number. Not all combinations are available.

1. Cleaning and Packaging:
   FC-01: Standard cleaning and packaging for basic industrial procedures.
   FC-02: Special cleaning and packaging for wetted system components to ensure compliance requirement as stated in ASTM G93 Level C.
2. Standard thread pitch for metric threads are as follows:
   M10 and below: 1 mm
   M12 to M24: 1.5 mm
   M27 and above: 2 mm
   Standard thread pitch should be ignored in the ordering number, others should be specified.

Elements Ordering Number Description

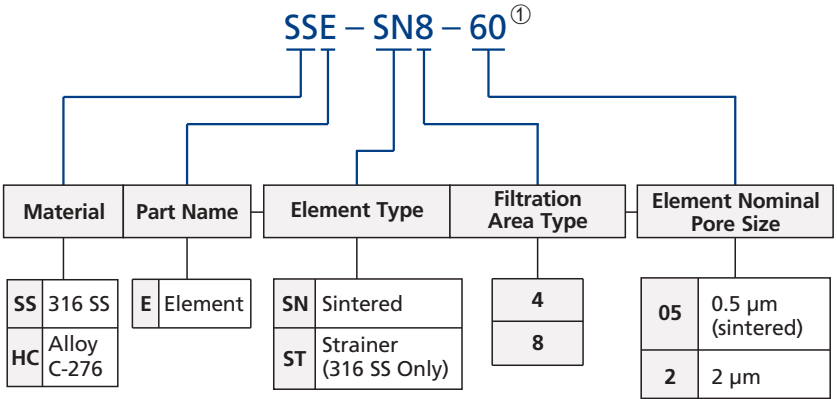

Note: "Ordering Number Description" is a reference to understand the combination rules of FITOK product part number. Not all combinations are available.

① The FT and FB series filters share identical filter element models, while some filter element models for the FI series filters are also same with the FT and FB series. A filter element model represents a single, consistent filter product, meaning one filter element can be used across multiple filter series.

In-Line Filters

FI Series



Introduction

In-Line Filters are compact-designed to trap particle contaminants in gas or liquid service in limited space. Filter elements are available in multiple types of filtration accuracy to meet filtration needs of various pipelines.

Features

- Filtration area type: 2, 4 and 8
- Compact and space-saving design
- Working pressure up to 3000 psig (207 bar)
- Working temperature: -20°F to 900°F (-28°C to 482°C)
- Variety of end connections available

Standard Materials of Construction

Item	Component	Body Material	
		316 SS	Brass
		Material Grade/ASTM Specification	
1	Body	316 SS/A479	C36000/B16
2	Element	Sintered 316 SS or strainer 316 SS	
3	Gasket	Silver-plated 316 SS	Aluminum/B209
4	Spring	302 SS/A313	
5	Bonnet Nut	316 SS/A479	Brass C36000/B16
6	Backup Ring	Stainless steel	
7	Bonnet	316 SS/A479	Brass C36000/B16

Lubricants: molybdenum disulfide-based and silicone-based

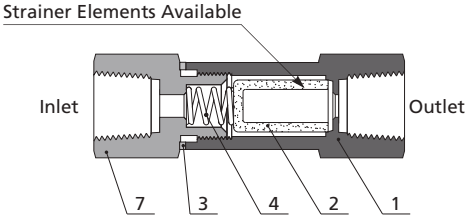

FI Series Sintered Filter Shown

Pressure vs. Temperature

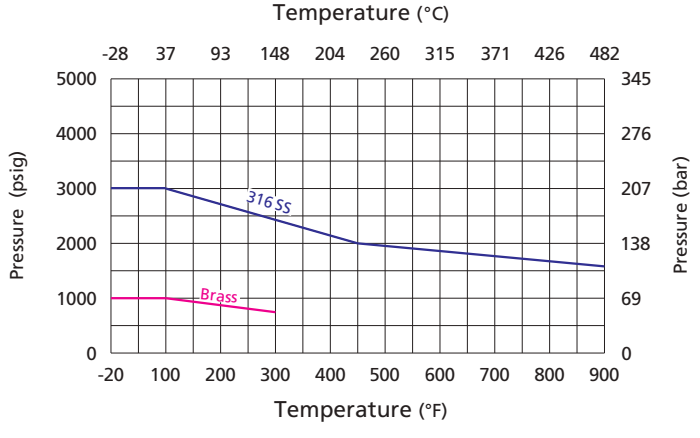

Filter Elements

Sintered

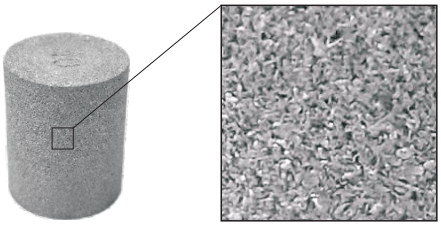

Magnified 10×

◎ 316 SS powder metallurgy
◎ Irregular pores to trap impurity ions with smaller diameters

Strainer

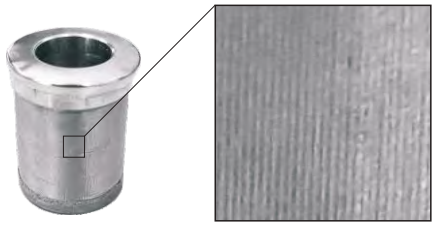

Magnified 10×

◎ 316 SS wire mesh
◎ Uniform mesh pores to trap impurity ions with larger diameters

Nominal Pore Size of Filter Elements

	Nominal Pore Size	Pore Size Range	Element Designator
Sintered	0.5 μm	0.5 to 2 μm	05
	2 μm	1 to 4 μm	2
	7 μm	5 to 10 μm	7
	15 μm	11 to 25 μm	15
	40 μm	35 to 53 μm	40
	60 μm	50 to 75 μm	60
	80 μm	70 to 95 μm	80
Strainer	100 μm	140 mesh	100
	150 μm	100 mesh	150
	250 μm	60 mesh	250
	450 μm	40 mesh	450

Note: Filter elements remove 95% of particles larger than the nominal pore size.

Filtration Area

Filtration Area Type	Filtration Area, $in.^2$ (mm^2)	
	Sintered	Strainer
2	0.55 (350)	——
4	1.30 (830)	1.00 (640)
8	2.00 (1280)	1.70 (1090)

Note: No strainer element option for FI series filtration area type.

Maximum Differential Pressure of Clean Filter at 70°F (20°C)

Maximum Differential Pressure psig (bar)										
0.5 μm	2 μm	7 μm	15 μm	40 μm	60 μm	80 μm	100 μm	150 μm	250 μm	450 μm
1000 (69.0)										

Flow Data

Filtration Area Type	Element Nominal Pore Size µm	Element Type	Inlet Pressure, psig (bar)			Pressure Drop, psig (bar)		
			5 (0.34)	10 (0.68)	15 (1.0)	10 (0.68)	50 (3.4)	100 (6.8)
			Air Flow, std ft^3/min (L/min)			Water Flow, U.S. gal/min (L/min)		
2	0.5	Sintered	0.04 (1.1)	0.06 (1.7)	0.12 (3.4)	0.01 (0.03)	0.04 (0.15)	0.12 (0.45)
	2	Sintered	0.20 (5.6)	0.40 (11)	0.60 (17)	0.08 (0.30)	0.24 (0.91)	0.40 (1.5)
	7	Sintered	0.50 (14)	0.90 (25)	1.2 (34)	0.10 (0.37)	0.30 (1.1)	0.48 (1.8)
	15	Sintered	0.80 (22)	1.3 (36)	1.5 (42)	0.12 (0.45)	0.36 (1.3)	0.58 (2.1)
	60	Sintered	1.7 (48)	2.2 (62)	2.4 (68)	0.15 (0.56)	0.50 (1.8)	0.70 (2.6)
	80	Sintered	1.8 (51)	2.2 (62)	2.6 (73)	0.20 (0.75)	0.50 (1.8)	0.60 (2.2)
4	0.5	Sintered	0.12 (3.4)	0.26 (7.3)	0.48 (13)	0.04 (0.15)	0.17 (0.64)	0.29 (1.0)
	2	Sintered	0.60 (17)	1.4 (39)	2.3 (65)	0.24 (0.90)	0.86 (3.2)	1.3 (4.9)
	7	Sintered	1.4 (39)	2.9 (82)	4.7 (130)	0.40 (1.5)	1.3 (4.9)	2.0 (7.5)
	15	Sintered	1.2 (34)	2.9 (82)	4.7 (130)	0.50 (1.8)	1.3 (4.9)	2.1 (7.9)
	60	Sintered	3.1 (87)	5.9 (160)	8.5 (240)	0.90 (3.4)	3.3 (12)	4.6 (17)
	80	Sintered	4.1 (110)	7.5 (210)	10 (280)	1.2 (4.5)	4.2 (15)	6.1 (23)
	40, 60, 80, 100, 150, 250, 450	Strainer	4.7 (130)	8.8 (250)	12 (340)	1.7 (6.4)	5.6 (21)	7.8 (29)
8	0.5	Sintered	0.36 (10)	0.86 (24)	1.6 (45)	0.09 (0.34)	0.40 (1.5)	0.76 (2.8)
	2	Sintered	1.4 (39)	2.8 (79)	4.0 (110)	0.26 (0.98)	1.1 (4.1)	1.6 (6.0)
	7	Sintered	1.8 (51)	4.2 (119)	6.8 (190)	0.64 (2.4)	2.2 (8.3)	3.5 (13)
	15	Sintered	1.8 (51)	4.9 (130)	7.9 (220)	0.84 (3.1)	2.6 (9.8)	4.1 (15)
	60	Sintered	5.1 (140)	10 (280)	15 (420)	2.0 (7.5)	6.7 (25)	10 (37)
	80	Sintered	6.1 (170)	11 (310)	16 (450)	2.3 (8.7)	7.6 (28)	11 (41)
	40, 60, 80, 100, 150, 250, 450	Strainer	7.2 (200)	14 (390)	20 (560)	4.8 (18)	15 (56)	19 (71)

Note: Outlet is discharged to the atmosphere.

Dimensions and Ordering Information

Dimensions, in inches (millimeters), are for reference only.

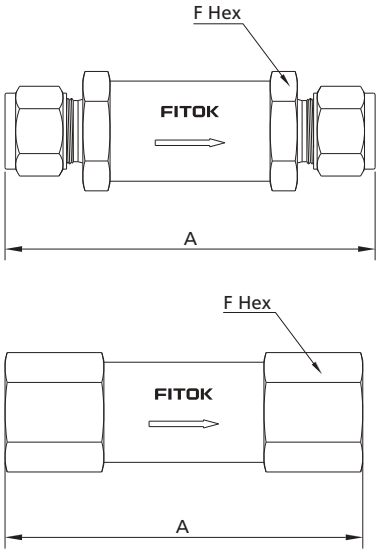

Basic Ordering Number	Connection Type and Size		Filtration Area Type	Dimensions in. (mm)	
	Inlet	Outlet		A	F
FI□□-FL2-	1/8" Tube Fitting	1/8" Tube Fitting	2	2.35 (59.7)	9/16 (14.3)
FI□□-FL4-	1/4" Tube Fitting	1/4" Tube Fitting	4	2.95 (74.9)	3/4 (19.1)
FI□□-FL6-	3/8" Tube Fitting	3/8" Tube Fitting	8	3.21 (81.5)	1 (25.4)
FI□□-FL8-	1/2" Tube Fitting	1/2" Tube Fitting	8	3.49 (88.6)	
FI□□-ML3-	3 mm Tube Fitting	3 mm Tube Fitting	2	2.38 (60.5)	9/16 (14.3)
FI□□-ML6-	6 mm Tube Fitting	6 mm Tube Fitting	4	2.96 (75.2)	3/4 (19.1)
FI□□-FNS2-	1/8 Female NPT	1/8 Female NPT	2	2.16 (54.9)	9/16 (14.3)
FI□□-FNS4-	1/4 Female NPT	1/4 Female NPT	4	2.87 (72.9)	3/4 (19.1)
FI□□-NS2-	1/8 Male NPT	1/8 Male NPT	2	1.88 (47.7)	9/16 (14.3)
FI□□-NS4-	1/4 Male NPT	1/4 Male NPT	4	2.69 (68.3)	3/4 (19.1)
FI□□-FR2-	1/8 Male FR	1/8 Male FR	2	2.79 (70.8)	
FI□□-FR4-	1/4 Male FR	1/4 Male FR	4		
FI□□-FRT2-	1/8 Female BSPT	1/8 Female BSPT	2	2.16 (54.9)	9/16 (14.3)
FI□□-FRT4-	1/4 Female BSPT	1/4 Female BSPT	4	2.87 (72.9)	3/4 (19.1)
FI□□-RT2-	1/8 Male BSPT	1/8 Male BSPT	2	1.88 (47.7)	9/16 (14.3)
FI□□-RT4-	1/4 Male BSPT	1/4 Male BSPT	4	2.69 (68.3)	3/4 (19.1)

1. FR means metal gasket seal fittings.
2. Sizes and types listed are standard. Other sizes and types are available upon request.
3. Dimensions are shown with FITOK nuts finger-tightened. All dimensions are for reference only and are subject to change. For dimensions not shown above, please contact FITOK Group or our authorized distributors.

Special Alloys

Alloy filters in some sizes are available, featuring sintered filter elements made from Alloy C-276. For details, please contact FITOK.

Filters Ordering Number Description

FIB – FL4 – ML6 – S – A15 – SF2

Series	Body Material		Inlet Type		Outlet Type / Outlet Size		Element Type		Element Nominal Pore Size		Special Application	
FI	SS	316 SS	FNS	Female NPT		Same as Inlet		Sintered	05	0.5 μm (Sintered)		None
	6L	316L SS	NS	Male NPT	Specified in the same way as the inlet type and size		S	Strainer (316 SS Only)	2	2 μm	S	NACE MR0175
	S4	304 SS	FRT	Female BSPT					7	7 μm		
	4L	304L SS	RT	Male BSPT			Gasket Material		15	15 μm	Cleaning and Packaging	
	HC	Alloy C-276	FMS	Female Metric Thread (for RP gasket)	Inlet Size				40	40 μm		
	B	Brass	MS	Male Metric Thread (for RG gasket)				Silver-plated 316 SS	60	60 μm		FC-01
			FRP	Female BSPP (for RP gasket)	2	1/8"	A	Aluminum (the only option for brass body)	80	80 μm	F2	FC-02
			BP	Male BSPP (for RP gasket)	4	1/4"			100	100 μm (Strainer)		
			FL	Fractional Tube Fitting	6	3/8" or 6 mm			150	150 μm (Strainer)		
			ML	Metric Tube Fitting	8	1/2" or 8 mm			250	250 μm (Strainer)		
			TS	Fractional Tube Socket Weld	10	10 mm			450	450 μm (Strainer)		
			TB	Fractional Tube Butt Weld	12	3/4" or 12 mm			EL	Without filter element		
			FR	Male FR Fitting								

Note: "Ordering Number Description" is a reference to understand the combination rules of FITOK product part number. Not all combinations are available.

1. Cleaning and Packaging:
   FC-01: Standard cleaning and packaging for basic industrial procedures.
   FC-02: Special cleaning and packaging for wetted system components to ensure compliance requirement as stated in ASTM G93 Level C.
2. Standard thread pitch for metric threads are as follows:
   M10 and below: 1 mm
   M12 to M24: 1.5 mm
   M27 and above: 2 mm
   Standard thread pitch should be ignored in the ordering number, others should be specified.

Elements Ordering Number Description

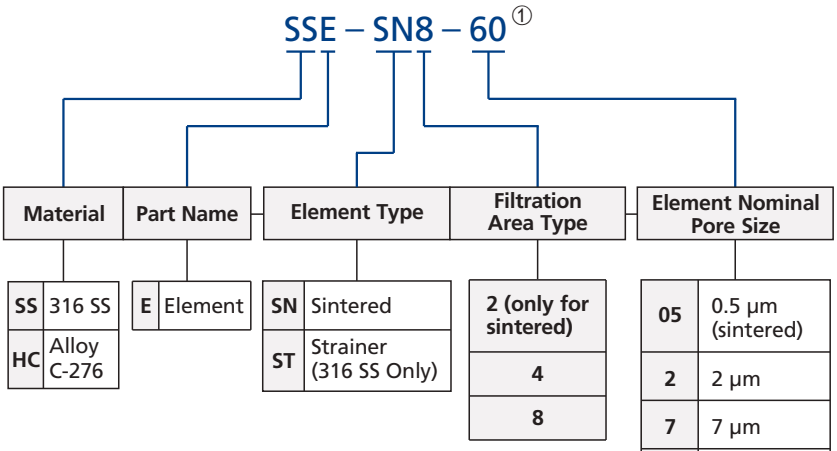

Note: "Ordering Number Description" is a reference to understand the combination rules of FITOK product part number. Not all combinations are available.

① The FT and FB series filters share identical filter element models, while some filter element models for the FI series filters are also same with the FT and FB series. A filter element model represents a single, consistent filter product, meaning one filter element can be used across multiple filter series.

All-Welded In-Line Filters

FW Series

Introduction

All-Welded In-Line Filters are compact-designed to trap particle contaminants in limited space. Body-to-element weld prevents bypass flow. Filter elements can be easily cleaned by back-flushing.



Features

- Full-penetration weld between body and filter element
- Working pressure up to 6000 psig (414 bar)
- Working temperature: -20°F to 900°F (-28°C to 482°C)
- Variety of end connections available

Standard Materials of Construction

Item	Component	Body Material
		316 SS
		Material Grade/ASTM Specification
1	Body	F316 SS/A182
		316 SS/A479
2	Element	Sintered 316 SS or strainer 316 SS

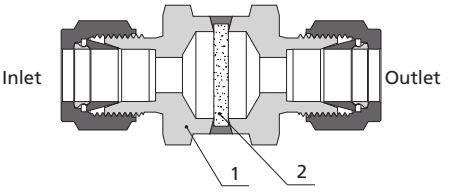

FW Series Sintered Filter Shown

Pressure vs. Temperature

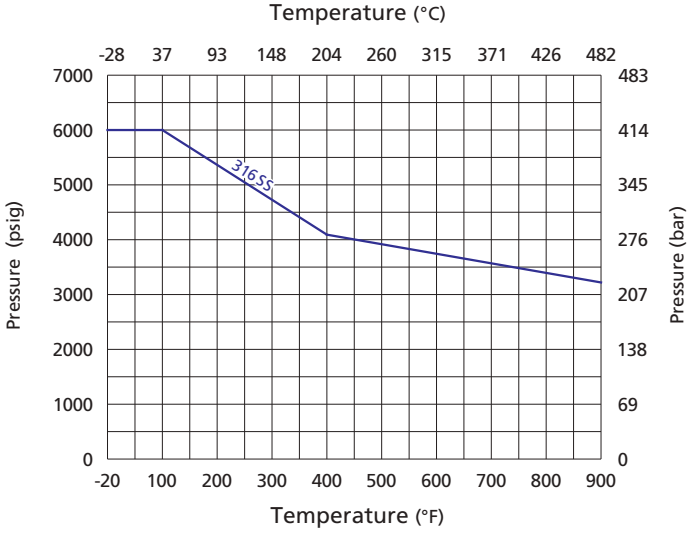

Filter Elements

Sintered

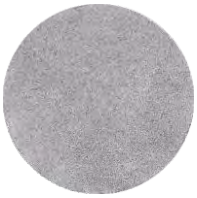

◎ 316 SS powder metallurgy
◎ Sheet-shaped filter cake to trap particles as small as 0.5 μm in diameter

Strainer



Mesh Framework　Filter Element　Mesh Framework

◎ 316 SS wire mesh framework sandwiched filter design
◎ Uniform mesh pores to allow for stable flows

Combination Strainer (Optional)



◎ Multi-layer 316 SS wire meshes overlaid
◎ Uniform mesh pores with high strength to allow for stable flows

Nominal Pore Size of Filter Elements

	Nominal Pore Size	Pore Size Range	Element Designator
Sintered	0.5 μm	0.5 to 2 μm	05
Strainer	2 μm	6250 mesh	2
	7 μm	3500 mesh	7
	15 μm	800 mesh	15

Note: Filter elements remove 95% of particles larger than the nominal pore size.

Filtration Area

Filtration Area Type	Filtration Area, in.^{2} (mm^2)	
	Sintered	Strainer
——	0.39 (254)	0.39 (254)

Note: For FW series, sintered element available only for 0.5 μm nominal pore size, and strainer element option for the other sizes.

Maximum Differential Pressure of Clean Filter at 70°F (20°C)

Maximum Differential Pressure psig (bar)			
0.5 μm	2 μm	7 μm	15 μm
600 (41.4)	100 (6.9)		

Flow Data

Filtration Area Type	Element Nominal Pore Size μm	Element Type	Inlet Pressure, psig (bar)			Pressure Drop, psig (bar)		
			5 (0.34)	10 (0.68)	15 (1.0)	10 (0.68)	50 (3.4)	100 (6.8)
			Air Flow, std ft^3/min (L/min)			Water Flow, U.S. gal/min (L/min)		
-	0.5	Sintered	0.04 (1.1)	0.06 (1.7)	0.12 (3.4)	0.01 (0.03)	0.04 (0.15)	0.12 (0.45)
	2	Strainer/ Combination Strainer	5.6 (150)	10 (280)	14 (390)	1.7 (6.4)	5.5 (20)	8.3 (31)
	7	Strainer/ Combination Strainer				3.5 (13)	11 (41)	14 (52)
	15	Strainer/ Combination Strainer				4.5 (17)	14 (52)	18 (68)

Note: Outlet is discharged to the atmosphere.

Dimensions and Ordering Information

Dimensions, in inches (millimeters), are for reference only.

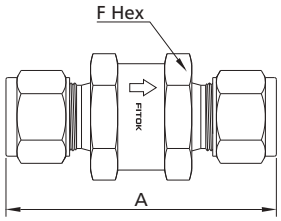

Basic Ordering Number	Connection Type and Size		Dimensions in. (mm)	
	Inlet	Outlet	A	F
FW□□-FL4-	1/4" Tube Fitting	1/4" Tube Fitting	2.15 (54.6)	1 (25.4)
FW□□-ML6-	6 mm Tube Fitting	6 mm Tube Fitting		
FW□□-FNS4-	1/4 Female NPT	1/4 Female NPT	1.57 (39.9)	
FW□□-NS4-	1/4 Male NPT	1/4 Male NPT	1.89 (48.0)	
FW□□-FR4-	1/4 Male FR	1/4 Male FR	2.04 (51.8)	

1. For FW series, sintered element available only for 0.5 µm nominal pore size, and strainer element option for the other nominal pore sizes.
2. FR means metal gasket seal fittings.
3. Sizes and types listed are standard. Other sizes and types are available upon request.
4. Dimensions are shown with FITOK nuts finger-tightened. All dimensions are for reference only and are subject to change. For dimensions not shown above, please contact FITOK Group or our authorized distributors.

Filters Ordering Number Description

FWSS – FL6 – ML10 – S – 15 – SF2

Series

FW

Body Material

SS	316 SS
6L	316L SS
S4	304 SS
4L	304L SS

Inlet Type

FNS	Female NPT
NS	Male NPT
FRT	Female BSPT
RT	Male BSPT
FMS	Female Metric Thread (for RP gasket)
MS	Male Metric Thread (for RG gasket)
FRP	Female BSPP (for RP gasket)
BP	Male BSPP (for RP gasket)
FL	Fractional Tube Fitting
ML	Metric Tube Fitting
TB	Fractional Tube Butt Weld
FR	Male FR Fitting

Outlet Type

	Same as Inlet
Specified in the same way as the inlet type and size	

Outlet Size

2	1/8"
4	1/4"
6	3/8" or 6 mm
8	1/2" or 8 mm
10	10 mm
12	3/4" or 12 mm

Element Type

	Sintered
S	Strainer

Element Nominal Pore Size

05	0.5 µm (Sintered)
2	2 µm (Strainer)
7	7 µm (Strainer)
15	15 µm (Strainer)

Special Application

	None
S	NACE MR0175

Cleaning and Packaging

	FC-01
F2	FC-02

Note: "Ordering Number Description" is a reference to understand the combination rules of FITOK product part number. Not all combinations are available.

1. Cleaning and Packaging:
   FC-01: Standard cleaning and packaging for basic industrial procedures.
   FC-02: Special cleaning and packaging for wetted system components to ensure compliance requirement as stated in ASTM G93 Level C.
2. Standard thread pitch for metric threads are as follows:
   M10 and below: 1 mm
   M12 to M24: 1.5 mm
   M27 and above: 2 mm
   Standard thread pitch should be ignored in the ordering number, others should be specified.

High-Capacity Filters

FH Series



Introduction

FH Series High-Capacity Filters feature a large filtration area, more efficient filtration, stable flow, wide medium compatibility, etc., making them suitable for high-flow pipeline systems.

Features

- ◎ Filtration area type: 4H and 8H
- ◎ Bypass port at filter bottom optional for the ease of sampling or purging
- ◎ Elements equipped with retention levers for easy disassembling, cleaning and replacement
- ◎ FKM O-ring by default
- ◎ Working pressure up to 5000 psig (345 bar)
- ◎ Variety of end connections optional

Standard Materials of Construction

Item	Component	Body Material
		316 SS
		Material Grade/ASTM Specification
1	Body	F316 SS/A182
2	O-ring	FKM/NBR/EPDM/FFKM
3	Backup Ring	PTFE
4	Element	316 SS
5	Gasket	PTFE
6	Bonnet	316 SS/A479
7	Standard Spring Washer	Stainless Steel
8	Hexagon Thin Nut	Stainless Steel
9	Upper Retainer	316 SS/A479
10	Lever	316 SS/A479
11	Lower Retainer	316 SS/A479

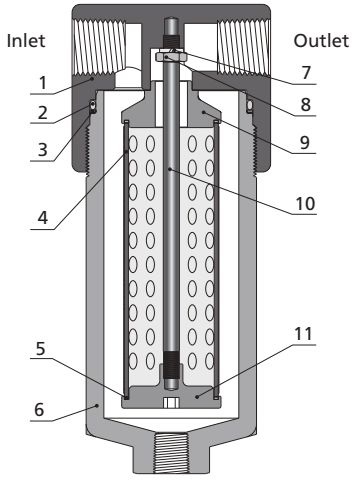

FH Series Strainer Filter Shown

Temperature Range of Sealing Materials

O-ring Material	Temperature Range °F (°C)
FKM	-4 to 400 (-20 to 204)
NBR	-20 to 212 (-28 to 100)
EPDM	-50 to 250 (-45 to 121)
FFKM	30 to 600 (-1 to 315)

Pressure vs. Temperature

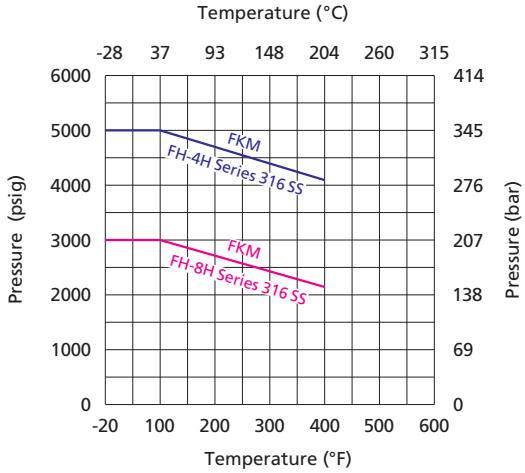

Note: For Pressure vs. Temperature curves for other seal materials listed above, please contact FITOK or our authorized distributors.

Filter Elements

Strainer (25 μm)



Strainer (150 μm)



◎ 316 SS wire meshes and metal framework
◎ Uniform mesh pores to provide larger filtration area and more stable flows

Nominal Pore Size of Filter Elements

	Nominal Pore Size	Pore Size Range	Element Designator
Strainer	25 μm	500 mesh	25
	100 μm	140 mesh	100
	150 μm	100 mesh	150
	250 μm	60 mesh	250
	450 μm	40 mesh	450

Note: Filter elements remove 95% of particles larger than the nominal pore size.

Filtration Area

Filtration Area Type	Filtration Area, in.^{2} (mm^2)
	Strainer
4H	10.70 (6908)
8H	17.02 (10980)

Note: Strainer element available for FH series, and sintered or non-metallic element optional upon customers' requests.

Maximum Differential Pressure of Clean Filter at 70°F (20°C)

Maximum Differential Pressure psig (bar)				
25 µm	100 µm	150 µm	250 µm	450 µm
		1000 (69.0)		

Flow Data

Filtration Area Type	Element Nominal Pore Size µm	Element Type	Inlet Pressure, psig (bar)		
			2 (0.14)	5 (0.34)	8 (0.55)
			Air Flow, std m^3/h		
4H	25, 100, 150, 250, 450	Strainer	5	8.3	10.4
8H	25, 100, 150, 250, 450	Strainer	8.4	14	18.9

Note: Outlet is discharged to the atmosphere.

Dimensions and Ordering Information

Dimensions, in inches (millimeters), are for reference only.

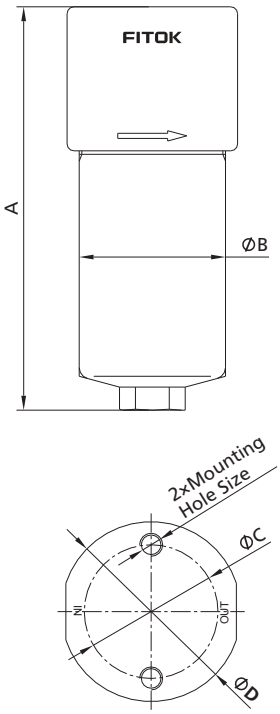

Basic Ordering Number	Connection Type and Size		Filtration Area Type	Dimensions in. (mm)				
	Inlet	Outlet		A	ØB	ØC	ØD	Mounting Hole Size
FH□□-FNS4-S-□□	1/4 Female NPT	1/4 Female NPT	4H	2.29 (58.2)	1.61 (41)	1.95 (49.5)	1.94 (49.4)	M8 × 1 - 6H threads 0.47" (12 mm) deep, pores 0.63" (16 mm) deep
FH□□-FRT4-S-□□	1/4 Female BSPT	1/4 Female BSPT						
FH□□-FRP4-S-□□	1/4 Female BSPP	1/4 Female BSPP						
FH□□-FNS6-S-□□	3/8 Female NPT	3/8 Female NPT	8H	6.89 (175)	2.5 (63.5)	2.28 (58)	3.07 (78)	M10 × 1.5 - 6H threads 0.59" (15 mm) deep, pores 0.71" (18 mm) deep
FH□□-FRT6-S-□□	3/8 Female BSPT	3/8 Female BSPT						
FH□□-FRP6-S-□□	3/8 Female BSPP	3/8 Female BSPP						
FH□□-FNS8-S-□□	1/2 Female NPT	1/2 Female NPT		6.89 (175)	2.5 (63.5)	2.28 (58)	3.07 (78)	M10 × 1.5 - 6H threads 0.59" (15 mm) deep, pores 0.71" (18 mm) deep
FH□□-FRT8-S-□□	1/2 Female BSPT	1/2 Female BSPT						
FH□□-FRP8-S-□□	1/2 Female BSPP	1/2 Female BSPP						

Filters Ordering Number Description

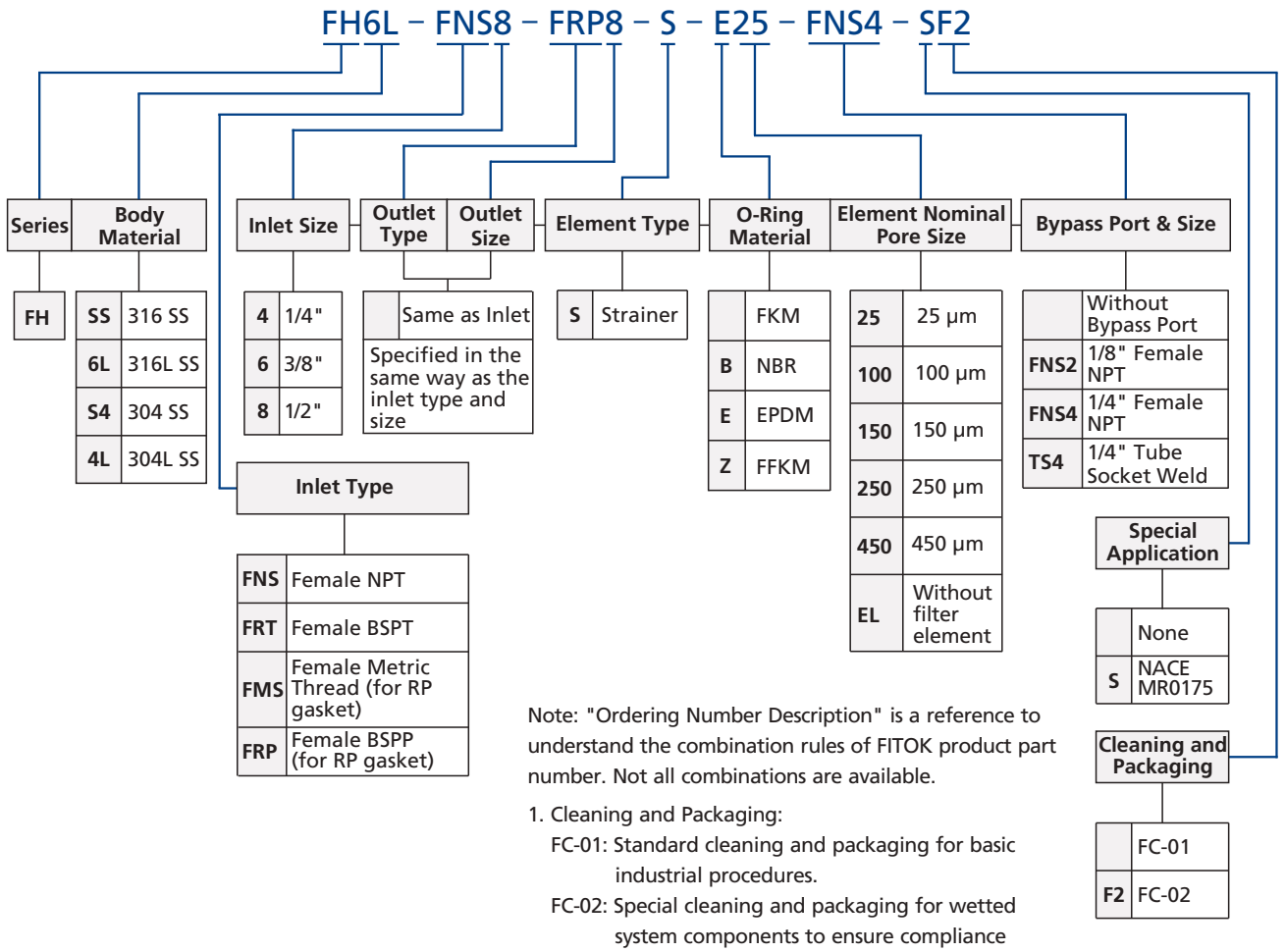

Note: "Ordering Number Description" is a reference to understand the combination rules of FITOK product part number. Not all combinations are available.

1. Cleaning and Packaging:
   FC-01: Standard cleaning and packaging for basic industrial procedures.
   FC-02: Special cleaning and packaging for wetted system components to ensure compliance requirement as stated in ASTM G93 Level C.

Elements Ordering Number Description

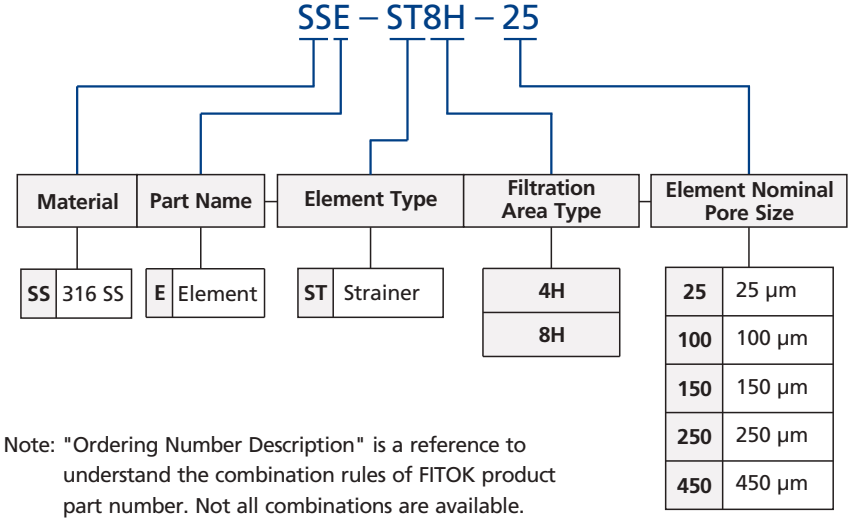

Note: "Ordering Number Description" is a reference to understand the combination rules of FITOK product part number. Not all combinations are available.

Manifolds

Gauge Valves and Instrumentation Manifolds  C-02

Block and Bleed Valves  C-26

Gauge Valves and Instrumentation Manifolds

GV, GVH, GR Series
2D, 2R, 2DH, 2RH Series 2-valve Manifolds
3D, 3R, 3DH, 3RH Series 3-valve Manifolds
5D, 5R, 5DH, 5RH Series 5-valve Manifolds

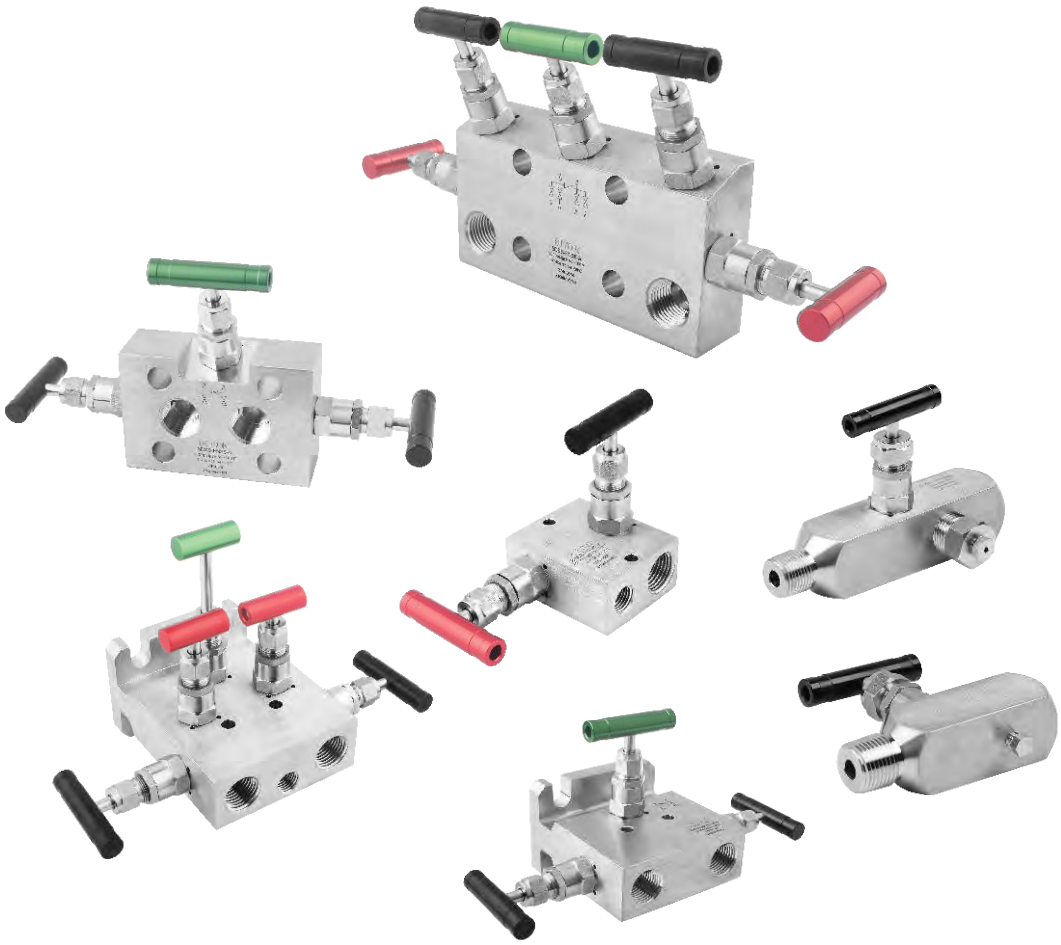

Contents

Gauge Valves

Features C-04

Standard Materials of Construction C-04

Pressure vs. Temperature C-05

Types and Dimensions C-06

Standard Type C-06

Lagging Extension Body Type C-06

Miniature Type C-06

Instrumentation Manifolds

Features C-08

Standard Materials of Construction C-08

Pressure vs. Temperature C-09

Design Standards C-09

Manifolds Mounting Application C-10

Types and Dimensions C-12

Remote Mount Manifolds C-12

Direct Mount Manifolds (transmitter with coplanar mounting flange) C-17

Direct Mount Manifolds (transmitter with traditional flange) C-18

Direct Mount Manifolds (transmitter without flange) C-23

Accessories

Manifold Mounting Bracket Kit C-24

Kidney Flanges and Eccentric Flanges C-25

Notes:

◎ Packing may need to be adjusted during valve use.

◎ For better maintenance, FITOK gauge valves and instrumentation manifolds should be stored in the half-open position.

Gauge Valves

GV Series, GVH Series and GR Series

Features



- Working pressure (stainless steel):
  GV, GR series up to 6000 psig (414 bar)
  GVH series up to 10000 psig (690 bar)
- Working temperature:
  PTFE packing: -65°F to 450°F (-54°C to 232°C)
  Graphite packing: -65°F to 1200°F (-54°C to 649°C)
  Acetal seat: -20°F to 250°F (-28°C to 121°C)
  PEEK seat: -65°F to 450°F (-54°C to 232°C)
- Orifice: GV and GVH Series: 0.157" (4.0 mm)
  GR Series: 0.25" (6.4 mm)
- Non-rotating lower stem, GV/GVH series lower stem ball tip design, GR series lower stem plug tip design
- Safety back seating seals in fully open position
- Rolled spindle operating threads
- Lubricant for stem thread isolated from the media
- Externally adjustable gland
- Bonnet locking pin fitted as standard
- Option for different colored handles
- Every gauge valve leak tested at factory at rated working pressure

Standard Materials of Construction

Item	Component	Material Grade/ASTM Specification
1	Handle	Aluminum alloy
2	Set Screw	Zinc-plated carbon steel
3	Packing Bolt	304 SS/A479
4	Upper Stem	316 SS/A479
5	Lock Nut	Stainless steel
6	*Bonnet*	*316 SS/A479*
7	Gland	316 SS/A479
8	*Packing*	*PTFE or graphite*
9	Lock Pin	Stainless steel
10	*Lower Stem*	*Hardened 316 SS/A479*
11	*Body*	*316 SS/A479 316 SS/A182*
12	*Seat*	*Acetal or PEEK (GR series only)*
	Lubricant	*Molybdenum disulfide-based*

Note: Wetted components are listed in italics.

Ball Tip Design Valves (GV, GVH)

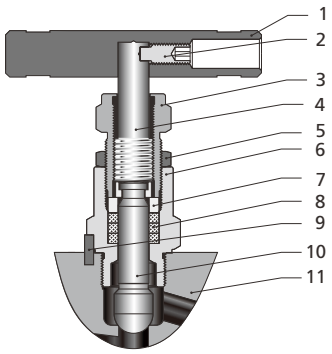

Plug Tip Design Valves (GR)

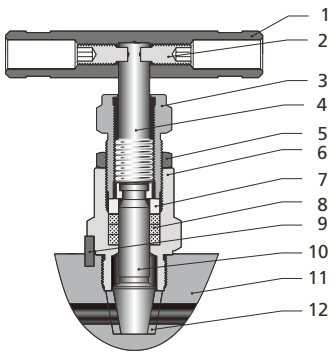

Pressure vs. Temperature

GV Series

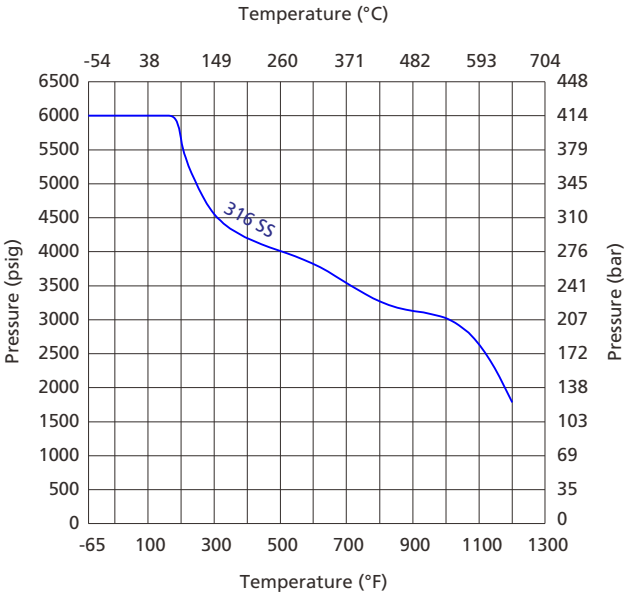

GVH Series

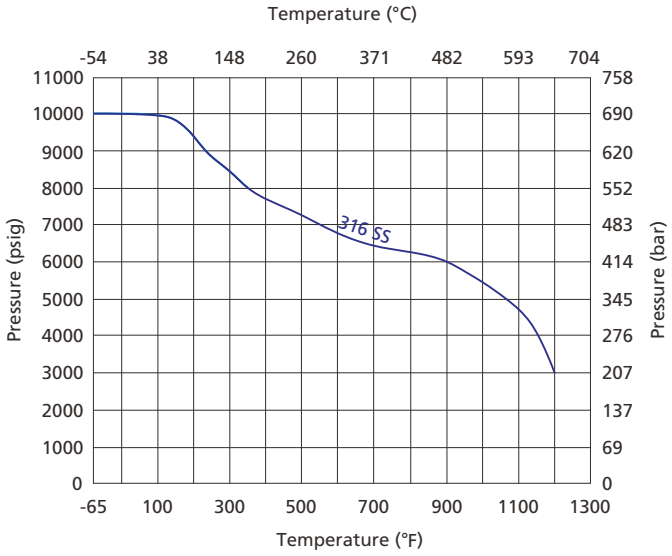

GR Series

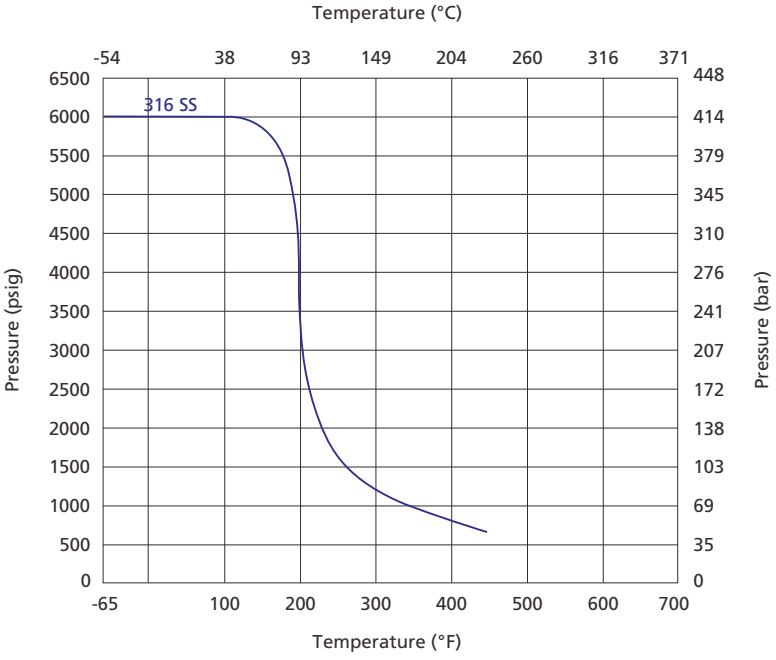

1. GV, GVH series are based on graphite packing.
2. GR series are based on PEEK seat and PTFE packing.
3. Contact FITOK Group or our authorized distributors for curve graph of GR series with Acetal seat.

Types and Dimensions

Standard Type

Basic Ordering Number	Process	Instrument	Vent & Test
GV☐☐-NS8-FNS8	1/2 Male NPT	1/2 Female NPT	1/2 Female NPT (Bleed Valve with Plug)
GVH☐☐-NS8-FNS8			
GR ☐☐-NS8-FNS8			
GV ☐☐-NS12-FNS8	3/4 Male NPT		
GVH☐☐-NS12-FNS8			
GR ☐☐-NS12-FNS8			

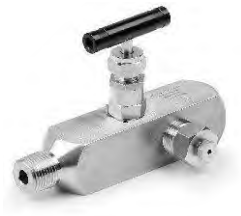

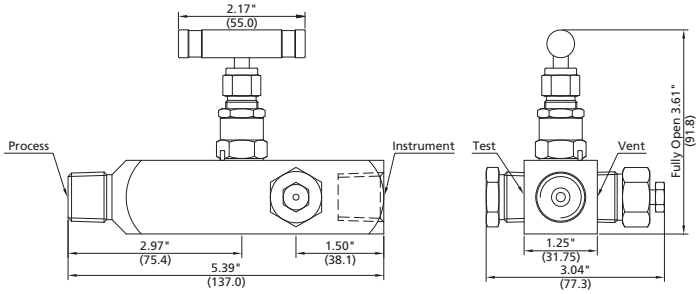

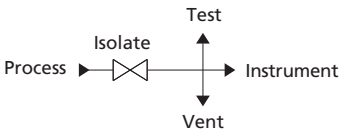

Lagging Extension Body Type

Basic Ordering Number	Process	Instrument	Vent & Test
GV☐☐-NS8-FNS8-E	1/2 Male NPT	1/2 Female NPT	1/2 Female NPT (Bleed Valve with Plug)
GVH☐☐-NS8-FNS8-E			
GR ☐☐-NS8-FNS8-E			



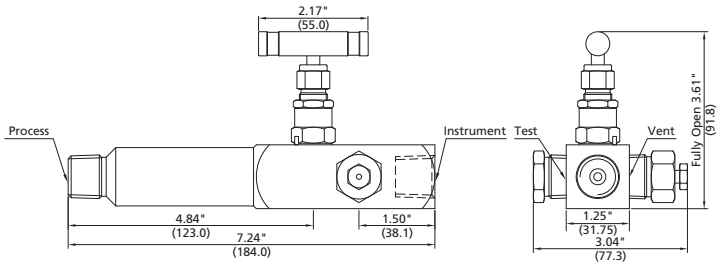

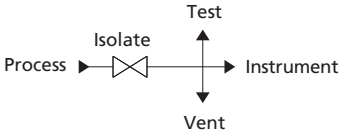

Lagging extension body is inserted through pipe insulation.

Miniature Type

Basic Ordering Number	Process	Instrument	Vent
GV☐☐-NS8-FNS8-C	1/2 Male NPT	1/2 Female NPT	Vent stem
GVH☐☐-NS8-FNS8-C			
GR ☐☐-NS8-FNS8-C			



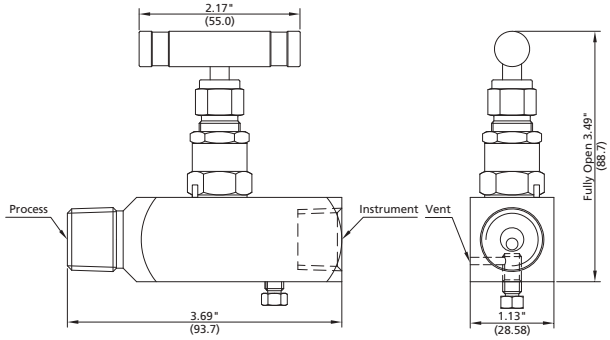

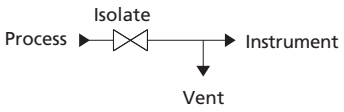

The dimensions shown are for GV series gauge valves. If you need the dimensions of GVH, GR series, please contact FITOK Group or our authorized distributors.

Ordering Number Description

GRSS – NS8 – FNS8 – CPW – GR – SF2

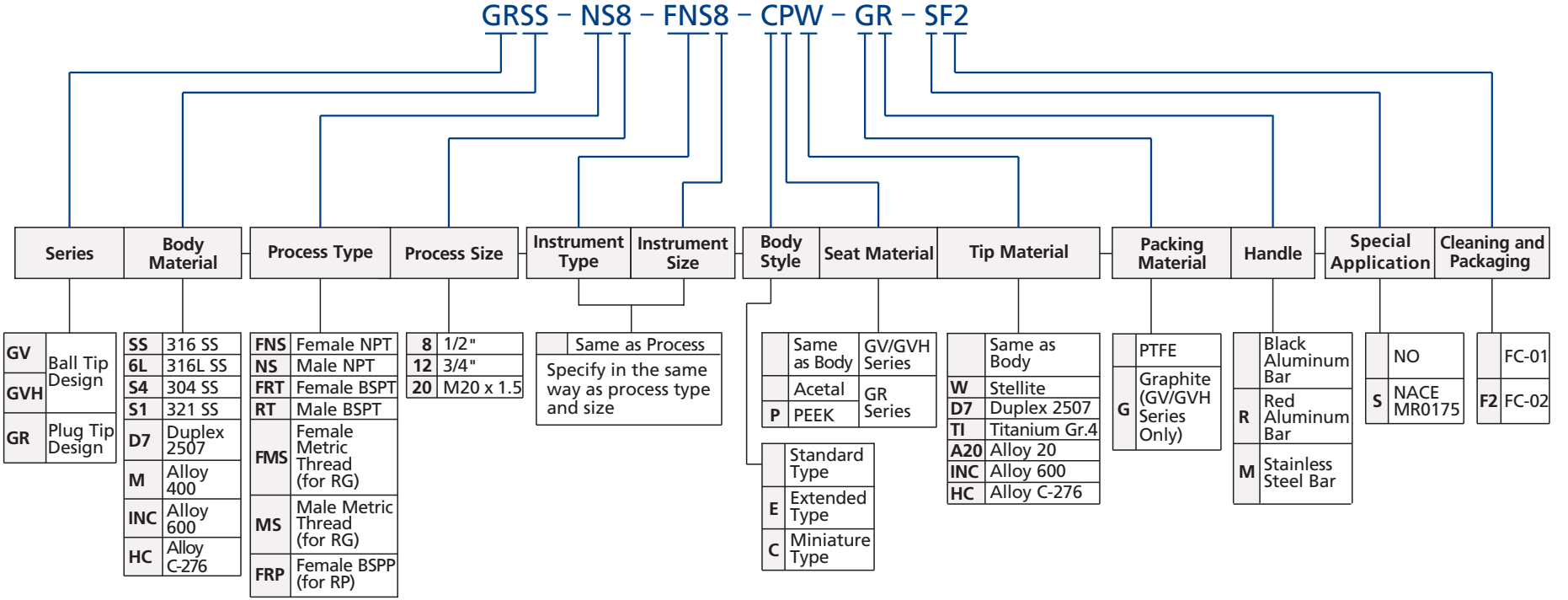

Notes:

1. Cleaning and Packaging:

FC-01: Standard cleaning and packaging for general industrial procedures.

FC-02: Special cleaning and packaging for wetted system components to ensure compliance with product cleanliness requirement as stated in ASTM G93 Level C.

2. "Ordering Number Description" is a reference to understand the combination rules of FITOK product part number. Not all combinations are available. If you have any questions, please contact FITOK Group or our authorized distributors.

Instrumentation Manifolds

Features

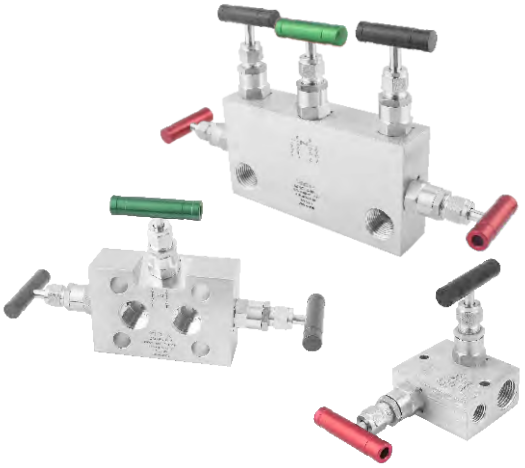

- Working pressure:
  2D, 2R, 3D, 3R, 5D, 5R series up to 6000 psig (414 bar)
  2DH, 2RH, 3DH, 3RH, 5DH, 5RH series up to 10000 psig (690 bar)
- Working temperature:
  PTFE packing: -65°F to 450°F (-54°C to 232°C)
  Graphite packing: -65°F to 1200°F (-54°C to 649°C)
- Orifice: 0.157" (4.0 mm)
- Two-piece stem design: Upper stem threads cold rolled and lower stem hardened for high strength and smooth operation
- Upper stem thread lubricant isolated from system media
- Linear instead of rotary motion of the rising, non-rotating stem minimizes packing abrasion and reduces the friction between the seat and the tip
- Safety back seating seals in fully open position
- Steady and durable fastening of the handle by handle set screw
- Every manifold leak tested at factory at rated working pressure

Standard Materials of Construction

Item	Component	Valve Body Material	
		316 SS	Alloy C-276
		Material Grade/ASTM Specification	
1	Handle	Aluminum alloy	
2	Set Screw	Zinc-plated carbon steel	
3	Packing Bolt	304 SS/A479	
4	Upper Stem	316 SS/A479	
5	Lock Nut	Stainless steel	
6	*Bonnet*	*316 SS/A479*	*Alloy C-276/B574*
7	Gland	316 SS/A479	
8	*Packing*	*PTFE or Graphite*	
9	Lock Pin	Stainless steel	
10	*Lower Stem*	*Hardened 316 SS/A479*	*Alloy C-276/B574*
11	*Body*	*316 SS/A479 316 SS/A182*	*Alloy C-276/B564*
	Lubricant	*Molybdenum disulfide-based*	

Note: Wetted components are listed in italics.

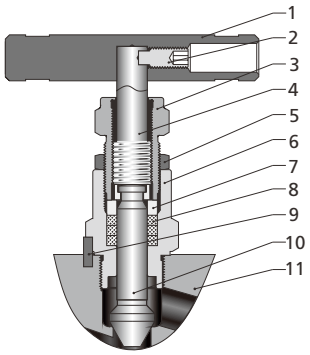

Handle colors indicate function:
BLACK=Isolate
RED=Vent
GREEN=Equalize

Pressure vs. Temperature

2D, 2R, 3D, 3R, 5D, 5R Series

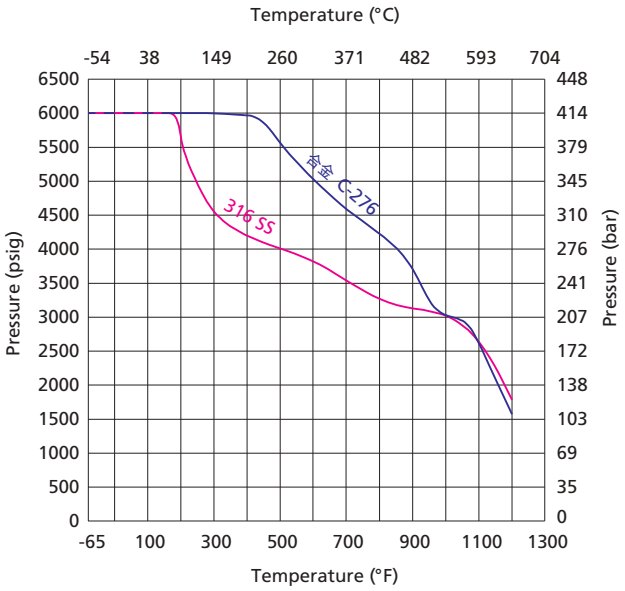

2DH, 2RH, 3DH, 3RH, 5DH, 5RH Series

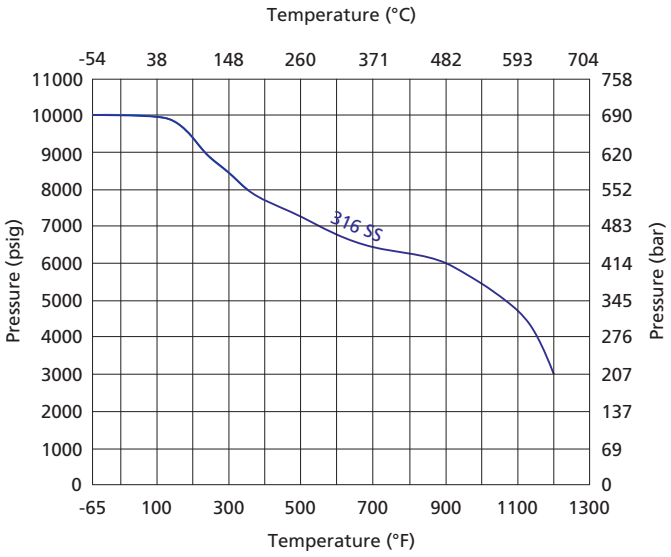

1. Based on graphite packing.
2. Contact FITOK Group or our authorized distributors for curve graph of other materials.

Design Standards

◎ Flanges in compliance with MSS SP-99 or IEC 61518 are available. Dimensions are as follows.

MSS SP-99

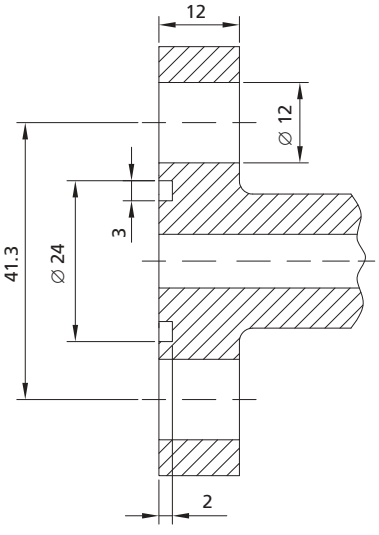

IEC 61518, Type A

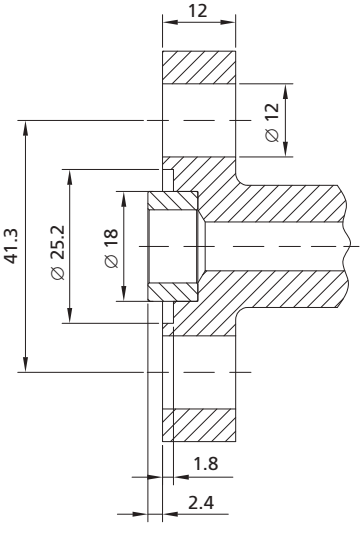

IEC 61518、Type B

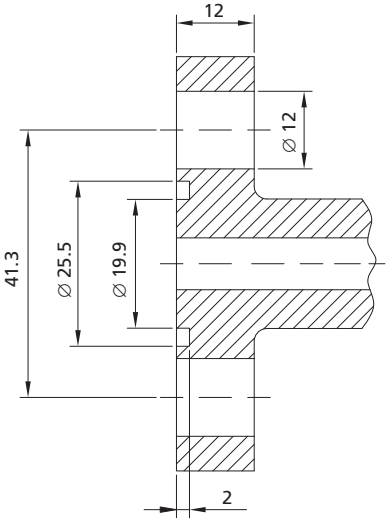

Manifolds Mounting Application

◎ Remote Mount Manifolds (with transmitter)
For 2R, 2RH, 3R, 3RH, 5R, 5RH series manifolds

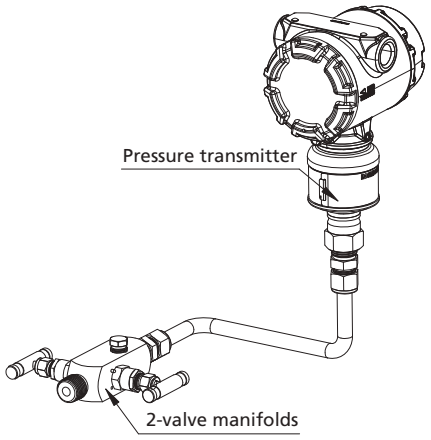

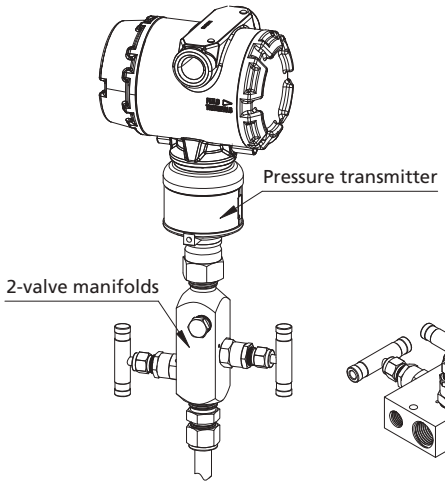

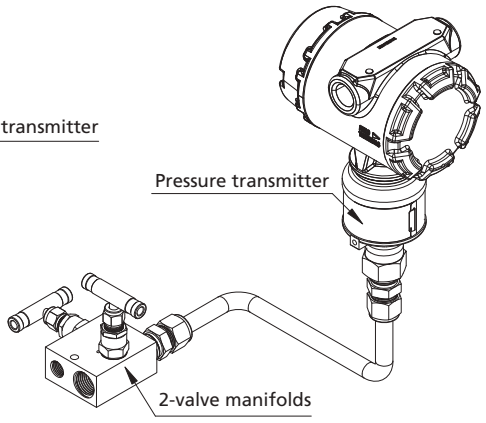

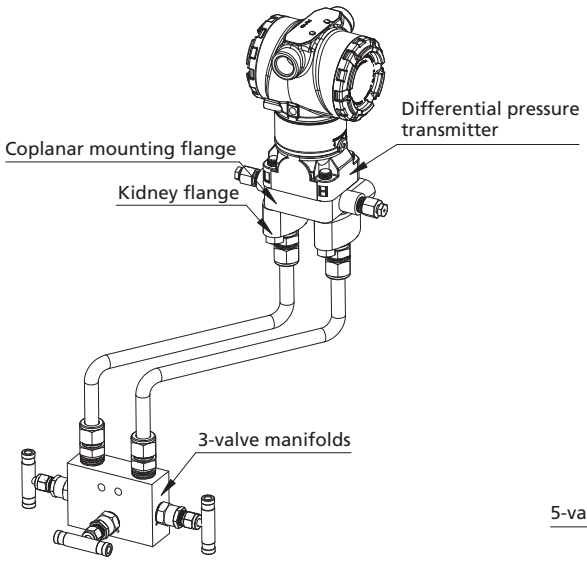

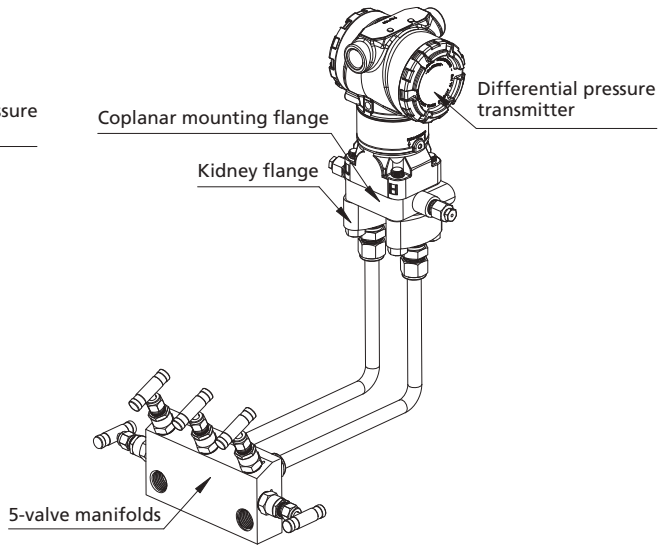

◎ Direct Mount Manifolds (transmitter with coplanar mounting flange)
For 2D, 2DH, 3D, 3DH, 5D, 5DH series layout type A and type L manifolds

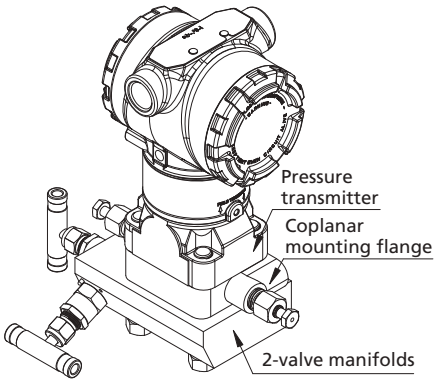

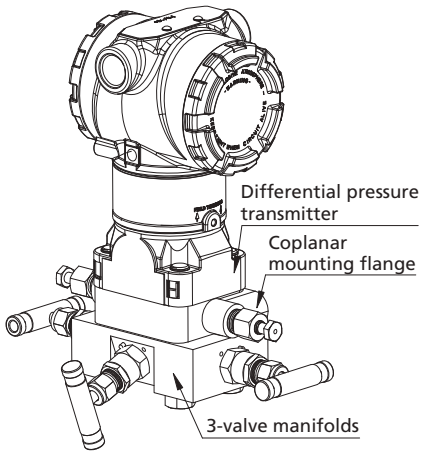

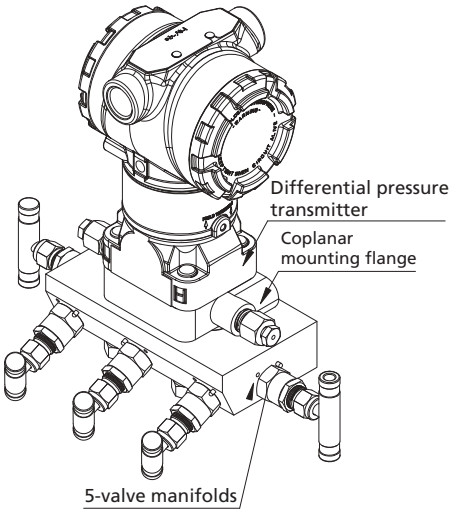

◎ Direct Mount Manifolds (transmitter with traditional flange)
For 2D, 2DH, 3D, 3DH, 5D, 5DH series layout type V manifolds

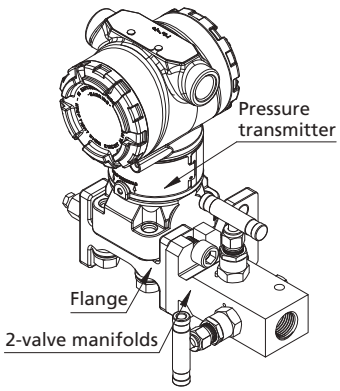

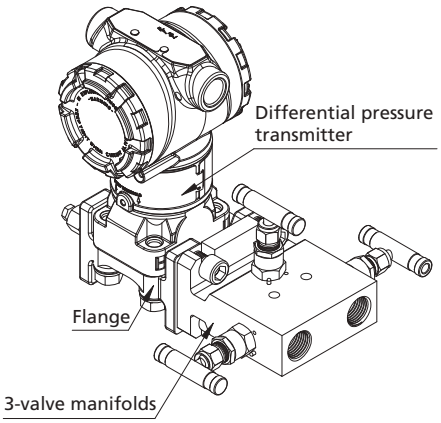

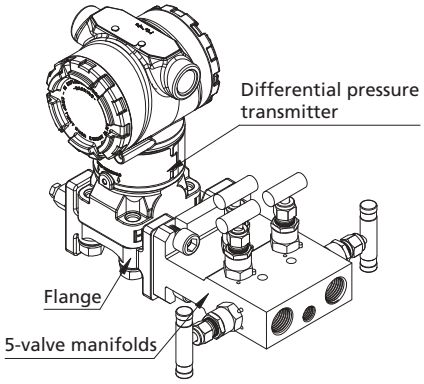

◎ Direct Mount Manifolds (transmitter without flange)
For integrated mount 2DSS-FNS8-C, 3DSS-FNS8-C-T, 5DSS-FNS8-C manifolds only

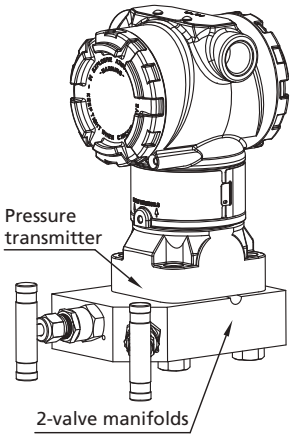

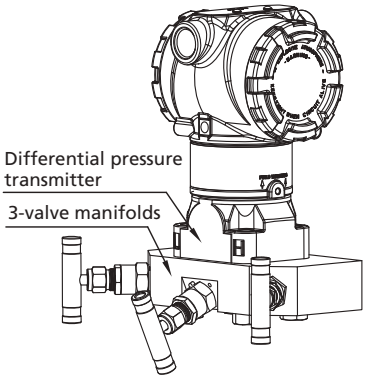

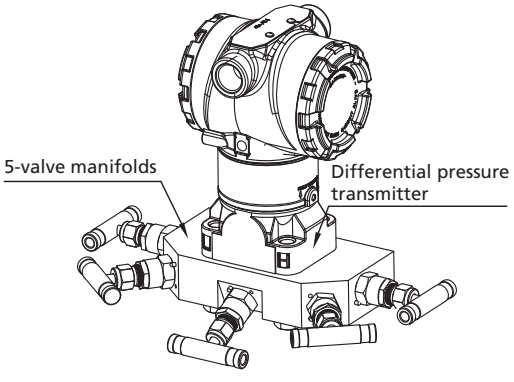

Types and Dimensions

Remote Mount Manifolds

◎ 2-valve manifolds

Basic Ordering Number	Process	Instrument	Vent
2R□□-FNS8-NS8-H	1/2 Female NPT	1/2 Male NPT	1/4 Female NPT
2RH□□-FNS8-NS8-H			
2R□□-NS8-H	1/2 Male NPT		
2RH□□-NS8-H			
2R□□-NS8-H-P			1/4 Female NPT with plug



2R□□-FNS8-NS8-H

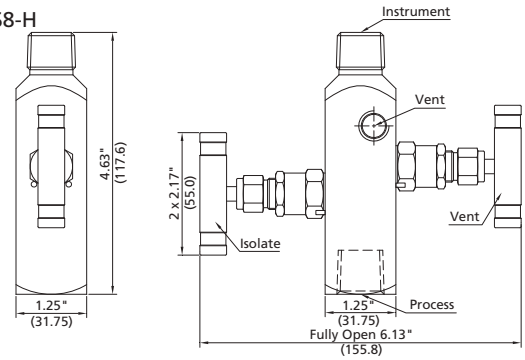

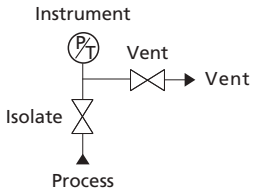

The dimensions shown are for 2R series manifolds. If you need the dimensions of 2RH series, please contact FITOK Group or our authorized distributors.

Basic Ordering Number	Process	Instrument	Vent
2R□□-FNS8-L	1/2 Female NPT	1/2 Female NPT	1/4 Female NPT
2R□□-FNS8-L-P			1/4 Female NPT with Plug
2R□□-NFL8-L	1/2"Female FITOK Tube Fitting	1/2"Female FITOK Tube Fitting	1/4"Female FITOK Tube Fitting



2R□□-FNS8-L

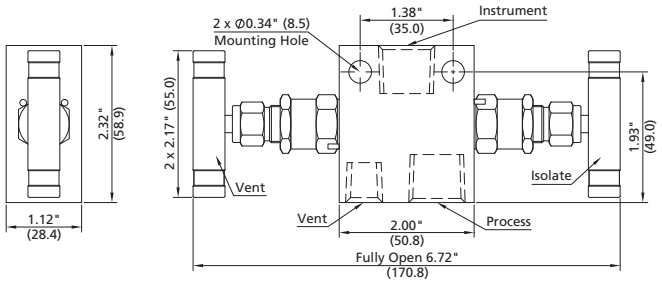

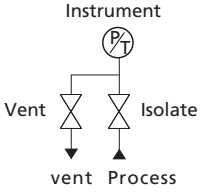

2R□□-NFL8-L

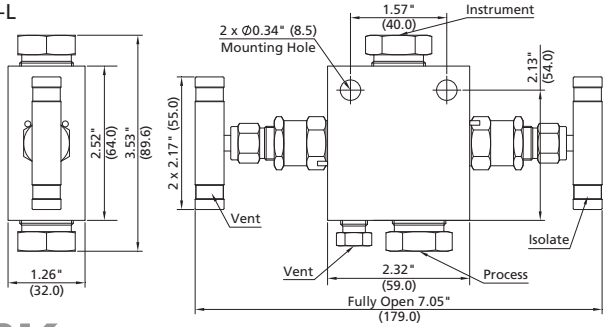

Basic Ordering Number	Process	Instrument	Vent
2R□□-FNS8-V	1/2 Female NPT	1/2 Female NPT	1/4 Female NPT
2R□□-FNS8-V-P			1/4 Female NPT with Plug
2R□□-NFL8-V	1/2"Female FITOK Tube Fitting	1/2"Female FITOK Tube Fitting	1/4"Female FITOK Tube Fitting



2R□□-FNS8-V

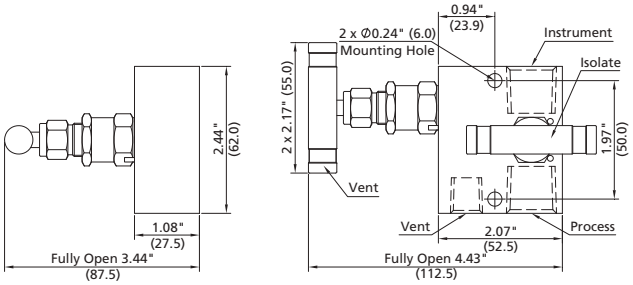

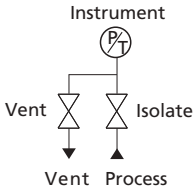

2R□□-NFL8-V

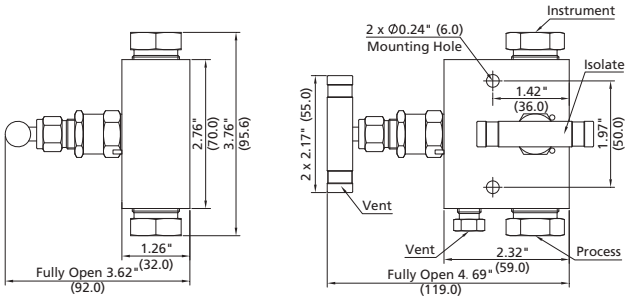

◎ 3-valve manifolds

Basic Ordering Number	Process	Instrument	Vent
3R□□-FNS8-V	1/2 Female NPT	1/2 Female NPT	-
3RH□□-FNS8-V-P			1/4 Female NPT with Plug
3RH□□-FNS8-V			-
3R□□-NFL8-V	1/2"Female FITOK Tube Fitting	1/2"Female FITOK Tube Fitting	

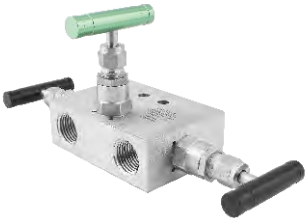

3R□□-FNS8-V-P

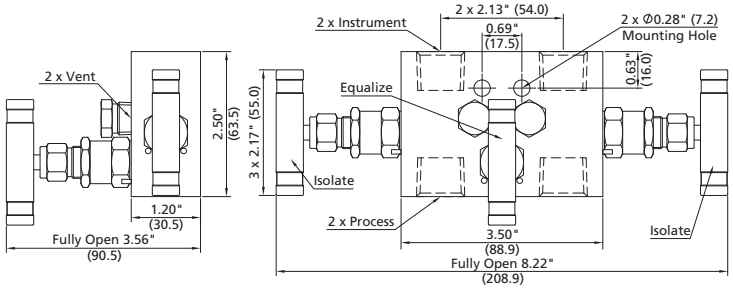

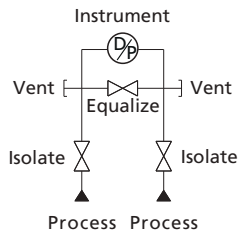

The dimensions shown are for 3R series manifolds. If you need the dimensions of 3RH series, please contact FITOK Group or our authorized distributors.

3R□□-NFL8-V

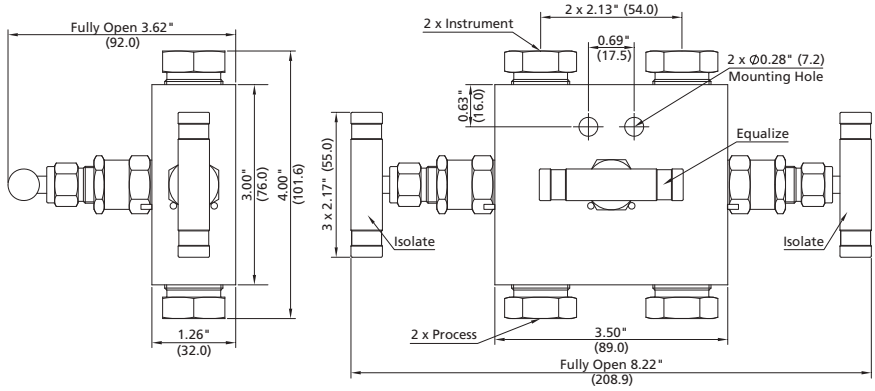

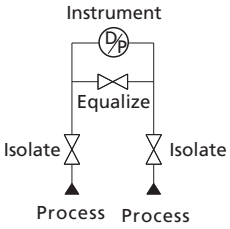

◎ 5-valve manifolds

Basic Ordering Number	Process	Instrument	Vent
5R □□-FNS8-V	1/2 Female NPT	1/2 Female NPT	1/4 Female NPT
5R□□-FNS8-V-P			1/4 Female NPT with Plug
5R□□-NFL8-V	1/2"Female FITOK Tube Fitting	1/2"Female FITOK Tube Fitting	1/4 Female NPT



5R □□-FNS8-V

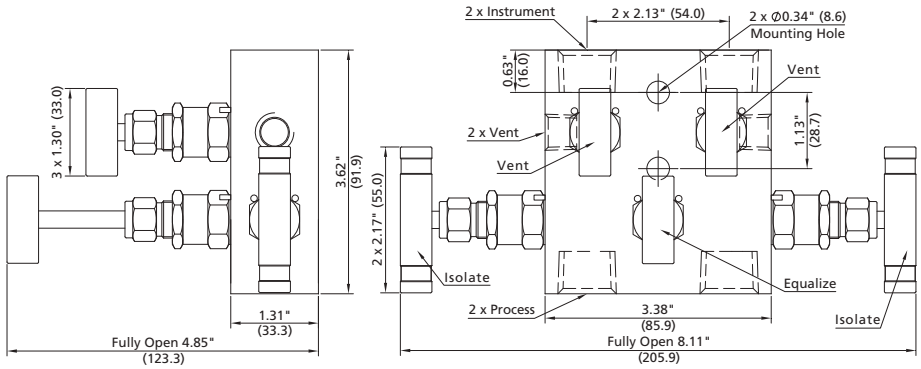

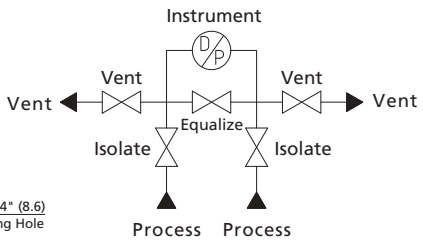

5R□□-NFL8-V

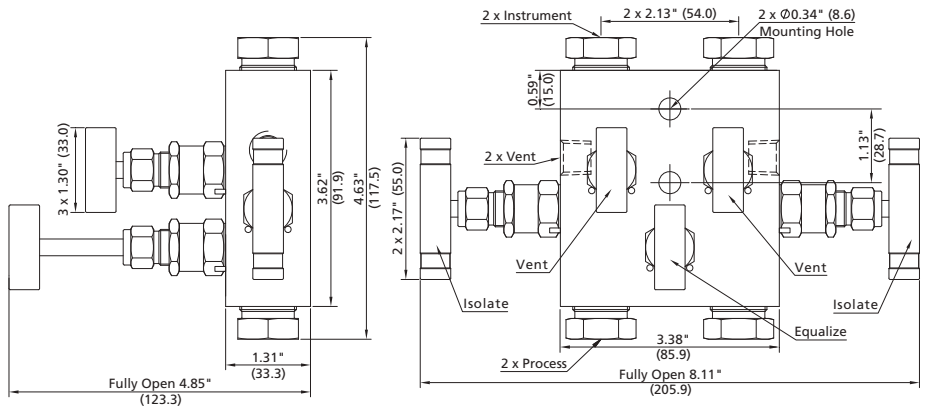

Basic Ordering Number	Process	Instrument	Vent	Test
5R□□-FNS8-VB	1/2 Female NPT	1/2 Female NPT	1/4 Female NPT	–
5R□□-FNS8-VB-P			1/4 Female NPT with Plug	
5R□□-FNS8-VB-E			1/4 Female NPT	1/4 Female NPT with Plug

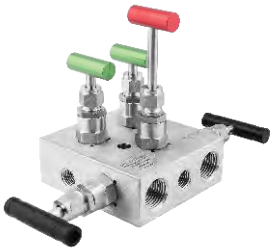

5R□□-FNS8-VB-E

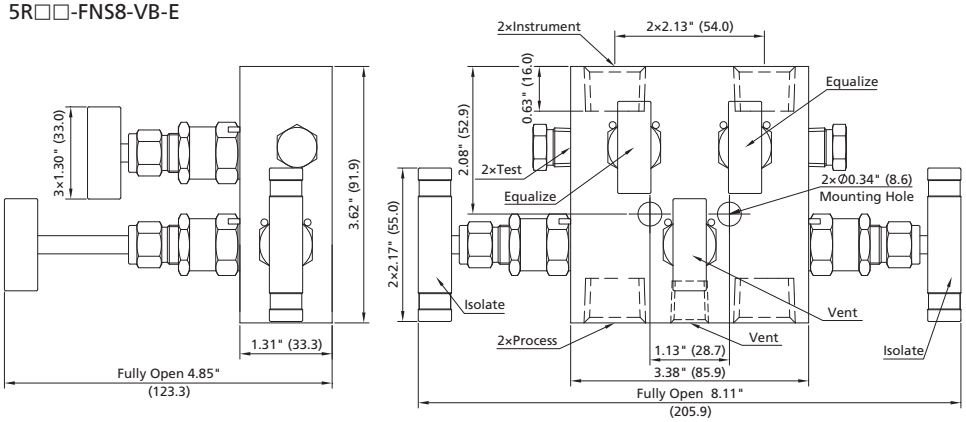

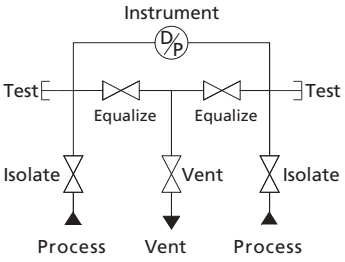

Basic Ordering Number	Process	Instrument	Vent
5R□□-FNS8-L	1/2 Female NPT	1/2 Female NPT	1/4 Female NPT
5R□□-FNS8-L-P			1/4 Female NPT with Plug
5RH□□-FNS8-L			1/4 Female NPT



5R□□-FNS8-L

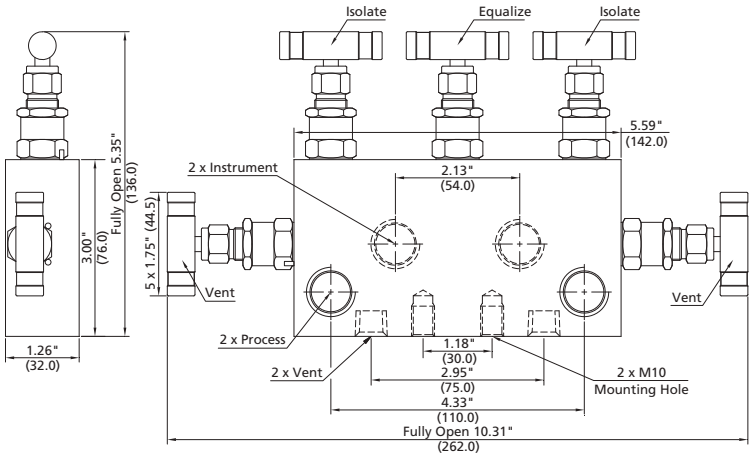

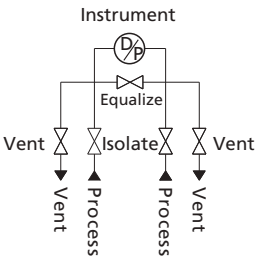

The dimensions shown are for 5R series manifolds. If you need the dimensions of 5RH series, please contact FITOK Group or our authorized distributors.

Ordering Number Description

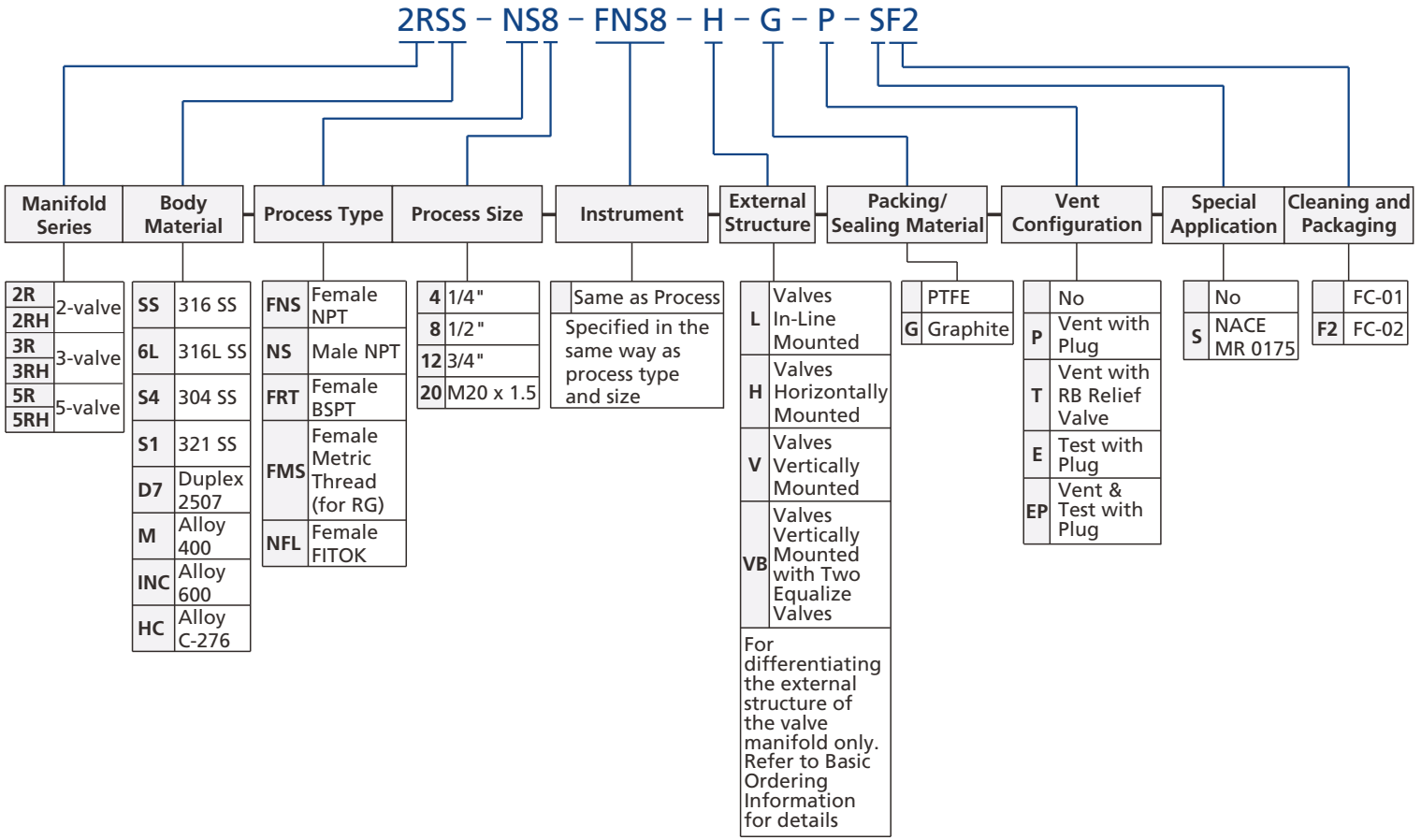

Notes:
1. Cleaning and Packaging:
   FC-01: Standard cleaning and packaging for general industrial procedures.
   FC-02: Special cleaning and packaging for wetted system components to ensure compliance with product cleanliness requirement as stated in ASTM G93 Level C.
2. "Ordering Number Description" is a reference to understand the combination rules of FITOK product part number. Not all combinations are available, If you have any questions, please contact FITOK Group or our authorised distributors.

Direct Mount Manifolds (transmitter with coplanar mounting flange)

This type of manifolds is designed for Rosemount® coplanar™ pressure transmitter. Manifolds for other companies' transmitters , please contact FITOK Group or our authorized distributors.

◎ 2-valve Manifolds

Basic Ordering Number	Process	Instrument	Vent
2D□□-FNS8-A	1/2 Female NPT	MSS SP-99 Flange	1/4 Female NPT
2D□□-FNS8-A-P			1/4 Female NPT with Plug
2DH□□-FNS8-A			1/4 Female NPT



2D□□-FNS8-A

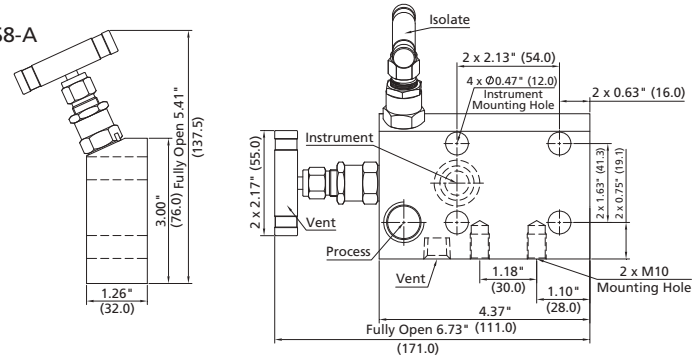

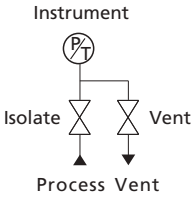

Every manifold is supplied with one PTFE sealing ring for manifold-to-instrument and four 7/16" UNF x 1.75" high tensile bolts. Dimensions shown are for 2D Series manifolds. For dimensions of 2DH Series manifolds, please contact FITOK Group or our authorized distributors.

◎ 3-valve Manifolds

Basic Ordering Number	Process	Instrument	Vent
3D□□-FNS8-A	1/2 Female NPT	MSS SP-99 Flange	-
3D□□-FNS8-A-P			1/4 Female NPT with Plug
3DH□□-FNS8-A			-



3D□□-FNS8-A

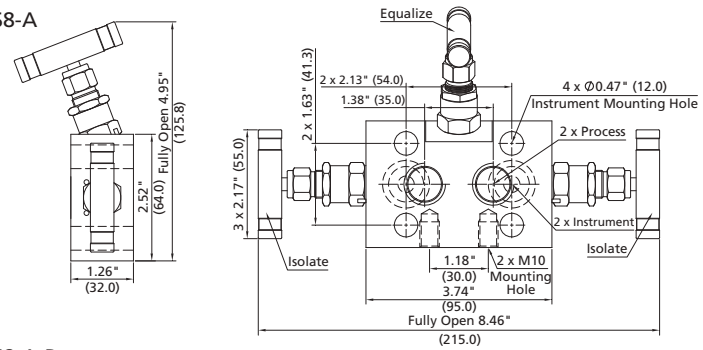

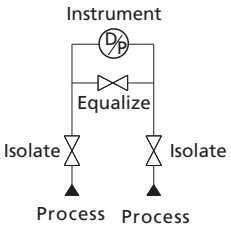

3D□□-FNS8-A-P

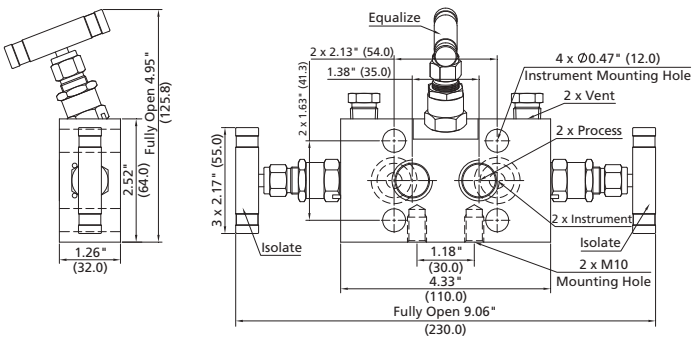

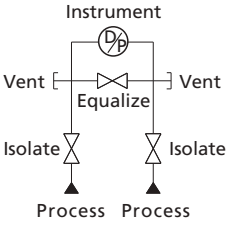

Every manifold is supplied with two PTFE sealing rings for manifold-to-instrument and four 7/16" UNF x 1.75" high tensile bolts. Dimensions shown are for 3D Series manifolds. For dimensions of 3DH Series manifolds, please contact FITOK Group or our authorized distributors.

◎ 5-valve Manifolds

Basic Ordering Number	Process	Instrument	Vent
5D□□-FNS8-A	1/2 Female NPT	MSS SP-99 Flange	1/4 Female NPT
5D□□-FNS8-A-P			1/4 Female NPT with Plug
5DH□□-FNS8-A			1/4 Female NPT

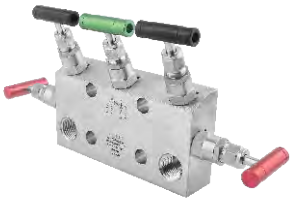

5D□□-FNS8-A

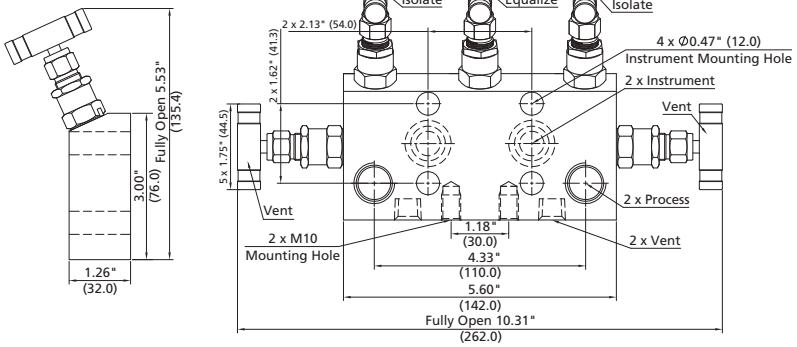

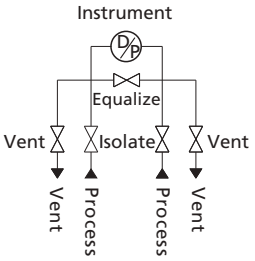

Every manifold is supplied with two PTFE sealing rings for manifold-to-instrument and four 7/16" UNF x 1.75" high tensile bolts. Dimensions shown are for 5D Series manifolds. For dimensions of 5DH Series manifolds, please contact FITOK Group or our authorized distributors.

Direct Mount Manifolds (transmitter with traditional flange)

◎ 2-valve Manifolds

Basic Ordering Number	Process	Instrument	Vent
2D□□-FNS8-V	1/2 Female NPT	MSS SP-99 Flange	1/4 Female NPT
2D□□-FNS8-V-P			1/4 Female NPT with Plug
2D□□-NFL8-V	1/2"Female FITOK Tube Fitting		1/4 Female NPT



2D□□-FNS8-V

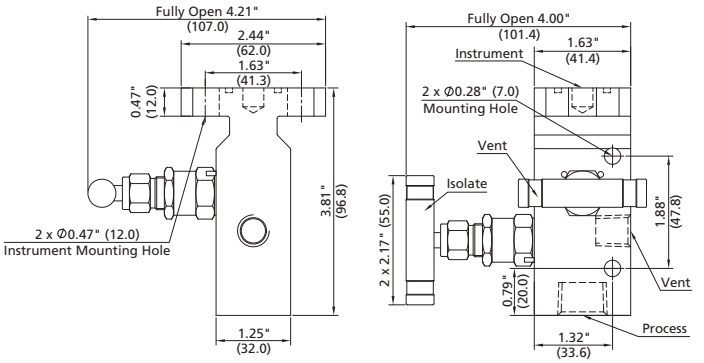

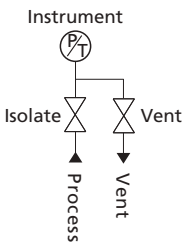

2D□□-NFL8-V

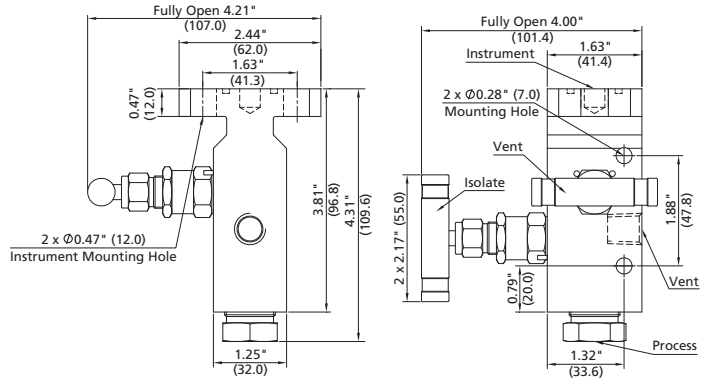

Every manifold is supplied with one PTFE sealing ring for manifold-to-instrument and two 7/16" UNF x 24mm high tensile bolts.

◎ 3-valve Manifolds

Basic Ordering Number	Process	Instrument	Vent
3D□□-FNS8-V	1/2 Female NPT	MSS SP-99 Flange	-
3D□□-FNS8-V-P			1/4 Female NPT with Plug
3D□□-NFL8-V	1/2"Female FITOK Tube Fitting		-

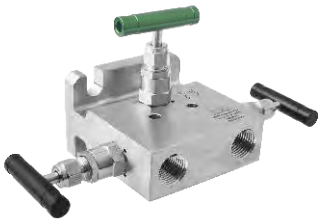

3D□□-FNS8-V-P

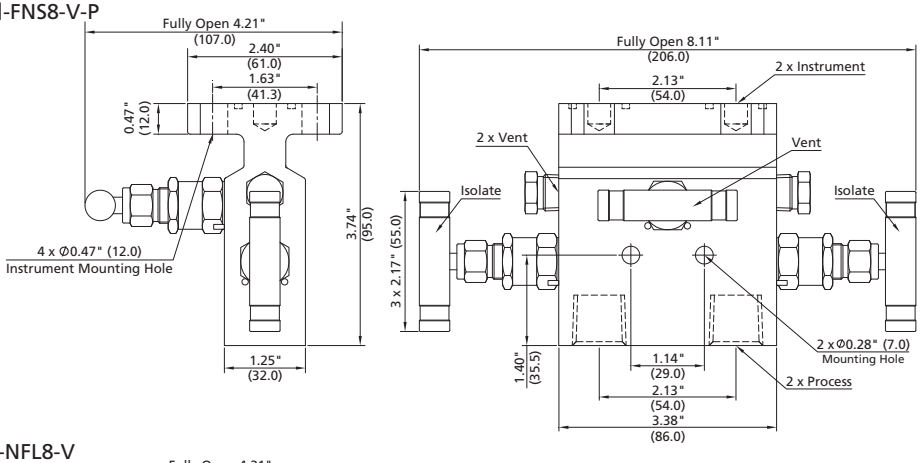

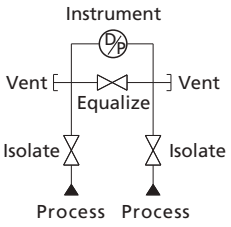

3D□□-NFL8-V

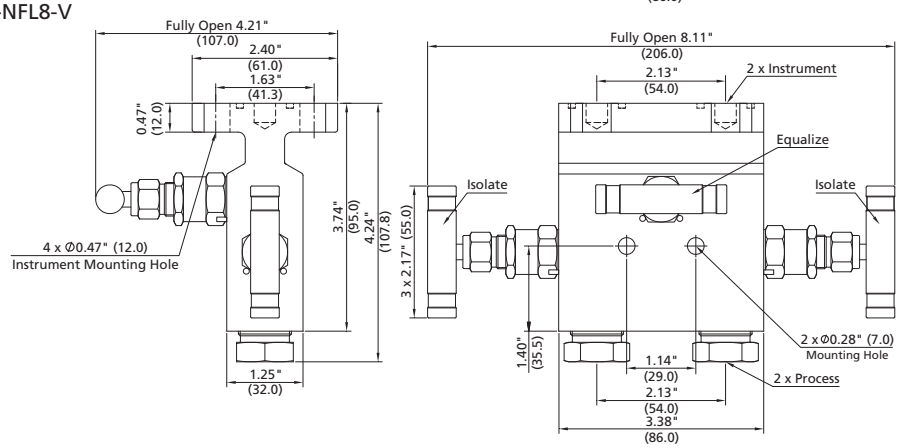

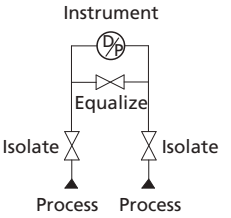

Every manifold is supplied with two PTFE sealing rings for manifold-to-instrument and four 7/16" UNF x 24mm high tensile bolts.

Basic Ordering Number	Process	Instrument	Vent
3D□□-F-V	Flange	MSS SP-99 Flange	-
3D□□-F-V-P			1/4 Female NPT with Plug

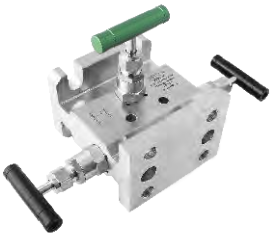

3D□□-F-V

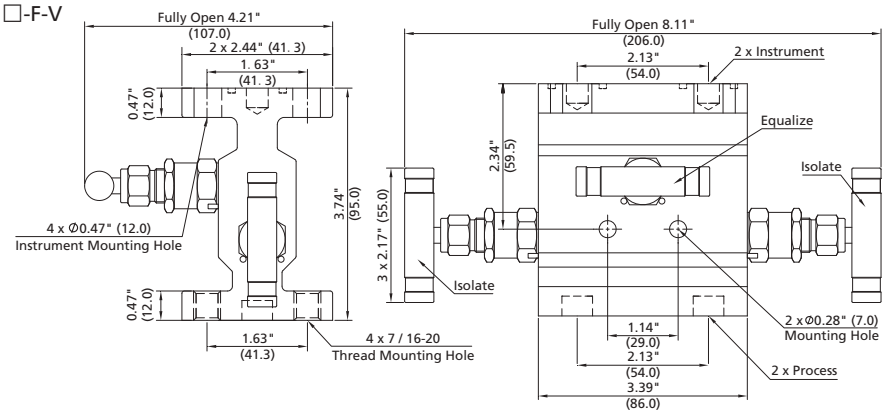

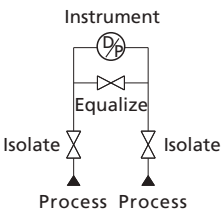

Every manifold is supplied with two PTFE sealing rings for manifold-to-instrument and four 7/16" UNF x 24mm high tensile bolts.

◎ 5-valve Manifolds

Basic Ordering Number	Process	Instrument	Vent
5D□□-FNS8-V	1/2 Female NPT	MSS SP-99 Flange	1/4 Female NPT
5D□□-FNS8-V-P			1/4 Female NPT with Plug
5D□□-NFL8-V	1/2"Female FITOK Tube Fitting		1/4 Female NPT

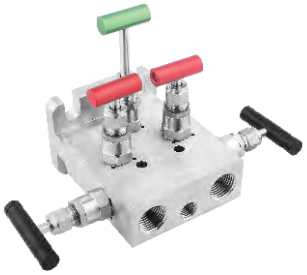

5D□□-FNS8-V

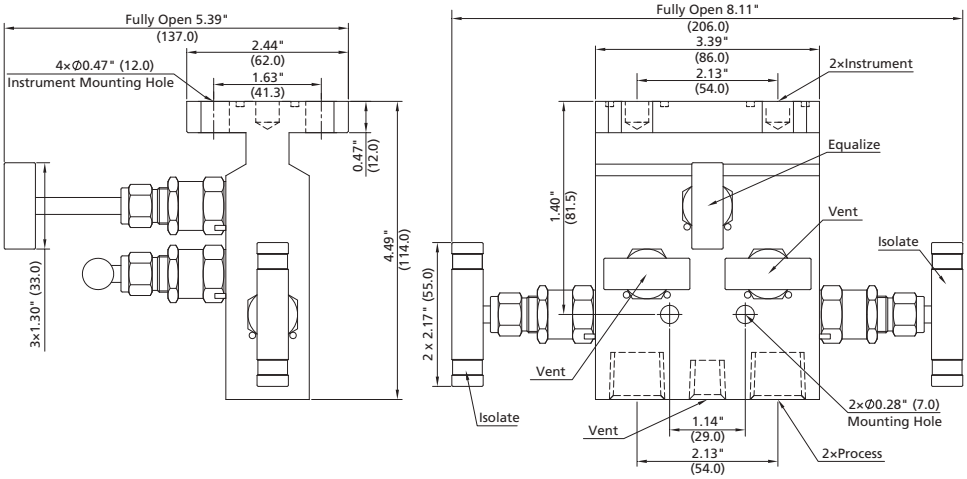

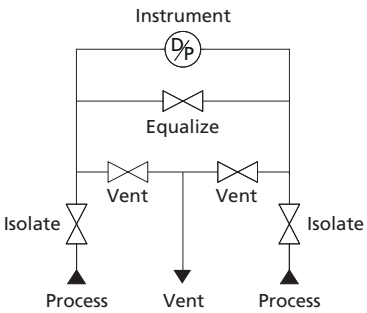

5D□□-NFL8-V

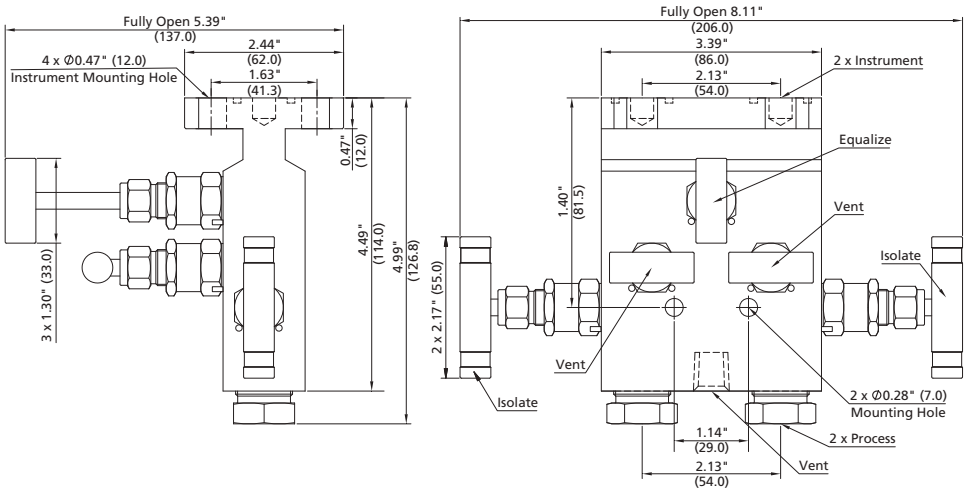

Every manifold is supplied with two PTFE sealing rings for manifold-to-instrument and four 7/16" UNF x 24mm high tensile bolts.

Basic Ordering Number	Process	Instrument	Vent	Test
5D□□-FNS8-VB	1/2 Female NPT	MSS SP-99 Flange	1/4 Female NPT	–
5D□□-FNS8-VB-P			1/4 Female NPT with Plug	
5D□□-FNS8-VB-E			1/4 Female NPT	1/4 Female NPT with Plug

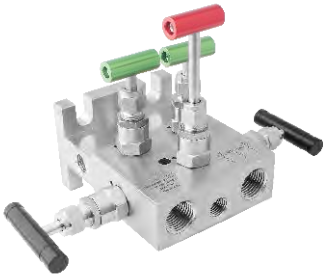

5D□□-FNS8-VB-E

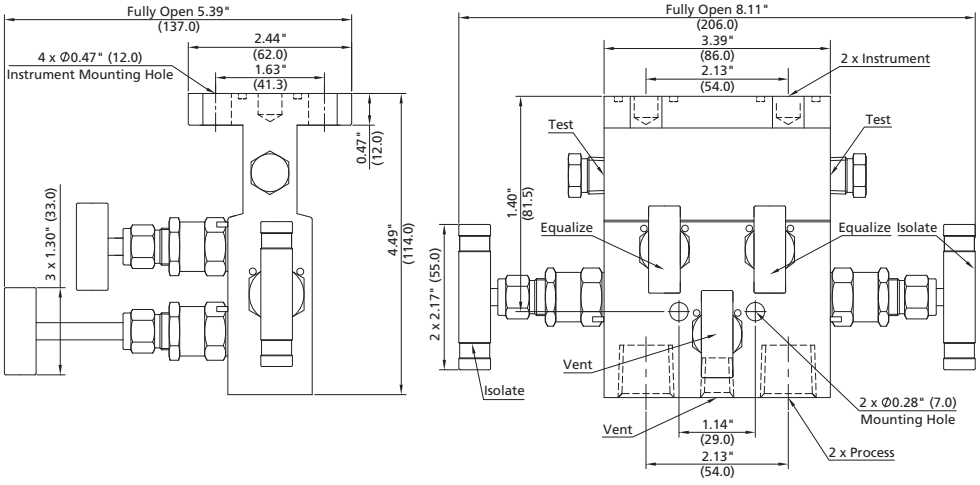

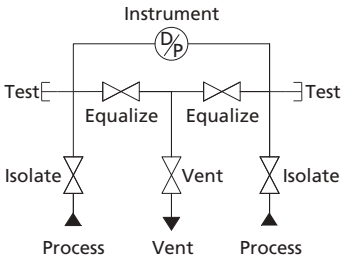

Basic Ordering Number	Process	Instrument	Vent	Test
5D□□-F-VB	Flange	MSS SP-99 Flange	1/4 Female NPT	-
5D□□-F-VB-P			1/4 Female NPT with Plug	
5D□□-F-VB-E			1/4 Female NPT	1/4 Female NPT with Plug

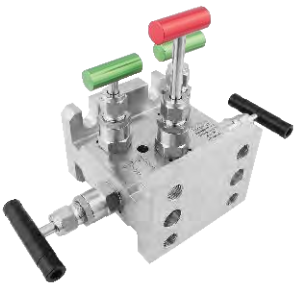

5D□□-F-VB-E

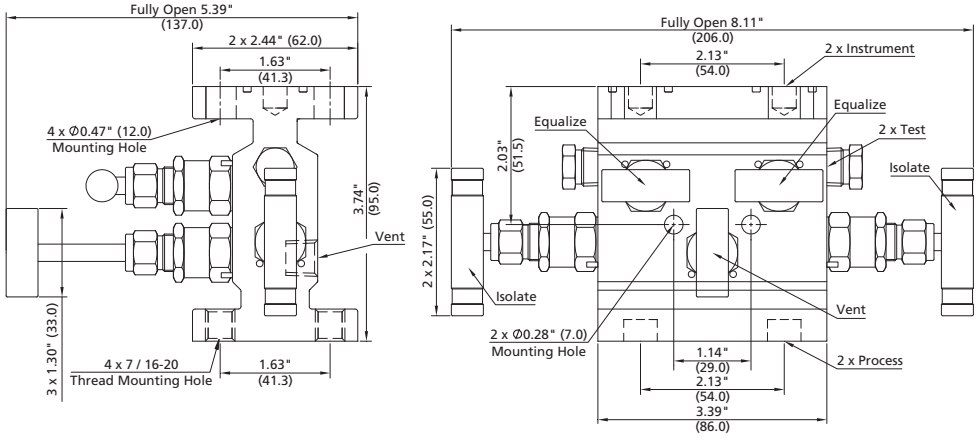

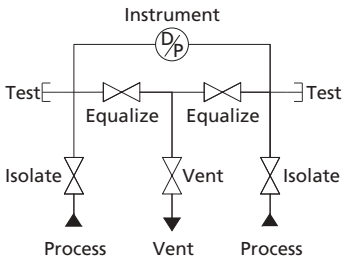

Every manifold is supplied with two PTFE sealing rings for manifold-to-instrument and four 7/16" UNF x 24mm high tensile bolts.

Ordering Number Description

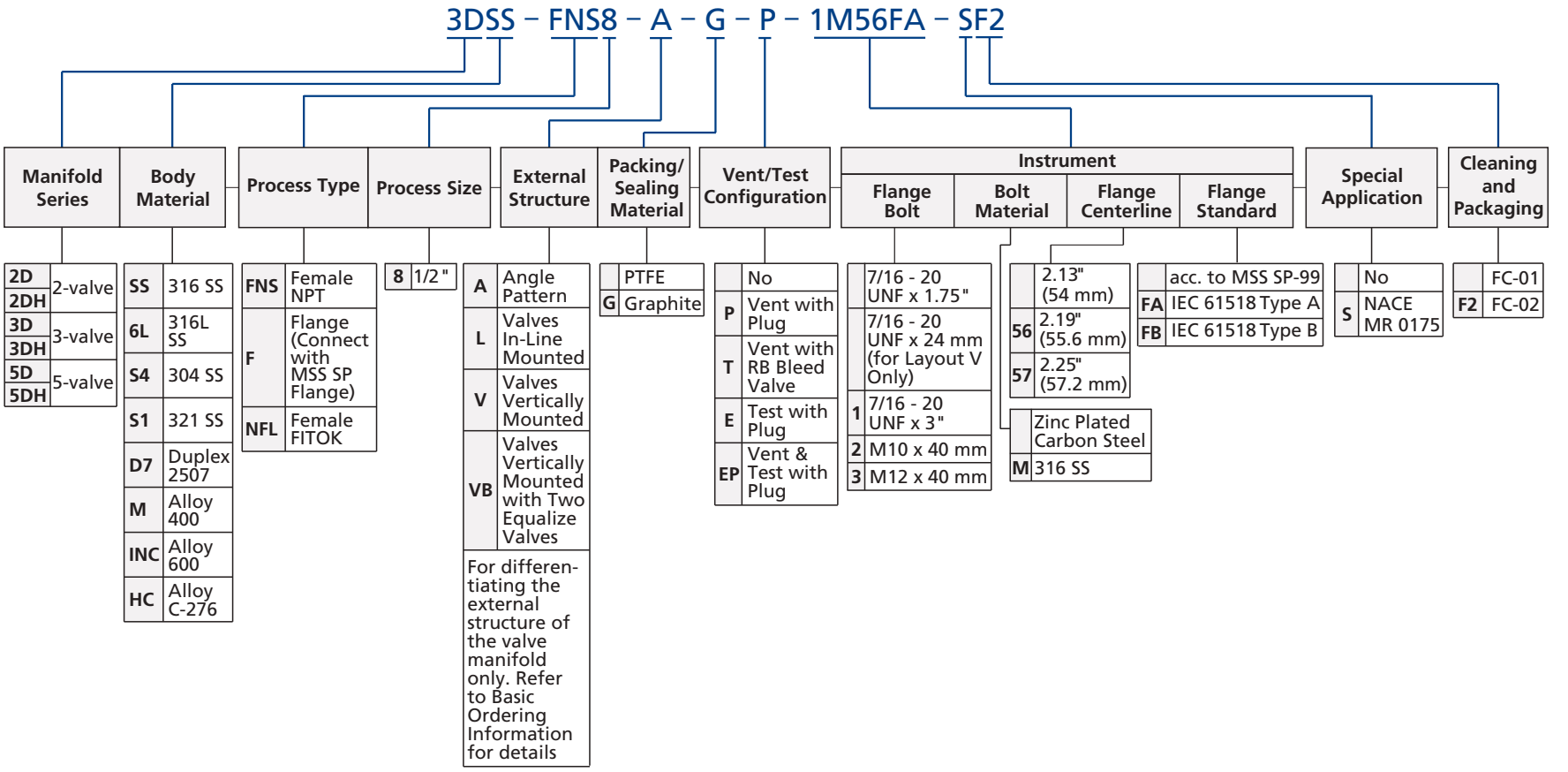

Notes:

1. Standard manifold instrument is flange (according to MSS SP-99), flange distance (center-to-center) is 2.13" (54 mm).
   Distance of 2.19" (55.6 mm) suitable for transmitters of range 6, 7 and 1151.
   Distance of 2.25" (57.2 mm) transmitters of range 8 and 1151.
2. Cleaning and Packaging:
   FC-01: Standard cleaning and packaging for general industrial procedures.
   FC-02: Special cleaning and packaging for wetted system components to ensure compliance with product cleanliness requirement as stated in ASTM G93 Level C.
3. "Ordering Number Description" is a reference to understand the combination rules of FITOK product part number. Not all combinations are available. If you have any questions, please contact FITOK Group or our authorised distributors.

Direct Mount Manifolds (transmitter without flange)

Specifically designed for assembly to Rosemount®coplanar™ pressure transmitters (including 3051C, 3051S, 2024 and 3095 models).
Each manifold is included with: 4 pcs 7/16" UNF x 2" high tensile bolts. Assembles directly to transmitter.

◎ 2-valve manifolds

Basic Ordering Number	Process	Instrument	Vent
2D□□-FNS8-C	1/2 Female NPT	Flange	1/4 Female NPT
2D□□-FNS8-C-P			1/4 Female NPT with Plug
2DH□□-FNS8-C			1/4 Female NPT

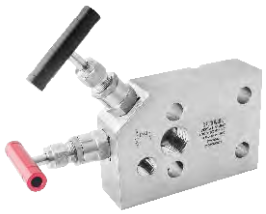

2D□□-FNS8-C

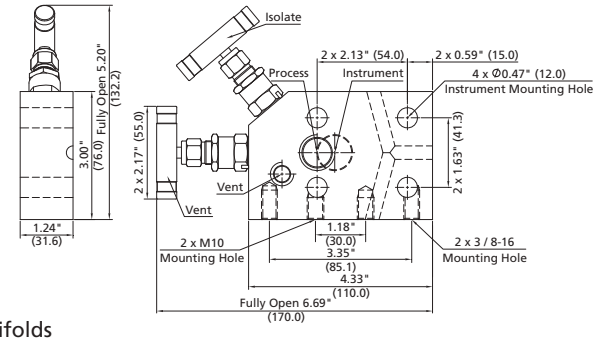

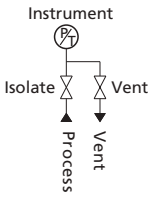

◎ 3-valve manifolds

Basic Ordering Number	Process	Instrument	Vent
3D□□-FNS8-C-T	1/2 Female NPT	Flange	1/4 Female NPT with Relief Valve
3DH□□-FNS8-C-T			



3D□□-FNS8-C-T

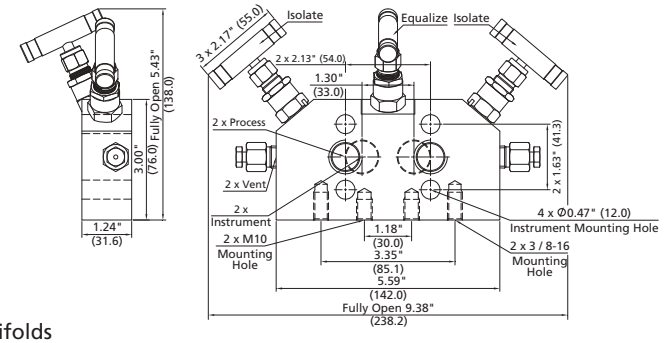

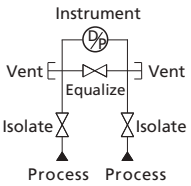

◎ 5-valve manifolds

Basic Ordering Number	Process	Instrument	Vent
5D□□-FNS8-C	1/2 Female NPT	Flange	1/4 Female NPT
5D□□-FNS8-C-P			1/4 Female NPT with Plug
5DH□□-FNS8-C			1/4 Female NPT



5D□□-FNS8-C

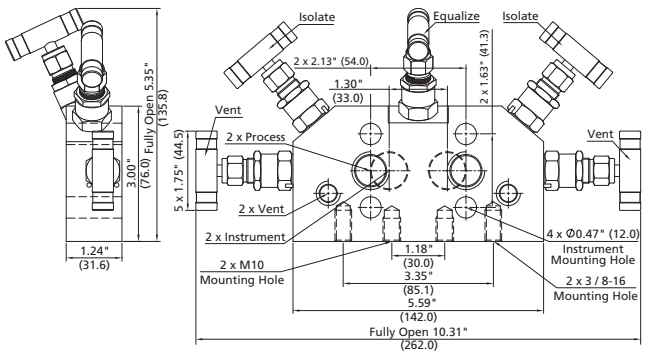

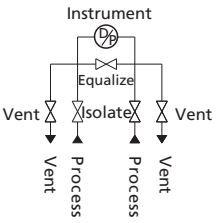

Dimensions shown are for 2D/3D/5D Series manifolds. For dimensions of 2DH/3DH/5DH Series manifolds, please contact FITOK Group or our authorized distributors.

Accessories

Manifold Mounting Bracket Kit

The integral assembly includes: bracket, U-bolts, bolts, gaskets, nuts

Basic Ordering Number	Mounting Manifold
SS-M2P-2BK	2R□□-XX-A, 2R□□-XX-L, 2RH□□-XX-A
SS-M2P-2BK-50	2R□□-XX-V
SS-M2P-2BK-17.5	3R□□-XX-V
SS-M2P-2BK-28.7	5R□□-XX-VB, 5R□□-XX-V

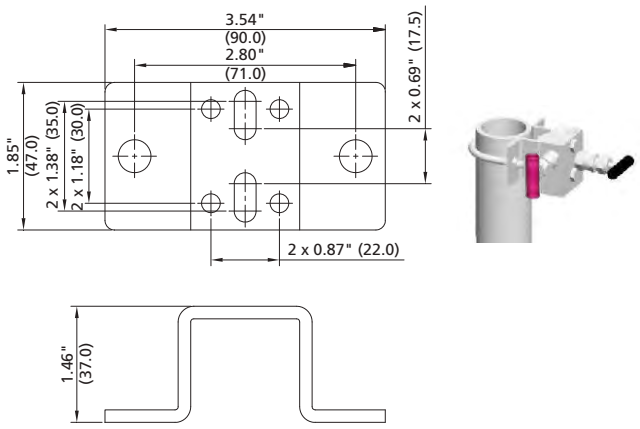

Dimensions shown are for manifold SS-M2P-2BK.
For dimensions of other manifolds, please contact FITOK Group or our authorized distributors.

Basic Ordering Number	Mounting Manifold
SS-M2P-4BK	2D□□-XX-A, 2D□□-XX-L, 3D□□-XX-A, 3D□□-XX-L, 5D□□-XX-A, 5D□□-XX-AB, 5R□□-XX-L, 5R□□-XX-AB, 2DH□□-XX-A, 3DH□□-XX-A, 5DH□□-XX-A, 5RH□□-XX-AB

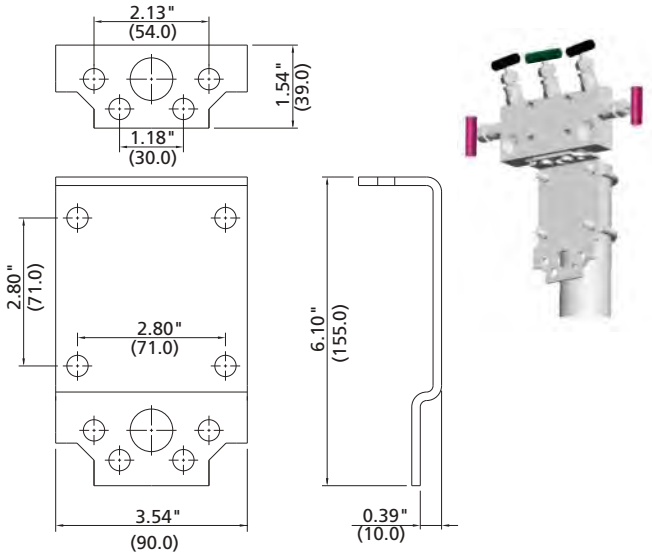

Basic Ordering Number	Mounting Manifold
SS-M2P-6BK	2D□□-XX-C, 3D□□-XX-C, 5D□□-XX-C, 2DH□□-XX-C, 3DH□□-XX-C, 5DH□□-XX-C

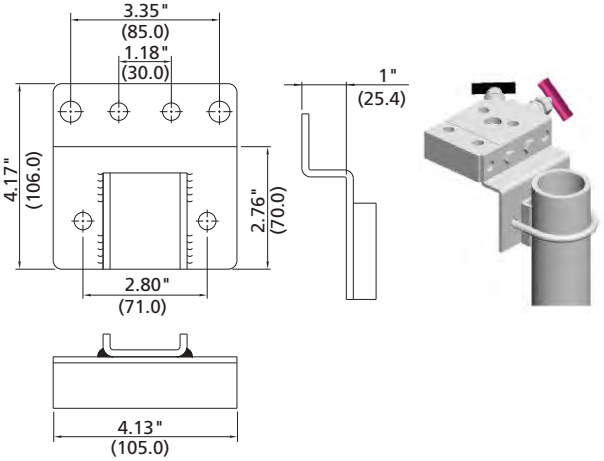

Basic Ordering Number	Mounting Manifold
SS-M2P-8BK	2D□□-XX-A, D□□-XX-A, 3D□□-XX-L, 2D□□-XX-C, 3D□□-XX-C, 5D□□-XX-C

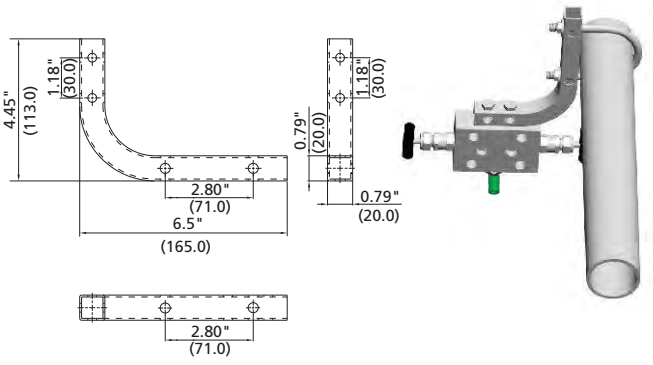

For more installation information regarding other manifolds, please contact FITOK Group or our authorized distributors.

Kidney Flanges and Eccentric Flanges

Features

- Working temperature:
  PTFE: -65°F to 450°F (-54°C to 232°C)
  Graphite: -65°F to 1200°F (-54°C to 649°C)
- Integrally forged body
- Standard material: A182 F316
- The process connection of transmitter can be changed to other connection types

Types and Dimensions

KF Series

Basic Ordering Number	Connection Type and Size	Dimension in. (mm)
		A
SS-KF-FNS4	1/4 Female FITOK	1.10 (28.0)
SS-KF-FNS8	1/2 Female FITOK	1.10 (28.0)
SS-KF-FL8	1/2 FITOK	2.48 (63.0)
SS-KF-PB8	1/2 PB	2.10 (53.3)

EF Series (Eccentric)

Basic Ordering Number	Connection Type and Size	Dimension in. (mm)
		A
SS-EF-FNS4	1/4 Female FITOK	1.10 (28)
SS-EF-FNS8	1/2 Female FITOK	1.10 (28)
SS-EF-FL8	1/2 FITOK	2.48 (63)
SS-EF-PB8	1/2 PB	2.10 (53.3)

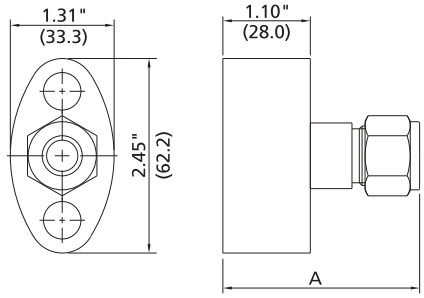

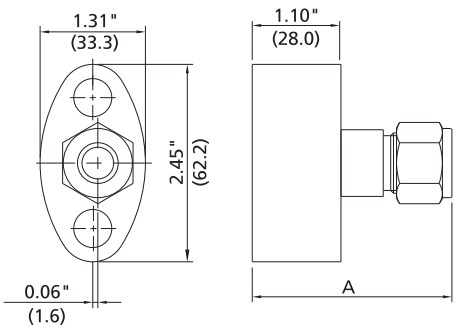

1. A kidney flange set contains a kidney flange, a PTFE flange seal ring and two 7/16 - 20 UNF high tensile bolts.
2. A whole eccentric flange set contains an eccentric flange, a PTFE flange seal ring and two 7/16 - 20 UNF high tensile bolts.
3. The standard flange seal material is PTFE, graphite is an option. To order graphite flange seal material, add "- G" as a suffix.
4. A variety of center line distances can be obtained by using various combinations of kidney flanges sets: 2.00" (50.8 mm), 2.13" (54.0 mm) and 2.25" (57.2 mm).

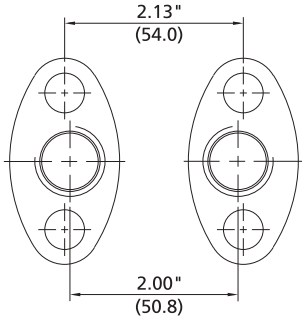

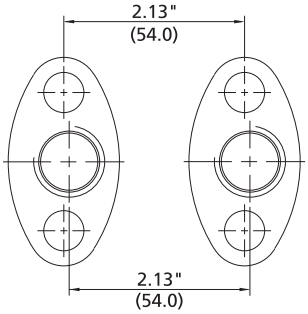

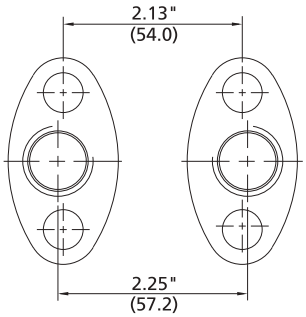

Block and Bleed Valves

BB, DB, SB and DBB Series



Contents

Overview C-28

Features C-28

Design Codes C-28

Module Structures and Features C-29

Standard Materials of Construction C-30

Pressure-Temperature Ratings C-30

Integral Type Flange Block and Bleed Valves C-33

Split Type Flange Block and Bleed Valves C-40

Wafer Type Flange Block and Bleed Valves C-46

Butt-Welded Type Block and Bleed Valves C-54

Injection Type Block and Bleed Valves C-62

Sampling Type Block and Bleed Valves C-64

Instrument Block and Bleed Valves C-66

Notes:

◎ Packing may need to be adjusted during valve use.

◎ For better maintenance, when storing the block and bleed valves:
The needle valve should be in the half-open position.
The ball valve should be in the fully open position.

◎ Ball valves that have not been opened for a period of time may have a high initial actuation torque.

Overview

Features

◎ Integral type, split type or wafer type body construction available
◎ Multiple functions available: double block and bleed, single block and bleed, double block, single block, injection and sampling
◎ Compact design, weight, space and cost savings
◎ Each valve is leak tested to a requirement in accordance with API 598
◎ Optional fire-safe design to API-607, anti-static design to EN 12266-2 and NACE MR0175 compliance

Design Codes

ASME B16.34	Valves-Flanged, Threaded and Welding End
ASME B16.5	Pipe Flanges and Flanged Fittings
ASME B1.20.1	Pipe Threads, General Purpose
ASME B16.25	Buttwelding Ends
NACE MR 0175/ ISO 15156	Petroleum and Natural Gas Industries-Materials for use in H2S-containing Environments in Oil and Gas Production
API 598	Valve Inspection and Testing
API 607	Fire Test for Soft-Seated Quarter Turn Valves Testing of Valves
MSS SP-25	Standard Marking System for Valves, Fittings, Flanges and Unions
EN 12266-2	Industrial valves - Testing of metallic valves - Part 2: Tests, test procedures and acceptance criteria - Supplementary requirements.
EN 1092-1	Flanges and their joints - Circular flanges for pipes, valves, fittings and accessories, PN designated - Part 1: Steel flanges
MSS SP-97	Integrally Reinforced Forged Branch outlet Fittings-Socket Welding, Threaded, and Buttwelding Ends
ISO 17292	Metal ball valves for petroleum petrochemical and allied industries

Module Structures and Features

◎ Ball Valve

Designator: B

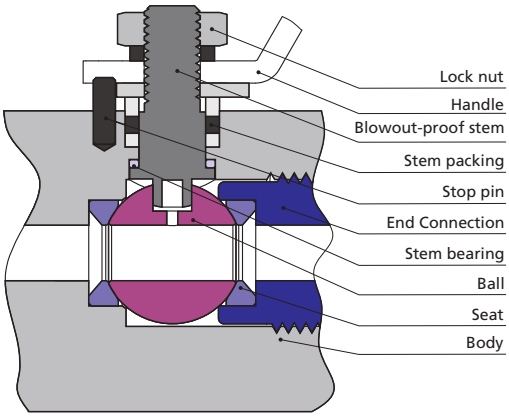

- ◎ Pressure rating up to Class 2500
- ◎ Bore sizes: NPS 3/8~NPS 2 (DN10~DN50)
- ◎ Working temperature: -65°F to 450°F (-54°C to 232°C)
- ◎ Side-loaded stem prevents stem blowout and enhances system safety
- ◎ High-strength stem bearing provides smooth actuation and eliminates galling between valve stem and body
- ◎ Packing adjustment may be required during the service life of the valves
- ◎ Designed to be used in the fully open or fully closed position
- ◎ Floating ball design to ensure the tightness under high pressure

◎ Screwed Bonnet Needle Valve

Designator: N

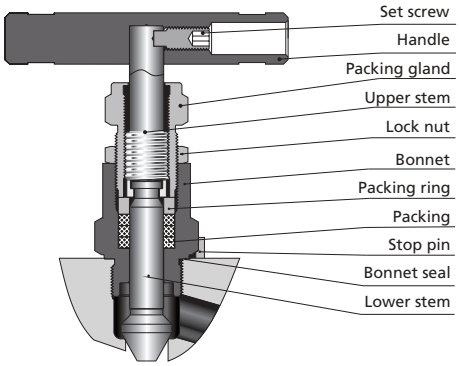

- ◎ Maximum pressure up to 10000 psig
- ◎ Bore sizes: 4 mm, 6.4 mm, 9.5 mm
- ◎ Working temperature:
  PTFE packing: -65°F to 450°F (-54 °C to 232°C)
  Graphite packing: -65°F to 1200°F (-54°C to 649°C)
- ◎ Upper stem threads cold rolled and lower stem surface hardened for high strength and smooth operation
- ◎ Upper stem thread lubricant isolated from system media
- ◎ Two-piece stem design: Linear instead of rotary motion of the rising, non-rotating stem minimizes packing abrasion and reduces the friction between the seat and the tip
- ◎ Safety back seating seal in fully open position

◎ Outside Screw and Yoke (OS&Y) Needle Valve

Designator: O

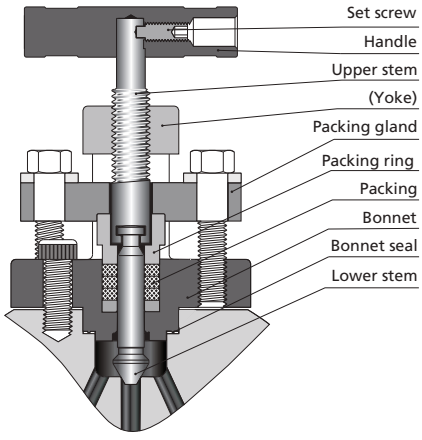

- ◎ Pressure rating up to Class 2500
- ◎ Bore Size: 4 mm
- ◎ Working temperature:
  PTFE packing: -65°F to 450°F (-54°C to 232°C)
  Graphite packing: -65°F to 1200°F (-54°C to 649°C)
- ◎ Upper stem threads cold rolled and lower stem surface hardened for high strength and smooth operation
- ◎ Upper stem thread lubricant isolated from system media
- ◎ Two-piece stem design: Linear instead of rotary motion of the rising, non-rotating stem minimizes packing abrasion and reduces the friction between the seat and the tip
- ◎ Bolted bonnet enhances strength and reliability
- ◎ Adjustable gland flange allows easy access to the packing gland and packing adjustment for an effective stem seal
- ◎ Investment case yoke is formed by precision casting which enhances strength and perfect stem alignment

◎ Handle colors indicate functions:

Ball Valves:
YELLOW=Isolation/Block RED=Bleed/Vent
Screwed Bonnet Needle Valves:
BLACK=Isolation/Block RED=Bleed/Vent
Bolted OS&Y Needle Valves:
BLACK=Isolation/Block RED=Bleed/Vent

Standard Materials of Construction

Component \ Material		316 SS	316L SS	Carbon Steel	Low Alloy Steel	Duplex Steel
Body		F316 / A182	F316L / A182	A105	LF2 / A350	F53 / A182
Ball Valve	Ball	316 / A479	316L / A479	316 / A479	316 / A479	S32750 / A479
	Stem	316 / A479	316L / A479	316 / A479	316 / A479	S32750 / A479
	End connection	316 / A479	316L / A479	316 / A479	316 / A479	S32750 / A479
	Seat	PEEK				
	Body Seal	Graphite or PTFE				
	Stem Packing	Graphite or PTFE				
Screwed Bonnet Needle Valves	Lower Stem	316 / A479	316L / A479	316 / A479	316 / A479	S32750 / A479
	Bonnet	316 / A479	316L / A479	316 / A479	316 / A479	S32750 / A479
	Bonnet Seal	316L / A269	316L / A269	316L / A269	316L / A269	S32750 / A790
	Stem Packing	Graphite or PTFE				
OS&Y Needle Valves	Lower Stem	316 / A479	316L / A479	316 / A479	316 / A479	S32750 / A479
	Bonnet	F316 / A182	F316L / A182	A105	LF2 / A350	F53 / A182
	Bonnet Seal	316L / A269	316L / A269	316L / A269	316L / A269	S32750 / A790
	Stem Packing	Graphite or PTFE				

Pressure - Temperature Ratings

◎ Ratings are taken from ASME B16.34, Table 2-2.2 and Table VII-2-2.2. The rating data are based on stainless steel F316.

Temp. (°C)	ASME Rating					
	150	300	600	900	1500	2500
	Working Pressure (bar)					
-29~38	19.0	49.6	99.3	148.9	248.2	413.7
50	18.4	48.1	96.2	144.3	240.6	400.9
100	16.2	42.2	84.4	126.6	211.0	351.6
150	14.8	38.5	77.0	115.5	192.5	320.8
200	13.7	35.7	71.3	107.0	178.3	297.2
250	12.1	33.4	66.8	100.1	166.9	278.1
300	10.2	31.6	63.2	94.9	158.1	263.5
325	9.3	30.9	61.8	92.7	154.4	257.4
350	8.4	30.3	60.7	91.0	151.6	252.7
375	7.4	29.9	59.8	89.6	149.4	249.0
400	6.5	29.4	58.9	88.3	147.2	245.3
425	5.5	29.1	58.3	87.4	145.7	242.9
450	4.6	28.8	57.7	86.5	144.2	240.4
475	3.7	28.7	57.3	86.0	143.4	238.9
500	2.8	28.2	56.5	84.7	140.9	235.0
538	1.4	25.2	50.0	75.2	125.5	208.9

Temp. (°F)	ASME Rating					
	150	300	600	900	1500	2500
	Working Pressure (psig)					
-20~100	275	720	1440	2160	3600	6000
200	235	620	1240	1860	3095	5160
300	215	560	1120	1680	2795	4660
400	195	515	1025	1540	2570	4280
500	170	480	955	1435	2390	3980
600	140	450	900	1355	2255	3760
650	125	440	885	1325	2210	3680
700	110	435	870	1305	2170	3620
750	95	425	855	1280	2135	3560
800	80	420	845	1265	2110	3520
850	65	420	835	1255	2090	3480
900	50	415	830	1245	2075	3460
950	35	385	775	1160	1930	3220
1000	20	365	725	1090	1820	3030

◎ Ratings are taken from ASME B16.34, Table 2-2.3 and Table VII-2-2.3. The rating data are based on F316L stainless steel.

Temp. (°C)	ASME Rating						Temp. (°F)	ASME Rating					
	150	300	600	900	1500	2500		150	300	600	900	1500	2500
	Working Pressure (bar)							Working Pressure (psig)					
-29~38	15.9	41.4	82.7	124.1	206.8	344.7	-20~100	230	600	1200	1800	3000	5000
50	15.3	40.0	80.0	120.1	200.1	333.5	200	195	510	1020	1535	2555	4260
100	13.3	34.8	69.6	104.4	173.9	289.9	300	175	455	910	1370	2280	3800
150	12.0	31.4	62.8	94.2	157.0	261.6	400	160	420	840	1260	2100	3500
200	11.2	29.2	58.3	87.5	145.8	243.0	500	150	395	785	1180	1970	3280
250	10.5	27.5	54.9	82.4	137.3	228.9	600	140	370	745	1115	1860	3100
300	10.0	26.1	52.1	78.2	130.3	217.2	650	125	365	730	1095	1825	3040
325	9.3	25.5	51.0	76.4	127.4	212.3	700	110	360	720	1080	1800	3000
350	8.4	25.1	50.1	75.2	125.4	208.9	750	110	355	705	1060	1765	2940
375	7.4	24.8	49.5	74.3	123.8	206.3	800	80	345	690	1035	1730	2880
400	6.5	24.3	48.6	72.9	121.5	202.5	850	65	340	675	1015	1690	2820
425	5.5	23.9	47.7	71.6	119.3	198.8							
450	4.6	23.4	46.8	70.2	117.1	195.1							

◎ Ratings are taken from ASME B16.34, Table 2-1.1 and Table VII-2-1.1. The rating data are based on A105/A350 LF2 (Not recommended for use above 425°C).

Temp. (°C)	ASME Rating						Temp. (°F)	ASME Rating					
	150	300	600	900	1500	2500		150	300	600	900	1500	2500
	Working Pressure (bar)							Working Pressure (psig)					
-29~38	19.6	51.1	102.1	153.2	255.3	425.5	-20~100	285	740	1480	2220	3705	6170
50	19.2	50.1	100.2	150.4	250.6	417.7	200	260	680	1360	2035	3395	5655
100	17.7	46.6	93.2	139.8	233.0	388.3	300	230	655	1310	1965	3270	5450
150	15.8	45.1	90.2	135.2	225.4	375.6	400	200	635	1265	1900	3170	5280
200	13.8	43.8	87.6	131.4	219.0	365.0	500	170	605	1205	1810	3015	5025
250	12.1	41.9	83.9	125.8	209.7	349.5	600	140	570	1135	1705	2840	4730
300	10.2	39.8	79.6	119.5	199.1	331.8	650	125	550	1100	1650	2745	4575
325	9.3	38.7	77.4	116.1	193.6	322.6	700	110	530	1065	1590	2665	4425
350	8.4	37.6	75.1	112.7	187.8	313.0	750	95	505	1015	1520	2535	4230
375	7.4	36.4	72.7	109.1	181.8	303.1	800	80	410	825	1235	2055	3430
400	6.5	34.7	69.4	104.2	173.6	289.3	850	65	320	640	955	1595	2655
425	5.5	28.8	57.5	86.3	143.8	239.7	900	50	230	460	690	1150	1915
450	4.6	23.0	46.0	69.0	115.0	191.7	950	35	135	275	410	685	1145
475	3.7	17.4	34.9	52.3	87.2	145.3	1000	20	85	170	255	430	715
500	2.8	11.8	23.5	35.3	58.8	97.9							
538	1.4	5.9	11.8	17.7	29.5	49.2							

◎ Ratings are taken from ASME B16.34, Table 2-2.8 and Table VII-2-2.8. The rating data are based on F51 (Not recommended for use above 315 °C).

Temp. (°C)	ASME Rating					
	150	300	600	900	1500	2500
	Working Pressure (bar)					
-29~38	20.0	51.7	103.4	155.1	258.6	430.9
50	19.5	51.7	103.4	155.1	258.6	430.9
100	17.7	50.7	101.3	152.0	253.3	422.2
150	15.8	45.9	91.9	137.8	229.6	382.7
200	13.8	42.7	85.3	128.0	213.3	355.4
250	12.1	40.5	80.9	121.4	202.3	337.2
300	10.2	38.9	77.7	116.6	194.3	323.8
325	9.3	38.2	76.3	114.5	190.8	318.0
350	8.4	37.6	75.3	112.9	188.2	313.7
375	7.4	37.4	74.7	112.1	186.8	311.3
400	6.5	36.5	73.3	109.8	183.1	304.9

Temp. (°F)	ASME Rating					
	150	300	600	900	1500	2500
	Working Pressure (psig)					
-20~100	290	750	1500	2250	3750	6250
200	260	745	1490	2230	3720	6200
300	230	665	1335	2000	3335	5560
400	200	615	1230	1845	3070	5120
500	170	580	1160	1740	2905	4840
600	140	555	1115	1670	2785	4640
650	125	545	1095	1640	2735	4560
700	110	540	1085	1625	2710	4520
750	95	530	1065	1595	2660	4430

Integral Type Flange Block and Bleed Valves

Features

- Bore sizes: NPS 3/8~NPS 3/4 (DN10~DN20)
- Flanges are forged integrally with the body
- Smooth transition from the process piping system to instrumentation in a single configuration
- Compact size and reduced weight minimize space envelope and support structure required
- Easy to install
- 1/2 female NPT standard vent with plug

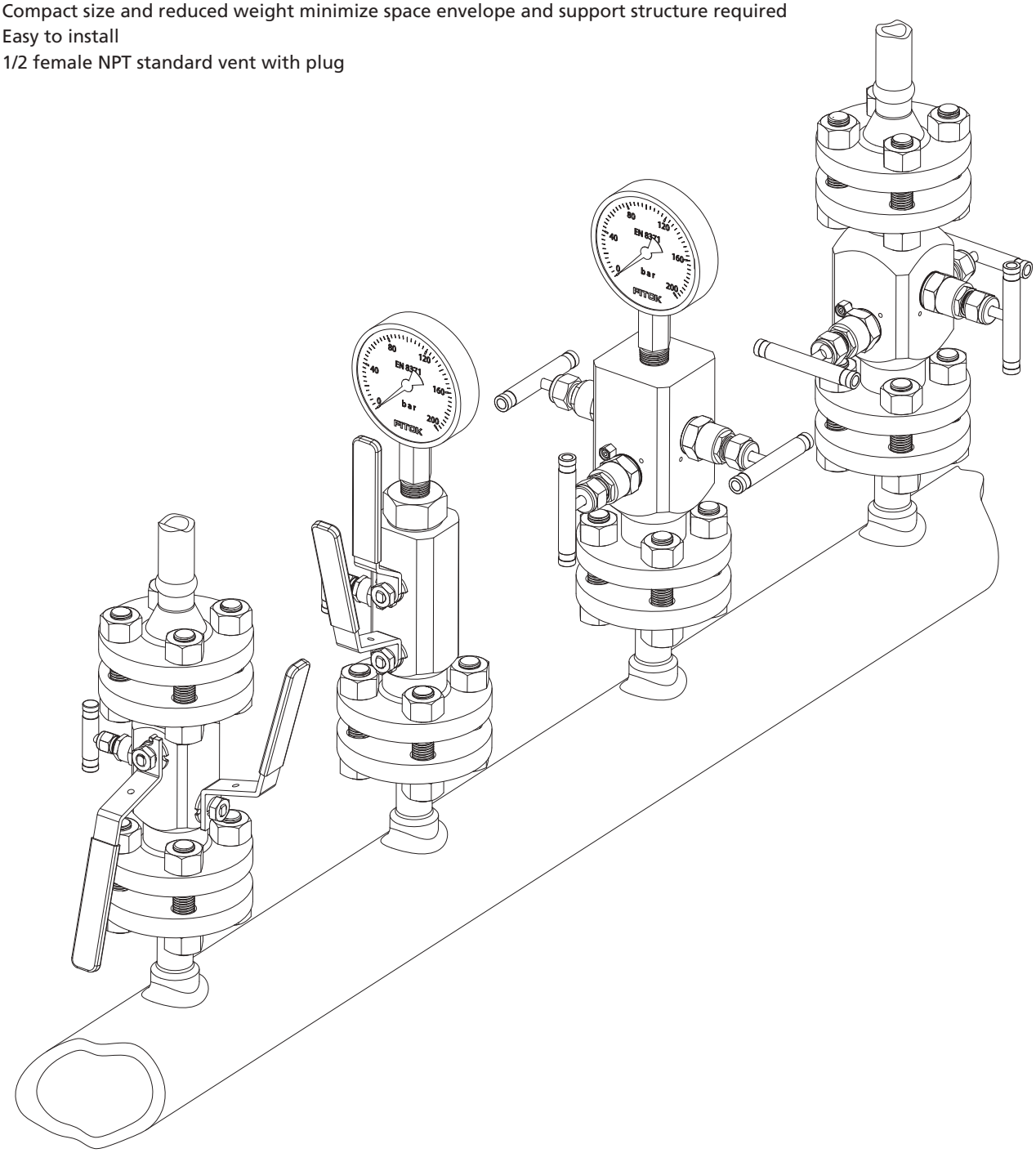

Valve Types and Dimensions

Double Block and Bleed Valves (DBB)

◎ Configuration (BBN): ball isolate, ball isolate, needle vent 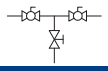 Connection: Flange+Flange

Basic Ordering Information	Inlet/Process Connection	Outlet/Instrument Connection	Bleed/Vent	Dimensions
DBB□□-□BBN□-FM□□□□-V8	RF Flange	RF Flange	1/2 Female NPT	See Tables 1-3
DBB□□-□BBN□-FJ□□□□-V8	RJ Flange	RJ Flange	1/2 Female NPT	

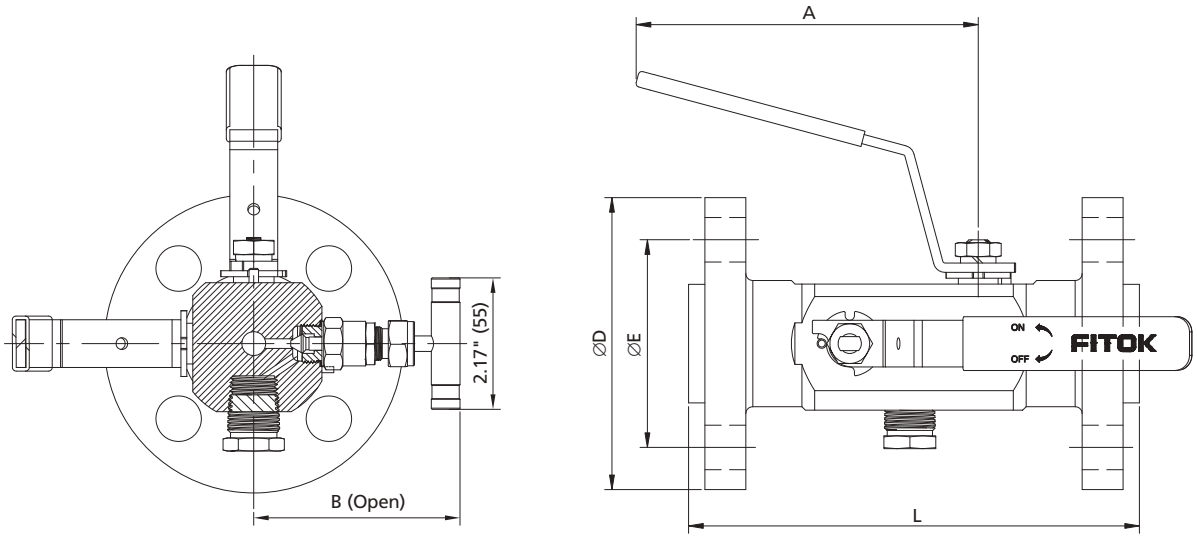

◎ Configuration (BBN): ball isolate, ball isolate, needle vent 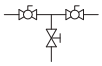 Connection: Flange+Thread

Basic Ordering Information	Inlet/Process Connection	Outlet/Instrument Connection	Bleed/Vent	Dimensions
DBB□□-□BBN□-FM□□□□-FNS□-V8	RF Flange	Female NPT	1/2 Female NPT	See Tables 1-3
DBB□□-□BBN□-FJ□□□□-FNS□-V8	RJ Flange	Female NPT	1/2 Female NPT	

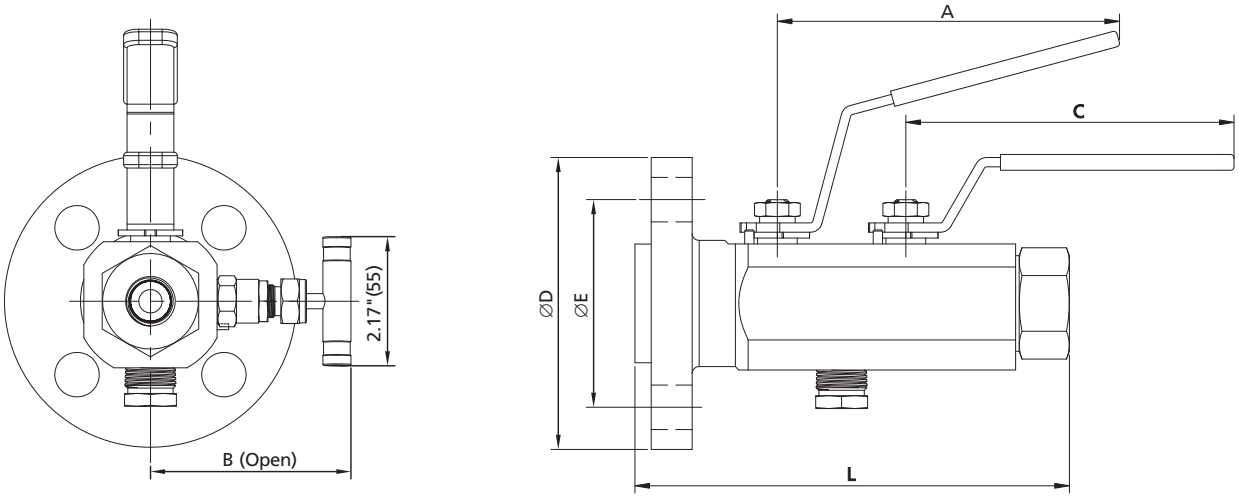

◎ Configuration (NNN): needle isolate, needle isolate, needle vent  Connection: Flange+Flange

Basic Ordering Information	Inlet/Process Connection	Outlet/Instrument Connection	Bleed/Vent	Dimensions
DBB□□-2NNN-FM□□□□-V8	RF Flange	RF Flange	1/2 Female NPT	See Table 4
DBB□□-2NNN-FJ□□□□-V8	RJ Flange	RJ Flange	1/2 Female NPT	

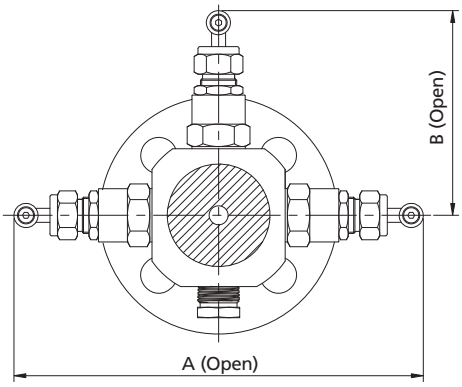

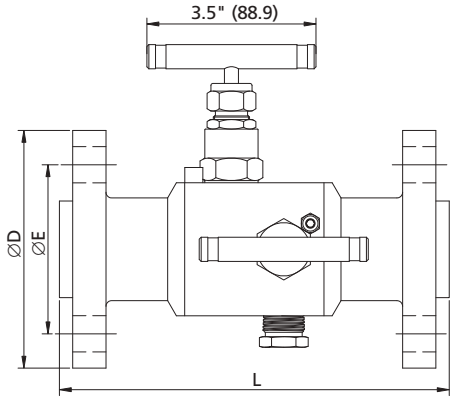

◎ Configuration (NNN): needle isolate, needle isolate, needle vent  Connection: Flange+Thread

Basic Ordering Information	Inlet/Process Connection	Outlet/Instrument Connection	Bleed/Vent	Dimensions
DBB□□-2NNN-FM□□□□-FNS□-V8	RF Flange	Female NPT	1/2 Female NPT	See Table 4
DBB□□-2NNN-FJ□□□□-FNS□-V8	RJ Flange	Female NPT	1/2 Female NPT	

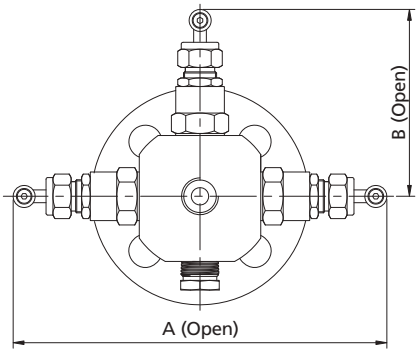

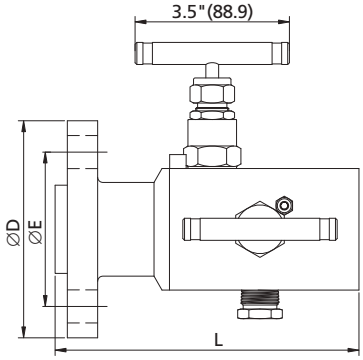

Single Block and Bleed Valves (BB)

◎ Configuration (BN): ball isolate, needle vent  Connection: Flange+Flange

Basic Ordering Information	Inlet/Process Connection	Outlet/Instrument Connection	Bleed/Vent	Dimensions
BB□□-□BN□-FM□□□□-V8	RF Flange	RF Flange	1/2 Female NPT	See Tables 1-3
BB□□-□BN□-FJ□□□□-V8	RJ Flange	RJ Flange	1/2 Female NPT	

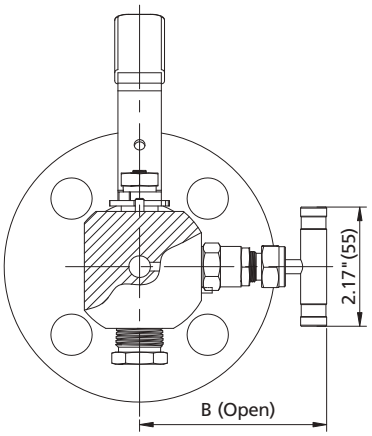

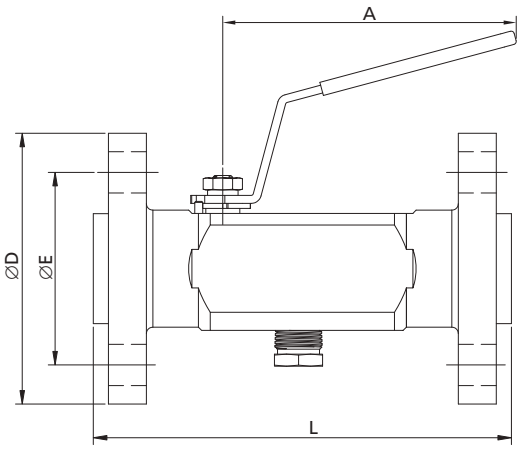

◎ Configuration (BN): ball isolate, needle vent  Connection: Flange+Thread

Basic Ordering Information	Inlet/Process Connection	Outlet/Instrument Connection	Bleed/Vent	Dimensions
BB□□-□BN□-FM□□□□-FNS□-V8	RF Flange	Female NPT	1/2 Female NPT	See Tables 1-3
BB□□-□BN□-FJ□□□□-FNS□-V8	RJ Flange	Female NPT	1/2 Female NPT	

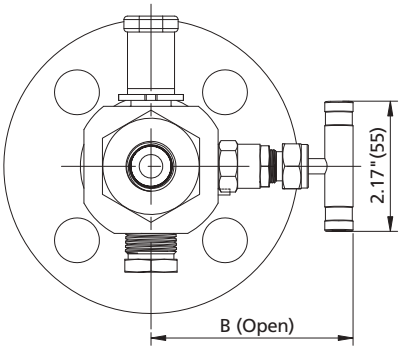

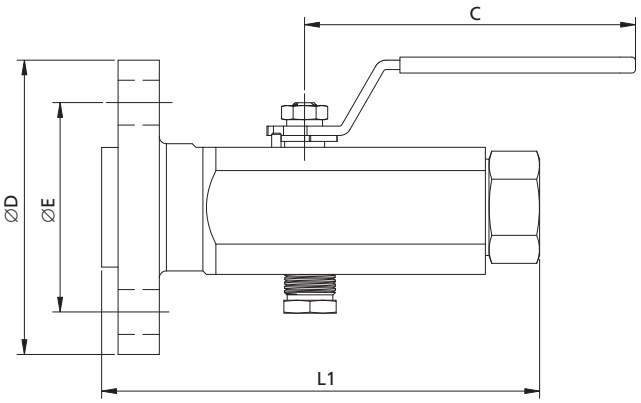

Table 1: Flange Options and Dimensions for 3/8 in. (9.5 mm) Bore Size (Ball/Needle)

Flange Size	ASME Class	Dimensions, in. (mm)								
		A	B	C	L			L1	∅D	∅E
					RF Flange	RJ Flange	Flange/NPT	Flange/NPT		
NPS1/2 (DN15)	150	5.75 (146)	3.48 (88.5)	5.51 (140)	6.41 (163)	6.41 (163)	6.61 (168)	4.72 (120)	3.54 (90)	2.37 (60.3)
	300				6.81 (173)	6.81 (173)	7.09 (180)	5.12 (130)	3.74 (95)	2.63 (66.7)
	600						7.32 (186)	5.35 (136)		
	900/1500				7.99 (203)	7.99 (203)	7.87 (200)	5.91 (150)	4.72 (120)	3.25 (82.6)
	2500						7.99 (203)	6.22 (158)	5.31 (135)	3.50 (88.9)
NPS3/4 (DN20)	150				6.41 (163)	6.41 (163)	6.89 (175)	5.04 (128)	3.94 (100)	2.75 (69.9)
	300				6.81 (173)	6.81 (173)	7.20 (183)	5.24 (133)	4.53 (115)	3.25 (82.6)
	600						7.40 (188)	5.43 (138)		
	900/1500				7.99 (203)	7.99 (203)	7.95 (202)	5.98 (152)	5.12 (130)	3.50 (88.9)
	2500						8.19 (208)	6.22 (158)	5.51 (140)	3.75 (95.2)
NPS1 (DN25)	150				6.41 (163)	6.41 (163)	6.89 (175)	5.12 (130)	4.33 (110)	3.13 (79.4)
	300				7.01 (178)	7.01 (178)	7.09 (180)		4.92 (125)	3.50 (88.9)
	600				7.60 (193)	7.60 (193)	7.32 (186)	5.35 (136)		
	900/1500				10.3 (261)	10.3 (261)	8.07 (205)	6.10 (155)	5.91 (150)	4.00 (101.6)
	2500				10.6 (273)	10.6 (273)	8.35 (212)	6.38 (162)	6.30 (160)	4.25 (108.0)
NPS1-1/2 (DN40)	150				8.90 (226)	8.90 (226)	7.01 (178)	4.96 (126)	4.92 (125)	3.87 (98.4)
	300				9.89 (251)	9.89 (251)	7.28 (185)	5.31 (135)	6.10 (155)	4.50 (114.3)
	600						7.60 (193)	5.63 (143)		
	900/1500				11.5 (291)	11.5 (291)	8.31 (211)	6.34 (161)	7.09 (180)	4.87 (123.8)
	2500				12.4 (316)	12.4 (316)	8.86 (225)	6.89 (175)	8.07 (205)	5.75 (146)
NPS2 (DN50)	150				9.09 (231)	9.09 (231)	7.01 (178)	5.24 (133)	5.91 (150)	4.75 (120.7)
	300				10.1 (256)	10.1 (256)	7.48 (190)	5.51 (140)	6.49 (165)	5.00 (127.0)
	600						7.83 (199)	5.87 (149)		
	900/1500				12.0 (306)	12.0 (306)	8.78 (223)	6.81 (173)	8.46 (215)	6.50 (165.1)
	2500				13.6 (346)	13.6 (346)	9.06 (230)	7.09 (180)	9.25 (235)	6.75 (171.4)

Table 2: Flange Options and Dimensions for 1/2 in. (14 mm) Bore Size (Ball/Needle)

Flange Size	ASME Class	Dimensions, in. (mm)								
		A	B	C	L			L1	∅D	∅E
					RF Flange	RJ Flange	Flange/NPT	Flange/NPT		
NPS1 (DN25)	150	6.73 (171)	3.68 (93.5)	6.5 (165)	9.10 (231)	9.10 (231)	8.54 (217)	5.87 (149)	4.33 (110)	3.13 (79.4)
	300				9.49 (241)	9.49 (241)	8.66 (220)	5.98 (152)	4.92 (125)	3.50 (88.9)
	600						8.74 (222)	6.06 (154)		
	900/1500				10.3 (261)	10.3 (261)	9.53 (242)	6.85 (174)	5.91 (150)	4.00 (101.6)
	2500				10.7 (273)	10.7 (273)	9.80 (249)	7.13 (181)	6.30 (160)	4.25 (108.0)
NPS1-1/2 (DN40)	150				9.49 (241)	9.49 (241)	8.07 (205)	5.87 (149)	4.92 (125)	3.87 (98.4)
	300				9.89 (251)	9.89 (251)	8.74 (222)	6.06 (154)	6.10 (155)	4.50 (114.3)
	600						9.02 (229)	6.34 (161)		
	900/1500				11.5 (291)	11.5 (291)	9.61 (244)	6.93 (176)	7.09 (180)	4.87 (123.8)
	2500				12.4 (316)	12.4 (316)	10.2 (259)	7.52 (191)	8.07 (205)	5.75 (146)
NPS2 (DN50)	150				9.49 (241)	9.49 (241)	8.15 (207)	5.91 (150)	5.91 (150)	4.75 (120.7)
	300				10.3 (261)	10.3 (261)	8.46 (215)	6.06 (154)	6.49 (165)	5.00 (127.0)
	600						8.86 (225)	6.93 (176)		
	900/1500				12.0 (306)	12.0 (306)	9.61 (244)	7.09 (180)	8.46 (215)	6.50 (165.1)
	2500				13.6 (346)	13.6 (346)	10.1 (256)	7.60 (193)	9.25 (235)	6.75 (171.4)

FITOK

Table 3: Flange Options and Dimensions for 3/4 in. (20 mm) Bore Size (Ball/Needle)

Flange Size	ASME Class	Dimensions, in. (mm)								
		A	B	C	L			L1	∅D	∅E
					RF Flange	RJ Flange	Flange/NPT	Flange/NPT		
NPS1-1/2 (DN40)	150	6.73 (171)	3.88 (98.5)	6.5 (165)	8.94 (227)	8.94 (227)	9.13 (232)	6.3 (160)	4.92 (125)	3.87 (98.4)
	300				9.41 (239)	9.41 (239)	9.41 (239)	6.57 (167)	6.10 (155)	4.50 (114.3)
	600				10.04 (255)	10.04 (255)	9.69 (246)	6.85 (174)		
	900/1500				12.05 (306)	12.05 (306)	10.39 (264)	7.56 (192)	7.09 (180)	4.87 (123.8)
	2500				12.99 (330)	12.99 (330)	10.87 (276)	8.03 (204)	8.07 (205)	5.75 (146)
NPS2 (DN50)	150				8.86 (225)	8.86 (225)	9.06 (230)	6.22 (158)	5.91 (150)	4.75 (120.7)
	300				9.37 (238)	9.37 (238)	9.33 (237)	6.49 (165)	6.49 (165)	5.00 (127.0)
	600				10.24 (260)	10.24 (260)	9.61 (244)	6.77 (172)		
	900/1500				12.60 (320)	12.60 (320)	11.02 (280)	7.64 (194)	8.46 (215)	6.50 (165.1)
	2500				13.7 (348)	13.7 (348)	11.42 (290)	8.27 (210)	9.25 (235)	6.75 (171.4)

Table 4: Flange Options and Dimensions for 3/8 in. (9.5 mm) Bore Size (Needle)

Flange Size	ASME Class	Dimensions, in. (mm)							
		A	B	L			∅D	∅E	
				RF Flange	RJ Flange	Flange/NPT			
NPS1/2 (DN15)	150	9.17 (233)	4.59 (116.5)	6.89 (175)	6.89 (175)	6.10 (155)	3.54 (90)	2.37 (60.3)	
	300			7.28 (185)	7.28 (185)	6.30 (160)	3.74 (95)	2.63 (66.7)	
	600								
	900/1500			8.46 (215)	8.46 (215)	6.89 (175)	4.72 (120)	3.25 (82.6)	
	2500			9.25 (235)	9.25 (235)	7.28 (185)	5.31 (135)	3.50 (88.9)	
NPS3/4 (DN20)	150			6.89 (175)	6.89 (175)	6.10 (155)	3.94 (100)	2.75 (69.9)	
	300			7.28 (185)	7.28 (185)	6.30 (160)	4.53 (115)	3.25 (82.6)	
	600			7.87 (200)	7.87 (200)	6.69 (170)			
	900/1500			8.66 (225)	8.66 (225)	7.09 (180)	5.12 (130)	3.50 (88.9)	
	2500			9.45 (240)	9.45 (240)	7.48 (190)	5.51 (140)	3.75 (95.2)	
NPS1 (DN25)	150			6.89 (175)	6.89 (175)	6.10 (155)	4.33 (110)	3.13 (79.4)	
	300			7.28 (185)	7.28 (185)	6.30 (160)	4.92 (125)	3.50 (88.9)	
	600			8.07 (205)	8.07 (205)	6.89 (175)			
	900/1500			10.04 (255)	10.04 (255)	7.68 (195)	5.91 (150)	4.00 (101.6)	
	2500			10.24 (260)	10.24 (260)	7.87 (200)	6.30 (160)	4.25 (108.0)	
NPS1-1/2 (DN40)	150			7.09 (180)	7.09 (180)	6.30 (160)	4.92 (125)	3.87 (98.4)	
	300			8.67 (220)	8.67 (220)	6.89 (175)	6.10 (155)	4.50 (114.3)	
	600			8.86 (225)	8.86 (225)	7.28 (185)			
	900/1500			10.43 (265)	10.43 (265)	7.87 (200)	7.09 (180)	4.87 (123.8)	
	2500			12.20 (310)	12.20 (310)	8.86 (225)	8.07 (205)	5.75 (146)	
NPS2 (DN50)	150			7.68 (195)	7.68 (195)	6.69 (170)	5.91 (150)	4.75 (120.7)	
	300			8.67 (220)	8.67 (220)	7.09 (180)	6.49 (165)	5.00 (127.0)	
	600			9.06 (230)	9.06 (230)	748 (190)			
	900/1500			11.42 (290)	11.42 (290)	8.67 (220)	8.46 (215)	6.50 (165.1)	
	2500			12.60 (320)	12.60 (320)	9.06 (230)	9.25 (235)	6.75 (171.4)	

Ordering Number Description

DBBSS - 1BBN1 - FM16300 - FNS8 - V8 - GSF2 - IE

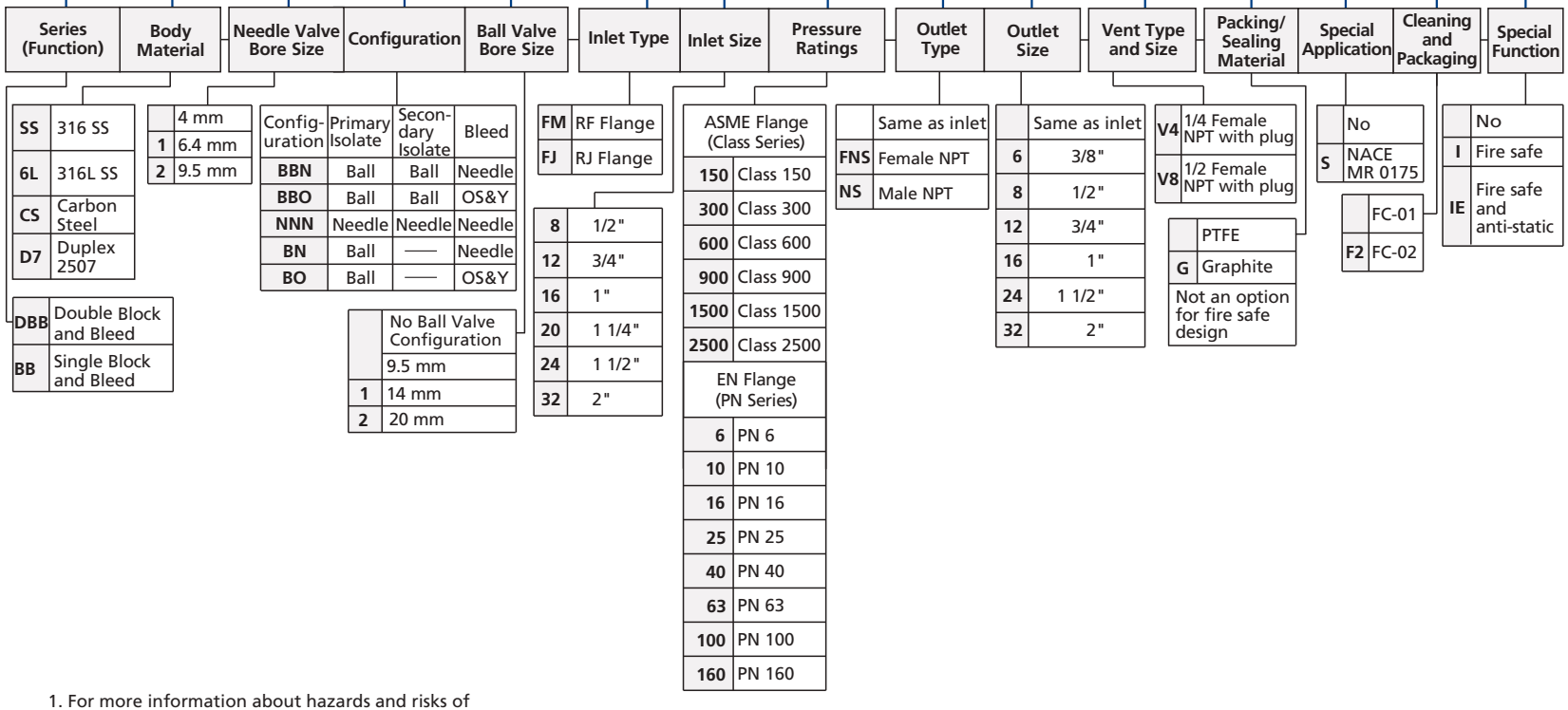

1. For more information about hazards and risks of oxygen-enriched system, please contact FITOK Group or our authorized distributors.
2. Cleaning and Packaging:
2.1 FC-01: Standard cleaning and packaging for general industrial procedures.
2.2 FC-02: Special cleaning and packaging for wetted system components to ensure compliance with product cleanliness requirement as stated in ASTM G93 Level C.

Split Type Flang Block and Bleed Valves

Features

- Bore size: NPS 3/8~NPS 2 (DN10~DN50)
- 3-piece, bolted body construction
- Optional fire-safe and anti-static design
- 1/2 female NPT standard vent with plug

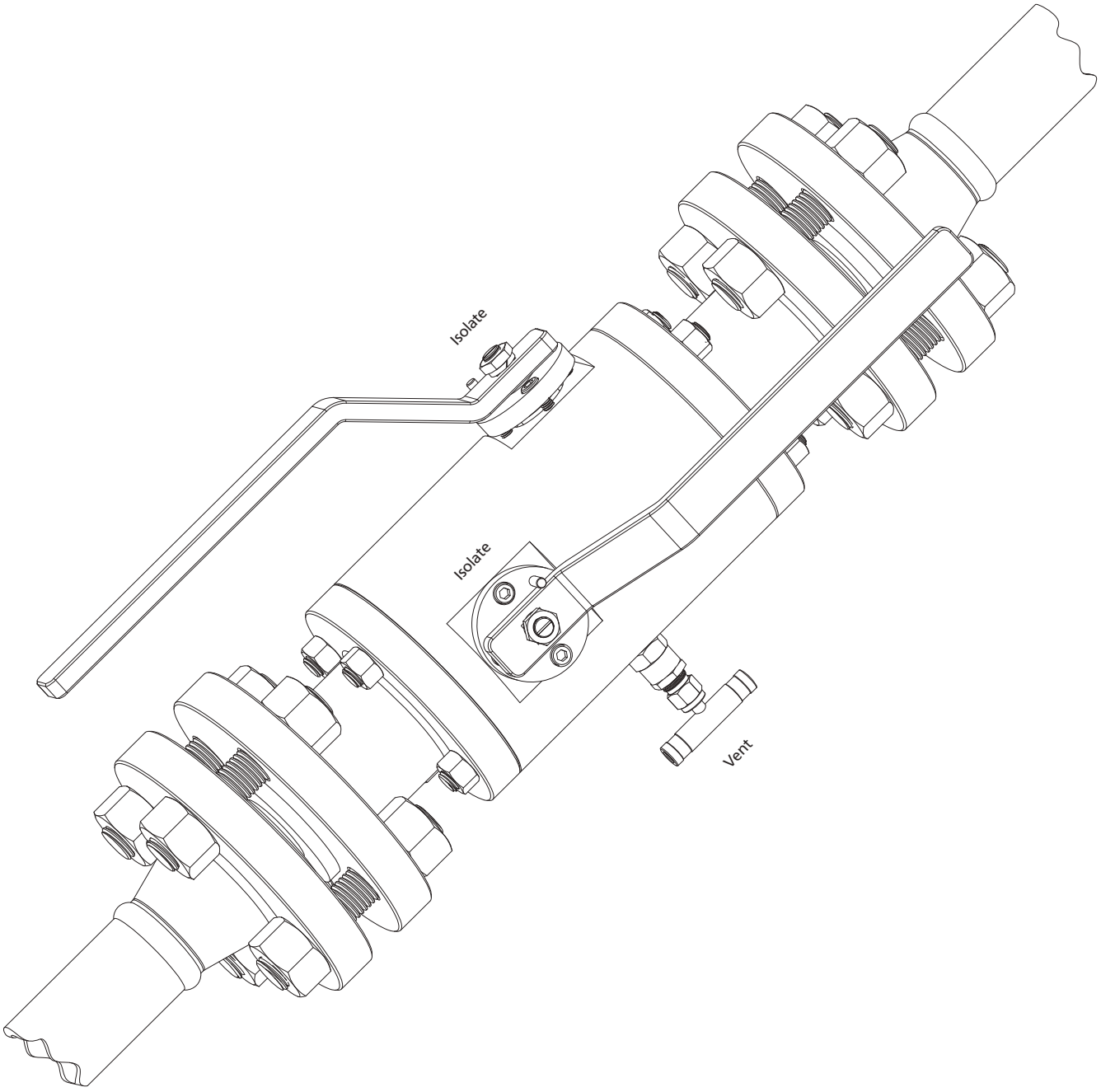

Valve Types and Dimensions

Double Block and Bleed Valves (DBB)

◎ Configuration (BBN): ball isolate, ball isolate, needle vent  Connection: Flange+Flange

Basic Ordering Information	Inlet/Process Connection	Outlet/Instrument Connection	Bleed/Vent	Dimensions
DBB□□-□BBN□-FM□□□□-V8-FS-I	RF Flange	RF Flange	1/2 Female NPT	See Tables 8-12
DBB□□-□BBN□-FJ□□□□-V8-FS-I	RJ Flange	RJ Flange	1/2 Female NPT	

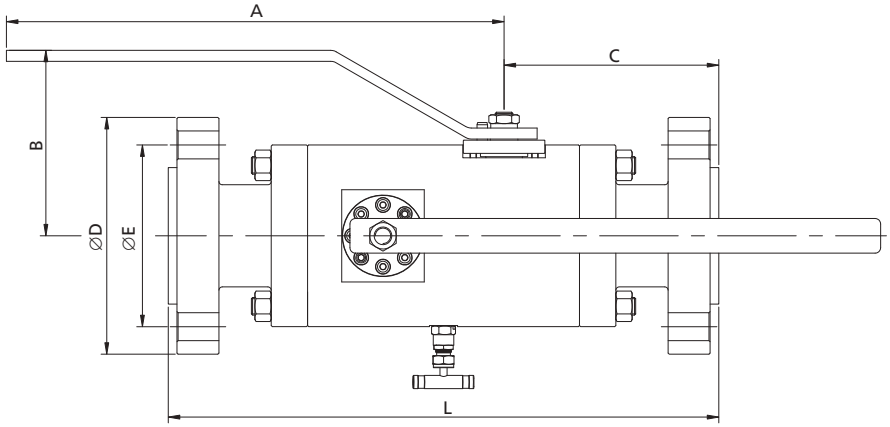

Table 8: Flange Options and Dimensions for 3/8 in. (9.5 mm) Bore Size (Ball/Needle)

Flange Size	ASME Class	Dimensions, in. (mm)						
		A	B	C	L		∅D	∅E
					RF Flange	RJ Flange		
NPS1/2 (DN15)	150	8.62 (219)	4.37 (134)	4.37 (111)	11.10 (282)	-	3.54 (90)	2.37 (60.3)
	300			4.49 (114)	11.34 (288)	11.57 (294)	3.74 (95)	2.63 (66.7)
	600			4.76 (121)	11.89 (302)	11.89 (302)		
	900/1500			5.31 (135)	12.99 (330)	12.99 (330)	4.72 (120)	3.25 (82.6)
	2500			5.63 (143)	13.62 (346)	13.62 (346)	5.31 (135)	3.50 (88.9)
NPS3/4 (DN20)	150			4.45 (113)	11.26 (286)	-	3.94 (100)	2.75 (69.9)
	300			4.65 (118)	11.65 (296)	11.65 (296)	4.53 (115)	3.25 (82.6)
	600			4.92 (125)	12.20 (310)	12.20 (310)		
	900/1500			5.43 (138)	13.23 (336)	13.23 (336)	5.12 (130)	3.50 (88.9)
	2500			5.71 (145)	13.78 (350)	13.78 (350)	5.51 (140)	3.75 (95.2)
NPS1 (DN25)	150			4.49 (114)	11.34 (288)	11.34 (288)	4.33 (110)	3.13 (79.4)
	300			4.72 (120)	11.81 (300)	11.81 (300)	4.92 (125)	3.50 (88.9)
	600			4.96 (126)	12.28 (312)	12.28 (312)		
	900/1500			5.71 (145)	13.78 (350)	13.78 (350)	5.91 (150)	4.00 (101.6)
	2500			5.98 (152)	14.33 (364)	14.33 (364)	6.30 (160)	4.25 (108.0)
NPS1-1/2 (DN40)	150			4.65 (118)	11.65 (296)	11.65 (296)	4.92 (125)	3.87 (98.4)
	300			5.0 (127)	12.36 (314)	12.36 (314)	6.10 (155)	4.50 (114.3)
	600			5.31 (135)	12.99 (330)	12.99 (330)		
	900/1500	7.44 (189)	7.05 (179)	5.98 (152)	14.33 (364)	14.33 (364)	7.09 (180)	4.87 (123.8)
	2500			6.57 (167)	15.51 (394)	15.67 (398)	8.07 (205)	5.75 (146)
NPS2 (DN50)	150	8.62 (219)	4.37 (134)	4.76 (121)	11.89 (302)	11.89 (302)	5.91 (150)	4.75 (120.7)
	300			4.88 (124)	12.13 (308)	12.28 (312)	6.49 (165)	5.00 (127.0)
	600			5.28 (134)	12.91 (328)	13.07 (332)		
	900/1500	7.44 (189)	7.05 (179)	6.22 (155)	14.57 (370)	14.72 (374)	8.46 (215)	6.50 (165.1)
	2500			6.69 (170)	15.75 (400)	15.91 (404)	9.25 (235)	6.75 (171.4)

Table 9: Flange Options and Dimensions for 1/2 in. (14 mm) Bore Size (Ball/Needle)

Flange Size	ASME Class	Dimensions, in. (mm)						
		A	B	C	L		∅D	∅E
					RF Flange	RJ Flange		
NPS1/2 (DN15)	150	8.62 (219)	4.37 (134)	4.37 (111)	11.10 (282)	-	3.54 (90)	2.37 (60.3)
	300			4.49 (114)	11.34 (288)	11.57 (294)	3.74 (95)	2.63 (66.7)
	600			4.76 (121)	11.89 (302)	11.89 (302)		
	900/1500			5.31 (135)	12.99 (330)	12.99 (330)	4.72 (120)	3.25 (82.6)
	2500			5.63 (143)	13.62 (346)	13.62 (346)	5.31 (135)	3.50 (88.9)
NPS3/4 (DN20)	150			4.45 (113)	11.26 (286)	-	3.94 (100)	2.75 (69.9)
	300			4.65 (118)	11.65 (296)	11.65 (296)	4.53 (115)	3.25 (82.6)
	600			4.92 (125)	12.20 (310)	12.20 (310)		
	900/1500			5.43 (138)	13.23 (336)	13.23 (336)	5.12 (130)	3.50 (88.9)
	2500			5.71 (145)	13.78 (350)	13.78 (350)	5.51 (140)	3.75 (95.2)
NPS1 (DN25)	150			4.49 (114)	11.34 (288)	11.34 (288)	4.33 (110)	3.13 (79.4)
	300			4.72 (120)	11.81 (300)	11.81 (300)	4.92 (125)	3.50 (88.9)
	600			4.96 (126)	12.28 (312)	12.28 (312)		
	900/1500			5.71 (145)	13.78 (350)	13.78 (350)	5.91 (150)	4.00 (101.6)
	2500			5.98 (152)	14.33 (364)	14.33 (364)	6.30 (160)	4.25 (108.0)
NPS1-1/2 (DN40)	150			4.65 (118)	11.65 (296)	11.65 (296)	4.92 (125)	3.87 (98.4)
	300			5.0 (127)	12.36 (314)	12.36 (314)	6.10 (155)	4.50 (114.3)
	600			5.31 (135)	12.99 (330)	12.99 (330)		
	900/1500	7.44 (189)	7.05 (179)	5.98 (152)	14.33 (364)	14.33 (364)	7.09 (180)	4.87 (123.8)
	2500			6.57 (167)	15.51 (394)	15.67 (398)	8.07 (205)	5.75 (146)
NPS2 (DN50)	150	8.62 (219)	4.37 (134)	4.76 (121)	11.89 (302)	11.89 (302)	5.91 (150)	4.75 (120.7)
	300			4.88 (124)	12.13 (308)	12.28 (312)	6.49 (165)	5.00 (127.0)
	600			5.28 (134)	12.91 (328)	13.07 (332)		
	900/1500	7.44 (189)	7.05 (179)	6.22 (155)	14.57 (370)	14.72 (374)	8.46 (215)	6.50 (165.1)
	2500			6.69 (170)	15.75 (400)	15.91 (404)	9.25 (235)	6.75 (171.4)

Table 10: Flange Options and Dimensions for 3/4 in. (20 mm) Bore Size (Ball/Needle)

Flange Size	ASME Class	Dimensions, in. (mm)						
		A	B	C	L		∅D	∅E
					RF Flange	RJ Flange		
NPS3/4 (DN20)	150	9.53 (242)	4.37 (111)	4.53 (115)	11.42 (290)	-	3.94 (100)	2.75 (69.9)
	300			4.72 (120)	11.81 (300)	12.20 (310)	4.53 (115)	3.25 (82.6)
	600			5.0 (127)	12.36 (314)	12.36 (314)		
	900/1500			5.51 (140)	13.39 (340)	13.39 (340)	5.12 (130)	3.50 (88.9)
	2500			5.79 (147)	13.94 (354)	13.94 (354)	5.51 (140)	3.75 (95.2)
NPS1 (DN25)	150			4.61 (117)	11.57 (294)	11.57 (294)	4.33 (110)	3.13 (79.4)
	300			4.80 (122)	11.97 (304)	11.97 (304)	4.92 (125)	3.50 (88.9)
	600			5.08 (129)	12.52 (318)	12.52 (318)		
	900/1500			5.83 (148)	14.02 (356)	14.02 (356)	5.91 (150)	4.00 (101.6)
	2500			6.1 (155)	14.57 (370)	14.57 (370)	6.30 (160)	4.25 (108.0)
NPS1-1/2 (DN40)	150			4.72 (120)	11.81 (300)	11.81 (300)	4.92 (125)	3.87 (98.4)
	300			5.12 (130)	12.6 (320)	12.6 (320)	6.10 (155)	4.50 (114.3)
	600			5.43 (138)	13.31 (338)	13.31 (338)		
	900/1500		6.34 (161)	6.06 (154)	14.49 (368)	14.49 (368)	7.09 (180)	4.87 (123.8)
	2500			6.70 (170)	15.75 (400)	15.87 (403)	8.07 (205)	5.75 (146)
NPS2 (DN50)	150		4.37 (111)	4.88 (124)	12.13 (308)	12.13 (308)	5.91 (150)	4.75 (120.7)
	300			5.0 (127)	12.36 (314)	12.52 (318)	6.49 (165)	5.00 (127.0)
	600			5.39 (137)	13.15 (334)	13.31 (338)		
	900/1500		6.34 (161)	6.22 (158)	14.8 (376)	14.96 (380)	8.46 (215)	6.50 (165.1)
	2500			6.81 (173)	15.98 (406)	16.14 (410)	9.25 (235)	6.75 (171.4)

Table 11: Flange Options and Dimensions for 1-1/2 in. (38.1 mm) Bore Size (Ball/Needle)

Flange Size	ASME Class	Dimensions, in. (mm)						
		A	B	C	L		∅D	∅E
					RF Flange	RJ Flange		
NPS1-1/2 (DN40)	150	10.7 (272)	5.28 (134)	5.43 (138)	14.2 (361)	14.7 (374)	4.92 (125)	3.87 (98.4)
	300			5.55 (141)	14.4 (367)	14.88 (378)	6.10 (155)	4.50 (114.3)
	600			5.87 (149)	15.12 (384)	15.12 (384)		
	900/1500		6.61 (168)	6.22 (158)	16.8 (402)	16.14 (410)	7.09 (180)	4.87 (123.8)
NPS2 (DN50)	150		5.28 (134)	5.47 (139)	14.3 (364)	14.8 (377)	5.91 (150)	4.75 (120.7)
	300			5.63 (143)	14.6 (372)	15.04 (382)	6.49 (165)	5.00 (127.0)
	600			5.98 (132)	15.4 (390)	15.5 (393)		
	900/1500		6.61 (168)	6.50 (165)	16.3 (415)	16.5 (418)	8.46 (215)	6.50 (165.1)

Table 12: Flange Options and Dimensions for 2 in. (50.8 mm) Bore Size (Ball/Needle)

Flange Size	ASME Class	Dimensions, in. (mm)						
		A	B	C	L		∅D	∅E
					RF Flange	RJ Flange		
NPS2 (DN50)	150	17.80 (452)	6.63 (169)	5.94 (151)	15.35 (390)	15.8 (403)	5.91 (150)	4.75 (120.7)
	300			6.10 (155)	15.67 (398)	15.67 (398)	6.49 (165)	5.00 (127.0)
	600			6.38 (162)	16.38 (416)	16.5 (419)		
	900/1500			7.68 (195)	19.69 (500)	19.69 (500)	8.46 (215)	6.50 (165.1)
NPS3 (DN80)	150			6.14 (156)	15.7 (400)	16.3 (413)	7.48 (190)	6.0 (152.4)
	300			6.34 (161)	16.1 (410)	16.1 (410)	8.27 (210)	6.63 (168.3)
	600			6.61 (168)	16.9 (428)	17.0 (431)		
	900			7.68 (195)	19.69 (500)	19.69 (500)	9.45 (240)	7.50 (190.5)
	1500			8.27 (210)	20.87 (530)	20.87 (530)	10.43 (265)	8.0 (203.2)

Ordering Number Description

DBBSS - 1BBN1 - FM16300 - FNS8 - V8 - FGSF2 - IE

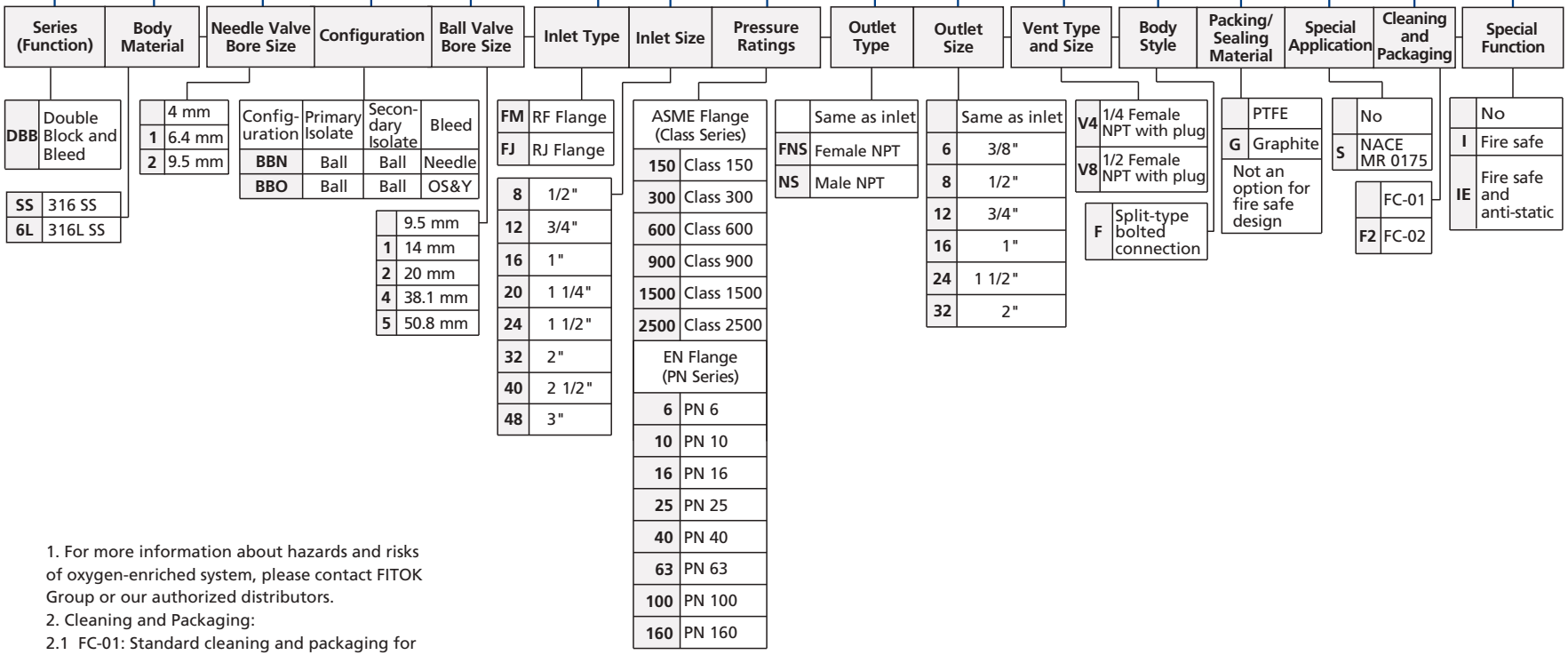

1. For more information about hazards and risks of oxygen-enriched system, please contact FITOK Group or our authorized distributors.
2. Cleaning and Packaging:
2.1 FC-01: Standard cleaning and packaging for general industrial procedures.
2.2 FC-02: Special cleaning and packaging for wetted system components to ensure compliance with product cleanliness requirement as stated in ASTM G93 Level C.

Wafer Type Flange Block and Bleed Valves

Features

◎ Smooth transition from the process piping system to instrumentation in a single configuration
◎ 1/2 female NPT standard outlet
◎ 1/2 female NPT standard vent with plug

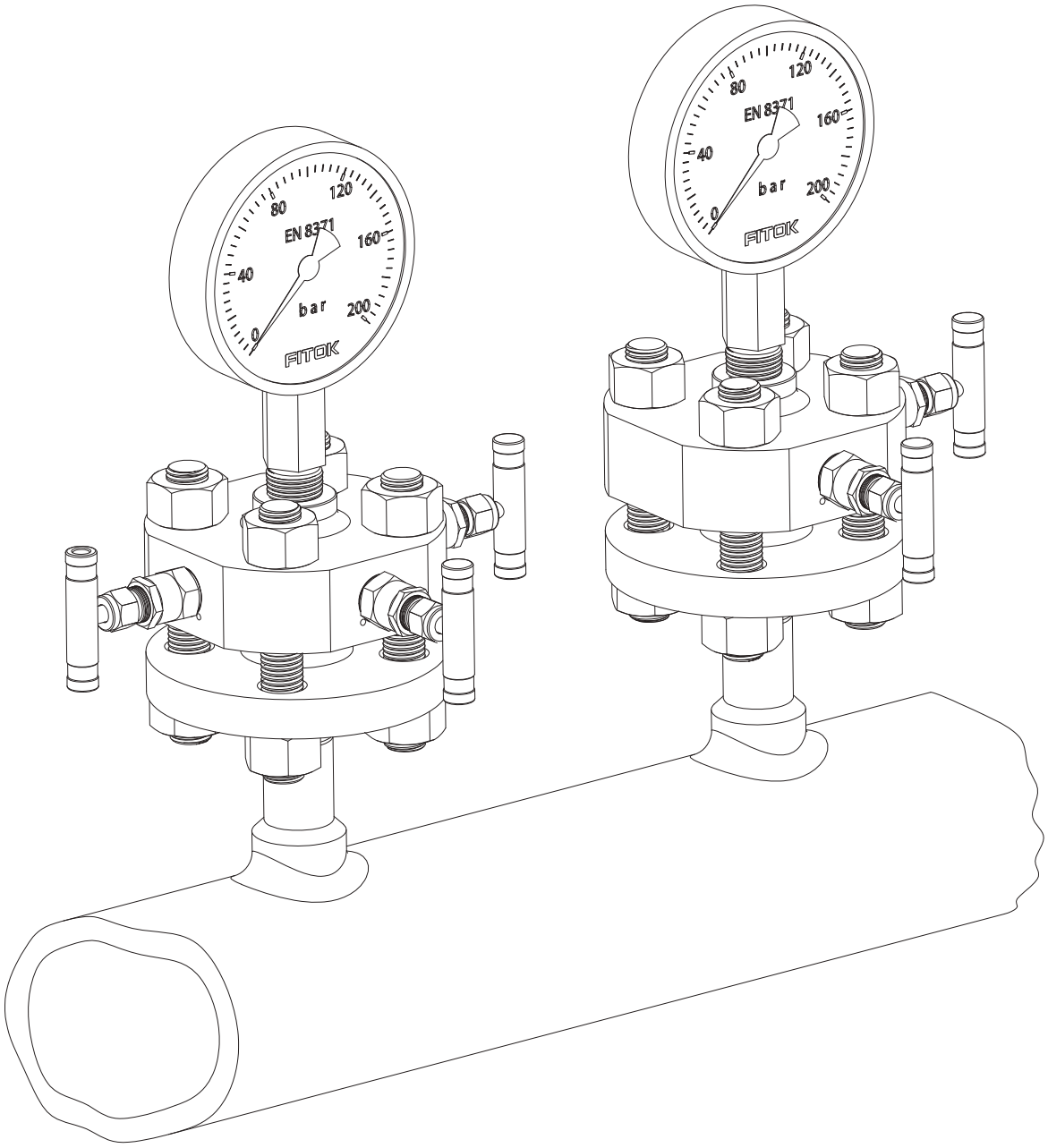

Types and Dimensions

Double Block and Bleed Valves (DBB)

◎ Configuration (NNN): needle isolate, needle isolate, needle vent 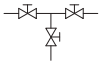 Connection: Flange+Thread

Basic Ordering Information	Inlet/Process Connection	Outlet/Instrument Connection	Bleed/Vent	Dimensions
DBB□□-NNN-MM□□□□-FNS8-V8	RF Flange	1/2 Female NPT	1/2 Female NPT	See Table 13
DBB□□-NNN-MJ□□□□-FNS8-V8	RJ Flange	1/2 Female NPT	1/2 Female NPT	

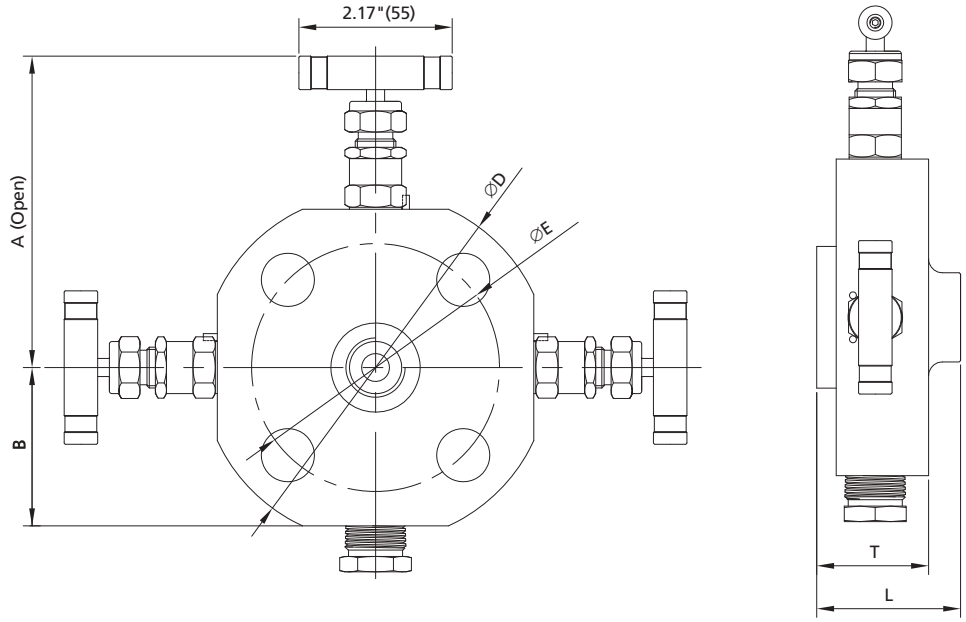

◎ Configuration (ONN): OS&Y isolate, needle isolate, needle vent 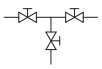 Connection: Flange+Thread

Basic Ordering Information	Inlet/Process Connection	Outlet/Instrument Connection	Bleed/Vent	Dimensions
DBB□□-ONN-MM□□□□-FNS8-V8	RF Flange	1/2 Female NPT	1/2 Female NPT	See Table 14
DBB□□-ONN-MJ□□□□-FNS8-V8	RJ Flange	1/2 Female NPT	1/2 Female NPT	

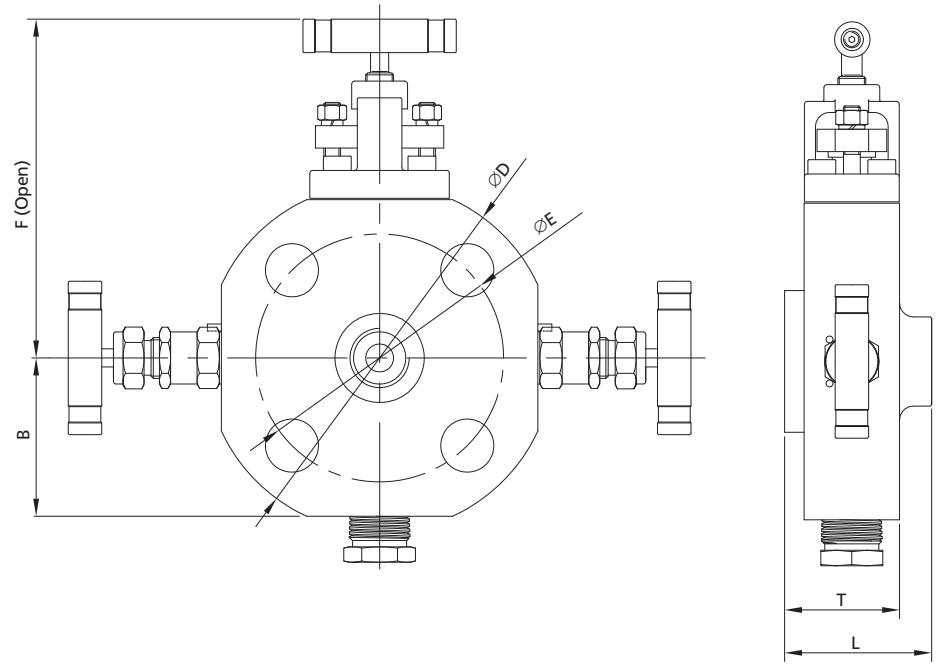

FITOK

Single Block and Bleed Valves (BB)

◎ Configuration (NN): needle isolate, needle vent  Connection: Flange+Thread

Basic Ordering Information	Inlet/Process Connection	Outlet/Instrument Connection	Bleed/Vent	Dimensions
BB□□-NN-MM□□□□-FNS8-V8	RF Flange	1/2 Female NPT	1/2 Female NPT	See Table 13
BB□□-NN-MJ□□□□-FNS8-V8	RJ Flange	1/2 Female NPT	1/2 Female NPT	

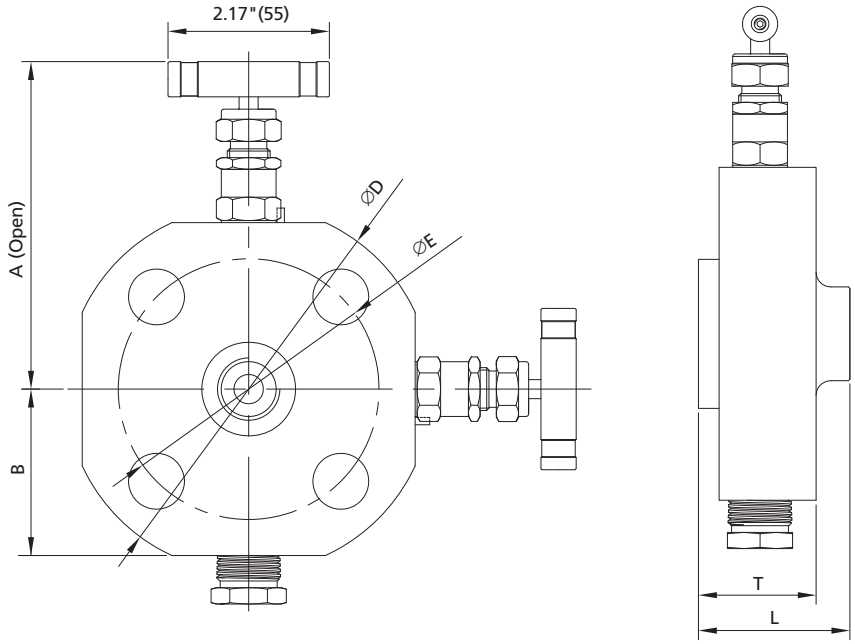

◎ Configuration (ON): OS&Y isolate, needle vent  Connection: Flange+Thread

Basic Ordering Information	Inlet/Process Connection	Outlet/Instrument Connection	Bleed/Vent	Dimensions
BB□□-ON-MM□□□□-FNS8-V8	RF Flange	1/2 Female NPT	1/2 Female NPT	See Table 14
BB□□-ON-MJ□□□□-FNS8-V8	RJ Flange	1/2 Female NPT	1/2 Female NPT	

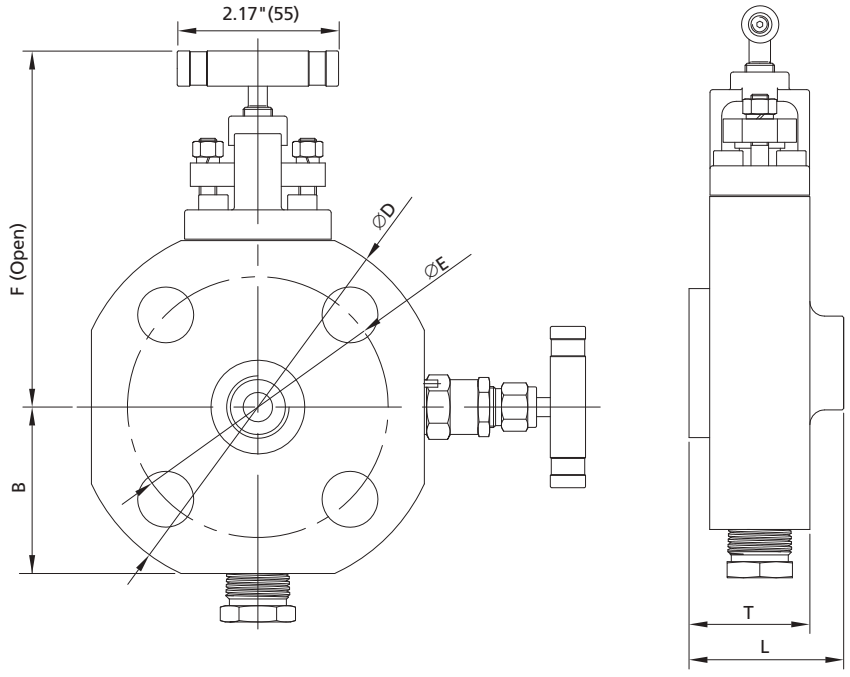

Double Block Valves (DB)

◎ Configuration (NN): needle primary, needle secondary Connection: Flange+Thread

Basic Ordering Information	Inlet/Process Connection	Outlet/Instrument Connection	Bleed/Vent	Dimensions
DB□□-NN-MM□□□□-FNS8	RF Flange	1/2 Female NPT	/	See Table 13
DB□□-NN-MJ□□□□-FNS8	RJ Flange	1/2 Female NPT	/	

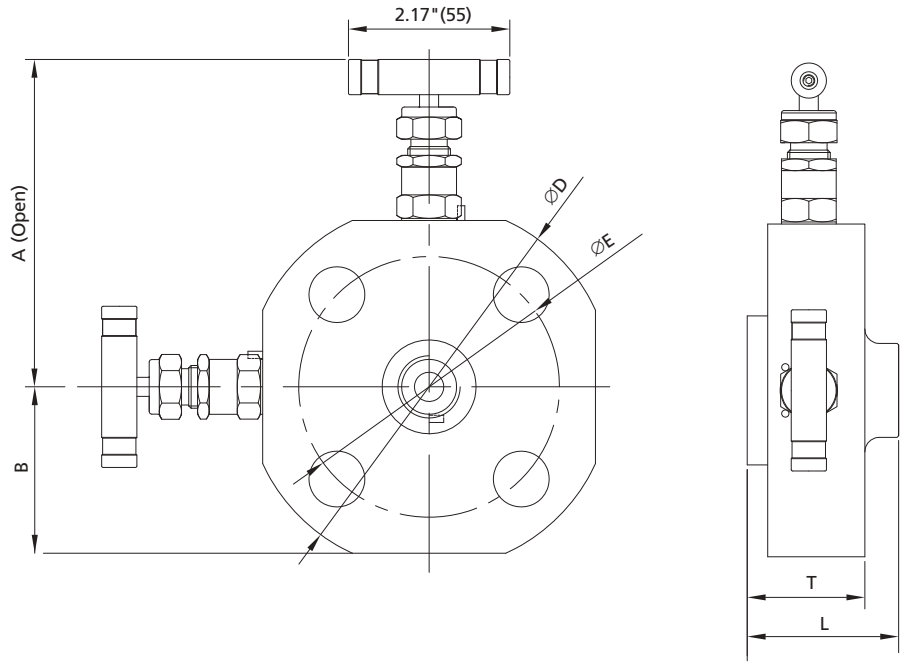

◎ Configuration (ON): OS&Y primary , needle secondary Connection: Flange+Thread

Basic Ordering Information	Inlet/Process Connection	Outlet/Instrument Connection	Bleed/Vent	Dimensions
DB□□-ON-MM□□□□-FNS8	RF Flange	1/2 Female NPT	/	See Table 14
DB□□-ON-MJ□□□□-FNS8	RJ Flange	1/2 Female NPT	/	

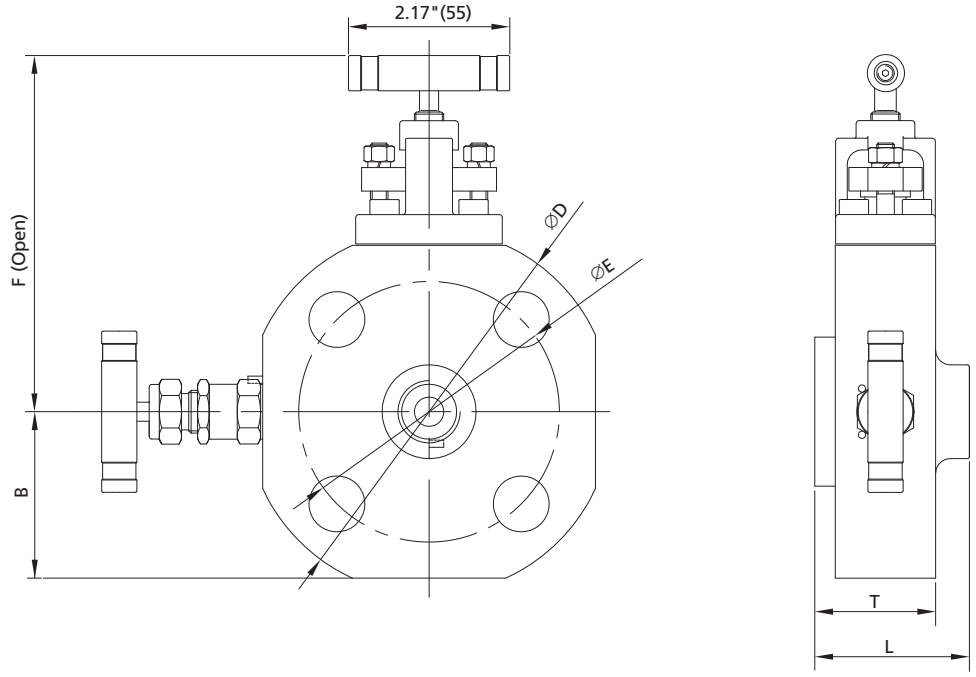

Single Block Valves (SB)

◎ Configuration (N): needle isolate, with vent port  Connection: Flange+Thread

Basic Ordering Information	Inlet/Process Connection	Outlet/Instrument Connection	Bleed/Vent	Dimensions
SB□□-N-MM□□□□-FNS8-V8	RF Flange	1/2 Female NPT	1/2 Female NPT	See Table 13
SB□□-N-MJ□□□□-FNS8-V8	RJ Flange	1/2 Female NPT	1/2 Female NPT	

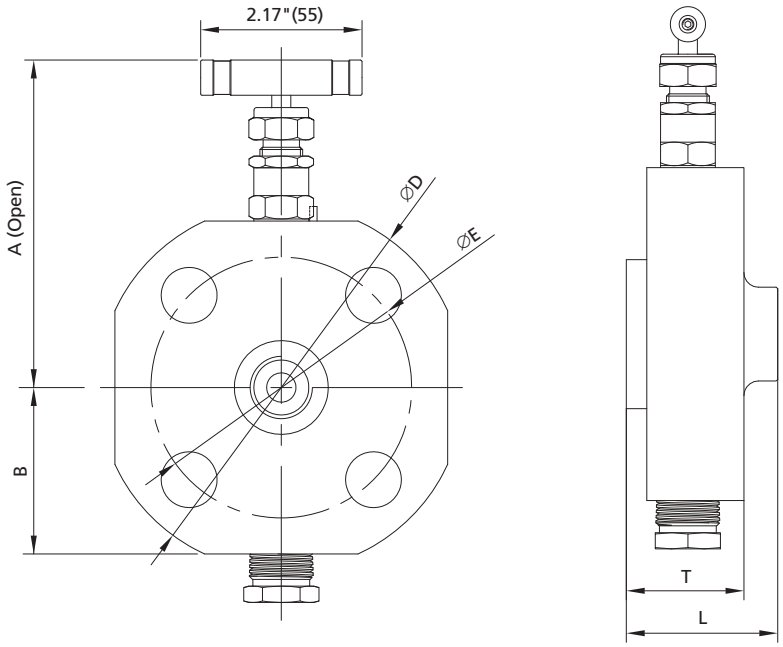

◎ Configuration (O): OS&Y isolate, with vent port  Connection: Flange+Thread

Basic Ordering Information	Inlet/Process Connection	Outlet/Instrument Connection	Bleed/Vent	Dimensions
SB□□-O-MM□□□□-FNS8-V8	RF Flange	1/2 Female NPT	1/2 Female NPT	See Table 14
SB□□-O-MJ□□□□-FNS8-V8	RJ Flange	1/2 Female NPT	1/2 Female NPT	

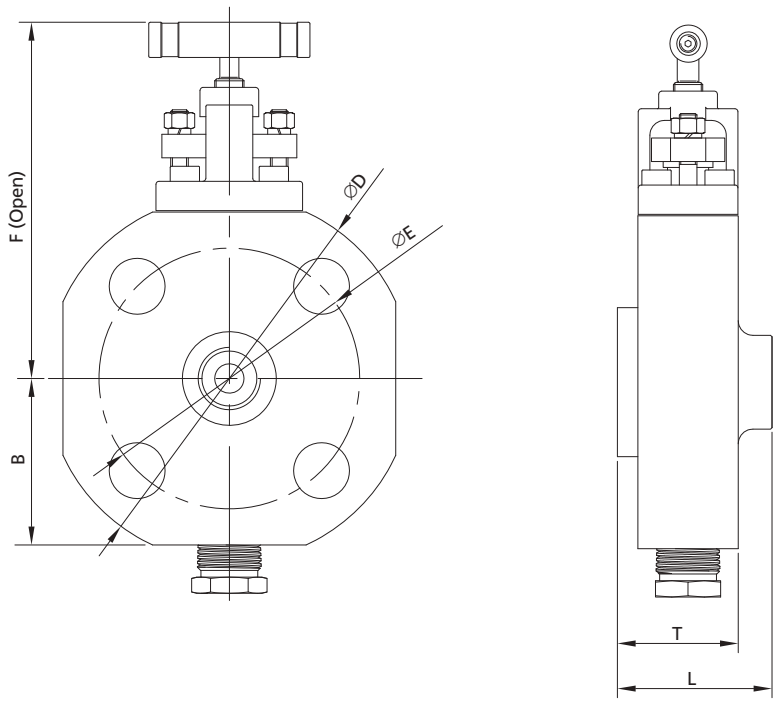

Table 13: Flange Options and Dimensions for 1/8 in. (4mm) Bore Size (Ball/Needle), configuration: N

Flange Size	ASME Class	Dimensions, in. (mm)							
		A	B	RF Flange		RJ Flange		∅D	∅E
				L	T	L	T		
NPS1/2 (DN15)	150	3.94 (100.0)	1.57 (40.0)	1.73 (44.0)	1.24 (31.5)	—	—	3.54 (90)	2.37 (60.3)
	300	4.04 (102.5)	1.67 (42.5)			1.79 (45.5)	1.30 (33.0)	3.74 (95)	2.63 (66.7)
	600				1.32 (33.5)				
	900/1500	4.53 (115.0)	2.17 (55.0)	1.73 (44.0)	1.32 (33.5)	1.79 (45.5)	1.30 (33.0)	4.72 (120)	3.25 (82.6)
	2500	4.82 (122.5)	2.46 (62.5)	1.93 (48.9)	1.51 (38.4)	1.93 (48.9)	1.51 (38.4)	5.31 (135)	3.50 (88.9)
NPS3/4 (DN20)	150	4.13 (105.0)	1.77 (45.0)	1.73 (44.0)	1.24 (31.5)	—	—	3.94 (100)	2.75 (69.9)
	300	4.43 (112.5)	2.07 (52.5)			1.79 (45.5)	1.30 (33.0)	4.53 (115)	3.25 (82.6)
	600				1.32 (33.5)				
	900/1500	4.72 (120.0)	2.36 (60.0)	1.73 (44.0)	1.32 (33.5)	1.79 (45.5)	1.38 (35.0)	5.12 (130)	3.50 (88.9)
	2500	4.92 (125.0)	2.56 (65.0)	2.00 (50.9)	1.59 (40.4)	2.00 (50.9)	1.59 (40.4)	5.51 (140)	3.75 (95.2)
NPS1 (DN25)	150	4.33 (110.0)	1.97 (50.0)	1.73 (44.0)	1.24 (31.5)	1.79 (45.5)	1.30 (33.0)	4.33 (110)	3.13 (79.4)
	300	4.63 (117.5)	2.26 (57.5)					4.92 (125)	3.50 (88.9)
	600				1.32 (33.5)				
	900/1500	5.12 (130.0)	2.76 (70.0)	2.00 (50.9)	1.51 (38.4)	2.00 (50.9)	1.51 (38.4)	5.91 (150)	4.00 (101.6)
	2500	5.31 (135.0)	2.95 (75.0)	2.00 (50.9)	1.71 (43.4)	2.00 (50.9)	1.71 (43.4)	6.30 (160)	4.25 (108.0)
NPS1-1/2 (DN40)	150	4.63 (117.5)	2.26 (57.5)	1.73 (44.0)	1.24 (31.5)	1.79 (45.5)	1.30 (33.0)	4.92 (125)	3.87 (98.4)
	300	5.22 (132.5)	2.85 (72.5)	1.81 (46.0)	1.32 (33.5)	1.87 (47.5)	1.38 (35.0)	6.10 (155)	4.50 (114.3)
	600								
	900/1500	5.71 (145.0)	3.37 (85.0)	2.08 (52.9)	1.59 (40.4)	2.08 (52.9)	1.59 (40.4)	7.09 (180)	4.87 (123.8)
	2500	6.20 (157.5)	3.84 (97.5)	2.38 (60.4)	2.16 (54.9)	2.38 (60.4)	2.16 (54.9)	8.07 (205)	5.75 (146)
NPS2 (DN50)	150	5.12 (130.0)	2.76 (70.0)	1.81 (46.0)	1.24 (31.5)	1.87 (47.5)	1.30 (33.0)	5.91 (150)	4.75 (120.7)
	300	5.41 (137.5)	3.05 (77.5)	1.89 (48.0)	1.32 (33.5)	1.95 (49.5)	1.38 (35.0)	6.49 (165)	5.00 (127.0)
	600								
	900/1500	6.30 (160.0)	3.94 (100.0)	2.38 (60.4)	1.89 (47.9)	2.38 (60.4)	1.89 (47.9)	8.46 (215)	6.50 (165.1)
	2500	6.50(165.0)	4.13 (105.0)	2.59 (65.9)	2.44 (61.9)	2.59 (65.9)	2.44 (61.9)	9.25 (235)	6.75 (171.4)

Note: For wafer-type flange block and bleed valves with 1/4 in. (6.35 mm), 3/8 in. (9.5 mm) bore, please contact FITOK Group or our authorized distributors.

Table 14: Flange Options and Dimensions for 1/8 in. (4mm) Bore Size (Needle), configuration: O

Flange Size	ASME Class	Dimensions, in. (mm)							
		F	B	RF Flange		RJ Flange		∅D	∅E
				L	T	L	T		
NPS1/2 (DN15)	150	4.33 (110.0)	1.57 (40.0)	2.03 (51.6)	1.58 (40.1)	—	—	3.54 (90)	2.37 (60.3)
	300	4.43 (112.5)	1.67 (42.5)			2.03 (51.6)	1.58 (40.1)	3.74 (95)	2.63 (66.7)
	600								
	900/1500	4.92 (125.0)	2.17 (55.0)					4.72 (120)	3.25 (82.6)
	2500	5.22 (132.5)	2.46 (62.5)					5.31 (135)	3.50 (88.9)
NPS3/4 (DN20)	150	4.53 (115.0)	1.77 (45.0)	2.03 (51.6)	1.58 (40.1)	—	—	3.94 (100)	2.75 (69.9)
	300	4.82 (122.5)	2.07 (52.5)			2.03 (51.6)	1.58 (40.1)	4.53 (115)	3.25 (82.6)
	600								
	900/1500	5.12 (130.0)	2.36 (60.0)					5.12 (130)	3.50 (88.9)
	2500	5.31 (135.0)	2.56 (65.0)	2.11 (53.5)	1.65 (42.0)	2.11 (53.5)	1.65 (42.0)	5.51 (140)	3.75 (95.2)
NPS1 (DN25)	150	4.72 (120.0)	1.97 (50.0)	2.03 (51.6)	1.58(40.1)	2.03 (51.6)	1.58 (40.1)	4.33 (110)	3.13 (79.4)
	300	5.02 (127.5)	2.26 (57.5)					4.92 (125)	3.50 (88.9)
	600								
	900/1500	5.51 (140.0)	2.76 (70.0)	2.11 (53.5)	1.65 (42.0)	2.11 (53.5)	1.65 (42.0)	5.91 (150)	4.00 (101.6)
	2500	5.71 (145.0)	2.95 (75.0)					6.30 (160)	4.25 (108.0)
NPS1-1/2 (DN40)	150	5.02 (127.5)	2.26 (57.5)	2.03 (51.6)	1.58 (40.1)	2.03 (51.6)	1.58 (40.1)	4.92 (125)	3.87 (98.4)
	300	5.61 (142.5)	2.85 (72.5)	2.11 (53.5)	1.65 (42.0)	2.11 (53.5)	1.65 (42.0)	6.10 (155)	4.50 (114.3)
	600								
	900/1500	6.10 (155.0)	3.37 (85.0)	2.19 (55.5)	1.59 (44.0)	2.19 (55.5)	1.59 (44.0)	7.09 (180)	4.87 (123.8)
	2500	6.59 (167.5)	3.84 (97.5)	2.67 (67.9)	2.22 (56.4)	2.67 (67.9)	2.22 (56.4)	8.07 (205)	5.75 (146)
NPS2 (DN50)	150	5.51 (140.0)	2.76 (70.0)	2.11 (53.5)	1.65 (42.0)	2.11 (53.5)	1.65 (42.0)	5.91 (150)	4.75 (120.7)
	300	5.81 (147.5)	3.05 (77.5)	2.19 (55.5)	1.73 (44.0)	2.19 (55.5)	1.73 (44.0)	6.49 (165)	5.00 (127.0)
	600								
	900/1500	6.69 (170.0)	3.94 (100.0)	2.42 (61.5)	1.97 (50.0)	2.42 (61.5)	1.97 (50.0)	8.46 (215)	6.50 (165.1)
	2500	6.89 (175.0)	4.13 (105.0)	2.88 (73.4)	2.44 (61.9)	2.88 (73.4)	2.44 (61.9)	9.25 (235)	6.75 (171.4)

Ordering Number Description

DBBSS - 1NNN - MM16300 - FNS8 - V8 - XGSF2

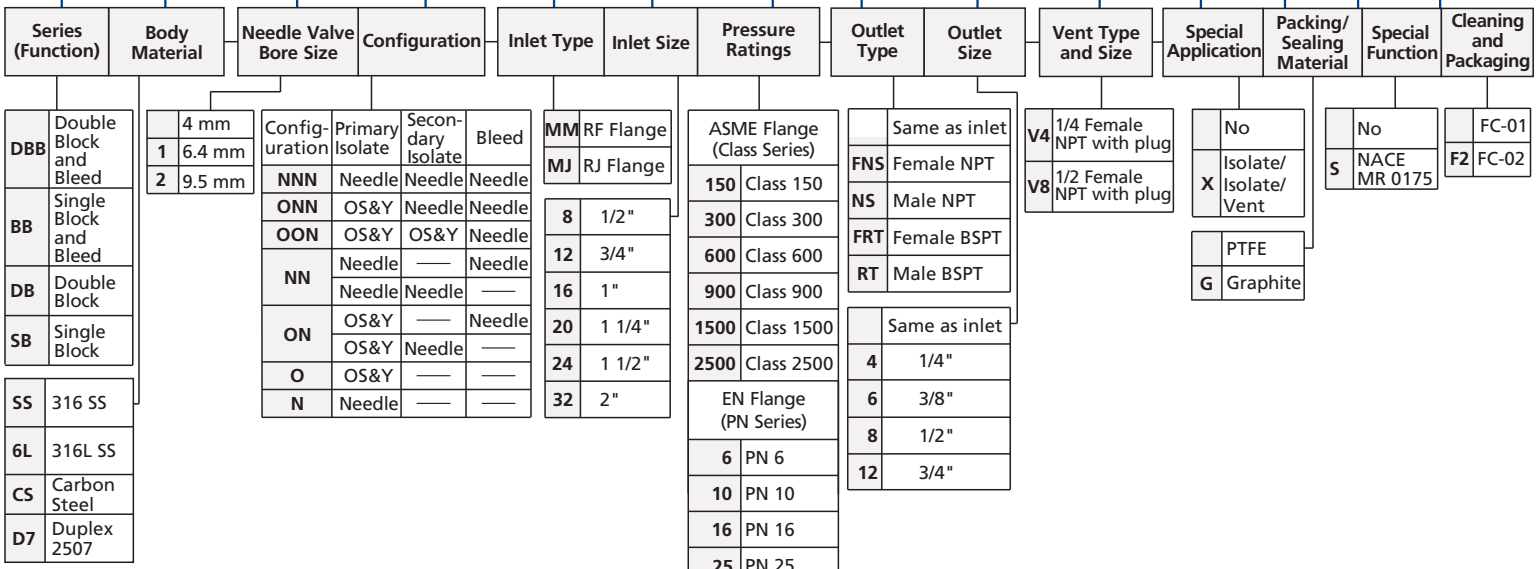

1. For more information about hazards and risks of oxygen-enriched system, please contact FITOK Group or our authorized distributors.
2. Cleaning and Packaging:
2.2 FC-01: Standard cleaning and packaging for general industrial procedures.
2.2 FC-02: Special cleaning and packaging for wetted system components to ensure compliance with product cleanliness requirement as stated in ASTM G93 Level C.
3. If there is a bypass outlet in addition to the vent port (with valve), the following designators apply:
V4V8: V8 for 1/2 Female NPT vent, V4 for 1/4 Female NPT bypass outlet.
V8V4: V4 for 1/4 Female NPT vent, V8 for 1/2 Female NPT bypass outlet.
2V4: 1/4 Female NPT vent and 1/4 Female NPT bypass outlet.
2V8: 1/2 Female NPT vent and 1/2 Female NPT bypass outlet.

Butt-welded Type Block and Bleed Valves

Features

◎ Available directly welded to the vessel or process pipe
◎ Weld inlet connection sizes from NPS 1/2 to NPS 2
◎ 1/2 female NPT standard vent with plug

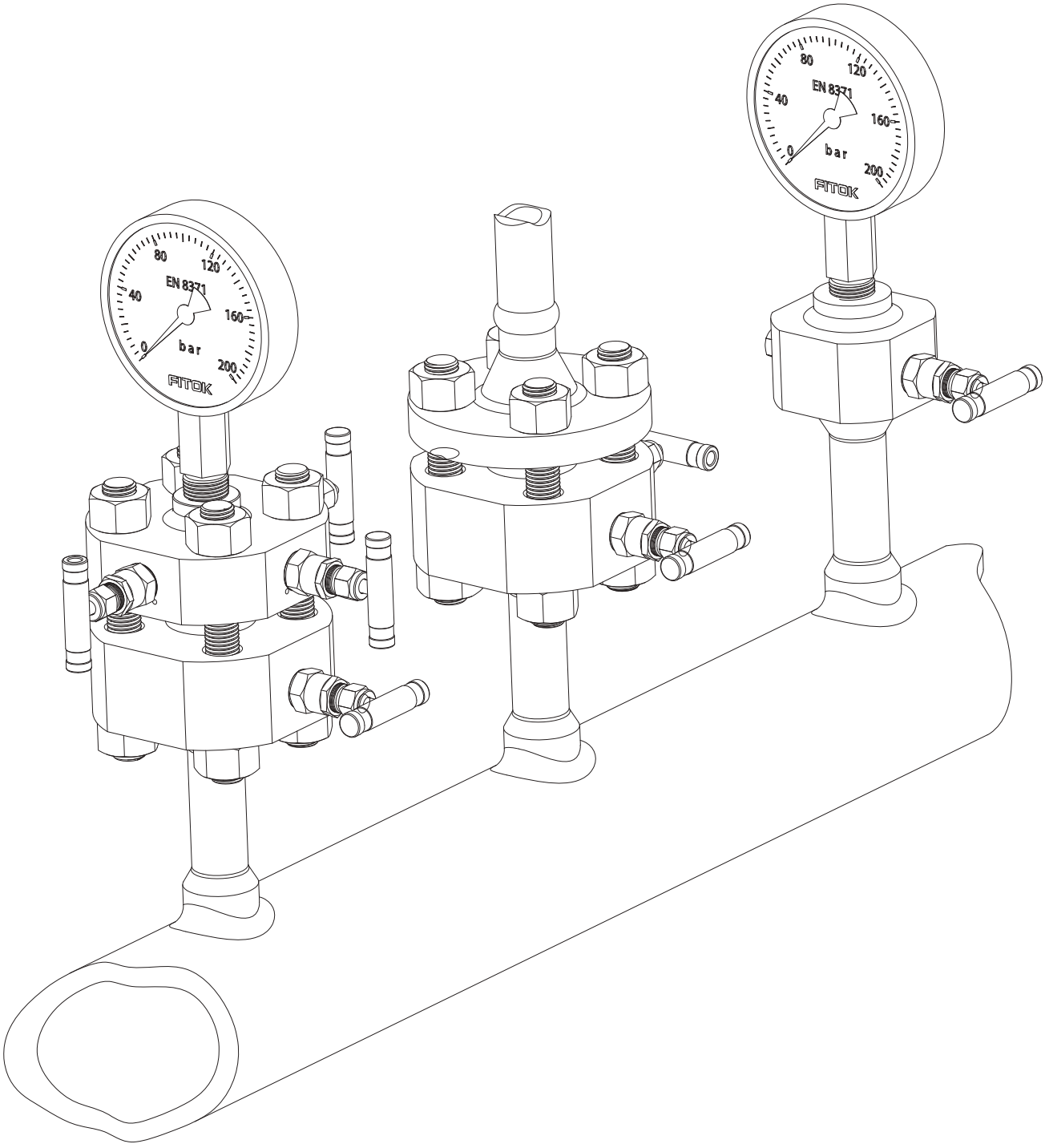

Valve Types and Dimensions

Single Block Valves (BB Series)

◎ Configuration (NN): needle isolate, needle vent  Connection: BWE+Flange

Basic Ordering Information	Inlet/Process Connection	Outlet/Instrument Connection	Bleed/Vent	Dimensions
BB□□-NN-BWE□-MM□□□□-V8	Butt Welding Branch	RF Flange	1/2 Female NPT	See Table 15
BB□□-NN-BWE□-MJ□□□□-V8	Butt Welding Branch	RJ Flange	1/2 Female NPT	

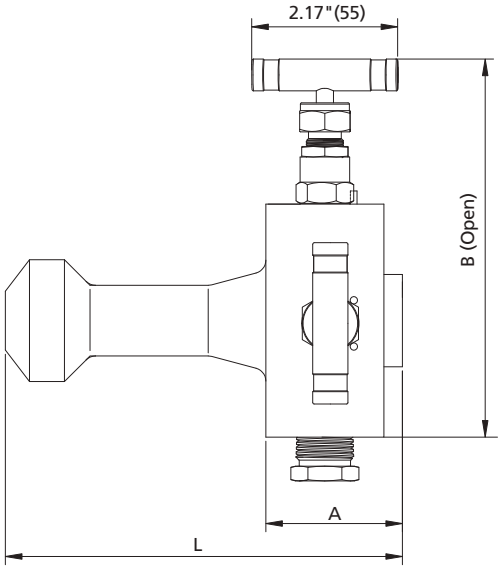

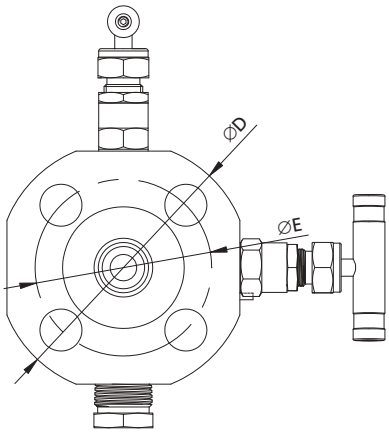

◎ Configuration (ON): OS&Y isolate, needle vent  Connection: BWE+Flange

Basic Ordering Information	Inlet/Process Connection	Outlet/Instrument Connection	Bleed/Vent	Dimensions
BB□□-ON-BWE□-MM□□□□-V8	Butt Welding Branch	RF Flange	1/2 Female NPT	See Table 15
BB□□-ON-BWE□-MJ□□□□-V8	Butt Welding Branch	RJ Flange	1/2 Female NPT	

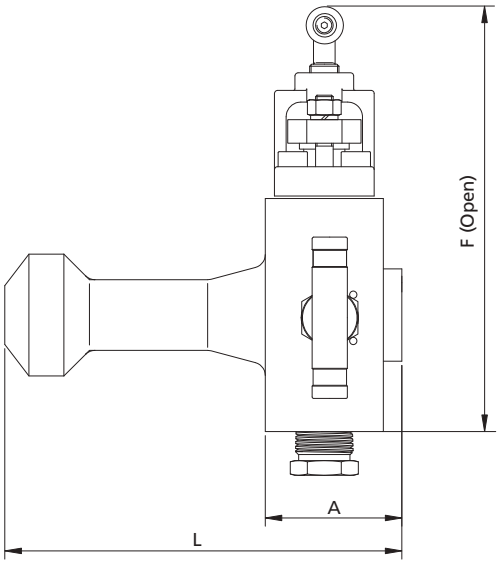

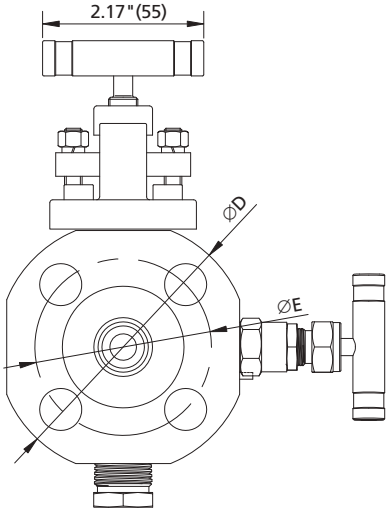

Single Block Valves (SB)

◎ Configuration (O): OS&Y isolate, with vent port  Connection: BWE+Flange

Basic Ordering Information	Inlet/Process Connection	Outlet/Instrument Connection	Bleed/Vent	Dimensions
SB□□-O-BWE□-MM□□□□-V8	Butt Welding Branch	RF Flange	1/2 Female NPT	See Table 15
SB□□-O-BWE□-MJ□□□□-V8	Butt Welding Branch	RJ Flange	1/2 Female NPT	

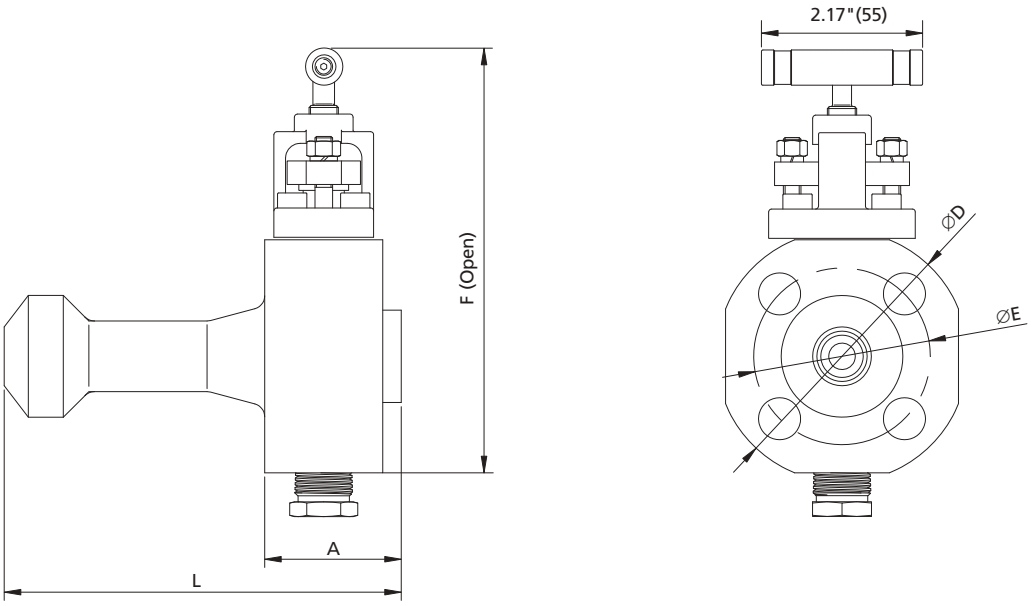

◎ Configuration (N): needle isolate, with vent port  Connection: BWE+Flange

Basic Ordering Information	Inlet/Process Connection	Outlet/Instrument Connection	Bleed/Vent	Dimensions
SB□□-□N-BWE□-MM□□□□-V8	Butt Welding Branch	RF Flange	1/2 Female NPT	See Tables 15-17
SB□□-□N-BWE□-MJ□□□□-V8	Butt Welding Branch	RJ Flange	1/2 Female NPT	

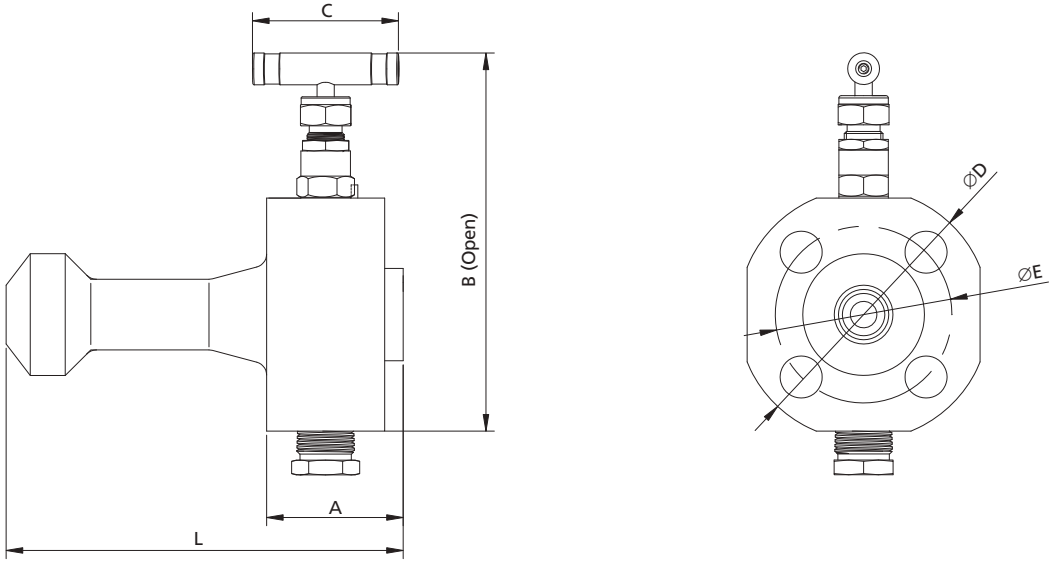

◎ Configuration (N): needle isolate, with vent port  Connection: BWE+Thread

Basic Ordering Information	Inlet/Process Connection	Outlet/Instrument Connection	Bleed/Vent
SB□□-N-BWE12-FNS8-V8	Butt Welding Branch	1/2 Female NPT	1/2 Female NPT

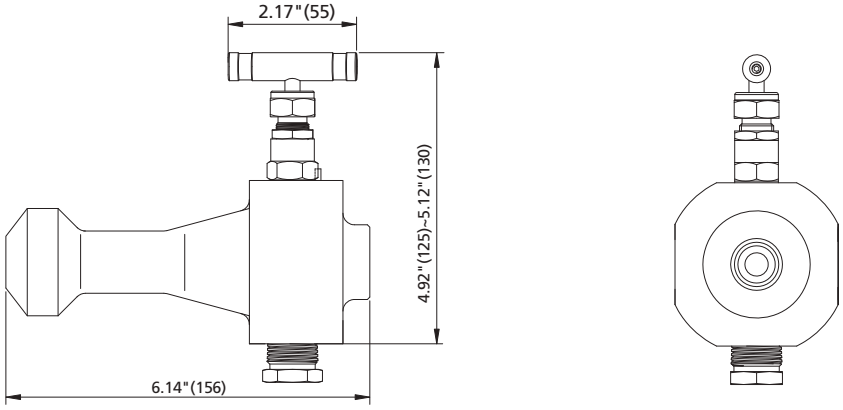

Basic Ordering Information	Inlet/Process Connection	Outlet/Instrument Connection	Bleed/Vent
SB□□-1N-BWE12-FNS8-V8	Butt Welding Branch	1/2 Female NPT	1/2 Female NPT

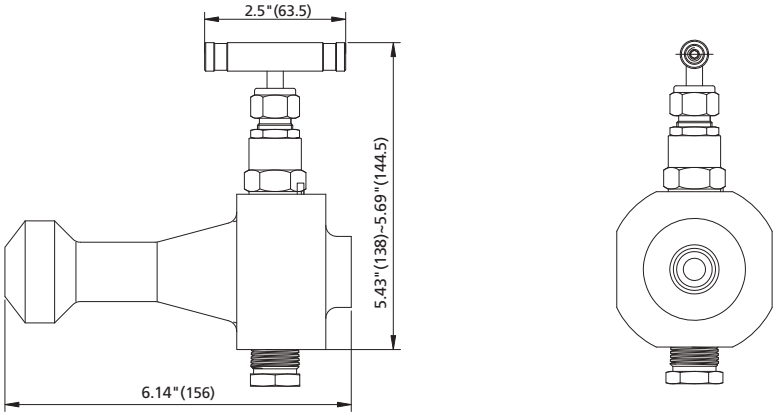

Basic Ordering Information	Inlet/Process Connection	Outlet/Instrument Connection	Bleed/Vent
SB□□-2N-BWE12-FNS8-V8	Butt Welding Branch	1/2 Female NPT	1/2 Female NPT

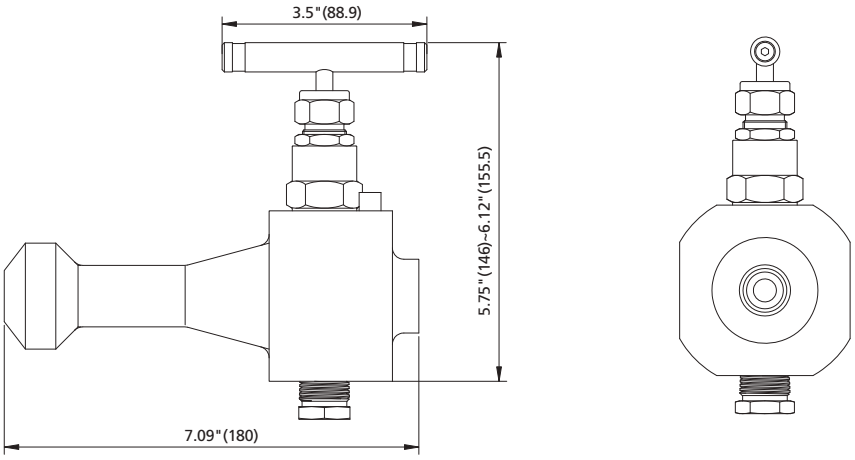

Table 15: Flange Options and Dimensions for 1/8 in. (4 mm) Bore Size (Needle)

Flange Size	ASME Class	Dimensions, in. (mm)						
		A	B	F	C	L RF/RJ Flange	∅D	∅E
NPS1/2 (DN15)	150	2.0 (50.8)	5.51 (140)	5.91 (150)	2.17 (55)	6.14 (156)	3.54 (90)	2.37 (60.3)
	300		5.71 (145)	6.10 (155)			3.74 (95)	2.63 (66.7)
	600	2.03 (51.6)				5.91 (150)		
	900/1500	1.85 (47)	6.69 (170)	7.09 (180)			4.72 (120)	3.25 (82.6)
	2500	2.07 (52.6)	7.28 (185)	7.68 (195)		6.14 (156)	5.31 (135)	3.50 (88.9)
NPS3/4 (DN20)	150	2.0 (50.8)	5.91 (150)	6.30 (160)			3.94 (100)	2.75 (69.9)
	300	2.03 (51.6)	6.50 (165)	6.89 (175)			4.53 (115)	3.25 (82.6)
	600							
	900/1500		7.09 (180)	7.48 (190)			5.12 (130)	3.50 (88.9)
	2500		7.48 (190)	7.87 (200)			5.51 (140)	3.75 (95.2)
NPS1 (DN25)	150		6.30 (160)	6.69 (170)			4.33 (110)	3.13 (79.4)
	300		6.89 (175)	7.28 (185)			4.92 (125)	3.50 (88.9)
	600							
	900/1500		7.87 (200)	8.27 (210)			5.91 (150)	4.00 (101.6)
	2500	2.11 (53.6)	8.27 (210)	8.66 (220)			6.30 (160)	4.25 (108.0)
NPS1-1/2 (DN40)	150	1.91 (48.6)	6.89 (175)	7.28 (185)		6.93 (176)	4.92 (125)	3.87 (98.4)
	300	2.03 (51.6)	8.07 (205)	8.46 (215)			6.10 (155)	4.50 (114.3)
	600							
	900/1500	2.23 (56.5)	9.06 (230)	9.45 (240)			7.09 (180)	4.87 (123.8)
	2500	2.46 (62.6)	9.84 (250)	10.24 (260)			8.07 (205)	5.75 (146)
NPS2 (DN50)	150	1.95 (49.6)	7.87 (200)	8.27 (210)		7.32 (186)	5.91 (150)	4.75 (120.7)
	300	2.03 (51.6)	8.46 (215)	8.86 (225)			6.49 (165)	5.00 (127.0)
	600							
	900/1500	2.27 (57.6)	10.24 (260)	10.63 (270)			8.46 (215)	6.50 (165.1)
	2500	2.50 (63.6)	10.63 (270)	11.02 (280)			9.25 (235)	6.75 (171.4)

Table 16: Flange Options and Dimensions for 1/4 in. (6.4 mm) Bore Size (Needle)

Flange Size	ASME Class	Dimensions, in. (mm)					
		A	B	C	L RF/RJ Flange	∅D	∅E
NPS1/2 (DN15)	150	2.03 (51.6)	6.08 (154.5)	2.5 (63.5)	6.14 (156)	3.54 (90)	2.37 (60.3)
	300	2.0 (50.8)	6.28 (159.5)			3.74 (95)	2.63 (66.7)
	600						
	900/1500	2.17 (55)	7.26 (184.5)			4.72 (120)	3.25 (82.6)
	2500	2.31 (58.6)	7.85 (199.5)			5.31 (135)	3.50 (88.9)
NPS3/4 (DN20)	150	2.03 (51.6)	6.48 (164.5)		6.34 (161)	3.94 (100)	2.75 (69.9)
	300	2.23 (56.6)	7.07 (179.5)			4.53 (115)	3.25 (82.6)
	600	2.23 (56.6)					
	900/1500	2.31 (58.6)	7.66 (194.5)			5.12 (130)	3.50 (88.9)
	2500	2.39 (60.6)	8.05 (204.5)			5.51 (140)	3.75 (95.2)
NPS1 (DN25)	150	2.03 (51.6)	6.87 (174.5)		6.54 (166)	4.33 (110)	3.13 (79.4)
	300	2.23 (56.6)	7.46 (189.5)			4.92 (125)	3.50 (88.9)
	600	2.23 (56.6)					
	900/1500	2.43 (61.6)	8.44 (214.5)			5.91 (150)	4.00 (101.6)
	2500	2.50 (63.6)	8.84 (224.5)			6.30 (160)	4.25 (108.0)
NPS1-1/2 (DN40)	150	1.91 (48.6)	7.46 (189.5)		6.93 (176)	4.92 (125)	3.87 (98.4)
	300	2.15 (54.6)	8.64 (219.5)			6.10 (155)	4.50 (114.3)
	600	2.15 (54.6)					
	900/1500	2.46 (62.6)	9.63 (244.5)			7.09 (180)	4.87 (123.8)
	2500	2.70 (68.6)	10.41 (264.5)			8.07 (205)	5.75 (146)
NPS2 (DN50)	150	1.95 (49.6)	8.44 (214.5)		7.32 (186)	5.91 (150)	4.75 (120.7)
	300	2.15 (54.6)	9.04 (229.5)			6.49 (165)	5.00 (127.0)
	600	2.15 (54.6)					
	900/1500	2.66 (67.6)	10.81 (274.5)			8.46 (215)	6.50 (165.1)
	2500	2.82 (71.6)	11.20 (284.5)			9.25 (235)	6.75 (171.4)

Table 17: Flange Options and Dimensions for 3/8 in. (9.5 mm) Bore Size (Needle)

Flange Size	ASME Class	Dimensions, in. (mm)					
		A	B	C	L RF/RJ Flange	∅D	∅E
NPS1/2 (DN15)	150	2.36 (60)	7.09 (161.5)	3.5 (88.9)	7.09 (180)	3.54 (90)	2.37 (60.3)
	300		7.20 (166.5)			3.74 (95)	2.63 (66.7)
	600						
	900/1500	2.80 (71)	8.19 (191.5)			4.72 (120)	3.25 (82.6)
	2500	2.83 (72)	8.78 (206.5)			5.31 (135)	3.50 (88.9)
NPS3/4 (DN20)	150	2.40 (61)	7.40 (171.5)			3.94 (100)	2.75 (69.9)
	300	2.68 (68)	7.99 (186.5)			4.53 (115)	3.25 (82.6)
	600						
	900/1500	3.03 (77)	8.58 (201.5)			5.12 (130)	3.50 (88.9)
	2500	3.19 (81)	8.98 (211.5)			5.51 (140)	3.75 (95.2)
NPS1 (DN25)	150	2.60 (66)	7.80 (181.5)			4.33 (110)	3.13 (79.4)
	300	2.80 (71)	8.39 (196.5)			4.92 (125)	3.50 (88.9)
	600	2.83 (72)					
	900/1500	3.23 (82)	9.37 (221.5)			5.91 (150)	4.00 (101.6)
	2500	3.50 (89)	9.76 (231.5)			6.30 (160)	4.25 (108.0)

Ordering Number Description

SBSS - 1NN - BWE12 - MM16300 - V8 - GSF2

Series (Function)	
SB	Single Block
BB	Single Block and Bleed

Body Material	
SS	316 SS
6L	316L SS
CS	Carbon Steel
D7	Duplex 2507

Needle Valve Bore Size	
	4 mm
1	6.4 mm
2	9.5 mm

Config-uration	Isolate	Vent
NN	Needle	Needle
ON	OS&Y	Needle
O	OS&Y	—
N	Needle	—

Inlet Size	
8	1/2"
12	3/4"
16	1"
20	1 1/4"
24	1 1/2"
32	2"

Outlet Type	
FNS	Female NPT
MM	RF Flange
MJ	RTJ Flange

Outlet Size	
8	1/2"
12	3/4"
16	1"
24	1 1/2"
32	2"

Pressure Ratings	
ASME Flange (Class Series)	
150	Class 150
300	Class 300
600	Class 600
900	Class 900
1500	Class 1500
2500	Class 2500
EN Flange (PN Series)	
6	PN 6
10	PN 10
16	PN 16
25	PN 25
40	PN 40
63	PN 63
100	PN 100
160	PN 160

Vent Type and Size	
V4	1/4 Female NPT with plug
V8	1/2 Female NPT with plug

Packing/ Sealing Material	
	PTFE
G	Graphite

Special Application	
	No
S	NACE MR 0175

Cleaning and Packaging	
	FC-01
F2	FC-02

1. For more information about hazards and risks of oxygen-enriched system, please contact FITOK Group or our authorized distributors.
2. Cleaning and Packaging:
2.2 FC-01: Standard cleaning and packaging for general industrial procedures.
2.2 FC-02: Special cleaning and packaging for wetted system components to ensure compliance with product cleanliness requirement as stated in ASTM G93 Level C.
3. If there is a bypass outlet in addition to the vent port (with valve), the following designators apply:
V4V8: V8 for 1/2 Female NPT vent, V4 for 1/4 Female NPT bypass outlet.
V8V4: V4 for 1/4 Female NPT vent, V8 for 1/2 Female NPT bypass outlet.
2V4: 1/4 Female NPT vent and 1/4 Female NPT bypass outlet.
2V8: 1/2 Female NPT vent and 1/2 Female NPT bypass outlet.

Injection Type Block and Bleed Valves

Features

◎ Injection of chemicals and other media into the process stream
◎ A check valve is installed to prevent process fluid from reaching the inlet injection position
◎ The length of the injection nozzle orifice can be manufactured to meet customer requirements

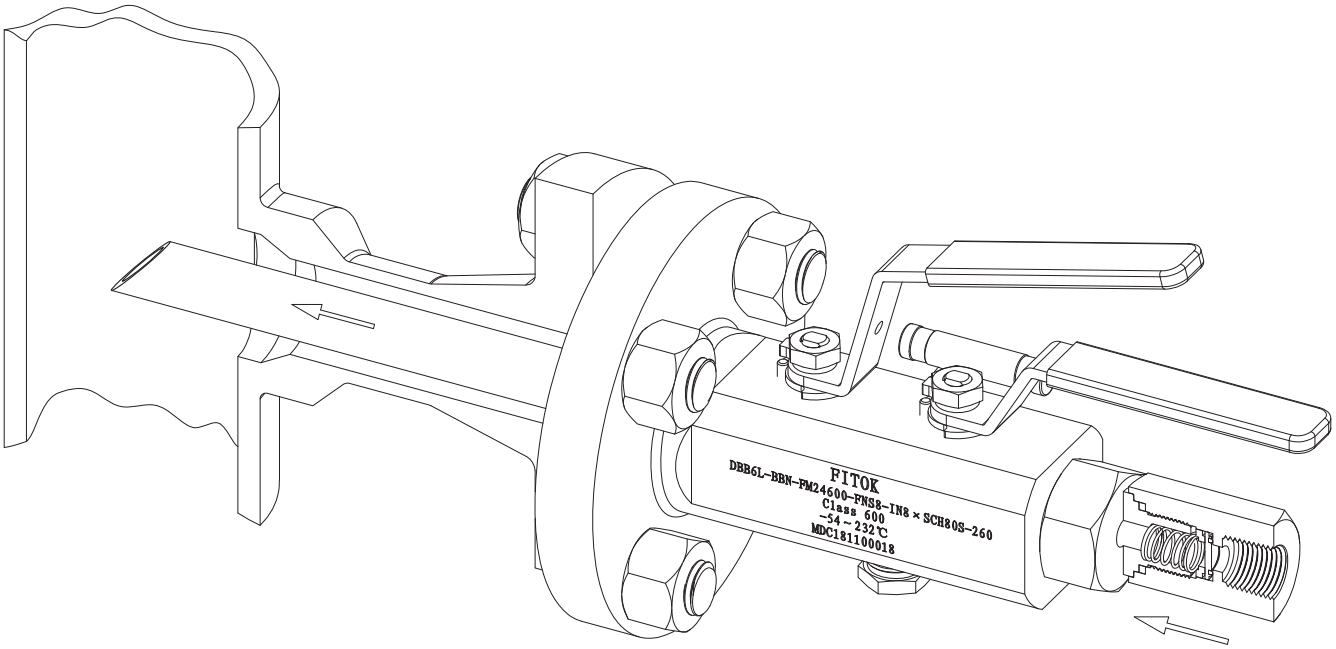

Valve Types and Dimensions

Double Block and Bleed Valves (DBB)

◎ Configuration (BBN): ball isolate, ball isolate, needle vent, check valve at inlet, injection nozzle at outlet
Connection: Flange+Thread

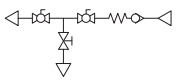

Basic Ordering Information	Inlet/Process Connection	Outlet/Instrument Connection	Bleed/Vent	Dimensions
DBB□□-BBN-FNS□-FM□□□□-V□-IN□□-□	RF Flange	Female NPT	Female NPT	See Tables 1-3
DBB□□-BBN-FNS□-FJ□□□□-V□-IN□□-□	RJ Flange	Female NPT	Female NPT	

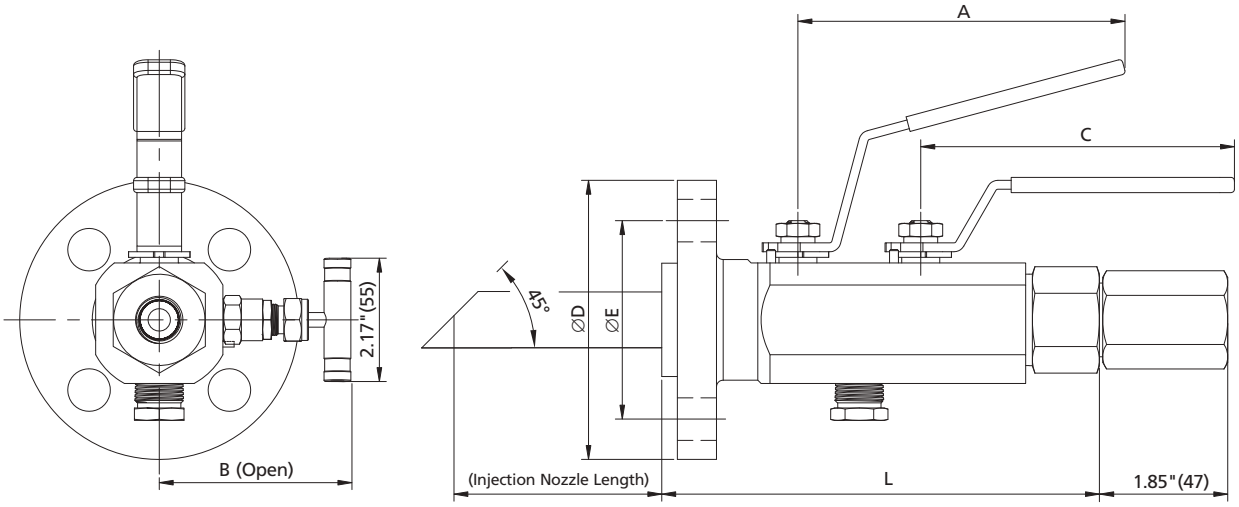

Ordering Number Description

DBBSS - BBN - FNS8 - FM16300 - V8 - INGSM12x2 - 298

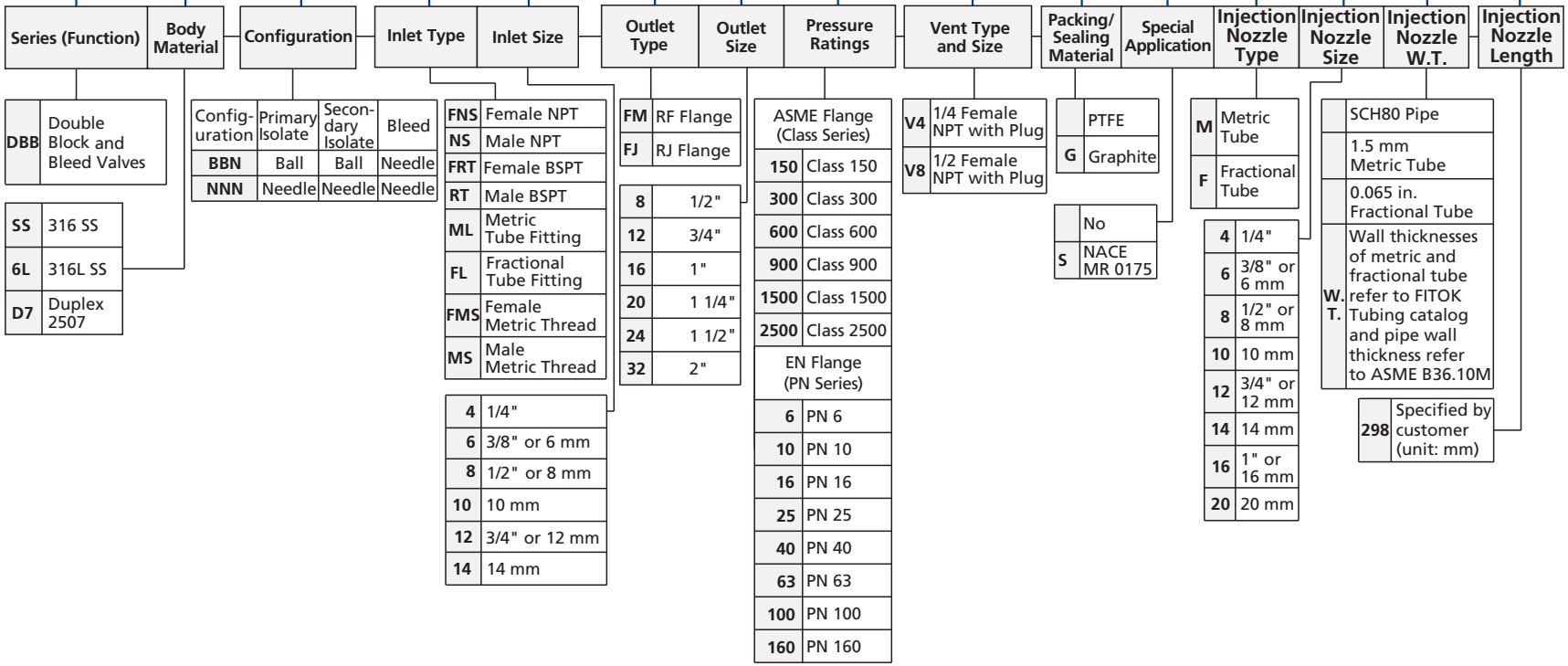

Note: For more information about hazards and risks of oxygen-enriched system, please contact FITOK Group or our authorized distributors.

Sampling Type Block and Bleed Valves

Features

◎ Developed to remove a sample directly from process stream at full system pressure
◎ Customized sampling probe extends from the pipe flange connection for correct sample removal
◎ Sampling probe length is manufactured to meet customer requirements

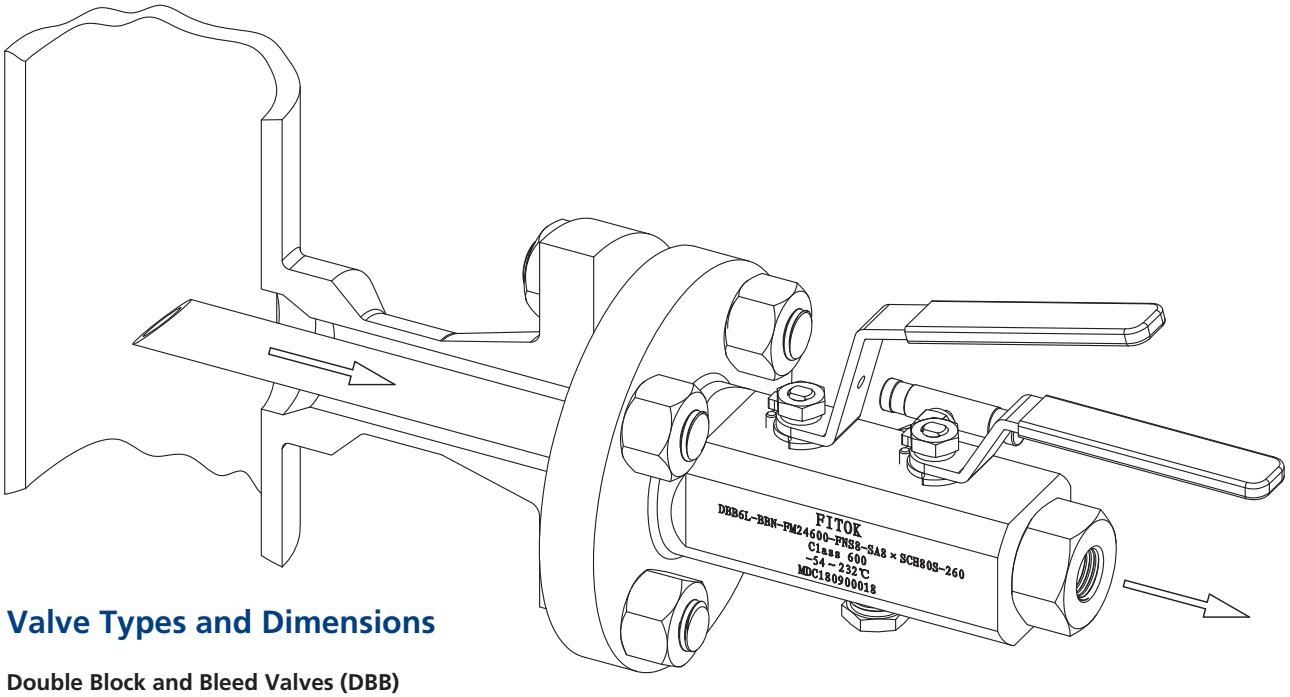

Valve Types and Dimensions

Double Block and Bleed Valves (DBB)

◎ Configuration (BBN): ball isolate, ball isolate, needle vent, sampling probe at inlet 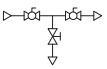 Connection: Thread+Flange

Basic Ordering Information	Inlet/Process Connection	Outlet/Instrument Connection	Bleed/Vent	Dimensions
DBB□□-BBN-FM□□□□-FNS□-V□-SA□-□	RF Flange	Female NPT	Female NPT	See Tables 1-3
DBB□□-BBN-FJ□□□□-FNS□-V□-SA□-□	RJ Flange	Female NPT	Female NPT	

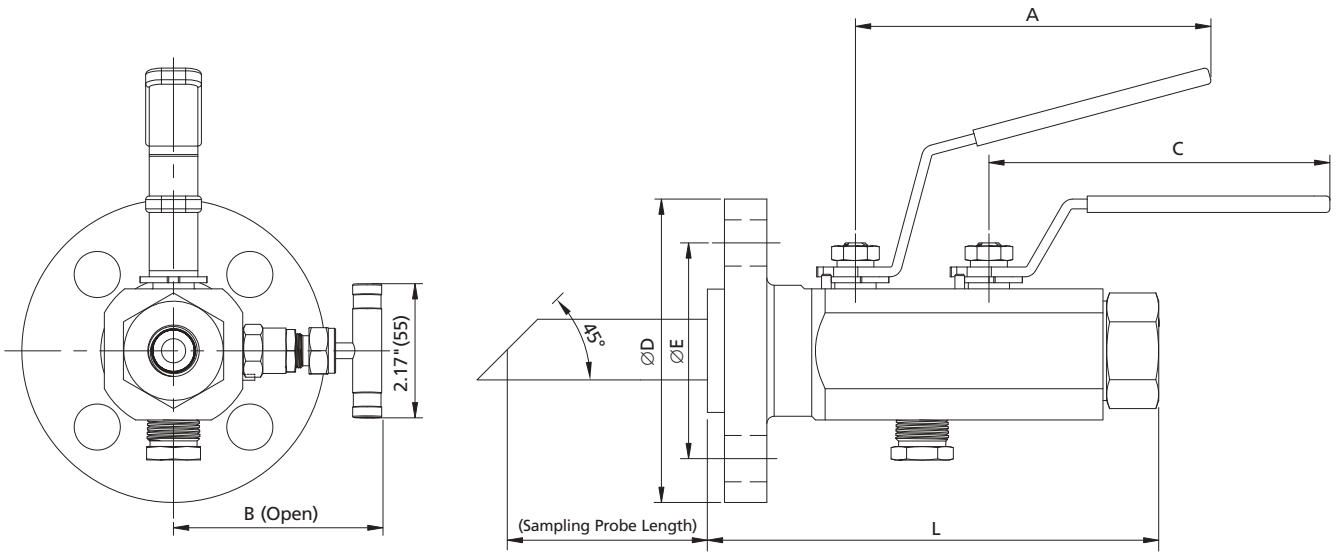

Ordering Number Description

DBBSS - BBN - FM16300 - FNS8 - V8 - SAGSF12x2 - 298

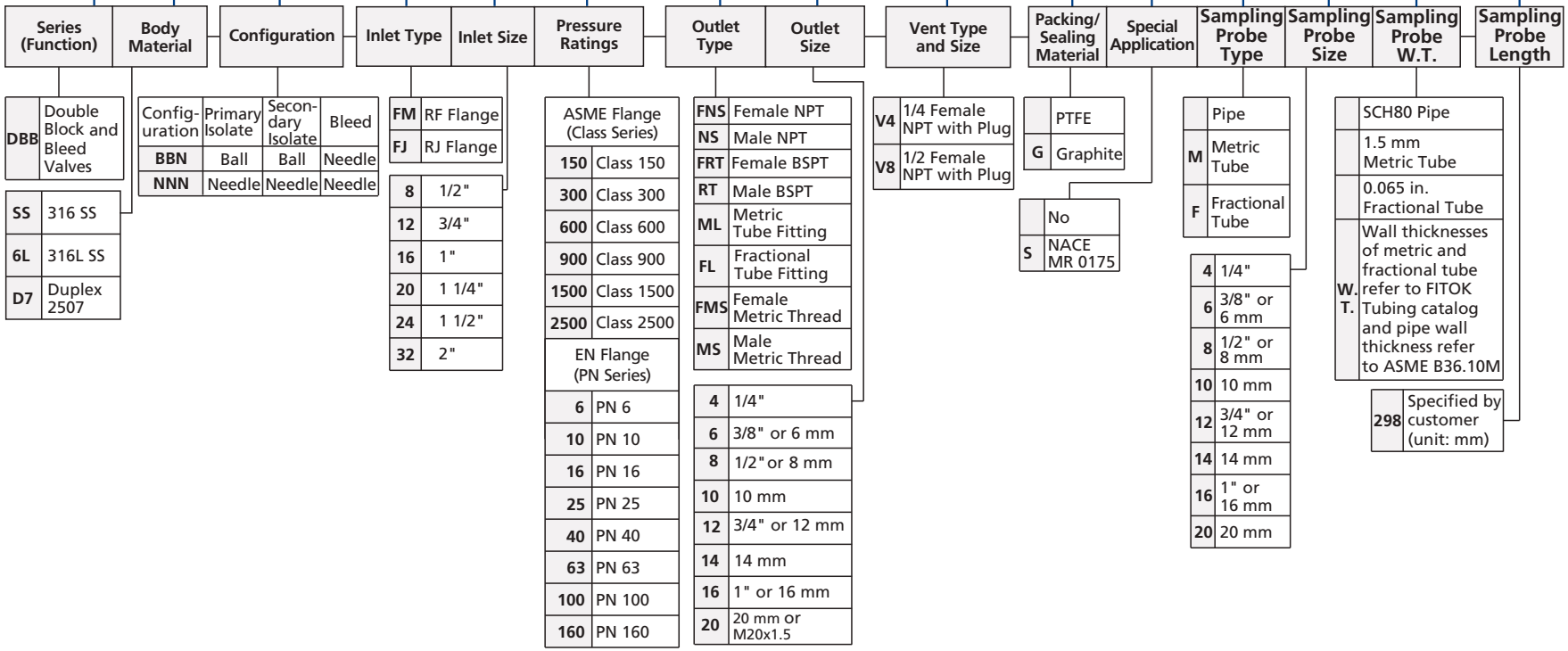

Note: For more information about hazards and risks of oxygen-enriched system, please contact FITOK Group or our authorized distributors.

Instrument Block and Bleed Valves

Features

◎ Integrally forged body
◎ A variety of instrument connections available
◎ 1/4 female NPT standard vent with plug

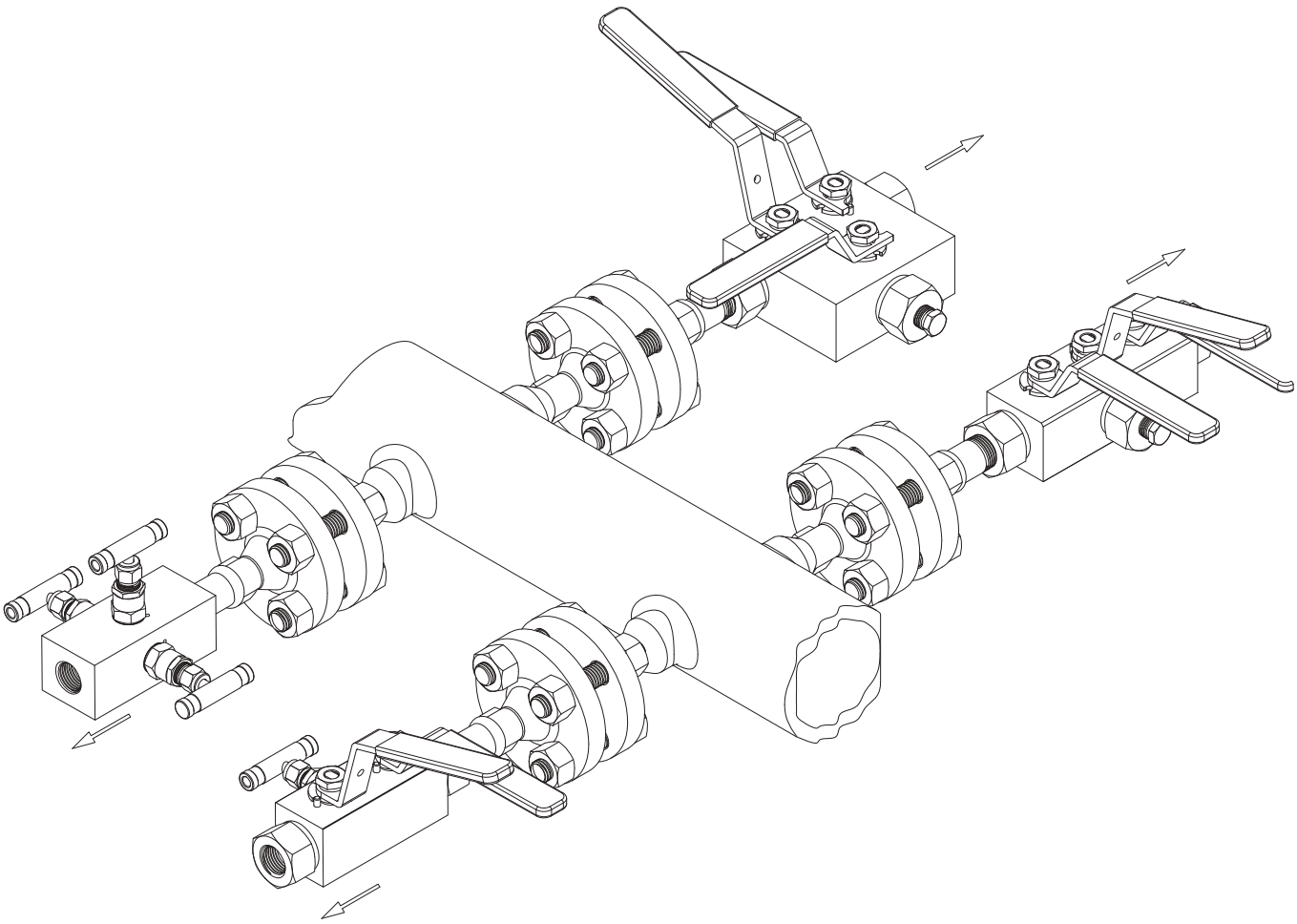

Valve Types and Dimensions

Double Block and Bleed Valves (BBN)

◎ Configuration (BBN): ball isolate, ball isolate, needle vent  Connection: Thread+Thread

Basic Ordering Information	Inlet/Process Connection	Outlet/Instrument Connection	Bleed/Vent
DBB□□-□BBN□-FNS□-V4-V	Female NPT	Female NPT	1/4 Female NPT

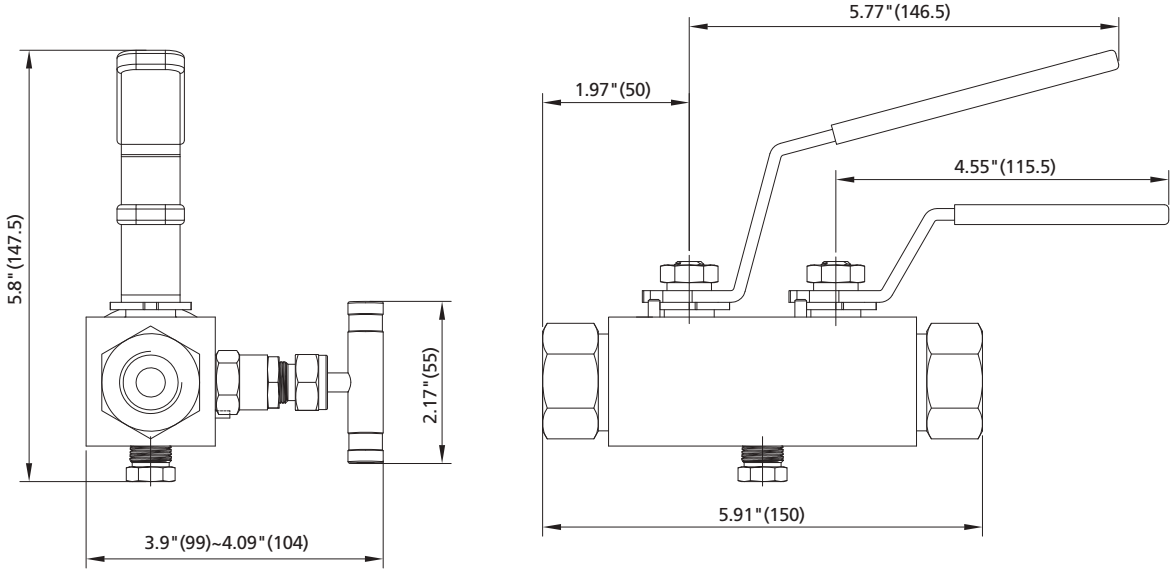

◎ Configuration (BBB): ball isolate, ball isolate, ball vent 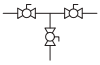 Connection: Thread+Thread

Basic Ordering Information	Inlet/Process Connection	Outlet/Instrument Connection	Bleed/Vent
DBB□□-BBB□-FNS□-V4-C	Female NPT	Female NPT	1/4 Female NPT

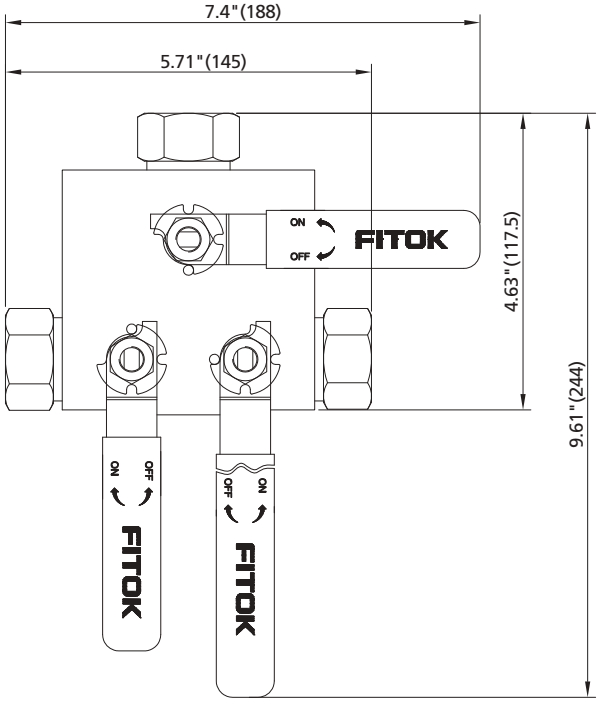

◎ Configuration (BBB): ball isolate, ball isolate, ball vent 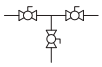 Connection: Thread+Thread

Basic Ordering Information	Inlet/Process Connection	Outlet/Instrument Connection	Bleed/Vent
DBB□□-BBB□-FNS□-V4-L	Female NPT	Female NPT	1/4 Female NPT

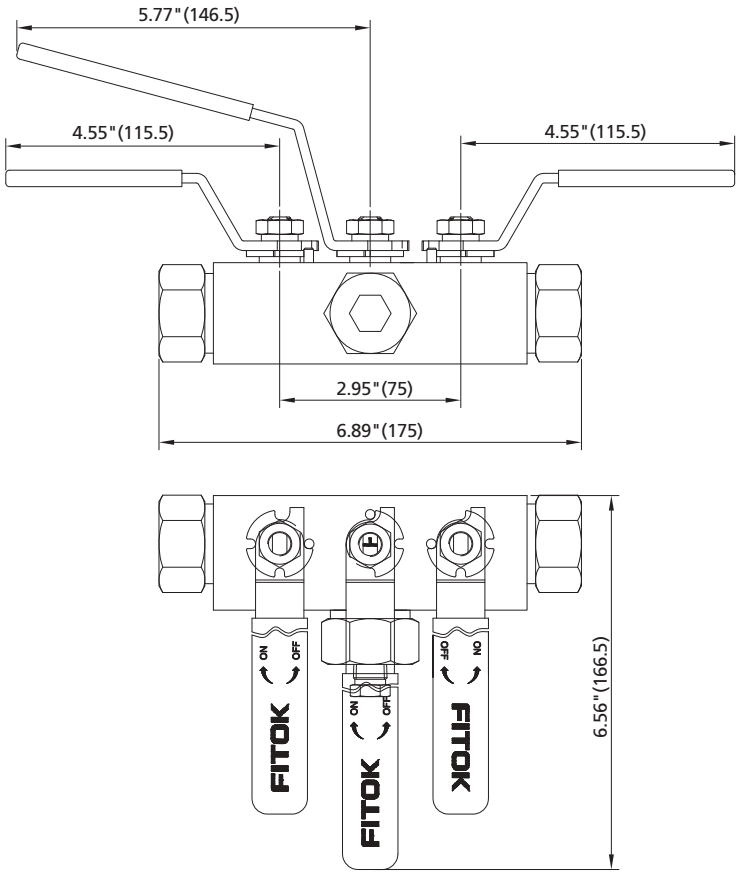

◎ Configuration (NNN): needle isolate, needle isolate, needle vent 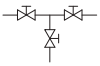 Connection: Thread+Thread

Basic Ordering Information	Inlet/Process Connection	Outlet/Instrument Connection	Bleed/Vent
DBB□□-□NNN-FNS□-V4-V	Female NPT	Female NPT	1/4 Female NPT

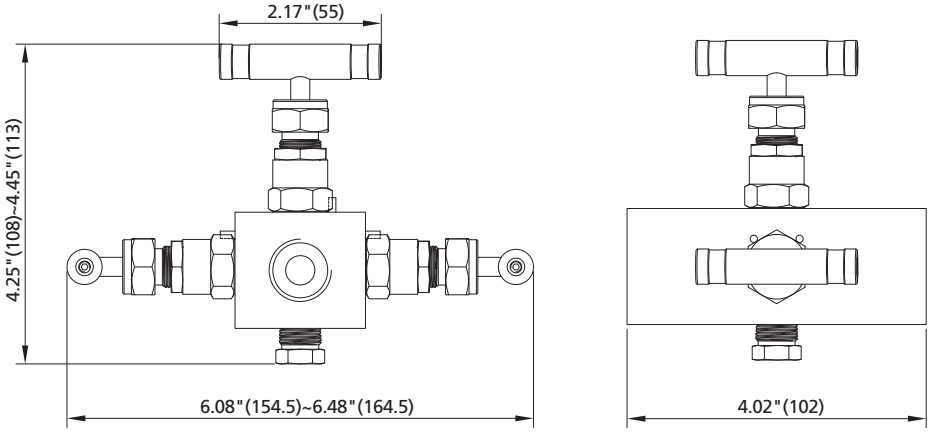

Single Block and Bleed Valves (BB)

◎ Configuration (BN): ball isolate, needle vent  Connection: Thread+Thread

Basic Ordering Information	Inlet/Process Connection	Outlet/Instrument Connection	Bleed/Vent
BB□□-□BN□-FNS□-V4-V	Female NPT	Female NPT	1/4 Female NPT

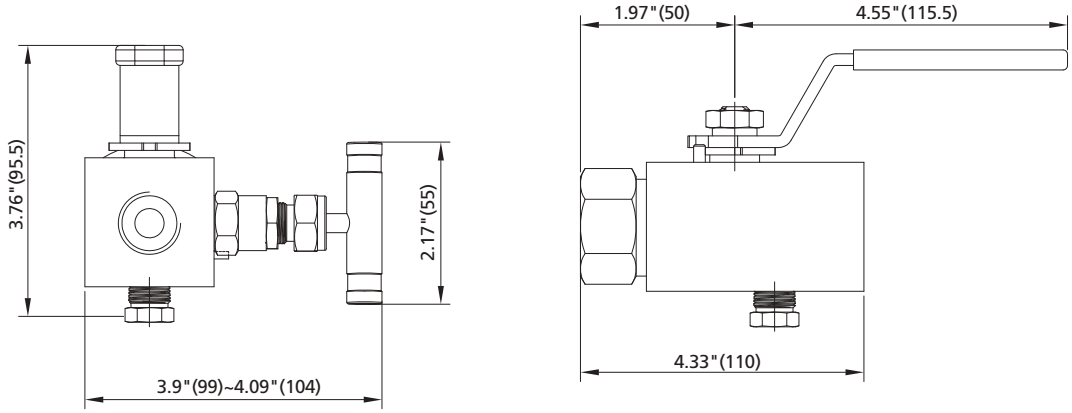

◎ Configuration (BB): ball isolate, ball vent  Connection: Thread+Thread

Basic Ordering Information	Inlet/Process Connection	Outlet/Instrument Connection	Bleed/Vent
BB□□-BB□-FNS□-V4-C	Female NPT	Female NPT	1/4 Female NPT

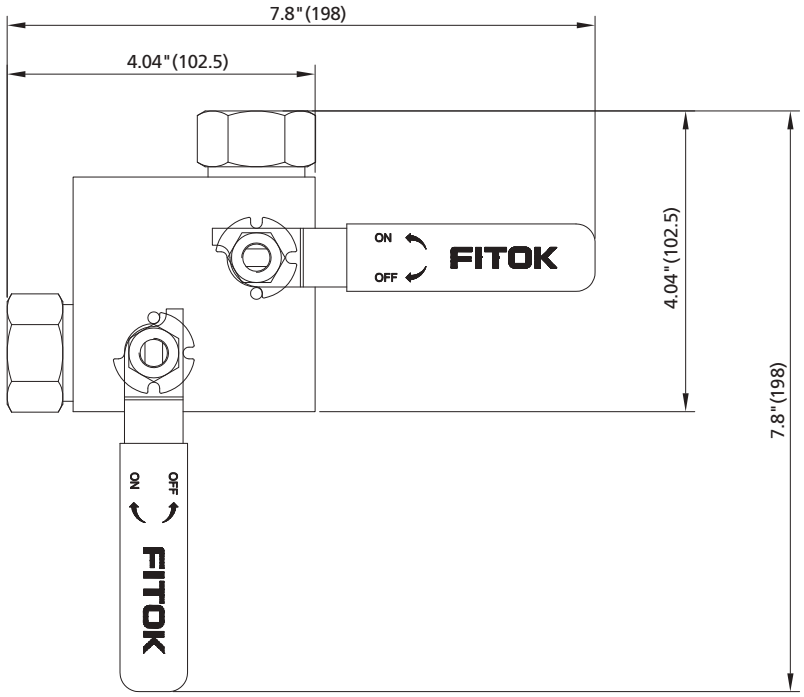

Ordering Number Description

DBBSS - 1BBN1 - NS810K - FNS810K - V4 - CGSF2

Series (Function)	Body Material	Needle Valve Bore Size	Configuration	Ball Valve Bore Size	Inlet Type	Inlet Size	Pressure Ratings	Outlet Type	Outlet Size	Pressure Ratings	Vent Type and Size	Body Style	Packing/ Sealing Material	Special Application	Cleaning and Packaging
DBB Double Block and Bleed Valves	SS 316 SS	No Needle Valves	Configuration: NNN, BBB, BBN, OON, BBO, ONN, BB, BN, BO	No Ball Valves	FNS Female NPT	4 1/4"	Class 2500	Same as inlet	Same as inlet	Same as inlet	V4 1/4 Female NPT with Plug	C Compact pattern	PTFE	No	FC-01
BB Single Block and Bleed Valves	6L 316L SS	4 mm	Primary Isolate: Needle, Ball, —	9.5 mm	NS Male NPT	6 3/8" or 6 mm	10 K 10000 psig (9000 psig for 316L), only applicable to 4 mm bore all-needle-valve configuration				V8 1/2 Female NPT with Plug	L Valves in-line mounted	G Graphite	S NACE MR 0175	F2 FC-02
	CS Carbon Steel	1 6.4 mm	Primary Isolate: Needle, Ball, —	1 14 mm	FRT Female BSPT	8 1/2" or 8 mm						V Valves Vertically mounted			
	D7 Duplex 2507	2 9.5 mm	Bleed: Needle, Ball, OS&Y	2 20 mm	RT Male BSPT	10 10 mm									
					ML Metric Tube Fitting	12 3/4" or 12 mm									
					FL Fractional Tube Fitting	14 14 mm									
					FMS Female Metric Thread	16 1" or 16 mm									
					MS Male Metric Thread										

1. For more information about hazards and risks of oxygen-enriched system, please contact FITOK Group or our authorized distributors.
2. Cleaning and Packaging:
2.2 FC-01: Standard cleaning and packaging for general industrial procedures.
2.2 FC-02: Special cleaning and packaging for wetted system components to ensure compliance with product cleanliness requirement as stated in ASTM G93 Level C.

Air Headers and Distribution Manifolds

Air Headers and Distribution Manifolds  C-72

Air Headers and Distribution Manifolds

AH and CM Series



Contents

AH Series Air Headers C-74

CM Series Distribution Manifolds C-78

AH Series Air Headers

Features

◎ Working pressure up to 1000 psig
◎ Working temperature: 0 to 250°F (-18 to 121°C)
◎ Modular design for easy installation and maintenance
◎ Standard module with 4 or 6 outlets available separately
◎ Multiple choices of inlet and vent types, and in-line replacement available
◎ Every air header leak tested at factory with air or nitrogen at rated working pressure

Major Materials of Construction

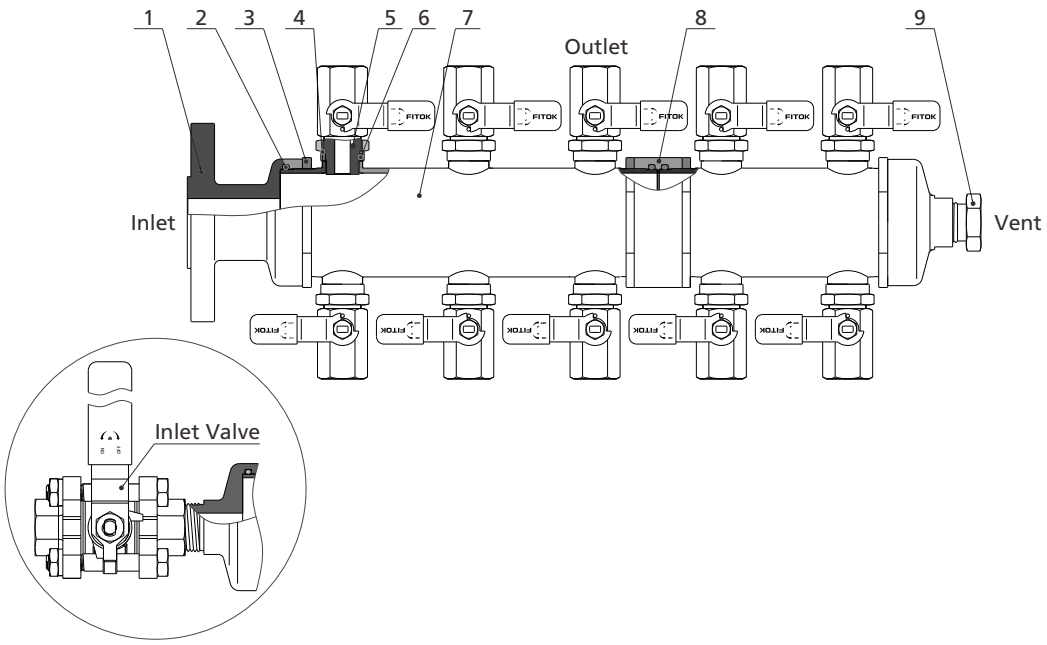

Item	Component	Material Designator		
		S4	SS	6L
1	Inlet Valve (BG Series)	CF8	CF8M	CF3M
	Flange/Fitting	304 SS	316 SS	316L SS
2	O-ring	NBR		
3	Lock Nut	304 SS		
4	Support Ring	304 SS	316 SS	316L SS
5	Outlet Valve (BR Series)	Main material 304 SS	316 SS or CF8M	Main material 316L SS
6	Seal Ring	PTFE		
7	Main Line	304 SS	316L SS	
8	Connection Nut	304 SS	316L SS	
9	Plug	304 SS	316 SS	316L SS

Standard Connection Types

Port	Connection Type	Specification	Standard
Inlet	Female NPT	1"	ASME B1.20.1
	Flange	Class 150, Class 300	ASME B16.5
		PN16, PN25, PN40	EN1092, GB/T9115
Outlet	Female NPT	1/2"	ASME B1.20.1
Vent	Female NPT	1/2"	ASME B1.20.1

Note: The connections listed above are standard. For other connection types, refer to "Ordering Number Description".

Ordering Information and Dimensions

Dimensions, in inches (millimeters), are for reference only and are subject to change.

Air Header

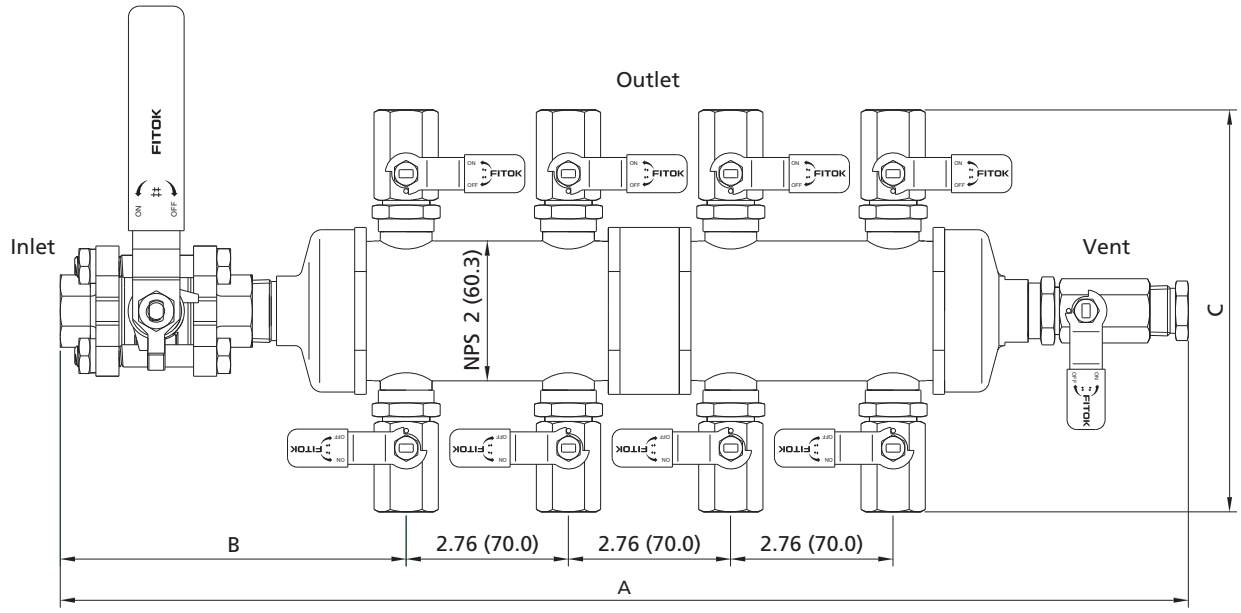

Basic Ordering Number	Connection Type and Size	Dimensions, in. (mm)		
		A	B	C
AH☐☐-AM16-8FNS8-FNS8	Inlet: 1" Class 150 RF flange; Outlet: 8 outlets, 1/2" Female NPT; Vent: 1/2" female NPT with plug	14.60 (370.8)	3.39 (86.0)	6.81 (173.0)
AH☐☐-FNS8-4FL4Y-FNS8	Inlet: 1/2" Female NPT; Outlet: 4 outlets, 1/4" FITOK tube fitting with plug; Vent: 1/2" female NPT with plug	8.00 (203.0)	2.29 (58.2)	9.71 (246.7)
AH☐☐-FNS12Y-8FNS8-VPFNS8	Inlet: 3/4" Female NPT with BG series ball valve; Outlet: 8 outlets, 1/2" Female NPT; Vent: 1/2" Female NPT with valve and plug	19.80 (503.0)	6.61 (168.0)	6.81 (173.0)

For a complete ordering number, add a material designator to the basic ordering numberFor other materials and connections, please contact the FITOK Group or our authorized distributors.

Accessory - Standard Module

Includes: main line, outlet valve, lock nut, support ring and seal ring.

Basic Ordering Number	Number of Outlet Valves	Dimensions, in. (mm)	
		D	E
☐☐AH-4FNS8	4	5.47 (139.0)	6.81 (173.0)
☐☐AH-6FNS8	6	8.23 (209.0)	

For a complete ordering number, add a material designator to the basic ordering number.

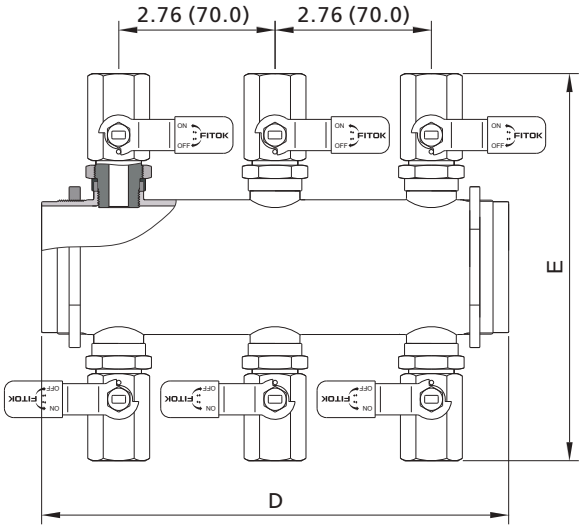

Other Accessories

Accessory	Basic Ordering Number	Description
Inlet Flange	☐☐AH-AM16	1" Class 150 RF flange
Inlet Thread	☐☐AH-FNS16	1" Female NPT
Connection Nut	☐☐AH-LM60	For connection of standard modules
O-ring	BN9-932	NBR O-ring

To order accessories except for O-ring, add a material designator (same with the main line) to the basic ordering number. For other inlet flange or thread types, please contact FITOK Group or our authorized distributors.

Ordering Number Description

AHS4 - FNS12Y - 4ML10Y - VFNS8 - U - F2

Series	Main Line Material	Inlet Type	Inlet Size	Inlet Valve	Number of Outlets	Outlet Type	Outlet Size	Outlet Plug	Vent Valve/Plug	Vent Type	Vent	Handle Type	Cleaning and Packaging
AH	S4 304 SS	FNS Female NPT	8 1/2"	(blank) No	4	FNS Female NPT	4 1/4"	(blank) No	(blank) Plug	FNS Female NPT	8 1/2" or 8 mm	(blank) Stainless steel bar handle with Yellow Vinyl Cover	(blank) FC-01
	SS 316 SS	FRT Female BSPT	12 3/4"	Y Yes	6	NS Male NPT	6 3/8" or 6 mm	Y Yes	V Valve	NS Male NPT	10 M10x1 or 10 mm	L Stainless Steel Bar Handle with Lock	F2 FC-02
	6L 316L SS	AM Class 150 RF Flange	16 1"		8	ML Metric Tube Fitting	8 1/2" or 8 mm		VP Valve with Plug	ML Metric Tube Fitting	12 3/4" or 12 mm	U Black Aluminum Lever Handle	
		AET Class 300 RF Flange	20 1 1/4"		10	FL Fractional Tube Fitting	10 M10 x 1 or 10 mm			FL Fractional Tube Fitting	14 M14x1.5 or 14 mm		
		DE PN 16 RF Flange	24 1 1/2"		12	MS Male Metric Thread (for RG)	12 3/4" or 12 mm			MS Male Metric Thread (for RG)			
		DM PN 25 RF Flange	32 2"		14	BP Male BSPP (for RG)	14 M14 x 1.5 or 14 mm			BP Male BSPP (for RG)			
		DMT PN 40 RF Flange											

Notes:

1. "Ordering Number Description" is an reference to understand the combination rules of FITOK part number.
Not all combinations are available.

2. Cleaning and Packaging:
FC-01: Standard cleaning and packaging for general industrial procedures.
FC-02: Special cleaning and packaging for wetted system components to ensure compliance with product cleaning requirement as stated in ASTM G93 Level C.

CM Series Distribution Manifolds

Features

◎ Working pressure up to 6000 pisg
◎ Working temperature:
PTFE packing: -15 to 450°F (-26 to 232°C)
Graphite packing: -15 to 1200°F (-26 to 649°C)
◎ One-piece, integral body,compact design
◎ Linear instead of rotary movement of the rising, non-rotating stem minimizes packing abrasion and reduces the friction between the seat and the tip
◎ Upper stem threads cold rolled and lower stem hardened for high strength and smooth operation
◎ Fully back seat sealing at fully open position
◎ Every distribution manifold leak tested at factory with air or Nitrogen at rated working pressure

Major Materials of Construction

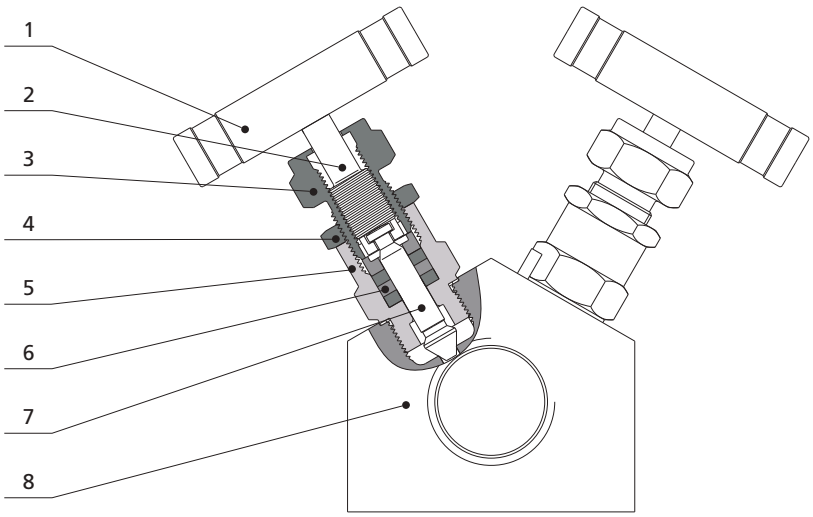

Item	Component	Material	
1	Handle	Anodized aluminum	
2	Upper Stem	316 SS	
3	Packing Gland	304 SS	
4	Lock Nut	Stainless Steel	
5	Bonnet	316 SS	
6	Packing	PTFE	Graphite
7	Lower Stem	316 SS	
8	Body	304 SS	316 SS

Standard Connection Types

Port	Connection Type	Specification	Standard
Inlet	Female NPT	1/4", 1/2", 3/4" or 1"	ASME B1.20.1
Outlet	Female NPT	1/4" or 1/2"	ASME B1.20.1
Vent	Female NPT	1/4", 1/2", 3/4" or 1"	ASME B1.20.1

Note: The connections listed above are standard, which are directly processed on the manifold body. For other connection types, which use adapter fittings, refer to "Ordering Number Description".

Dimensions

Dimensions, in inches (millimeters), are for reference only and are subject to change.
Changes in number of outlets only affect the overall length A, and other dimensions remain the same.

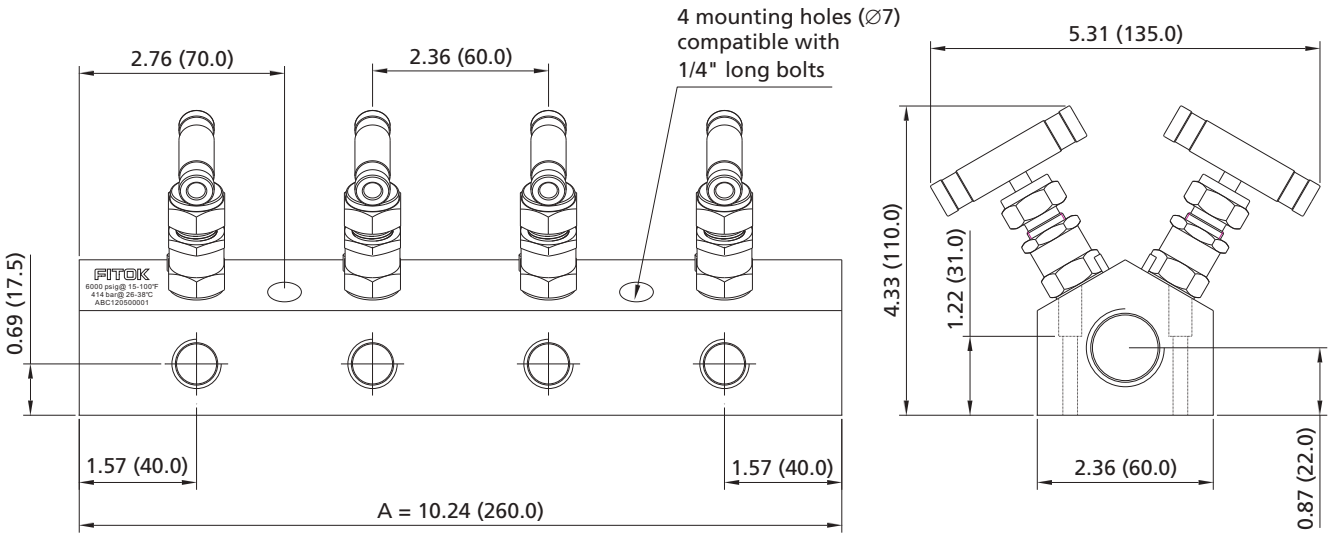

8-outlet manifold

Ordering Number Description

CMSS-FNS12-8FNS4Y-VFNS8-GC-SF2

Series	Body Material	Inlet Type	Inlet Size	Number of Outlets	Outlet Type	Outlet Size	Outlet Plug	Vent Valve/Plug	Vent Type	Vent Size	Needle Valve Packing	Handle	Special Application	Cleaning and Packaging
CM	SS 316 SS	FNS Female NPT	4 1/4"	4	FNS Female NPT	4 1/4"		Plug	FNS Female NPT	4 1/4"		Black Aluminum Bar	No	FC-01
	S4 304 SS	FRT Female BSPT	8 1/2"	6	NS Male NPT	6 3/8" or 6 mm	V Valve		NS Male NPT	8 1/2" or 8 mm		C Red Aluminum Bar	S NACE MR 0175	F2 FC-02
		FRP Female BSPP	12 3/4"	8	ML Metric Tube Fitting	8 1/2" or 8 mm	VP Valve with plug		ML Metric Tube Fitting	10 M10 x 1 or 10 mm		F Green Aluminum Bar		
		PS Pipe Socket Weld	*16 1"	10	FL Fractional Tube Fitting	10 M10×1 or 10 mm			FL Fractional Tube Fitting	12 3/4" or 12 mm		J Blue Aluminum Bar		
		PB Pipe Butt Weld		12	MS Male Metric Thread (for RG)	12 3/4" or 12 mm			MS Male Metric Thread (for RG)	14 M14 x 1.5 or 14 mm		M Stainless Ateel Bar		
					BP Male BSPP (for RG)	14 M14×1.5 or 14 mm			BP Male BSPP (for RG)	16 1"				

Vent Valve/Plug	Needle Valve Packing
No	PTFE
Y Yes	G Graphite

Notes:

1. *"Ordering Number Description" is an reference to understand the combination rules of FITOK part number. Not all combinations are available.*
2. *Cleaning and Packaging:*
   FC-01: Standard cleaning and packaging for general industrial procedures.
   FC-02: Special cleaning and packaging for wetted system components to ensure compliance with product cleaning requirement as stated in ASTM G93 Level C.
3. **Applies to maximum working pressure 3000 psig*

Hoses, Quick-Connects

Hoses and Connectors  D-02

Quick-Connects  D-29

Hoses and Connectors

MH, MM, MX, PS, MP, TH, HCH and HC Series

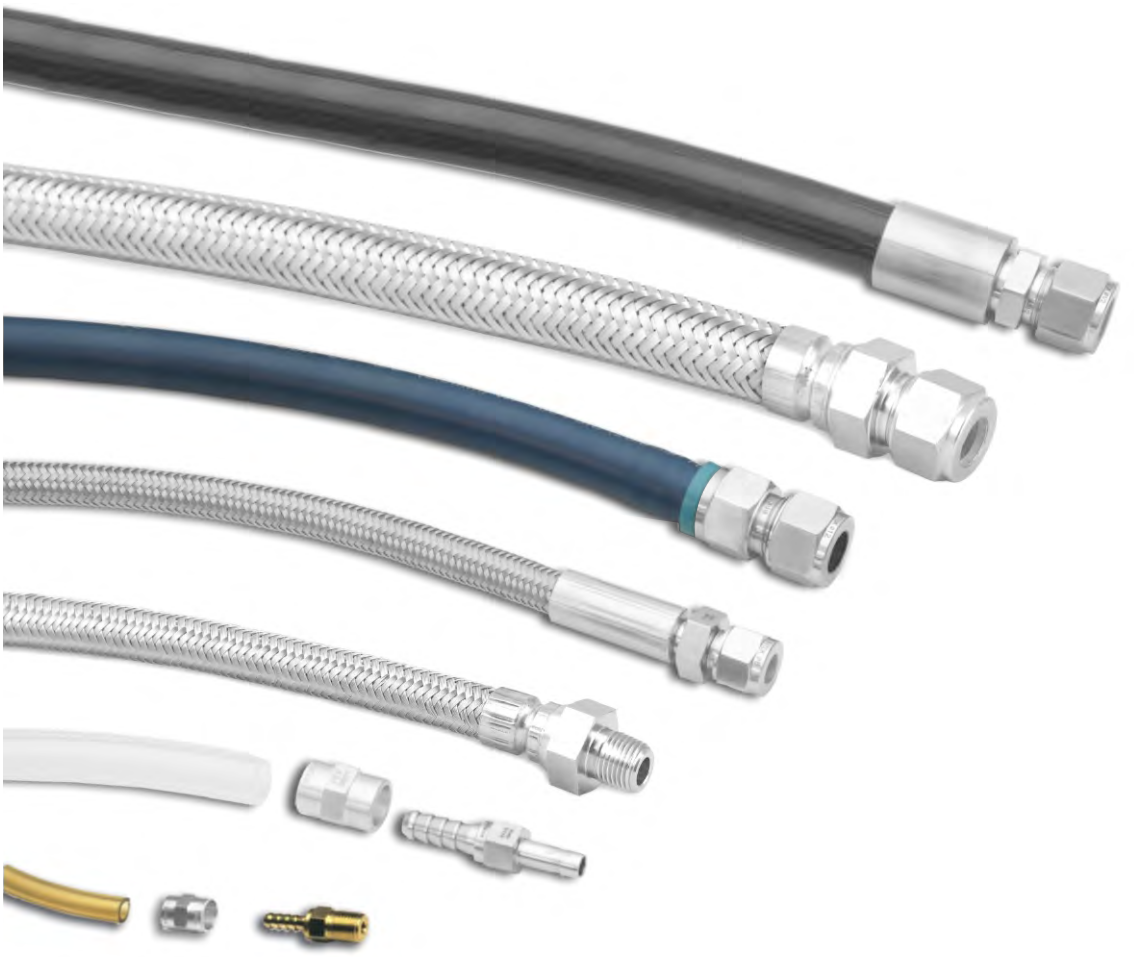

Contents

Terms and Definitions

D-04

Considerations for Selecting a Hose Assembly Solution

D-05

Installation and Use Guide

D-05

Metal Flexible Hoses

MH, MM, MX Series



D-07

PTFE-lined, Stainless Steel Braided Hoses

PS Series



D-15

Multipurpose Push-on Hoses

MP Series



D-18

Thermoplastic Hoses

TH Series



D-22

Compact Steel Wire Braided Hydraulic Hoses

HCH Series



D-24

Hose Connectors and Sleeves

HC Series



D-26

Terms and Definitions

Hose

A multiple-layered flexible conduit through which fluid is conveyed from one point to another.

Nominal Hose Size

An approximation of the hose inside diameter.

Bend Radius

The radius of the bent section of a hose, measured to the center line or inside of the curved section.

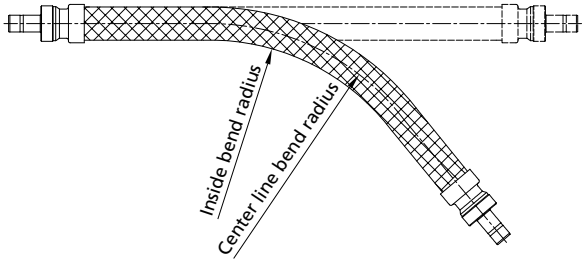

End Connection

The fitting that is assembled onto each end of the hose to provide a means of installation into a fluid system.

Overbraid

A flexible, woven reinforcement.

Maximum Outside Dimension

The largest nominal outside dimension of the hose assembly.

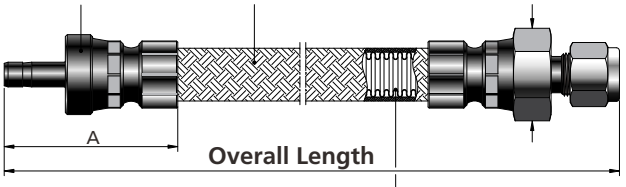

Spring Guard

A helical metal spring used to protect the hose from abrasion overbending, and kinking.

Reinforce-ment

Material used to reinforce the core and increase its pressure-containing capacity.

Core

The hose's innermost material that comes into contact with the system media, often referred to as the wetted surface.

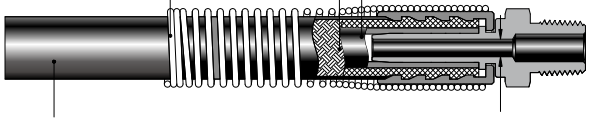

Cover

The hose's outermost material, used to protect the reinforcement and core from environmental conditions and wear.

Minimum Inside Diameter

The smallest inside diameter of inner flow path of the hose assembly.

Minimum Dynamic Bend Radius

The smallest bend radius that a hose is allowed to perform in applications where the hose undergoes dynamic bending and position changes.

Minimum Static Bend Radius

The smallest bend radius that a hose is allowed to perform in applications where the hose is stationary without any movement in any plane.

Flexibility

The relative ease or difficulty of bending a non-pressurized hose assembly.

Burst Pressure

The pressure at which leakage occurs in a laboratory burst test.

Permeation

The movement of a liquid, gas, or vapor through a solid. All materials are permeable to a certain degree and must be tested for application compatibility before installation.

Fire Jacket

Woven fiberglass coated with specially compounded silicone rubber to provide insulation from internal system fluid temperature extremes.

Minimum Inside Diameter

The smallest inside diameter of inner flow path of the hose assembly.

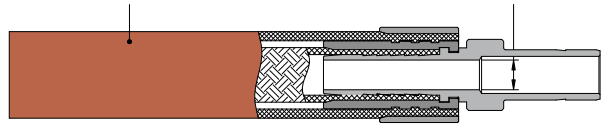

Safety Cable

Prevent hoses from whipping around and causing serious injuries in the event of fitting blow-off or hose burst. The knot at each end of cable can be adjusted before being secured to fixed point.

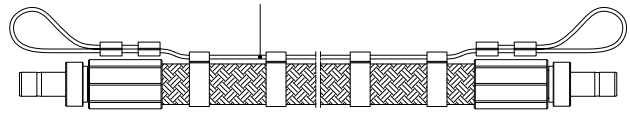

Considerations for Selecting a Hose Assembly Solution

Temperature

Identify the minimum and maximum temperatures the hose assembly will be exposed to in the system media and environment.

Pressure

Identify the minimum and maximum pressures (or vacuum) within and outside the hose assembly.

Material

Identify the system media and the environment that the hose assembly will be exposed to. This will help determine the materials best suited to the application demands.

Movement

Confirm whether the hose assembly will be installed in dynamic applications as this will require differentconsiderations than a static application.

Length

Determine the most likely route for installation of the hose, use this to identify required length.
Note: Different types of hoses vary in measuring position. For hoses with pipe fittings, length loss due to threading into the mating fitting should be taken into account.

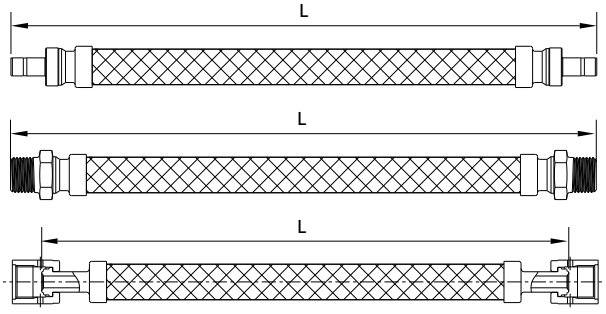

Cleanliness

Identify the cleanliness need.

End Connection

Identify the type of end connections that are most compatible with the system requirements. End connections differ in materials of construction and pressure ratings.

Orientation

Address space constraint concerns. Hose assemblies with elbows and union ball joints may help resolve space constraint issues.

Desired Flow

Consider desired flow. Hose connection size, core tube construction, and installation route may impact flow.

Additional Protection

Identify whether additional protection is necessary for the hose assemblies or surrounding systems.

Permeability

Nylon, PFA, polyethylene, PTFE, and rubber are permeable materials. Gases and vapors may migrate through cores of these materials. The permeation rate is affected by many factor variables.

Installation and Use Guide

⚠ Warning

Product failure or improper use may pose a threat to your personal safety and property.

Inspection

Inspect whether the hose length and layout are reasonable, and whether hose surface is free of defects and damage prior to installation. Establish an inspection schedule based on system application and replacement history.

Vibration

Evaluate the amount of system vibration when selecting a hose. Metal hose may not be appropriate for systems with constant or severe vibration.

Length

Consider hose movement, system pressurization, and thermal expansion when identifying hose length. Installing hose that is not long enough to accommodate these factors may shorten hose life.

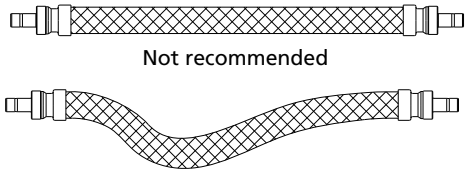

System Pressure Changes

Use sufficient hose length to accommodate system pressure changes. Do not connect high pressure hoses and low pressure hoses together.

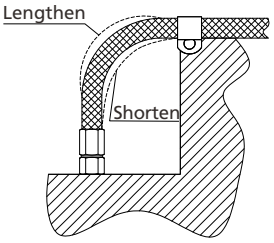

Hose Strain

Elbows and adapters can be used to relieve hose strain.

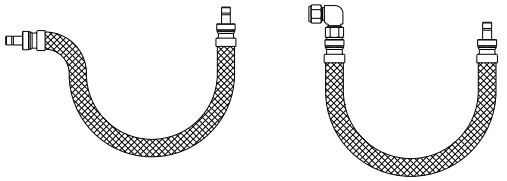

Not recommended Recommended

Minimum Bend Radius & Minimum Straight Length

Follow minimum bend radius requirements for your hose. Installing hose with smaller bends may kink hose and shorten hose life.

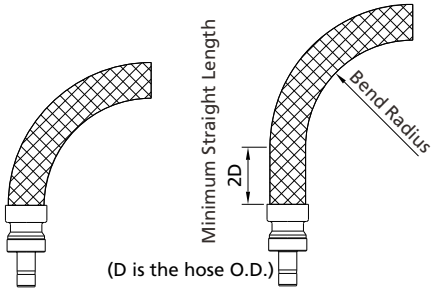

Not recommended Recommended

Maintain the minimum straight length for bent section, otherwise, hose rupture or leakage may result from bending too close to the hose/fitting connection.

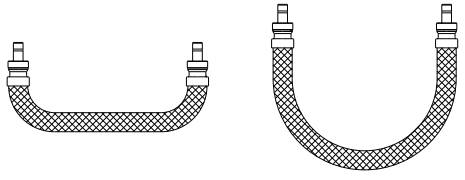

Not recommended Recommended

Twist Avoidance

Avoid twisting the hose assembly and causing stress that may affect its use.

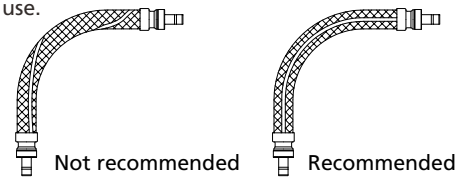

Not recommended Recommended

Bending in One Plane

Bend the hose in one plane only so as to avoid twisting. For a compound bend, use multiple hose pieces or other isolation methods.

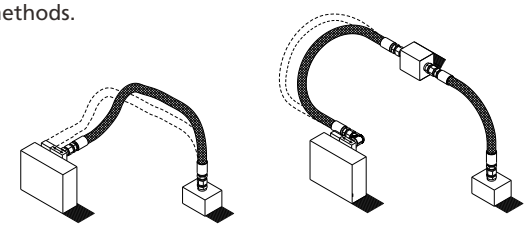

Not recommended Recommended

Motion Absorption

Distribute movement and prevent bends smaller than the hose's minimum bend radius by ensuring sufficient hose length.

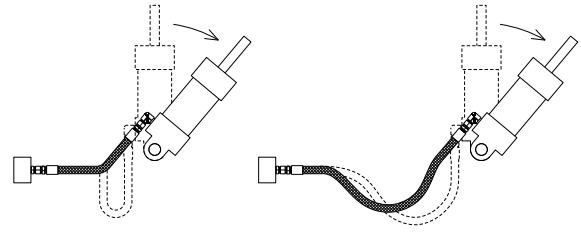

Not recommended Recommended

Elbow-connected hoses are better suited for vertical movement than hoses connected with straight fittings.

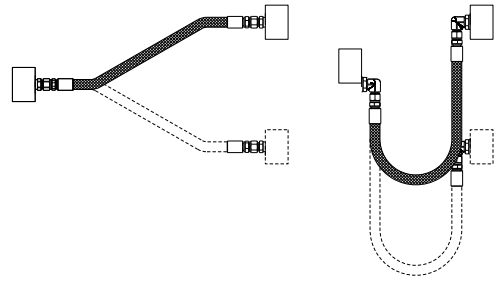

Not recommended Recommended

Necessary Limits and Protection Devices

Install necessary limits and protection devices to facilitate hose movement and avoid twisting.

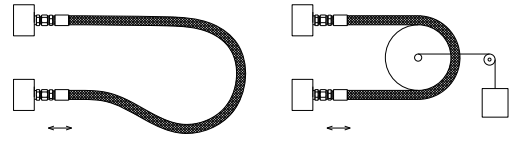

Not recommended Recommended

Metal Flexible Hoses

MH, MM, MX Series

Features



- Core tube material: 316L stainless steel
  Fitting material: 316 stainless steel
- Overbraid material: 304, 316 stainless steel available (316 SS not applicable to MM series annular hoses)
- Nominal hose size: 1/4" to 2"
- End connection sizes: 1/4" to 2" and 6 mm to 50 mm
- Working pressure up to: 6000 psig (414 bar)
- Working temperature: -325°F to 800°F (-200°C to 426°C)
- Vacuum and positive pressure applications
- Welded fitting-to-hose construction to ensure reliable seal
- Standard and custom length available

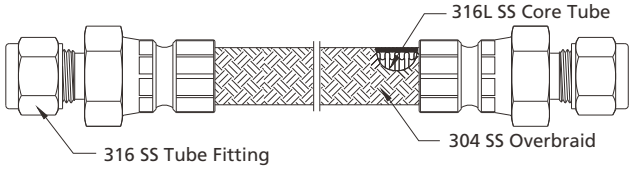

Hose Technical Parameters (MH Series)

Nominal Hose Size	Inside Diameter	Min. Bend Radius Helical Convoluted Core		Temperature Range	Working Pressure at 70°F (20°C)	Min. Burst Pressure at 70°F (20°C)
		Static	Dynamic			
in. (mm)	in. (mm)	in. (mm)	in. (mm)	°F (°C)	psig (bar)	psig (bar)
1/4 (6.4)	0.28 (7.1)	2.25 (57.2)	10.0 (254)	-325 to 800 (-200 to 426)	3100 (213)	12400 (854)
3/8 (9.7)	0.42 (10.6)	3.00 (76.2)	12.0 (305)		2000 (137)	8000 (551)
1/2 (12.7)	0.53 (13.5)	4.50 (114)	16.0 (406)		1800 (124)	7200 (496)
3/4 (19.0)	0.80 (20.3)	6.00 (152)	17.0 (432)		1500 (103)	6000 (413)
1 (25.4)	1.03 (26.0)	6.75 (171)	20.0 (508)		1200 (82.6)	4800 (330)
1 1/4 (31.8)	1.30 (33.0)	8.86 (225)	23.0 (584)		950 (65.4)	3800 (261)
1 1/2 (38.1)	1.53 (38.9)	11.0 (280)	26.0 (660)		900 (62.0)	3600 (248)
2 (50.8)	2.05 (52.1)	13.8 (350)	32.0 (813)		500 (34.4)	2000 (137)

Hose Technical Parameters (MM Series)

Nominal Hose Size	Inside Diameter	Min. Bend Radius Helical Convoluted Core		Min. Bend Radius Annular Convoluted Core		Temperature Range	Working Pressure at 70°F (20°C)	Min. Burst Pressure at 70°F (20°C)
		Static	Dynamic	Static	Dynamic			
in. (mm)	in. (mm)	in. (mm)	in. (mm)	in. (mm)	in. (mm)	°F (°C)	psig (bar)	psig (bar)
1/4 (6.4)	0.25 (6.4)	1.38 (35)	8.66 (220)	0.79 (20)	4.33 (110)	-325 to 800 (-200 to 426)	1600 (110)	6400 (440)
3/8 (9.7)	0.38 (9.5)	2.36 (60)	10.40 (264)	0.98 (25)	5.91 (150)		1470 (101)	6000 (413)
1/2 (12.7)	0.50 (12.7)	2.95 (75)	11.89 (302)	1.18 (30)	4.88 (124)		1110 (76.4)	4500 (310)
3/4 (19.0)	0.75 (19.0)	3.54 (90)	13.58 (345)	1.50 (38)	6.65 (169)		860 (59.2)	3500 (241)
1 (25.4)	1.00 (25.4)	4.13 (105)	15.00 (381)	1.77 (45)	7.68 (195)		680 (46.8)	2680 (184)
1 1/4 (31.8)	1.25 (31.8)	4.72 (120)	16.22 (412)				680 (46.8)	2600 (179)
1 1/2 (38.1)	1.50 (38.1)	5.51 (140)	16.89 (429)				520 (35.8)	2200 (151)
2 (50.8)	2.00 (50.8)	6.30 (160)	18.43 (468)				450 (31.0)	1800 (124)

Hose Technical Parameters (MX Series)

Nominal Hose Size	Inside Diameter	Min. Bend Radius Annular Convoluted Core		Temperature Range	Working Pressure at 70°F (20°C)	Min. Burst Pressure at 70°F (20°C)
		Static	Dynamic			
in. (mm)	in. (mm)	in. (mm)	in. (mm)	°F (°C)	psig (bar)	psig (bar)
1/4 (6.4)	0.25 (6.4)	1.50 (38.1)	5.50 (140.0)	-325 to 800 (-200 to 426)	6000 (414)	24000 (1655)
3/8 (9.7)	0.38 (9.5)	2.50 (64.0)	7.00 (178.0)		5000 (345)	20000 (1378)
1/2 (12.7)	0.51 (13.0)	3.00 (76.2)	8.00 (203.0)		4500 (310)	18000 (1240)

Testing

Every FITOK metal flexible hose is factory-tested with nitrogen or air at maximum working pressure and is subject to sampling test with helium to a maximum leak rate of 1×10^{-5} std cm^3/s before shipment . For other requirements, please contact FITOK Group or our authorized distributors.

Cleaning and Packaging

FITOK metal flexible hose components are cleaned in accordance with FITOK *Standard Cleaning and Packaging Process (FC-01)* for general industrial procedures.
Shorter hoses are packed in cartons with suitable protective material, longer hoses are coiled, bagged and boxed or crated.

Pressure vs. Temperature

MH series

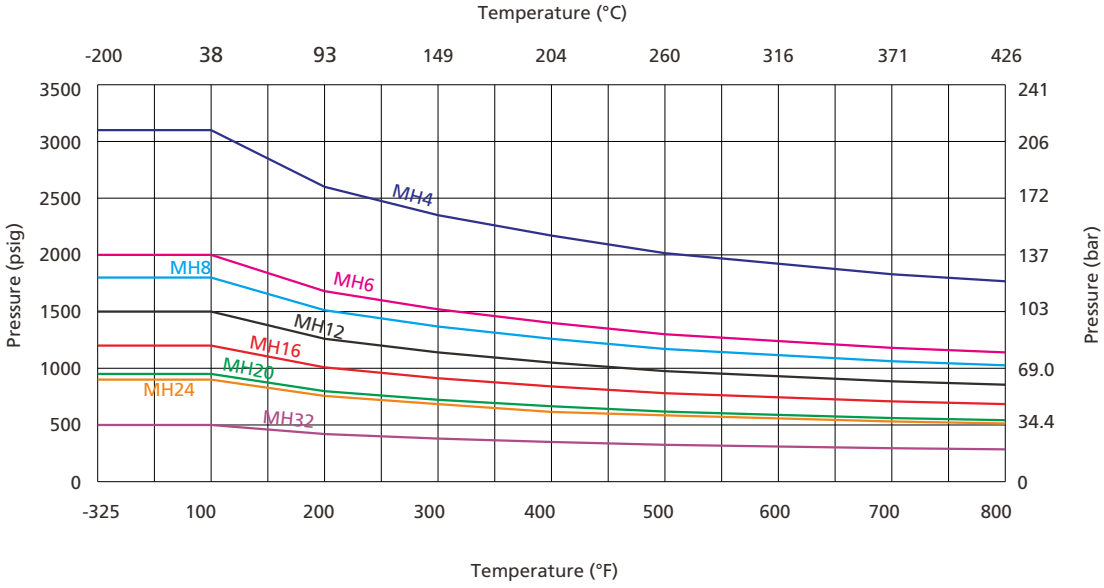

MM series

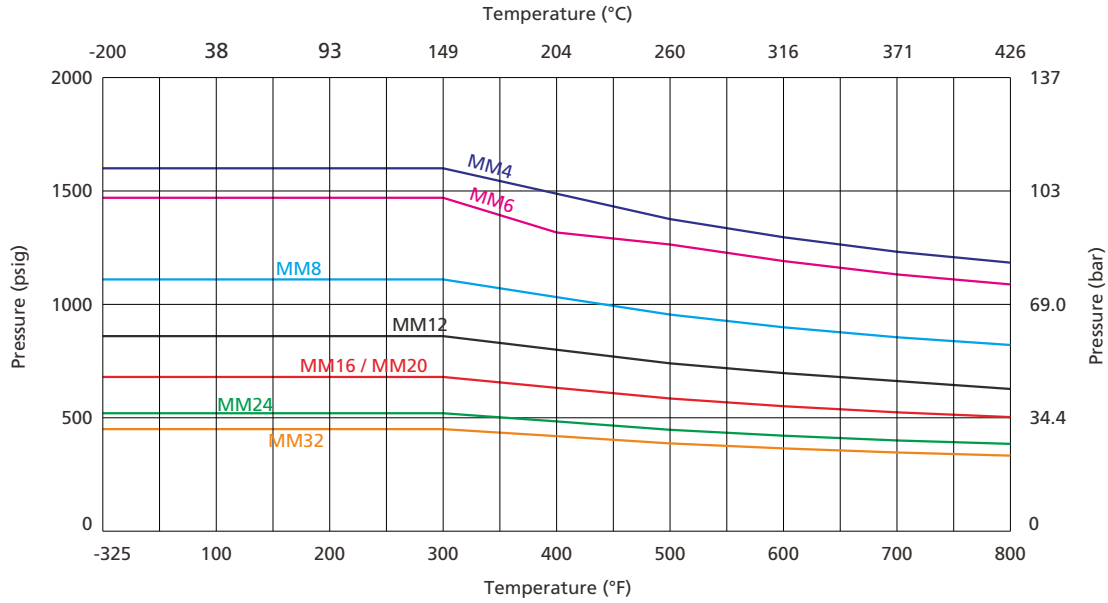

The peak value of pressure surge, shock or pulsations in the system should not exceed 50% of the rated working pressure of the hose.

MX series

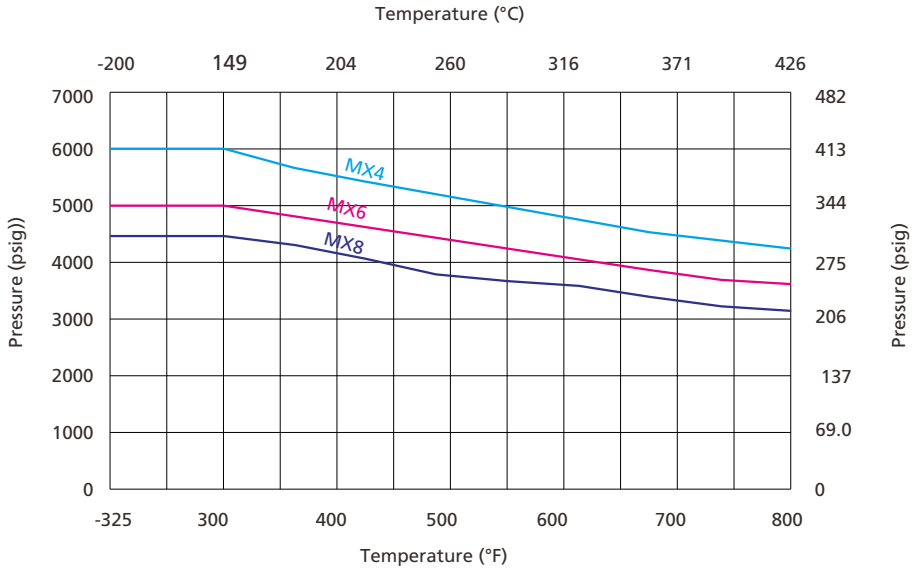

Standard Assemblies

Tube Fitting to Male NPT End

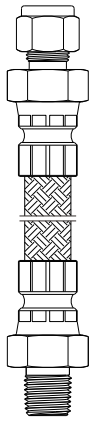

Nominal Hose Size	Tube Fitting Size	NPT Size	Hose Series	Overall Length	Ordering Number	Minimum Inside Diameter	Maximum Outside Dimension
in.	in.	in.		in. (mm)		in. (mm)	in. (mm)
1/4	1/4	1/4	MX4	12 (305)	SS-MX4-FL4-NS4-F12	0.19 (4.8)	0.94 (23.8)
			MH4	12 (305)	SS-MH4-FL4-NS4-F12	0.19 (4.8)	0.94 (23.8)
			MM4	36 (914)	SS-MM4-FL4-NS4-F36	0.19 (4.8)	0.87 (22.0)
3/8	3/8	3/8	MX6	18 (457)	SS-MX6-FL6-NS6-F18	0.28 (7.1)	1.15 (29.3)
			MH6	18 (457)	SS-MH6-FL6-NS6-F18	0.28 (7.1)	1.15 (29.3)
			MM6	36 (914)	SS-MM6-FL6-NS6-F36	0.28 (7.1)	1.01 (25.7)
1/2	1/2	1/2	MX8	18 (457)	SS-MX8-FL8-NS8-F18	0.41 (10.4)	1.30 (33.0)
			MH8	18 (457)	SS-MH8-FL8-NS8-F18	0.41 (10.4)	1.30 (33.0)
			MM8	48 (1220)	SS-MM8-FL8-NS8-F48	0.41 (10.4)	1.15 (29.3)
3/4	3/4	3/4	MH12	18 (457)	SS-MH12-FL12-NS12-F18	0.66 (16.0)	1.74 (44.2)
			MM12	48 (1220)	SS-MM12-FL12-NS12-F48	0.66 (16.0)	1.59 (40.5)
1	1	1	MH16	24 (610)	SS-MH16-FL16-NS16-F24	0.88 (22.4)	2.02 (51.3)

Tube Fitting End

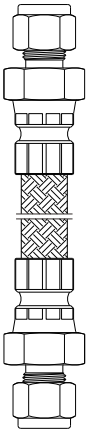

Nominal Hose Size	Tube Fitting Size	Hose Series	Overall Length	Ordering Number	Minimum Inside Diameter	Maximum Outside Dimension
in.	in.		in. (mm)		in. (mm)	in. (mm)
1/4	1/4	MX4	12 (305)	SS-MX4-FL4-F12	0.19 (4.8)	0.94 (23.8)
		MH4	12 (305)	SS-MH4-FL4-F12	0.19 (4.8)	0.94 (23.8)
		MM4	36 (914)	SS-MM4-FL4-F36	0.19 (4.8)	0.87 (22.0)
3/8	3/8	MX6	18 (457)	SS-MX6-FL6-F18	0.28 (7.1)	1.15 (29.3)
		MH6	18 (457)	SS-MH6-FL6-F18	0.28 (7.1)	1.15 (29.3)
		MM6	36 (914)	SS-MM6-FL6-F36	0.28 (7.1)	1.01 (25.7)
1/2	1/2	MX8	18 (457)	SS-MX8-FL8-F18	0.41 (10.4)	1.30 (33.0)
		MH8	18 (457)	SS-MH8-FL8-F18	0.41 (10.4)	1.30 (33.0)
		MM8	48 (1220)	SS-MM8-FL8-F48	0.41 (10.4)	1.15 (29.3)
3/4	3/4	MH12	18 (457)	SS-MH12-FL12-F18	0.66 (16.0)	1.74 (44.2)
		MM12	48 (1220)	SS-MM12-FL12-F48	0.66 (16.0)	1.59 (40.5)
1	1	MH16	24 (610)	SS-MH16-FL16-F24	0.88 (22.4)	2.02 (51.3)

Tube Adapter End

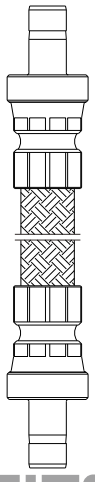

Nominal Hose Size	Tube Adapter Size	Hose Series	Overall Length	Ordering Number	Minimum Inside Diameter	Maximum Outside Dimension
in.	in.		in. (mm)		in. (mm)	in. (mm)
1/4	1/4	MX4	12 (305)	SS-MX4-FT4-F12	0.17 (4.3)	0.81 (20.6)
		MH4	12 (305)	SS-MH4-FT4-F12	0.16 (4.1)	0.81 (20.6)
		MM4	36 (914)	SS-MM4-FT4-F36	0.16 (4.1)	0.76 (19.2)
3/8	3/8	MX6	18 (457)	SS-MX6-FT6-F18	0.27 (6.9)	1.02 (26.0)
		MH6	12 (305)	SS-MH6-FT6-F12	0.27 (6.9)	1.01 (25.6)
		MM6	36 (914)	SS-MM6-FT6-F36	0.27 (6.9)	0.91 (23.1)
1/2	1/2	MX8	18 (457)	SS-MX8-FT8-F18	0.37 (9.4)	1.14 (29.0)

1. All dimensions are for reference only and are subject to change. For dimensions not shown above, please contact FITOK Group or our authorized distributors.
2. Types listed are standard. Other types are available upon request.

End Connections

Tube Adapters

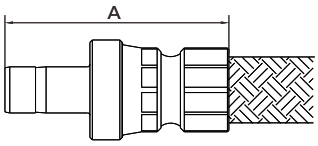

Tube Adapter Size	Nominal Hose Size	End Connection Designator	Dimensions		
			A	Maximum Outside Dimension	Minimum Inside Diameter
in.	in.		in. (mm)		
1/4	1/4	FT4	1.76 (44.7)	0.81 (20.6)	0.16 (4.1)
3/8	3/8	FT6	1.82 (46.2)	1.02 (26.0)	0.27 (6.9)
1/2	1/2	FT8	2.22 (56.4)	1.14 (29.0)	0.37 (9.4)
3/4	3/4	FT12	2.35 (59.7)	1.54 (39.1)	0.58 (14.7)
1	1	FT16	2.69 (68.3)	1.82 (46.3)	0.80 (20.3)
in.	mm	——	mm (in.)		
1/4	6	MT6	44.4 (1.75)	20.6 (0.81)	4.1 (0.16)
3/8	10	MT10	47.0 (1.85)	26.0 (1.02)	7.1 (0.28)
1/2	12	MT12	57.2 (2.25)	29.0 (1.14)	8.9 (0.35)

Tube Fittings

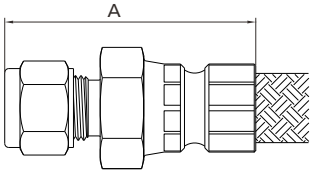

Automatic Weld Style-1 in. and Under

Tube Fitting Size	Nominal Hose Size	End Connection Designator	Dimensions		
			A	Maximum Outside Dimension	Minimum Inside Diameter
in.	in.		in. (mm)		
1/4	1/4	FL4	1.94 (49.3)	0.94 (23.8)	0.19 (4.8)
1/4	3/8	FL6	2.00 (50.8)	0.94 (23.8)	0.28 (7.1)
3/8	3/8	FL6	2.02 (51.3)	1.15 (29.3)	0.28 (7.1)
1/2	1/2	FL8	2.24 (56.9)	1.30 (33.0)	0.41 (10.4)
1/2	5/8	FL10	2.27 (57.7)	1.30 (33.0)	0.50 (12.7)
3/4	3/4	FL12	2.35 (59.7)	1.74 (44.2)	0.63 (16.0)
1	1	FL16	2.64 (67.1)	2.02 (51.3)	0.88 (22.4)
1 1/4	1 1/4	FL20	4.04 (103)	2.23 (58.9)	1.09 (27.7)
1 1/2	1 1/2	FL24	4.75 (121)	2.61 (66.3)	1.34 (34.0)
2	2	FL32	5.72 (145)	3.48 (88.4)	1.88 (47.8)
in.	mm	——	mm (in.)		
1/4	6	ML6	62.2 (2.45)	23.8 (0.94)	4.8 (0.19)
1/4	8	ML8	63.2 (2.49)	23.8 (0.94)	6.4 (0.25)
3/8	10	ML10	51.6 (2.03)	29.3 (1.15)	7.9 (0.31)
1/2	12	ML12	56.9 (2.24)	33.0 (1.30)	9.7 (0.38)

Male FR Metal Gasket Face Seal Fittings Swivel

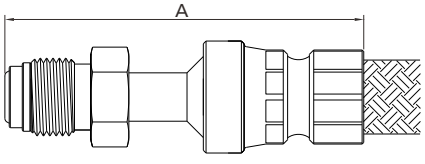

FR Size	Nominal Hose Size	End Connection Designator	Dimensions		
			A	Minimum Inside Diameter	Maximum Outside Dimension
in.	in.		in. (mm)		
1/4	1/4	SFR4	2.60 (66.0)	0.18 (4.6)	0.81 (20.6)
1/2	1/2	SFR8	2.83 (71.9)	0.40 (10.2)	1.14 (29.0)
3/4	3/4	SFR12	4.19 (106)	0.65 (16.5)	1.54 (39.1)
1	1	SFR16	4.80 (122)	0.87 (22.1)	1.88 (47.7)

End Connections

Female FR Metal Gasket Face Seal Fittings Swivel

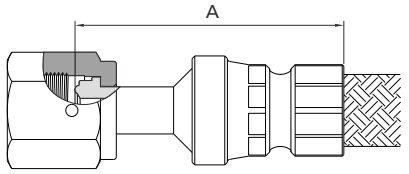

FR Size	Nominal Hose Size	End Connection Designator	Dimensions		
			A	Minimum Inside Diameter	Maximum Outside Dimension
in.	in.		in. (mm)		
1/4	1/4	SFFR4	2.00 (50.8)	0.18 (4.6)	0.87 (22.1)
1/2	1/2	SFFR8	2.16 (54.9)	0.40 (10.2)	1.23 (31.3)
3/4	3/4	SFFR12	4.19 (106)	0.65 (16.5)	1.74 (44.2)
1	1	SFFR16	4.80 (122)	0.87 (22.1)	2.03 (51.6)

Female FO O-Ring Face Seal Fittings Swivel

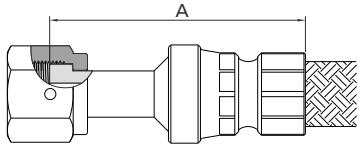

FO Size	Nominal Hose Size	End Connection Designator	Dimensions		
			A	Minimum Inside Diameter	Maximum Outside Dimension
in.	in.		in. (mm)		
1/4	1/4	SFFO4	2.11 (53.6)	0.18 (4.6)	0.81 (20.6)
1/2	1/2	SFFO8	2.14 (54.4)	0.40 (10.2)	1.23 (31.3)

SAE 37° (JIC) Female Swivel

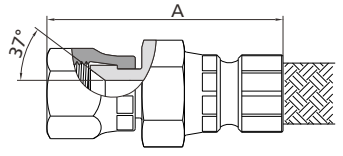

Swivel Size	Nominal Hose Size	End Connection Designator	Dimensions		
			A	Minimum Inside Diameter	Maximum Outside Dimension
in.	in.		in. (mm)		
1/4	1/4	SAN4	1.87 (47.5)	0.17 (4.3)	0.81 (20.6)
3/8	3/8	SAN6	1.98 (50.3)	0.28 (7.1)	1.05 (26.6)
1/2	1/2	SAN8	2.25 (57.2)	0.42 (10.7)	1.23 (31.3)

Female Pipe Threads, NPT

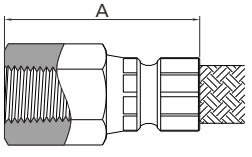

NPT Size	Nominal Hose Size	End Connection Designator	Dimensions		
			A	Minimum Inside Diameter	Maximum Outside Dimension
in.	in.		in. (mm)		
1/4	1/4	FNS4	1.81 (46.0)	0.28 (7.1)	0.94 (23.8)
3/8	3/8	FNS6	1.87 (47.5)	0.38 (9.7)	1.15 (29.3)
1/2	1/2	FNS8	2.18 (55.4)	0.47 (11.9)	1.30 (33.0)
3/4	3/4	FNS12	2.21 (56.1)	0.72 (18.3)	1.74 (44.2)

Male Pipe Threads, NPT

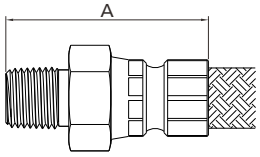

Automatic Weld Style-1 in. and Under

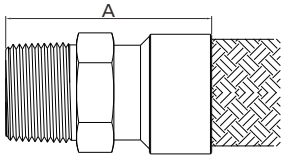

Manual Weld Style-Over 1 in.

NPT Size	Nominal Hose Size	End Connection Designator	Dimensions		
			A	Minimum Inside Diameter	Maximum Outside Dimension
in.	in.		in. (mm)		
1/4	1/4	NS4	1.80 (45.7)	0.28 (7.1)	0.94 (23.8)
1/4	3/8	NS4	1.81 (46.0)	0.28 (7.1)	1.15 (29.3)
3/8	3/8	NS6	1.81 (46.0)	0.38 (9.7)	1.15 (29.3)
1/2	1/4	NS8	1.99 (50.6)	0.47 (11.9)	1.02 (25.8)
1/2	1/2	NS8	2.15 (54.6)	0.47 (11.9)	1.30 (33.0)
3/4	3/4	NS12	2.22 (56.4)	0.63 (16.0)	1.74 (44.2)
1	1	NS16	2.54 (64.5)	0.88 (22.4)	2.02 (51.3)
1 1/4	1 1/4	NS20	3.06 (77.7)	1.09 (27.7)	2.31 (58.7)
1 1/2	1 1/2	NS24	3.72 (94.5)	1.34 (34.0)	2.31 (58.7)
2	2	NS32	4.19 (106)	1.81 (46.0)	3.19 (81.0)

Options

Anti-whip Cable

- 304 stainless steel cable
- Available on hoses without changing the technical parameters of hoses
- Prevent hoses from whipping around and causing serious injuries in the event of fitting blow-off or hose burst

Ordering Number Description

SS - MH4 - FL6 - NS6 - F36 - R - Z - SK

End Connection Material	
SS	316 SS
904L	904L SS

Hose	
MH	MH Metal Hose
MM	MM Metal Hose
MX	MX Metal Hose

Nominal Hose Size	
4	1/4"
6	3/8"
8	1/2"
12	3/4"
16	1"
20	1 1/4"
24	1 1/2"
32	2"

End Connection 1 Type	
ML	Metric Tube Fitting
FL	Fractional Tube Fitting
MT	Metric Tube Adapter
FT	Fractional Tube Adapter
FNS	Female NPT
NS	Male NPT
FRT	Female BSPT
RT	Male BSPT
FMS	Female Metric Thread (for RG-M)
MS	Male Metric Thread (for RG-M)
SAN	Female JIC 37° Flare Swivel
AN	Male JIC 37° Flare
SFFR	Female FR Fitting Swivel
SFR	Male FR Fitting Swivel
OTB	Tube Butt Weld Fitting

End Connection 1 Size	
3	3/16"
4	1/4"
6	3/8" or 6 mm
8	1/2" or 8 mm
10	5/8" or 10 mm
12	3/4" or 12 mm
14	M14 x 1.5
16	1" or 16 mm
18	M18 x 1.5
20	M20 x 1.5

End Connection 2 Type and Size	
	Same as End 1
	Specified in the same way as the end connection 1 type and size
FXX	XX in. (XX is a multiple of 0.1)
MXX	XX mm (XX is a multiple of 10)

Overall Length	

Convolution	
	MX Annular Convoluted
	MH, MM Helical Convoluted
R	Annular (for MM series only)

Overbraid	
	304
Z	316 (Not applicable to MM series annular hoses)

Option①	
	None
SK	Anti-whip Cable
AR2	Helium Leak Testing (1×10^{-9} std cm^3/s)

① To select multiple optional accessories, add their designators in top-to-bottom order, separated by hyphens.
Example: SS-MH4-FL6-NS6-F36-SK-AR2

Note: "Ordering Number Description" is a reference to understand the combination rules of FITOK product part number. Not all combinations are available.

Example: SS-MH4-FT6-M710

SS: End connection material is 316 stainless steel.
MH4: MH series, nominal hose size is 1/4".
FT6: End connection 1 is 3/8" tube adapter.
End connection 2 is 3/8" tube adapter.
M710: Overall length is 710 mm.

Connections are described based on the following rules:
1. Metric Tube Fitting - Fractional Tube Fitting - Metric Tube Adapters - Fractional Tube Adapters - NPT Threads - BSPT Threads - BSPP Threads - SAE/MS Parallel Threads - 37° Flare - FR Fitting - OTB Tube Butt Weld Fitting - Others
2. Put the sizes from the biggest down to the smallest if they are of the same type.
3. Put the female before male if they are of the same type and size.

PTFE-lined, Stainless Steel Braided Hoses

PS Series

Features

- Core tube material: PTFE
- Overbraid material: 304 stainless steel
- Nominal hose size: 1/8" to 1"
- Working pressure up to: 3000 psig (207 bar)
- Working temperature: -65°F to 400°F (-53°C to 204°C)
- Lightweight construction for easy handling and installation
- Standard and custom length available



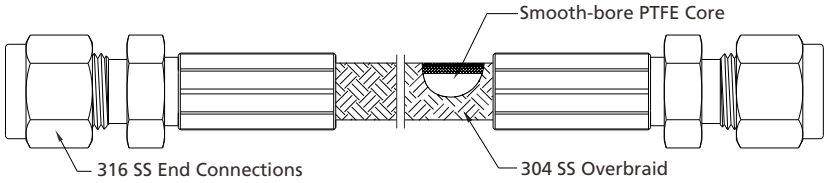

Hose Technical Parameters

Nominal Hose Size	Inside Diameter	Min. Inside Bend Radius		Temperature Range	Working Pressure at 70°F (20°C)	Min. Burst Pressure at 70°F (20°C)
		Static	Dynamic			
in. (mm)	in. (mm)	in. (mm)	in. (mm)	°F (°C)	psig (bar)	psig (bar)
1/8 (3.2)	0.13 (3.2)	1.5 (38.1)	3.75 (95.2)	-65 to 400 (-53 to 204)	3000 (206)	12000 (826)
1/4 (6.4)	0.19 (4.8)	1.5 (38.1)	2.0 (50.8)		3000 (206)	12000 (826)
3/8 (9.5)	0.31 (7.9)	3.5 (88.9)	5.0 (127)		2500 (172)	10000 (690)
1/2 (12.7)	0.41 (10.3)	4.5 (114)	6.0 (152)		2000 (137)	8000 (551)
3/4 (19.0)	0.63 (15.9)	6.0 (152)	7.5 (190)		1500 (103)	6000 (413)
1 (25.4)	0.88 (22.2)	9.0 (229)	11.3 (287)		1000 (68)	4000 (275)

Pressure vs. Temperature

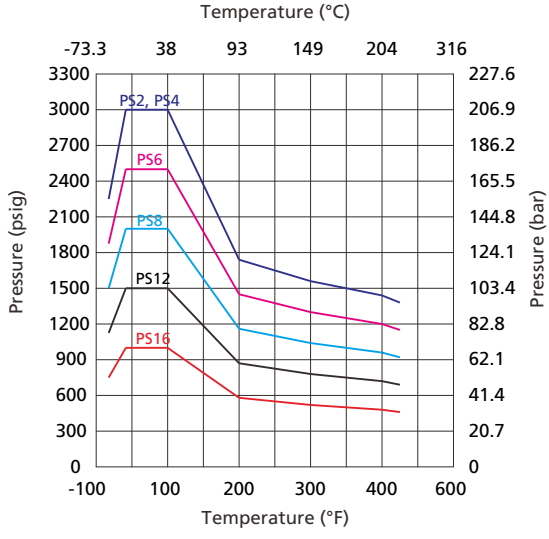

Testing

Every FITOK PTFE-lined hose assembly is factory tested with pure water at 1.5 times the maximum working pressure.

Cleaning and Packaging

FITOK PTFE-lined hose components are cleaned in accordance with FITOK *Standard Cleaning and Packaging Process (FC-01)* for general industrial procedures.
Shorter hoses are packed in cartons with suitable protective material, longer hoses are coiled, bagged and boxed or crated.

PTFE-lined Hose Standard Assemblies

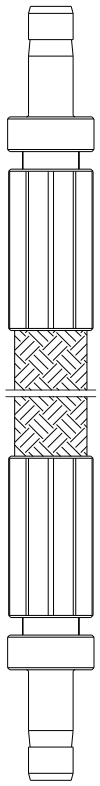

Nominal Hose Size	Tube Adapter Size	Overall Length	Ordering Number	Minimum Inside Diameter	Maximum Outside Dimension
in.	in.	in. (mm)		in. (mm)	in. (mm)
1/8	1/8	6.0 (153)	SS-PS2-FT2-F6	0.08 (2.0)	0.46 (11.6)
		12.0 (305)	SS-PS2-FT2-F12		
		18.0 (458)	SS-PS2-FT2-F18		
		24.0 (610)	SS-PS2-FT2-F24		
		36.0 (915)	SS-PS2-FT2-F36		
1/4	1/4	6.0 (153)	SS-PS4-FT4-F6	0.13 (3.3)	0.49 (12.4)
		12.0 (305)	SS-PS4-FT4-F12		
		18.0 (458)	SS-PS4-FT4-F18		
		24.0 (610)	SS-PS4-FT4-F24		
		36.0 (915)	SS-PS4-FT4-F36		
		48.0 (1220)	SS-PS4-FT4-F48		
		60.0 (1530)	SS-PS4-FT4-F60		
		72.0 (1829)	SS-PS4-FT4-F72		
		120.0 (3050)	SS-PS4-FT4-F120		
3/8	3/8	12.0 (305)	SS-PS6-FT6-F12	0.27 (6.9)	0.73 (18.5)
		18.0 (458)	SS-PS6-FT6-F18		
		24.0 (610)	SS-PS6-FT6-F24		
		36.0 (915)	SS-PS6-FT6-F36		
		48.0 (1220)	SS-PS6-FT6-F48		
		60.0 (1530)	SS-PS6-FT6-F60		
		72.0 (1829)	SS-PS6-FT6-F72		
		96.0 (2439)	SS-PS6-FT6-F96		
		120.0 (3050)	SS-PS6-FT6-F120		
1/2	1/2	12.0 (305)	SS-PS8-FT8-F12	0.36 (9.1)	0.86 (21.8)
		24.0 (610)	SS-PS8-FT8-F24		
		36.0 (915)	SS-PS8-FT8-F36		
		48.0 (1220)	SS-PS8-FT8-F48		
		60.0 (1530)	SS-PS8-FT8-F60		
		72.0 (1829)	SS-PS8-FT8-F72		
3/4	3/4	24.0 (610)	SS-PS12-FT12-F24	0.53 (13.5)	1.04 (26.4)
		36.0 (915)	SS-PS12-FT12-F36		
1	1	36.0 (915)	SS-PS16-FT16-F36	0.80 (20.3)	1.36 (34.5)
		48.0 (1220)	SS-PS16-FT16-F48		
in.	mm	in. (mm)	——	in. (mm)	in. (mm)
1/4	6	12.0 (305)	SS-PS4-MT6-F12	0.16 (4.1)	0.54 (13.7)
		24.0 (610)	SS-PS4-MT6-F24		
		36.0 (915)	SS-PS4-MT6-F36		
1/2	12	24.0 (610)	SS-PS8-MT12-F24	0.33 (8.4)	0.86 (21.8)
		36.0 (915)	SS-PS8-MT12-F36		

1. All dimensions are for reference only and are subject to change. For dimensions not shown above, please contact FITOK Group or our authorized distributors.

2. Sizes and types listed are standard. Other sizes and types are available on request.

Options

Anti-whip Cable

- 304 stainless steel cable
- Available on hoses without changing the technical parameters of hoses
- Prevent hoses from whipping around and causing serious injuries in the event of fitting blow-off or hose burst

Spring Guard

- 302 stainless steel material
- Available on hoses without changing the technical parameters of hoses
- Protect the hose from abrasion, overbending, and kinking

Fire Jacket

- Braided fiberglass coated with organic, high-temperature-resistant iron oxide red silicone rubber
- Offers excellent flame and fire protection and has good thermal and electrical insulation with resistance to acid & alkili
- Operating temperature from -65 to 500°F (-53 to 260°C) with max. short-term exposure temperature to 3002°F (1650°C).

Ordering Number Description

SS – PS4 – FL6 – FT6 – M1000 – Z – SPF2

End Connection Material	
SS	316 SS
6L	316L SS
S4	304 SS
INC	Alloy 600
A20	Alloy 20
HC	Alloy C-276
TI	Titanium
904L	904L SS

Hose	
PS	PTFE hose (high-pressure)

Nominal Hose Size	
2	1/8"
4	1/4"
6	3/8"
8	1/2"
12	3/4"
16	1"

End Connection 1 Type	
FNS	Female NPT
NS	Male NPT
FRT	Female BSPT
RT	Male BSPT
FMS	Female Metric Thread (for RG)
MS	Male Metric Thread (for RG)
FL	Fractional Tube Fitting
ML	Metric Tube Fitting
FT	Fractional Tube Adapter
MT	Metric Tube Adapter
AN	Male JIC 37° Flare
SAN	Female JIC 37° Flare Swivel
SMS	Female Metric Thread Swivel (for RG)
SNS	Male NPT Swivel
SRT	Male BSPT Swivel
SRG	Female BSPP Swivel (for RG)

End Connection 1 Size	
2	1/8"
4	1/4"
6	3/8" or 6 mm
8	1/2" or 8 mm
10	5/8" or 10 mm
12	3/4" or 12 mm
14	M14 x 1.5
16	1" or 16 mm
18	M18 x 1.5
20	M20 x 1.5

End Connection 2 Type and Size	
	Same as End 1
Specified in the same way as the end connection 1 type and size	

Overall Length	
FXX	XX in. (XX is a multiple of 0.1)
MXX	XX mm (XX is a multiple of 10)

Overbraid	
	304
Z	316

Option	
	None
SP	Spring Guard
SK	Anti-whip Cable
F	Fire Jacket

Cleaning and Packaging	
	FC-01
F2	FC-02

Notes: 1. PS series hoses are not suitable for hydrogen applications. For hydrogen applications, please contact FITOK Group.
2. "Ordering Number Description" is a reference to understand the combination rules of FITOK product part number. Not all combinations are available.

Example: **SS-PS4-SAN4-M500**

SS: End connection material is 316 stainless steel.

PS4: PS series, hose inside diameter is 3/16".

SAN4: End connection 1 is 1/4" female JIC 37° flare swivel.
End connection 2 is 1/4" female JIC 37° flare swivel.

M500: Overall length is 500 mm.

Connections are described based on the following rules:
1. Metric Tube Fitting - Fractional Tube Fitting - Metric Tube Adapters - Fractional Tube Adapters - NPT Threads - BSPT Threads - BSPP Threads - SAE/MS Parallel Threads - 37° Flare - Others
2. Put the sizes from the biggest down to the smallest if they are of the same type.
3. Put the female before male if they are of the same type and size.

Multipurpose Push-on Hoses

MP Series

Features



- Cover: weatherproof, abrasion withstanding and oil-resistant synthetic rubber
- Reinforcement: single-braid high-strength synthetic fiber woven for maximum strength and end connection retention
- Core tube: highly oil-resistant rubber
- End connection materials: stainless steel and brass
- Hose colors: blue, black, green, gray, red and yellow
- Nominal hose size: 1/4" to 3/4"
- Working pressure up to: 300 psig (20.7 bar)
- Working temperature: -40°F to 200°F (-40°C to 93°C)
- End connections reusable
- Custom length available

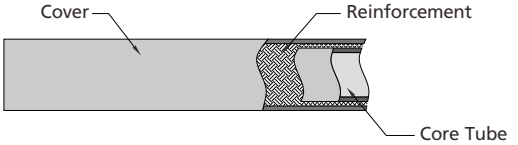

Hose Technical Parameters

Nominal Hose Size	Inside Diameter	Min. Inside Bend Radius	Temperature Range	Working Pressure at -40 to 70°F (-40 to 20°C)	Min. Burst Pressure at 70°F (20°C)
in. (mm)	in. (mm)	in. (mm)	°F (°C)	psig (bar)	psig (bar)
1/4 (6.4)	0.26 (6.6)	2.50 (63.5)	-40 to 200 (-40 to 93)	300 (20.6)	1200 (82.7)
3/8 (9.5)	0.39 (9.9)	3.00 (76.2)			
1/2 (12.7)	0.50 (12.7)	5.00 (127)			
3/4 (19.0)	0.76 (19.3)	7.00 (178)			

Pressure vs. Temperature

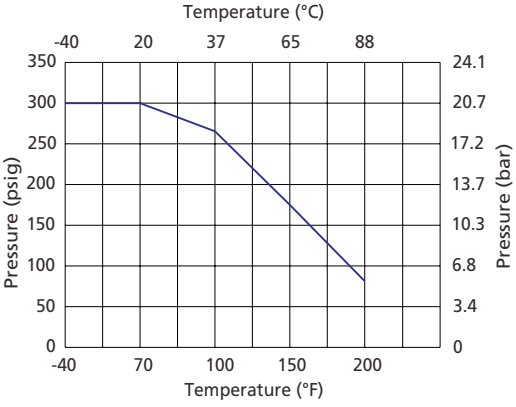

Testing

Every FITOK multipurpose push-on hose assembly is factory tested with pure water at 1.5 times the maximum working pressure.

Cleaning and Packaging

FITOK multipurpose push-on hose components are cleaned in accordance with FITOK *Standard Cleaning and Packaging Process (FC-01)* for general industrial procedures.
Shorter hoses are packed in cartons with suitable protective material, longer hoses are coiled, bagged and boxed or crated.

Caution

Do not reuse the hose.

Multipurpose Push-on Hose End Connections

Tube Fittings

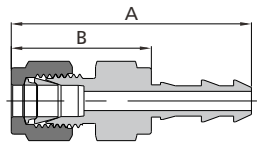

Nominal Hose Size	Tube Fitting Size	Basic Ordering Number	Dimensions, in. (mm)			
			A	B	Minimum Inside Diameter	Maximum Outside Dimension
in.	in.					
1/4	1/4	-MP4-FL4	1.97 (50.0)	1.15 (29.2)	0.16 (4.0)	0.65 (16.5)
3/8	3/8	-MP6-FL6	2.11 (53.6)	1.18 (30.0)	0.27 (6.8)	0.87 (22.0)
1/2	1/2	-MP8-FL8	2.48 (63.0)	1.37 (34.9)	0.37 (9.5)	1.01 (25.7)

Tube Adapters

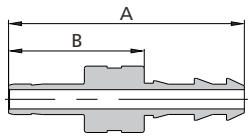

Nominal Hose Size	Tube Adapter Size	Basic Ordering Number	Dimensions, in. (mm)			
			A	B	Minimum Inside Diameter	Maximum Outside Dimension
in.	in.					
1/4	1/4	-MP4-FT4	1.93 (49.0)	1.11 (28.2)	0.16 (4.0)	0.54 (13.8)
3/8	3/8	-MP6-FT6	2.03 (51.6)	1.10 (28.0)	0.27 (6.8)	0.73 (18.5)
1/2	1/2	-MP8-FT8	2.47 (62.7)	1.36 (34.6)	0.37 (9.4)	0.85 (21.5)
3/4	3/4	-MP12-FT12	3.14 (79.8)	1.43 (36.2)	0.58 (14.7)	1.09 (27.7)
in.	mm	——	mm (in.)			
1/4	6	-MP4-MT6	49.0 (1.93)	28.2 (1.11)	4.0 (0.16)	13.8 (0.54)
1/4	8	-MP4-MT8	48.8 (1.92)	28.0 (1.10)	4.0 (0.16)	13.8 (0.54)
3/8	8	-MP6-MT8	52.1 (2.05)	28.5 (1.12)	5.6 (0.22)	18.5 (0.73)
3/8	10	-MP6-MT10	51.6 (2.03)	28.0 (1.10)	6.8 (0.27)	18.5 (0.73)
1/2	12	-MP8-MT12	62.7 (2.47)	34.6 (1.36)	8.8 (0.35)	21.5 (0.85)
3/4	18	-MP12-MT18	79.8 (3.14)	36.2 (1.43)	13.9 (0.55)	27.7 (1.09)

Male NPT Connectors

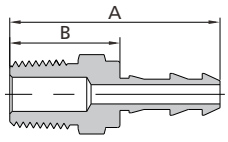

Nominal Hose Size	NPT Tapered Thread Size	Basic Ordering Number	Dimensions, in. (mm)			
			A	B	Minimum Inside Diameter	Maximum Outside Dimension
in.	in.					
1/4	1/4	-MP4-NS4	1.72 (43.7)	0.90 (22.9)	0.16 (4.0)	0.65 (16.5)
3/8	1/4	-MP6-NS4	1.80 (45.7)	0.87 (22.1)	0.27 (6.8)	0.87 (22.0)
3/8	3/8	-MP6-NS6	1.80 (45.7)	0.87 (22.1)	0.27 (6.8)	0.87 (22.0)
1/2	1/2	-MP8-NS8	2.19 (55.6)	1.08 (27.5)	0.37 (9.5)	1.01 (25.7)
3/4	3/4	-MP12-NS12	2.81 (71.4)	1.09 (27.8)	0.61 (15.5)	1.30 (33.0)

Male BSPT Connectors

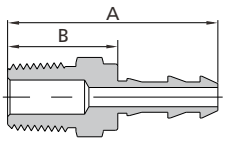

Nominal Hose Size	BSPT Tapered Thread Size	Basic Ordering Number	Dimensions, in. (mm)			
			A	B	Minimum Inside Diameter	Maximum Outside Dimension
in.	in.					
1/4	1/4	-MP4-RT4	1.72 (43.7)	0.90 (22.9)	0.16 (4.0)	0.65 (16.5)
3/8	1/4	-MP6-RT4	1.80 (45.7)	0.87 (22.1)	0.27 (6.8)	0.87 (22.0)
3/8	3/8	-MP6-RT6	1.80 (45.7)	0.87 (22.1)	0.27 (6.8)	0.87 (22.0)
1/2	1/2	-MP8-RT8	2.19 (55.6)	1.08 (27.5)	0.37 (9.5)	1.01 (25.7)
3/4	3/4	-MP12-RT12	2.81 (71.4)	1.09 (27.8)	0.61 (15.5)	1.30 (33.0)

Unions

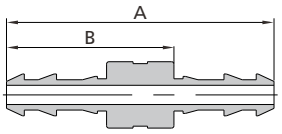

Nominal Hose Size	Basic Ordering Number	Dimensions, in. (mm)			
		A	B	Minimum Inside Diameter	Maximum Outside Dimension
in.					
1/4	-MP4-4	2.19 (55.6)	0.55 (14.0)	0.16 (4.0)	0.54 (13.8)
3/8	-MP6-6	2.38 (60.4)	0.52 (13.2)	0.27 (6.8)	0.73 (18.5)
1/2	-MP8-8	2.75 (69.8)	0.54 (13.6)	0.37 (9.5)	0.85 (21.5)
3/4	-MP12-12	3.96 (100.5)	0.52 (13.3)	0.61 (15.5)	1.09 (27.7)

Hose Ordering Number Description



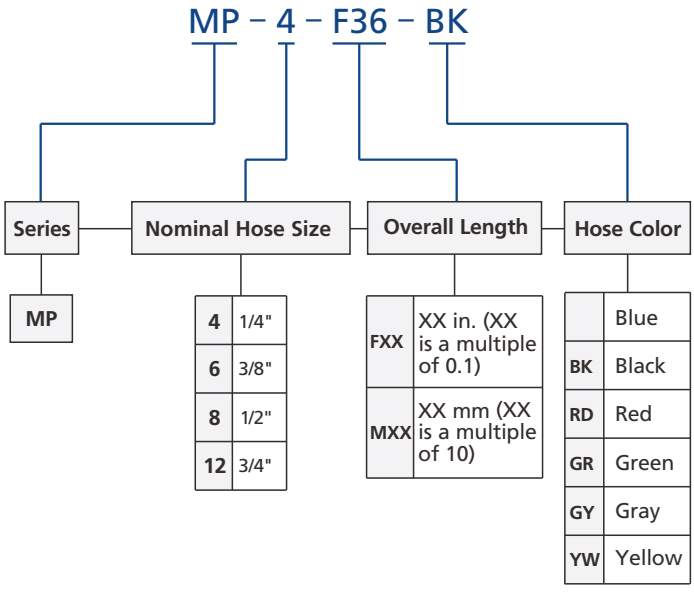

Example: **MP-8-F60-BK**
MP: Hose series
8: Nominal hose size is 1/2".
F60: Overall length is 60".
BK: Hose color is black.

Note: "Ordering Number Description" is a reference to understand the combination rules of FITOK product part number. Not all combinations are available.

Multipurpose Push-On Hose Assemblies



Ordering Number Description

SS – MP4 – FL4 – FT4 – F36 – BK

End Connection Material		Series	Nominal Hose Size		End Connection 1 Type		End Connection 1 Size		End Connection 2 Type and Size		Overall Length		Hose Color	
SS	316 SS	MP	4	1/4"	ML	Metric Tube Fitting	4	1/4"		Same as End 1	FXX	XX in. (XX is a multiple of 0.1)		Blue
B	Brass		6	3/8"	FL	Fractional Tube Fitting	6	3/8" or 6 mm	Specified in the same way as the end connection 1 type and size		MXX	XX mm (XX is a multiple of 10)	BK	Black
S4	304 SS		8	1/2"	MT	Metric Tube Adapter	8	1/2" or 8 mm					RD	Red
904L	904L SS		12	3/4"	FT	Fractional Tube Adapter	10	10 mm					GR	Green
					NS	Male NPT	12	3/4" or 12 mm					GY	Gray
					RT	Male BSPT	18	18 mm					YW	Yellow

Example: **SS-MP4-FT4-F28-BK**

SS: End connection material is 316 stainless steel.
MP4: MP series, nominal hose size is 1/4" .
FT4: End connection 1 is 1/4" tube adapter.
End connection 2 is 1/4" tube adapter.
F28: Overall length is 28".
BK : Hose color is black.

Connections are described based on the following rules:
1. Metric Tube Fitting - Fractional Tube Fitting - Metric Tube Adapters - Fractional Tube Adapters - NPT Threads - BSPT Threads - BSPP Threads - SAE/MS Parallel Threads - 37° Flare - Others
2. Put the sizes from the biggest down to the smallest if they are of the same type.
3. Put the female before male if they are of the same type and size.

Note: "Ordering Number Description" is a reference to understand the combination rules of FITOK product part number. Not all combinations are available.

Thermoplastic Hoses

TH Series

Features



- Cover: Polyurethane, resists oil, weather and abrasion
- Reinforcement: double-braid high-strength synthetic fiber
- Core tube: nylon
- End connection materials: stainless steel
- Nominal hose size: 3/16" to 1"
- End connection sizes: 1/4" to 1" and 6 mm to 25 mm
- Working pressure up to: 5000 psig (345 bar)
- Working temperature: -40°F to 200°F (-40°C to 93°C)
- Custom length available

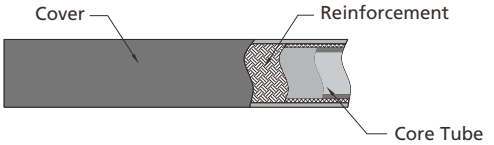

Technical Parameters

Thermoplastic Hydraulic Hose (SAE 100R7)

Nominal Hose Size	Min. Inside Bend Radius	Inside Diameter	Temperature Range	Working Pressure at 70°F (20°C)	Min. Burst Pressure at 70°F (20°C)	Specification
in. (mm)	in. (mm)	in. (mm)	°F (°C)	psig (bar)	psig (bar)	
3/16 (4.8)	1.58 (40)	0.19 (4.8)	-40 to 200 (-40 to 93)	3000 (207)	12000 (828)	SAE J517 100R7
1/4 (6.4)	1.97 (50)	0.25 (6.4)		2750 (189)	11000 (758)	
5/16 (8.0)	2.36 (60)	0.31 (7.9)		2500 (173)	10000 (690)	
3/8 (9.6)	2.95 (75)	0.38 (9.8)		2250 (155)	9000 (620)	
1/2 (12.7)	3.74 (95)	0.50 (12.7)		2000 (137)	8000 (551)	

Thermoplastic Hydraulic Hose (SAE 100R8)

Nominal Hose Size	Min. Inside Bend Radius	Inside Diameter	Temperature Range	Working Pressure at 70°F (20°C)	Min. Burst Pressure at 70°F (20°C)	Specification
in. (mm)	in. (mm)	in. (mm)	°F (°C)	psig (bar)	psig (bar)	
3/16 (4.8)	2.00 (50.8)	0.19 (4.8)	-40 to 200 (-40 to 93)	5000 (344)	20000 (1378)	SAE J517 100R8
1/4 (6.4)	2.00 (50.8)	0.25 (6.4)		5000 (344)	20000 (1378)	
3/8 (9.6)	2.50 (63.5)	0.38 (9.8)		4000 (275)	16000 (1102)	
1/2 (12.7)	4.00 (102)	0.50 (12.7)		3500 (241)	14000 (964)	
3/4 (19.0)	6.50 (165)	0.75 (19.0)		2250 (155)	9000 (620)	
1 (25.4)	10.0 (254)	1.00 (25.4)		2000 (137)	8000 (551)	

Testing

Every FITOK thermoplastic hose assembly is factory tested with pure water at 1.5 times the maximum working pressure.

Cleaning and Packaging

FITOK thermoplastic hose components are cleaned in accordance with FITOK *Standard Cleaning and Packaging Process (FC-01)* for general industrial procedures.
Shorter hoses are packed in cartons with suitable protective material, longer hoses are coiled, bagged and boxed or crated.

Options

Anti-whip Cable

- ◎ 304 stainless steel cable
- ◎ Available on hoses without changing the technical parameters of hoses
- ◎ Prevent hoses from whipping around and causing serious injuries in the event of fitting blow-off or hose burst

Thermoplastic Hose Assemblies

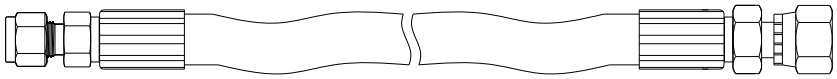

Ordering Number Description

SS – TH4 – FL4 – SAN4 – M1000 – R7 – SK

End Connection Material	Series	Nominal Hose Size	End Connection 1 Type	End Connection 1 Size	End Connection 2 Type and Size	Overall Length	Hose Code	Option
SS 316 SS	TH	3 3/16"	ML Metric Tube Fitting	4 1/4"	Same as End 1	FXX XX in. (XX is a multiple of 0.1)	R7 100R7	None
S4 304 SS		4 1/4"	FL Fractional Tube Fitting	6 3/8" or 6 mm	Specified in the same way as the end connection 1 type and size	MXX XX mm (XX is a multiple of 10)	R8 100R8	SK Anti-whip Cable
904L 904L SS		5 5/16"	MT Metric Tube Adapter	8 1/2" or 8 mm				
		6 3/8"	FT Fractional Tube Adapter	10 5/8" or 10 mm				
		8 1/2"	NS Male NPT	12 3/4" or 12 mm				
			RT Male BSPT	16 1" or 16 mm				
			SRG Female BSPP Swivel (for RG)	25 25 mm				
			FMS Female Metric Thread (for RG-M)					
			MS Male Metric Thread (for RG-M)					
			SMS Female Metric Thread Swivel (for RG)					
			SAN Female JIC 37° Flare Swivel					

Note: "Ordering Number Description" is a reference to understand the combination rules of FITOK product part number. Not all combinations are available.

Example: **SS-TH4-FL4-NS4-F36-R7**
SS: End connection material is 316 stainless steel.
TH4: TH series, nominal hose size is 1/4"
FL4: End connection 1 is 1/4" tube fitting.
NS4 : End connection 2 is 1/4 male NPT.
F36 : Overall length is 36"
R7 : SAE J517 100R7.

Connections are described based on the following rules:
1. Metric Tube Fitting - Fractional Tube Fitting - Metric Tube Adapters - Fractional Tube Adapters - NPT Threads - BSPT Threads - BSPP Threads - SAE/MS Parallel Threads - 37° Flare - Others
2. Put the sizes from the biggest down to the smallest if they are of the same type.
3. Put the female before male if they are of the same type and size.

Compact Steel Wire Braided Hydraulic Hoses

HCH Series

Introduction



HCH Series Compact Steel Wire Braided Hydraulic Hoses are designed with a synthetic rubber core for oil based or water based fluids. They feature multiple layers of high-tensile steel wire braiding for reinforcement, along with a weather-resistant, oil-resistant synthetic rubber cover. This construction provides excellent high-pressure resistance and a minimal bend radius. These hoses are primarily used with oil-based liquids such as hydraulic oil, gasoline, diesel, lubricating oil, as well as biodegradable hydraulic fluids, fire-resistant synthetic polyol esters, and other similar media.

Features

- Cover: Weatherproof, oil-resistant synthetic rubber
- Reinforcement: Double-layer of high-tensile steel wire braid
- Core tube: Synthetic rubber for oil based or water based fluids
- End connection material: Stainless steel
- Nominal hose size: 1/4" to 1/2"
- End connection sizes: 1/4" to 1" and 6 mm to 25 mm
- Working pressure up to 5800 psig (400 bar)
- Working temperature: -40°F to 212°F (-40°C to 100°C)

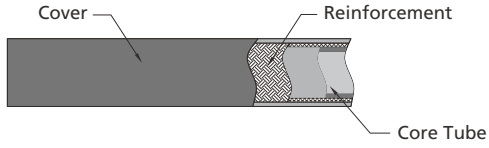

Hose Technical Parameters

Nominal Hose Size	Inside Diameter	Min. Bend Radius	Working Pressure at 70°F (20°C)	Min. Burst Pressure at 70°F (20°C)	Standard
in. (mm)	in. (mm)	in. (mm)	psig (bar)	psig (bar)	
1/4 (6.4)	0.26 (6.6)	2.95 (75)	5800 (400)	23200 (1600)	IS0 11237 2SC EN 857 2SC
1/2 (12.7)	0.51 (13.0)	5.12 (130)	3990 (275)	15950 (1100)	

Testing

Every FITOK hydraulic hose assembly is factory tested with pure water at 2 times the maximum working pressure.

Cleaning and Packaging

FITOK hydraulic hose components are cleaned in accordance with FITOK Standard Cleaning and Packaging Process (FC-01). Shorter hoses are packed in cartons with suitable protective material, longer hoses are coiled, bagged and boxed or crated.

Ordering Number Description

SS – HCH4 – FL4 – NS4 – M1000

End Connection Material

SS	316 SS
S4	304 SS

Series

HCH	

Nominal Hose Size

4	1/4"
8	1/2"

End Connection 1 Type

ML	Metric Tube Fitting
FL	Fractional Tube Fitting
MT	Metric Tube Adapter
FT	Fractional Tube Adapter
NS	Male NPT
RT	Male BSPT
SRG	Female BSPP Swivel (for RG)
FMS	Female Metric Thread (for RG-M)
MS	Male Metric Thread (for RG-M)
SMS	Female Metric Thread Swivel (for RG)
SAN	Female JIC 37° Flare Swivel

End Connection 1 Size

4	1/4"
6	3/8" or 6 mm
8	1/2" or 8 mm
10	5/8" or 10 mm
12	3/4" or 12 mm
16	1" or 16 mm
25	25 mm

End Connection 2 Type and Size

	Same as End Connection 1
Specified in the same way as End Connection 1	

Overall Length

FXX	XX in. (XX is a multiple of 0.1)
MXX	XX mm (XX is a multiple of 10)

Note: "Ordering Number Description" is a reference to understand the combination rules of FITOK product part number. Not all combinations are available.

Example: **SS-HCH4-FL4-NS4-F36**

SS: End connection material is 316 stainless steel

HCH4: HCH series, nominal hose size is 6.4 mm

FL4: End connection 1 is 1/4" tube fitting

NS4: End connection 2 is 1/4" male NPT

F36: Overall length is 36"

Connections are described based on the following rules:

1. Metric Tube Fitting - Fractional Tube Fitting - Metric Tube Adapters - Fractional Tube Adapters - NPT Threads - BSPT Threads - BSPP Threads - SAE/MS Parallel Threads - 37° Flare - Others
2. Put the sizes from the biggest down to the smallest if they are of the same type.
3. Put the female before male if they are of the same type and size.

Hose Connectors and Sleeves

HC Series

Features

- Used to connect soft plastic or rubber tubing
- Working pressures and working temperatures are wider than those of the connected hoses
- Stainless steel or brass is available
- Shank design holds tubing inside diameter securely
- Hose connectors are reusable



Hose Connectors

Tube Fittings

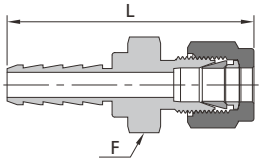

Hose ID	Tube Size	Basic Ordering Number	Dimensions		
			Minimum Inside Diameter	F	L
in.	in.		in. (mm)	in.	in. (mm)
1/8	1/8	-HC-F2-FL2	0.08 (2.0)	7/16	1.42 (36.1)
1/4	1/8	-HC-F4-FL2	0.09 (2.3)	7/16	1.81 (46.0)
	1/4	-HC-F4-FL4	0.19 (4.8)	9/16	1.92 (48.8)
3/8	1/4	-HC-F6-FL4	0.19 (4.8)	9/16	1.99 (50.6)
	3/8	-HC-F6-FL6	0.28 (7.1)	3/4	2.06 (52.3)
1/2	1/2	-HC-F8-FL8	0.38 (9.7)	7/8	2.24 (56.9)
mm	mm	——	mm (in.)	mm	mm (in.)
6	6	-HC-M6-ML6	4.8 (0.19)	14	49.5 (1.95)
8	8	-HC-M8-ML8	6.4 (0.25)	16	49.8 (1.96)
	10	-HC-M8-ML10	6.4 (0.25)	18	51.6 (2.03)
10	10	-HC-M10-ML10	7.9 (0.31)	19	52.3 (2.06)
12	12	-HC-M12-ML12	9.7 (0.38)	22	57.4 (2.26)

Tube Adapters

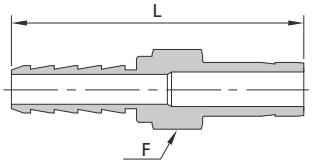

Hose ID	Tube Size	Basic Ordering Number	Dimensions		
			Minimum Inside Diameter	F	L
in.	in.		in. (mm)	in.	in. (mm)
1/8	1/8	-HC-F2-FT2	0.08 (2.0)	5/16	1.37 (34.8)
	1/4	-HC-F2-FT4	0.09 (2.3)	3/8	1.47 (37.3)
1/4	1/4	-HC-F4-FT4	0.19 (4.8)	7/16	1.86 (47.2)
	3/8	-HC-F4-FT6	0.19 (4.8)	7/16	1.92 (48.8)
5/16	1/4	-HC-F5-FT4	0.19 (4.8)	7/16	1.94 (49.3)
3/8	1/4	-HC-F6-FT4	0.19 (4.8)	9/16	1.94 (49.3)
	3/8	-HC-F6-FT6	0.28 (7.1)	9/16	2.00 (50.8)
	1/2	-HC-F6-FT8	0.30 (7.6)	5/8	2.26 (57.4)
1/2	3/8	-HC-F8-FT6	0.28 (7.1)	11/16	2.07 (52.6)
	1/2	-HC-F8-FT8	0.38 (9.7)	11/16	2.33 (59.2)
3/4	3/4	-HC-F12-FT12	0.63 (16.0)	13/16	2.50 (63.5)
1	1	-HC-F16-FT16	0.80 (20.3)	1 3/8	3.03 (77.0)

Male NPT Connectors

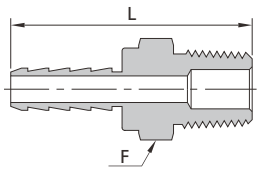

Hose ID	NPT Tapered Thread Size	Basic Ordering Number	Dimensions		
			Minimum Inside Diameter	F	L
in.	in.		in. (mm)	in.	in. (mm)
1/8	1/8	-HC-F2-NS2	0.08 (2.0)	7/16	1.08 (27.4)
	1/4	-HC-F2-NS4	0.08 (2.0)	9/16	1.26 (32.0)
3/16	1/8	-HC-F3-NS2	0.13 (3.3)	7/16	1.27 (32.2)
	1/4	-HC-F3-NS4	0.13 (3.3)	9/16	1.45 (36.8)
1/4	1/8	-HC-F4-NS2	0.19 (4.8)	7/16	1.47 (37.3)
	1/4	-HC-F4-NS4	0.19 (4.8)	9/16	1.65 (41.9)
	3/8	-HC-F4-NS6	0.19 (4.8)	11/16	1.66 (42.2)
	1/2	-HC-F4-NS8	0.19 (4.8)	7/8	1.85 (47.0)
5/16	1/8	-HC-F5-NS2	0.19 (4.8)	7/16	1.55 (39.4)
	1/4	-HC-F5-NS4	0.19 (4.8)	9/16	1.73 (43.9)
	3/8	-HC-F5-NS6	0.19 (4.8)	11/16	1.74 (44.2)
	1/2	-HC-F5-NS8	0.19 (4.8)	7/8	1.96 (49.8)
3/8	1/4	-HC-F6-NS4	0.30 (7.6)	9/16	1.73 (43.9)
	3/8	-HC-F6-NS6	0.30 (7.6)	11/16	1.74 (44.2)
	1/2	-HC-F6-NS8	0.30 (7.6)	7/8	1.96 (49.8)
1/2	1/4	-HC-F8-NS4	0.30 (7.6)	11/16	1.80 (45.7)
	3/8	-HC-F8-NS6	0.38 (9.7)	11/16	1.81 (46.0)
	1/2	-HC-F8-NS8	0.38 (9.7)	7/8	2.03 (51.6)
5/8	3/8	-HC-F10-NS6	0.38 (9.7)	1 1/16	1.88 (47.8)
	1/2	-HC-F10-NS8	0.47 (11.9)	1 1/16	2.07 (52.6)
	3/4	-HC-F10-NS12	0.50 (12.7)	1 1/16	2.07 (52.6)
3/4	1/2	-HC-F12-NS8	0.47 (11.9)	1 1/16	2.14 (54.4)
	3/4	-HC-F12-NS12	0.63 (16.0)	1 1/16	2.14 (54.4)
	1	-HC-F12-NS16	0.63 (16.0)	1 3/8	2.43 (61.7)
1	3/4	-HC-F16-NS12	0.63 (16.0)	1 3/8	2.38 (60.5)
	1	-HC-F16-NS16	0.88 (22.4)	1 3/8	2.57 (65.3)

Female NPT Connectors

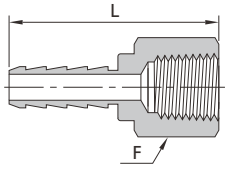

Hose ID	NPT Size	Basic Ordering Number	Dimensions		
			Minimum Inside Diameter	F	L
in.	in.		in. (mm)	in.	in. (mm)
1/8	1/8	-HC-F2-FNS2	0.08 (2.0)	9/16	1.11 (28.2)
	1/4	-HC-F2-FNS4	0.08 (2.0)	3/4	1.26 (32.0)
3/16	1/8	-HC-F3-FNS2	0.13 (3.3)	9/16	1.29 (32.8)
	1/4	-HC-F3-FNS4	0.13 (3.3)	3/4	1.44 (36.6)
1/4	1/8	-HC-F4-FNS2	0.19 (4.8)	9/16	1.47 (37.3)
	1/4	-HC-F4-FNS4	0.19 (4.8)	3/4	1.64 (41.7)
	3/8	-HC-F4-FNS6	0.19 (4.8)	7/8	1.71 (43.4)
5/16	1/4	-HC-F5-FNS4	0.19 (4.8)	3/4	1.73 (43.9)
	3/8	-HC-F5-FNS6	0.19 (4.8)	7/8	1.82 (46.2)
3/8	1/4	-HC-F6-FNS4	0.30 (7.6)	3/4	1.69 (42.9)
	3/8	-HC-F6-FNS6	0.30 (7.6)	7/8	1.78 (45.2)
	1/2	-HC-F6-FNS8	0.30 (7.6)	1 1/16	2.03 (51.6)
1/2	1/2	-HC-F8-FNS8	0.38 (9.7)	1 1/16	2.13 (54.1)

Male BSPT Connectors

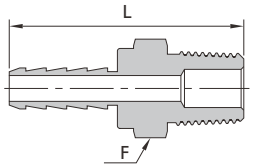

Hose ID	BSPT Tapered Thread Size	Basic Ordering Number	Dimensions		
			Minimum Inside Diameter	F	L
in.	in.		in. (mm)	in.	in. (mm)
1/8	1/8	-HC-F2-RT2	0.08 (2.0)	7/16	1.28 (32.5)
	1/4	-HC-F2-RT4	0.08 (2.0)	9/16	1.40 (35.5)
3/16	1/8	-HC-F3-RT2	0.13 (3.3)	7/16	1.40 (35.5)
	1/4	-HC-F3-RT4	0.13 (3.3)	9/16	1.58 (40.1)
1/4	1/8	-HC-F4-RT2	0.19 (4.8)	716	1.47 (37.3)
	1/4	-HC-F4-RT4	0.19 (4.8)	9/16	1.65 (41.9)
	3/8	-HC-F4-RT6	0.19 (4.8)	11/16	1.66 (42.2)
	1/2	-HC-F4-RT8	0.19 (4.8)	7/8	1.90 (48.3)
5/16	1/8	-HC-F5-RT2	0.19 (4.8)	7/16	1.67 (42.4)
	1/4	-HC-F5-RT4	0.19 (4.8)	9/16	1.86 (47.2)
	3/8	-HC-F5-RT6	0.19 (4.8)	11/16	1.87 (47.5)
	1/2	-HC-F5-RT8	0.19 (4.8)	7/8	2.10 (53.3)
3/8	1/4	-HC-F6-RT4	0.30 (7.6)	9/16	1.73 (43.9)
	3/8	-HC-F6-RT6	0.30 (7.6)	11/16	1.74 (44.2)
	1/2	-HC-F6-RT8	0.30 (7.6)	7/8	1.96 (49.8)
1/2	1/4	-HC-F8-RT4	0.30 (7.6)	11/16	1.80 (45.7)
	3/8	-HC-F8-RT6	0.38 (9.7)	11/16	1.81 (46.0)
	1/2	-HC-F8-RT8	0.38 (9.7)	7/8	2.03 (51.6)
5/8	3/8	-HC-F10-RT6	0.38 (9.7)	1 1/16	1.88 (47.8)
	1/2	-HC-F10-RT8	0.47 (11.9)	1 1/16	2.07 (52.6)
	3/4	-HC-F10-RT12	0.50 (12.7)	1 1/16	2.07 (52.6)
3/4	1/2	-HC-F12-RT8	0.47 (11.9)	1 1/16	2.14 (54.4)
	3/4	-HC-F12-RT12	0.63 (16.0)	1 1/16	2.14 (54.4)
	1	-HC-F12-RT16	0.63 (16.0)	1 3/8	2.43 (61.7)
1	3/4	-HC-F16-RT12	0.63 (16.0)	1 3/8	2.38 (60.5)
	1	-HC-F16-RT16	0.88 (22.4)	1 3/8	2.57 (65.3)

Female BSPT Connectors

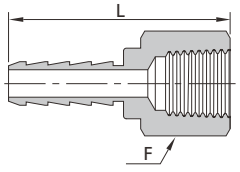

Hose ID	BSPT Size	Basic Ordering Number	Dimensions		
			Minimum Inside Diameter	F	L
in.	in.		in. (mm)	in.	in. (mm)
1/8	1/8	-HC-F2-FRT2	0.08 (2.0)	9/16	1.11 (28.2)
	1/4	-HC-F2-FRT4	0.08 (2.0)	3/4	1.26 (32.0)
3/16	1/8	-HC-F3-FRT2	0.13 (3.3)	9/16	1.29 (32.8)
	1/4	-HC-F3-FRT4	0.13 (3.3)	3/4	1.44 (36.6)
1/4	1/8	-HC-F4-FRT2	0.19 (4.8)	9/16	1.47 (37.3)
	1/4	-HC-F4-FRT4	0.19 (4.8)	3/4	1.64 (41.7)
	3/8	-HC-F4-FRT6	0.19 (4.8)	7/8	1.71 (43.4)
5/16	1/4	-HC-F5-FRT4	0.19 (4.8)	3/4	1.73 (43.9)
	3/8	-HC-F5-FRT6	0.19 (4.8)	7/8	1.82 (46.2)
3/8	1/4	-HC-F6-FRT4	0.30 (7.6)	3/4	1.69 (42.9)
	3/8	-HC-F6-FRT6	0.30 (7.6)	7/8	1.78 (45.2)
	1/2	-HC-F6-FRT8	0.30 (7.6)	1 1/16	2.03 (51.6)
1/2	1/2	-HC-F8-FRT8	0.38 (9.7)	1 1/16	2.13 (54.1)

Metric Thread Connectors

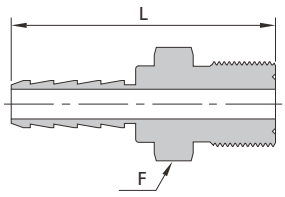

Hose I.D.	Thread Size	Basic Ordering Number	Dimensions		
			Minimum Inside Diameter	F	L
mm	in.		in. (mm)	mm	in. (mm)
6	M10 x 1	-HC-M6-MS10	0.18 (4.6)	12	1.54 (39.6)
	M12 x 1.5	-HC-M6-MS12	0.18 (4.6)	14	1.59 (40.4)
	M14 x 1.5	-HC-M6-MS14	0.18 (4.6)	15	1.66 (42.2)
8	M14 x 1.5	-HC-M8-MS14	0.19 (4.8)	15	1.74 (44.2)
	M16 x 1.5	-HC-M8-MS16	0.19 (4.8)	18	1.82 (46.2)
10	M16 x 1.5	-HC-M10-MS16	0.31 (7.9)	18	1.82 (46.2)
	M18 x 1.5	-HC-M10-MS18	0.31 (7.9)	19	1.86 (47.2)
12	M20 x 1.5	-HC-M12-MS20	0.35 (8.9)	22	1.98 (50.3)
	M22 x 1.5	-HC-M12-MS22	0.35 (8.9)	24	2.08 (52.8)

Hose Connector Sleeves

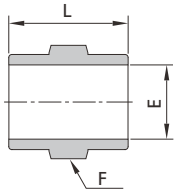

◎ Material: Aluminum
◎ Reusable

Hose I.D.	Hose O.D.	Ordering Number	Dimensions, in. (mm)		
in.	in.		E	F	L
1/8	1/4	AL-HC-F2-F4	0.26 (6.6)	3/8	0.40 (10.2)
1/4	3/8	AL-HC-F4-F6	0.41 (10.4)	9/16	0.79 (20.1)
1/4	7/16	AL-HC-F4-F7	0.46 (11.7)	5/8	0.79 (20.1)
1/4	1/2	AL-HC-F4-F8	0.52 (13.2)	11/16	0.79 (20.1)
5/16	7/16	AL-HC-F5-F7	0.48 (12.2)	5/8	0.87 (22.1)
3/8	1/2	AL-HC-F6-F8	0.55 (14.0)	11/16	0.87 (22.1)
3/8	9/16	AL-HC-F6-F9	0.61 (15.5)	3/4	0.87 (22.1)
7/16	5/8	AL-HC-F7-F10	0.69 (17.5)	13/16	0.94 (23.9)
1/2	11/16	AL-HC-F8-F11	0.76 (19.3)	7/8	0.94 (23.9)
3/4	1	AL-HC-F12-F16	1.10 (27.9)	1 1/4	1.07 (27.2)

Hose Clamps

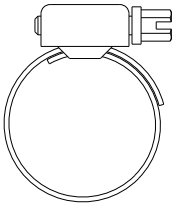

◎ Material: 304 SS
◎ Reusable

Min. Hose O.D.	Max. Hose O.D.	Ordering Number
mm	mm	
8	12	S4-CP8-12
10	16	S4-CP10-16
12	20	S4-CP12-20
16	25	S4-CP16-25
20	32	S4-CP20-32
25	40	S4-CP25-40

1. Sizes and types listed are standard. Other sizes and types are available upon request.
2. All dimensions are for reference only and are subject to change. For dimensions not shown above, please contact FITOK Group or our authorized distributors.

Ordering Number Description

SS – HC – F4 – NS4

End Connection Material		Series	End Connection 1 Type		End Connection 1 Size		End Connection 2 Type		End 2 Connection Size	
SS	316 SS	HC	F	Fractional	4	1/4" or 4 mm	ML	Metric Tube Fitting	4	1/4"
S4	304 SS		M	Metric	6	3/8" or 6 mm	FL	Fractional Tube Fitting	6	3/8" or 6 mm
A20	Alloy 20				8	1/2" or 8 mm	MT	Metric Tube Adapter	8	1/2" or 8 mm
INC	Alloy 600				10	5/8" or 10 mm	FT	Fractional Tube Adapter	10	5/8" or 10 mm
HC	Alloy C-276				12	3/4" or 12 mm	FNS	Female NPT	12	3/4" or 12 mm
TI	Titanium				16	1" or 16 mm	NS	Male NPT	16	1" or 16 mm
AL	Aluminum						FRT	Female BSPT	18	M18 x 1.5
904L	904L SS						RT	Male BSPT	20	M20 x 1.5
							FMS	Female Metric Thread (for RG-M)		
							MS	Male Metric Thread (for RG-M)		

Example: SS-HC-F4-FT6

SS: End connection material is 316 stainless steel.
HC: HC series.
F4: Hose ID is 1/4".
FT6: 3/8" tube adapter.

Note: "Ordering Number Description" is a reference to understand the combination rules of FITOK product part number. Not all combinations are available.

Quick-Connects

QC, QF, QV, QM, QTM and QP Series



Contents

General Service Quick-Connects
QC Series



D-31

Full Flow Quick-Connects
QF Series



D-40

Double-End Shutoff, High Flow Quick-Connects
QV Series



D-45

Miniature Quick-Connects
QM Series



D-48

PTFE-Sealed Quick-Connects
QTM Series



D-52

Flat Face Quick-Connects
QP Series



D-61

General Service Quick-Connects

QC Series

Features

- Working pressure up to: 3000 psig (207 bar)
- Materials: Stainless steel or brass
- Reliable, leak-tight O-ring seal for vacuum or pressure systems
- Interchangeable with other key manufacturers' products
- Single-end shutoff, double-end shutoff and full-flow model available
- Push-to-connect coupling to enable quick and easy operation
- Locking mechanism with large contact area to ensure reliable stem retainment
- Stem protector, body protector and keyed options available

Single-end Shutoff (SESO)

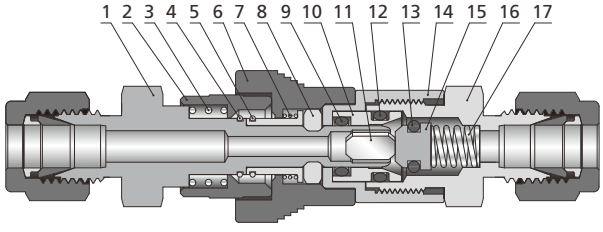

Double-end Shutoff (DESO) - Red Stem Sleeve

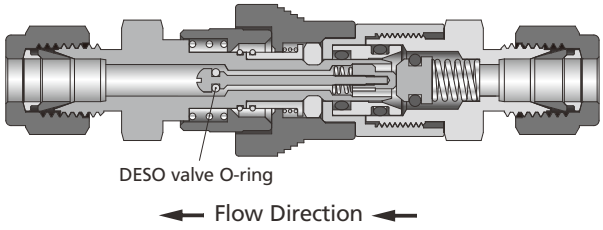

Full-flow Quick-Connects

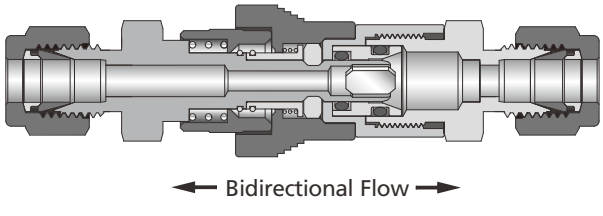

Standard Materials of Construction

Item	Component	Stainless Steel	Brass
		Material Grade/ASTM Specification	
1	Stem	316 SS/A479	Brass C36000/B16
2	DESO stem sleeve	PTFE-coated 316L SS/A479	PTFE-coated Brass C36000/B16
	SESO stem sleeve	316L SS/A479	Brass C36000/B16
3	Springs	316 SS/A313	
4	Snap rings	316 SS/A313	
5			
6	Body sleeve	316L SS/A479	Brass C36000/B16
7	Springs	316 SS/A313	
8	Locking dogs	Xylan®-coated 316 SS powdered metal	
9	O-rings	Fluorocarbon FKM	Buna N
10	Sliding sleeve	316 SS/A479	Brass C36000/B16
11	SESO stem insert	316 SS/A240	Brass C26000/B36
12	O-rings	Fluorocarbon FKM	Buna N
13	O-rings	Fluorocarbon FKM	Buna N
14	Housing	316L SS/A479	Brass C36000/B16
15	Plug	316 SS/A479	Brass C36000/B16
16	Body	316 SS/A479	Brass C36000/B16
17	Springs	316 SS/A313	
18	Lubricants	Silicone-based	

Insertion Depth

Series	Insertion Depth	
	SESO	DESO
	in. (mm)	in. (mm)
QC4	1.09 (27.7)	1.15 (29.2)
QC6	1.18 (30.0)	1.30 (33.0)
QC8	1.48 (37.6)	1.68 (42.7)

In order to measure overall length in the coupled position, the insertion depth should be deducted from any overall stem and body combination length.

Spillage and Air Inclusion

Spillage - the amount of system fluid that escapes when a quick-connect is uncoupled (DESO only)
Air Inclusion - the amount of air trapped between the body and stem that enters the system when a quick-connect is coupled (DESO only)

Series	Max. Spillage cm^3	Max. Air Inclusion cm^3
QC4	0.3	0.3
QC6	1.0	1.0
QC8	3.0	3.0

Pressure-Temperature Ratings

Pressure rating restrictions apply when coupling and uncoupling (DESO only). Refer to the tables below for specific data.

QC4 Series

Material	316 SS			Brass
O-Ring Material	Fluorocarbon FKM	Ethylene propylene	Perfluoro-carbon FFKM	Buna N
Tempera-ture °F (°C)	Pressure Rating, psig (bar)			
Coupled				
-50 (-45)	—	3000 (206)	—	—
0 (-17)	3000 (206)	3000 (206)	3000 (206)	2000 (137)
10 (-12)	3000 (206)	3000 (206)	3000 (206)	2000 (137)
60 (15)	3000 (206)	3000 (206)	3000 (206)	2000 (137)
100 (37)	3000 (206)	3000 (206)	3000 (206)	2000 (137)
150 (65)	2750 (189)	2750 (189)	2750 (189)	1300 (89.5)
200 (93)	2300 (158)	2300 (158)	2300 (158)	700 (48)
250 (121)	1850 (127)	1850 (127)	1850 (127)	300 (20.6)
300 (148)	1400 (96.4)	1400 (96.4)	1400 (96.4)	—
350 (176)	950 (65.4)	—	950 (65.4)	—
400 (204)	500 (34.4)	—	500 (34.4)	—
500 (260)	—	—	150 (10.3)	—
Uncoupled and When Coupling and Uncoupling				
70 (20)	250 (17.2)			

QC6 Series

Material	316 SS			Brass
O-Ring Material	Fluorocarbon FKM	Ethylene propylene	Perfluoro-carbon FFKM	Buna N
Tempera-ture °F (°C)	Pressure Rating, psig (bar)			
Coupled				
-50 (-45)	—	1500 (103)	—	—
0 (-17)	1500 (103)	1500 (103)	1500 (103)	1000 (68.9)
10 (-12)	1500 (103)	1500 (103)	1500 (103)	1000 (68.9)
60 (15)	1500 (103)	1500 (103)	1500 (103)	1000 (68.9)
100 (37)	1500 (103)	1500 (103)	1500 (103)	1000 (68.9)
150 (65)	1350 (93.0)	1350 (93.0)	1350 (93.0)	700 (48.2)
200 (93)	1150 (79.2)	1150 (79.2)	1150 (79.2)	450 (31.0)
250 (121)	970 (66.8)	970 (66.8)	970 (66.8)	300 (20.6)
300 (148)	750 (51.6)	750 (51.6)	750 (51.6)	—
350 (176)	580 (39.9)	—	580 (39.9)	—
400 (204)	400 (27.5)	—	400 (27.5)	—
500 (260)	—	—	150 (10.3)	—
Uncoupled and When Coupling and Uncoupling				
70 (20)	250 (17.2)			

QC8 Series

Material	316 SS			Brass
O-Ring Material	Fluorocarbon FKM	Ethylene propylene	Perfluoro-carbon FFKM	Buna N
Tempera-ture °F (°C)	Pressure Rating, psig (bar)			
Coupled				
-50 (-45)	—	750 (51.6)	—	—
0 (-17)	750 (51.6)	750 (51.6)	750 (51.6)	500 (34.4)
10 (-12)	750 (51.6)	750 (51.6)	750 (51.6)	500 (34.4)
60 (15)	750 (51.6)	750 (51.6)	750 (51.6)	500 (34.4)
100 (37)	750 (51.6)	750 (51.6)	750 (51.6)	500 (34.4)
150 (65)	680 (46.8)	680 (46.8)	680 (46.8)	400 (27.5)
200 (93)	600 (41.3)	600 (41.3)	600 (41.3)	350 (24.1)
250 (121)	520 (35.8)	520 (35.8)	520 (35.8)	300 (20.6)
300 (148)	440 (30.3)	440 (30.3)	440 (30.3)	—
350 (176)	360 (24.8)	—	360 (24.8)	—
400 (204)	300 (20.6)	—	300 (20.6)	—
500 (260)	—	—	150 (10.3)	—
Uncoupled and When Coupling and Uncoupling				
70 (20)	250 (17.2)			

Dimensions

SESO Stems

Tube Fitting

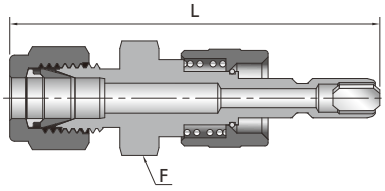

Fitting Size in.	Basic Ordering Number	Flow Coefficient (Cv)	Dimensions F in.	Dimensions L in. (mm)
1/8	-QC4-FL2-S	0.08	5/8	2.32 (58.9)
1/4	-QC4-FL4-S	0.3	5/8	2.36 (59.9)
3/8	-QC6-FL6-S	1.0	3/4	2.52 (64.0)
1/2	-QC8-FL8-S	2.4	15/16	2.96 (75.2)
mm	——	——	mm	mm (in.)
6	-QC4-ML6-S	0.3	16	59.9 (2.36)
10	-QC6-ML10-S	1.0	19	67.3 (2.65)
12	-QC8-ML12-S	2.4	24	75.2 (2.96)

Male NPT

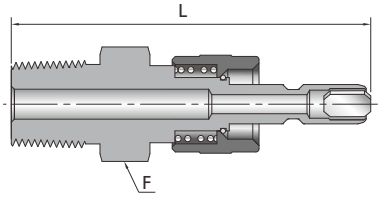

NPT Size in.	Basic Ordering Number	Flow Coefficient (Cv)	Dimensions F in.	Dimensions L in. (mm)
1/8	-QC4-NS2-S	0.3	5/8	2.07 (52.6)
1/4	-QC4-NS4-S	0.3	5/8	2.22 (56.4)
1/4	-QC6-NS4-S	0.8	3/4	2.32 (58.9)
3/8	-QC6-NS6-S	0.8	3/4	2.35 (59.7)
1/2	-QC8-NS8-S	2.0	15/16	2.84 (72.1)

Female NPT

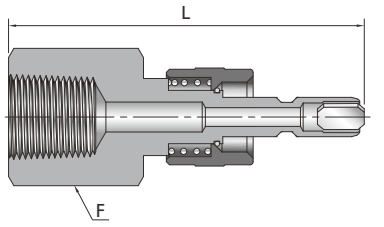

NPT Size in.	Basic Ordering Number	Flow Coefficient (Cv)	Dimensions F in.	Dimensions L in. (mm)
1/8	-QC4-FNS2-S	0.3	5/8	2.01 (51.1)
1/4	-QC4-FNS4-S	0.3	3/4	2.26 (57.4)
1/4	-QC6-FNS4-S	0.8	3/4	2.35 (59.7)
3/8	-QC6-FNS6-S	0.8	7/8	2.35 (59.7)
1/2	-QC8-FNS8-S	2.0	1 1/16	2.82 (71.6)

Male BSPT

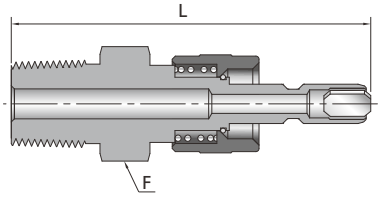

BSPT Size in.	Basic Ordering Number	Flow Coefficient (Cv)	Dimensions F in.	Dimensions L in. (mm)
1/8	-QC4-RT2-S	0.3	5/8	2.07 (52.6)
1/4	-QC4-RT4-S	0.3	5/8	2.22 (56.4)
1/4	-QC6-RT4-S	0.8	3/4	2.32 (58.9)
3/8	-QC6-RT6-S	0.8	3/4	2.35 (59.7)
1/2	-QC8-RT8-S	2.0	15/16	2.84 (72.1)

Female BSPT

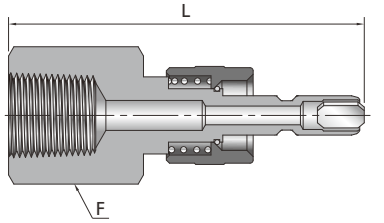

BSPT Size in.	Basic Ordering Number	Flow Coefficient (Cv)	Dimensions F in.	Dimensions L in. (mm)
1/8	-QC4-FRT2-S	0.3	5/8	2.01 (51.1)
1/4	-QC4-FRT4-S	0.3	3/4	2.26 (57.4)
1/4	-QC6-FRT4-S	0.8	3/4	2.35 (59.7)
3/8	-QC6-FRT6-S	0.8	7/8	2.35 (59.7)
1/2	-QC8-FRT8-S	2.0	1 1/16	2.82 (71.6)

Male JIC(AN) 37° Flare

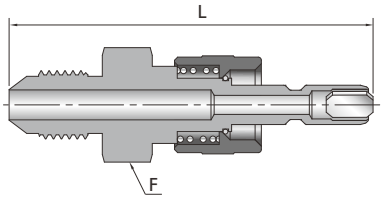

Fitting Size in.	Basic Ordering Number	Flow Coefficient (Cv)	Dimensions F in.	Dimensions L in. (mm)
1/4	-QC4-AN4-S	0.2	5/8	2.23 (56.6)
3/8	-QC6-AN6-S	1.0	3/4	2.35 (59.7)
1/2	-QC8-AN8-S	2.4	15/16	2.79 (70.9)

Hose Connector

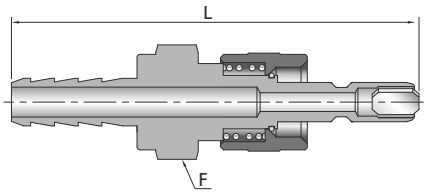

Hose Size in.	Basic Ordering Number	Flow Coefficient (Cv)	Dimensions F in.	Dimensions L in. (mm)
1/4	-QC4-HC4-S	0.2	5/8	2.47 (62.7)
3/8	-QC6-HC6-S	1.0	3/4	2.66 (67.6)
1/2	-QC8-HC8-S	2.4	15/16	3.07 (78.0)

Bulkhead Tube Fitting

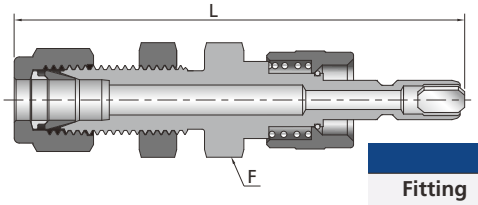

Fitting Size in.	Basic Ordering Number	Flow Coefficient (Cv)	Dimensions F in.	Dimensions L in. (mm)	Min. Panel Orifice in. (mm)	Max. Panel Thickness in. (mm)
1/4	-QC4-BFL4-S	0.3	5/8	2.74 (69.6)	0.47 (11.9)	0.25 (6.4)
3/8	-QC6-BFL6-S	1.0	3/4	2.92 (74.2)	0.60 (15.2)	0.27 (6.9)
1/2	-QC8-BFL8-S	2.4	15/16	3.43 (87.1)	0.78 (19.8)	0.26 (6.6)
mm	——	——	mm	mm (in.)	mm (in.)	mm (in.)
6	-QC4-BML6-S	0.3	16	69.6 (2.74)	11.7 (0.46)	6.4 (0.25)
10	-QC6-BML10-S	1.0	22	77.7 (3.06)	16.8 (0.66)	6.9 (0.27)
12	-QC8-BML12-S	2.4	24	87.1 (3.43)	19.6 (0.77)	6.6 (0.26)

DESO Stems

Tube Fitting

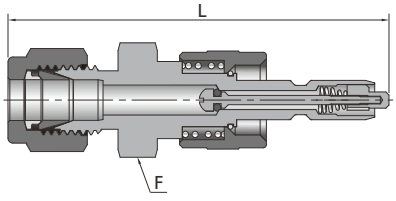

Fitting Size in.	Basic Ordering Number	Flow Coefficient (Cv)	Dimensions F in.	Dimensions L in. (mm)
1/8	-QC4-FL2-D	0.08	5/8	2.77 (70.4)
1/4	-QC4-FL4-D	0.2	5/8	2.42 (61.5)
3/8	-QC6-FL6-D	0.5	3/4	2.64 (67.1)
1/2	-QC8-FL8-D	1.5	15/16	3.16 (80.3)
mm	——	——	mm	mm (in.)
6	-QC4-ML6-D	0.2	16	61.5 (2.42)
10	-QC6-ML10-D	0.5	19	70.4 (2.77)
12	-QC8-ML12-D	1.5	24	80.3 (3.16)

Male NPT

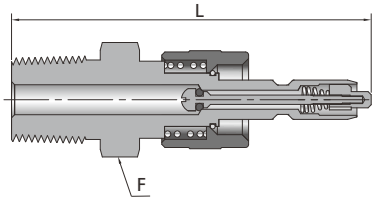

NPT Size in.	Basic Ordering Number	Flow Coefficient (Cv)	Dimensions F in.	Dimensions L in. (mm)
1/8	-QC4-NS2-D	0.2	5/8	2.13 (54.1)
1/4	-QC4-NS4-D	0.2	5/8	2.28 (57.8)
1/4	-QC6-NS4-D	0.5	3/4	2.44 (61.9)
3/8	-QC6-NS6-D	0.5	3/4	2.47 (62.7)
1/2	-QC8-NS8-D	1.3	15/16	3.04 (77.2)

Female NPT

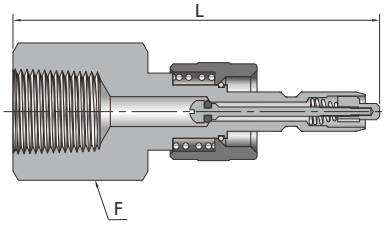

NPT Size in.	Basic Ordering Number	Flow Coefficient (Cv)	Dimensions F in.	Dimensions L in. (mm)
1/8	-QC4-FNS2-D	0.2	5/8	2.07 (52.6)
1/4	-QC4-FNS4-D	0.2	3/4	2.32 (58.9)
1/4	-QC6-FNS4-D	0.5	3/4	2.47 (62.7)
3/8	-QC6-FNS6-D	0.5	7/8	2.47 (62.7)
1/2	-QC8-FNS8-D	1.3	1 1/16	3.04 (77.2)

Male BSPT

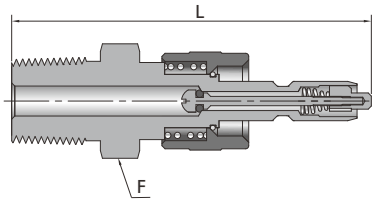

BSPT Size in.	Basic Ordering Number	Flow Coefficient (Cv)	Dimensions	
			F	L
			in.	in. (mm)
1/8	-QC4-RT2-D	0.2	5/8	2.13 (54.1)
1/4	-QC4-RT4-D	0.2	5/8	2.28 (57.8)
1/4	-QC6-RT4-D	0.5	3/4	2.44 (61.9)
3/8	-QC6-RT6-D	0.5	3/4	2.47 (62.7)
1/2	-QC8-RT8-D	1.3	15/16	3.04 (77.2)

Female BSPT

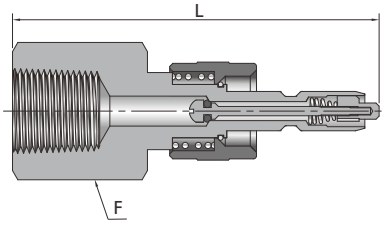

BSPT Size in.	Basic Ordering Number	Flow Coefficient (Cv)	Dimensions	
			F	L
			in.	in. (mm)
1/8	-QC4-FRT2-D	0.2	5/8	2.07 (52.6)
1/4	-QC4-FRT4-D	0.2	3/4	2.32 (58.9)
1/4	-QC6-FRT4-D	0.5	3/4	2.47 (62.7)
3/8	-QC6-FRT6-D	0.5	7/8	2.47 (62.7)
1/2	-QC8-FRT8-D	1.3	1 1/16	3.04 (77.2)

Male JIC(AN) 37° Flare

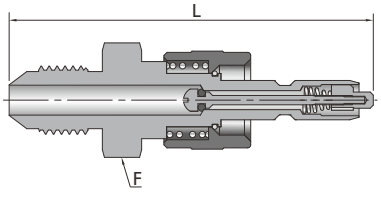

Fitting Size in.	Basic Ordering Number	Flow Coefficient (Cv)	Dimensions	
			F	L
			in.	in. (mm)
1/4	-QC4-AN4-D	0.2	5/8	2.29 (58.2)
3/8	-QC6-AN6-D	0.5	3/4	2.47 (62.7)
1/2	-QC8-AN8-D	1.5	15/16	2.99 (75.9)

Hose Connector

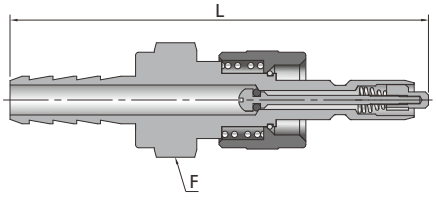

Hose Size in.	Basic Ordering Number	Flow Coefficient (Cv)	Dimensions	
			F	L
			in.	in. (mm)
1/4	-QC4-HC4-D	0.2	5/8	2.53 (64.3)
3/8	-QC6-HC6-D	0.5	3/4	2.78 (70.6)
1/2	-QC8-HC8-D	1.5	15/16	3.27 (83.1)

Bulkhead Tube Fitting

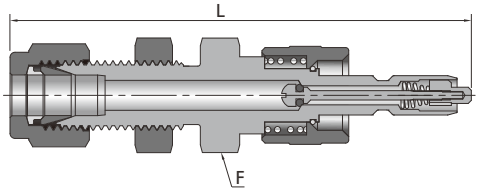

Fitting Size in.	Basic Ordering Number	Flow Coefficient (Cv)	Dimensions		Min. Panel Orifice	Max. Panel Thickness
			F	L		
			in.	in. (mm)	in. (mm)	in. (mm)
1/4	-QC4-BFL4-D	0.2	5/8	2.80 (71.1)	0.47 (11.9)	0.25 (6.4)
3/8	-QC6-BFL6-D	0.5	3/4	3.07 (78.0)	0.60 (15.2)	0.27 (6.9)
1/2	-QC8-BFL8-D	1.5	15/16	3.63 (92.2)	0.78 (19.8)	0.26 (6.6)
mm	——	——	mm	mm (in.)	mm (in.)	mm (in.)
6	-QC4-BML6-D	0.2	16	71.1 (2.80)	11.7 (0.46)	6.4 (0.25)
10	-QC6-BML10-D	0.5	22	78.7 (3.10)	16.8 (0.66)	6.9 (0.27)
12	-QC8-BML12-D	1.5	24	92.2 (3.63)	19.6 (0.77)	6.6 (0.26)

Bodies

Tube Fitting

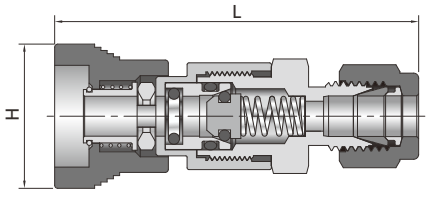

Fitting Size in.	Basic Ordering Number	Dimensions	
		H	L
		in.(mm)	in. (mm)
1/8	-QC4-FL2-B	0.91 (23.1)	2.26 (57.4)
1/4	-QC4-FL4-B	0.91 (23.1)	2.30 (58.4)
3/8	-QC6-FL6-B	1.02 (26.0)	2.58 (65.5)
1/2	-QC8-FL8-B	1.21 (30.7)	3.09 (78.5)
mm	——	mm (in.)	mm (in.)
6	-QC4-ML6-B	23.1 (0.91)	58.4 (2.30)
10	-QC6-ML10-B	26.0 (1.02)	68.1 (2.68)
12	-QC8-ML12-B	30.7 (1.21)	78.5 (3.09)

Male NPT

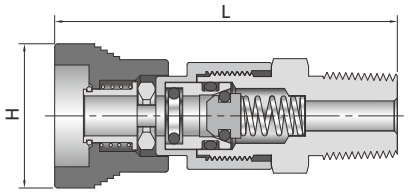

NPT Size in.	Basic Ordering Number	Dimensions	
		H	L
		in.(mm)	in. (mm)
1/8	-QC4-NS2-B	0.91 (23.1)	2.01 (51.1)
1/4	-QC4-NS4-B	0.91 (23.1)	2.16 (54.9)
1/4	-QC6-NS4-B	1.02 (26.0)	2.38 (60.5)
3/8	-QC6-NS6-B	1.02 (26.0)	2.38 (60.5)
1/2	-QC8-NS8-B	1.21 (30.7)	2.97 (75.4)

Female NPT

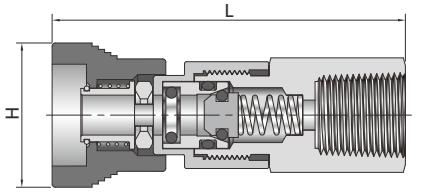

NPT Size in.	Basic Ordering Number	Dimensions	
		H	L
		in. (mm)	in. (mm)
1/8	-QC4-FNS2-B	0.91 (23.1)	2.16 (54.9)
1/4	-QC4-FNS4-B	0.91 (23.1)	2.42 (61.5)
1/4	-QC6-FNS4-B	1.02 (26.0)	2.54 (64.5)
3/8	-QC6-FNS6-B	1.02 (26.0)	2.57 (65.3)
1/2	-QC8-FNS8-B	1.21 (30.7)	3.22 (81.8)

Male BSPT

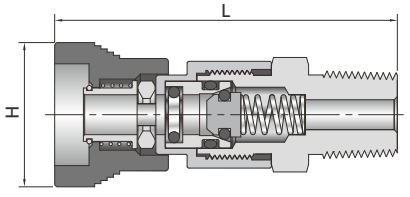

BSPT Size in.	Basic Ordering Number	Dimensions	
		H	L
		in. (mm)	in. (mm)
1/8	-QC4-RT2-B	0.91 (23.1)	2.01 (51.1)
1/4	-QC4-RT4-B	0.91 (23.1)	2.16 (54.9)
1/4	-QC6-RT4-B	1.02 (26.0)	2.38 (60.5)
3/8	-QC6-RT6-B	1.02 (26.0)	2.38 (60.5)
1/2	-QC8-RT8-B	1.21 (30.7)	2.97 (75.4)

Female BSPT

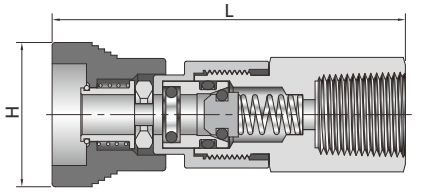

BSPT Size in.	Basic Ordering Number	Dimensions	
		H	L
		in. (mm)	in. (mm)
1/8	-QC4-FRT2-B	0.91 (23.1)	2.16 (54.9)
1/4	-QC4-FRT4-B	0.91 (23.1)	2.42 (61.5)
1/4	-QC6-FRT4-B	1.02 (26.0)	2.54 (64.5)
3/8	-QC6-FRT6-B	1.02 (26.0)	2.57 (65.3)
1/2	-QC8-FRT8-B	1.21 (30.7)	3.22 (81.8)

Male JIC (AN) 37° Flare

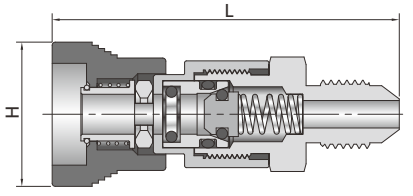

Fitting Size in.	Basic Ordering Number	Dimensions	
		H	L
		in. (mm)	in. (mm)
1/4	-QC4-AN4-B	0.91 (23.1)	2.17 (55.1)
3/8	-QC6-AN6-B	1.02 (26.0)	2.41 (61.2)
1/2	-QC8-AN8-B	1.21 (30.7)	2.92 (74.2)

Hose Connector

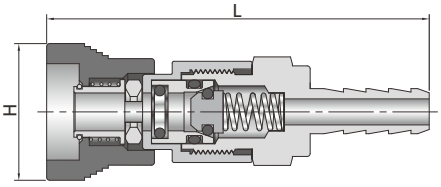

Hose Size in.	Basic Ordering Number	Dimensions H in. (mm)	Dimensions L in. (mm)
1/4	-QC4-HC4-B	0.91 (23.1)	2.41 (61.2)
3/8	-QC6-HC6-B	1.02 (26.0)	2.72 (69.1)
1/2	-QC8-HC8-B	1.21 (30.7)	3.20 (81.3)

Bulkhead Tube Fitting

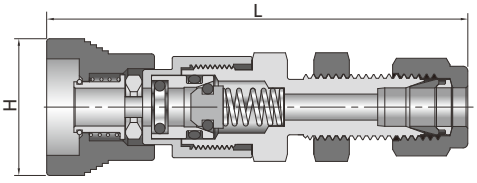

Fitting Size in.	Basic Ordering Number	Dimensions H	Dimensions L	Min. Panel Orifice	Max. Panel Thickness
		in. (mm)	in. (mm)	in. (mm)	in. (mm)
1/4	-QC4-BFL4-B	0.91 (23.1)	2.67 (67.8)	0.47 (11.9)	0.25 (6.4)
3/8	-QC6-BFL6-B	1.02 (26.0)	2.98 (75.7)	0.60 (15.2)	0.27 (6.9)
1/2	-QC8-BFL8-B	1.21 (30.7)	3.56 (90.4)	0.78 (19.8)	0.26 (6.6)
mm	——	mm (in.)	mm (in.)	mm (in.)	mm (in.)
6	-QC4-BML6-B	23.1 (0.91)	67.8 (2.67)	11.7 (0.46)	6.4 (0.25)
10	-QC6-BML10-B	26.0 (1.02)	75.9 (2.99)	16.8 (0.66)	6.9 (0.27)
12	-QC8-BML12-B	30.7 (1.21)	90.4 (3.56)	19.6 (0.77)	6.6 (0.26)

Full-Flow Bodies

Tube Fitting

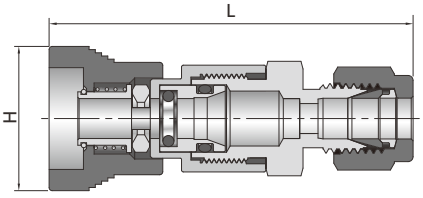

Fitting Size in.	Basic Ordering Number	Dimensions H	Dimensions L
		in. (mm)	in. (mm)
1/8	-QC4-FL2-F	0.91 (23.1)	2.26 (57.4)
1/4	-QC4-FL4-F	0.91 (23.1)	2.30 (58.4)
3/8	-QC6-FL6-F	1.02 (26.0)	2.58 (65.5)
1/2	-QC8-FL8-F	1.21 (30.7)	3.09 (78.5)
mm	——	mm (in.)	mm (in.)
6	-QC4-ML6-F	23.1 (0.91)	58.4 (2.30)
10	-QC6-ML10-F	26.0 (1.02)	68.1 (2.68)
12	-QC8-ML12-F	30.7 (1.21)	78.5 (3.09)

Male NPT

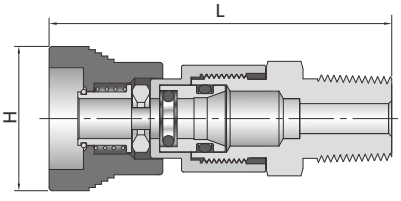

NPT Size in.	Basic Ordering Number	Dimensions H	Dimensions L
		in. (mm)	in. (mm)
1/8	-QC4-NS2-F	0.91 (23.1)	2.01 (51.1)
1/4	-QC4-NS4-F	0.91 (23.1)	2.16 (54.9)
1/4	-QC6-NS4-F	1.02 (26.0)	2.38 (60.5)
3/8	-QC6-NS6-F	1.02 (26.0)	2.38 (60.5)
1/2	-QC8-NS8-F	1.21 (30.7)	2.97 (75.4)

Female NPT

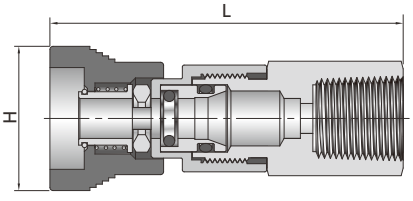

NPT Size in.	Basic Ordering Number	Dimensions H	Dimensions L
		in. (mm)	in. (mm)
1/8	-QC4-FNS2-F	0.91 (23.1)	2.16 (54.9)
1/4	-QC4-FNS4-F	0.91 (23.1)	2.42 (61.5)
1/4	-QC6-FNS4-F	1.02 (26.0)	2.54 (65.4)
3/8	-QC6-FNS6-F	1.02 (26.0)	2.57 (65.3)
1/2	-QC8-FNS8-F	1.21 (30.7)	3.22 (81.8)

Male BSPT

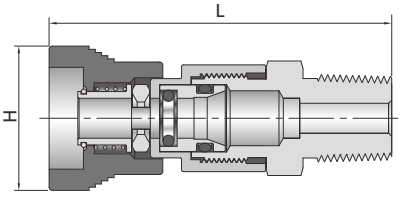

BSPT Size in.	Basic Ordering Number	Dimensions H	Dimensions L
		in. (mm)	in. (mm)
1/8	-QC4-RT2-F	0.91 (23.1)	2.01 (51.1)
1/4	-QC4-RT4-F	0.91 (23.1)	2.16 (54.9)
1/4	-QC6-RT4-F	1.02 (26.0)	2.38 (60.5)
3/8	-QC6-RT6-F	1.02 (26.0)	2.38 (60.5)
1/2	-QC8-RT8-F	1.21 (30.7)	2.97 (75.4)

Female BSPT

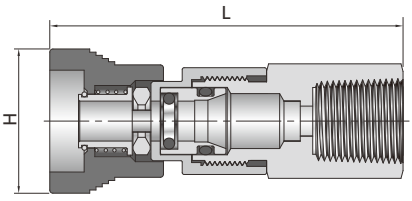

BSPT Size in.	Basic Ordering Number	Dimensions H in. (mm)	Dimensions L in. (mm)
1/8	-QC4-FRT2-F	0.91 (23.1)	2.16 (54.9)
1/4	-QC4-FRT4-F	0.91 (23.1)	2.42 (61.5)
1/4	-QC6-FRT4-F	1.02 (26.0)	2.54 (64.5)
3/8	-QC6-FRT6-F	1.02 (26.0)	2.57 (65.3)
1/2	-QC8-FRT8-F	1.21 (30.7)	3.22 (81.8)

Male JIC (AN) 37° Flare

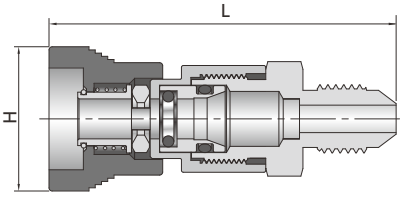

Fitting Size in.	Basic Ordering Number	Dimensions H in. (mm)	Dimensions L in. (mm)
1/4	-QC4-AN4-F	0.91 (23.1)	2.17 (55.1)
3/8	-QC6-AN6-F	1.02 (26.0)	2.41 (61.2)
1/2	-QC8-AN8-F	1.21 (30.7)	2.92 (74.2)

Hose Connector

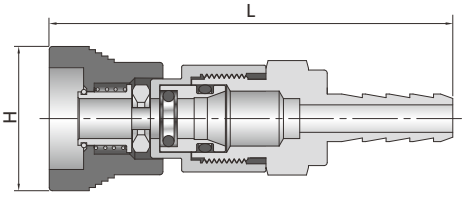

Hose Size in.	Basic Ordering Number	Dimensions H in. (mm)	Dimensions L in. (mm)
1/4	-QC4-HC4-F	0.91 (23.1)	2.41 (61.2)
3/8	-QC6-HC6-F	1.02 (26.0)	2.72 (69.1)
1/2	-QC8-HC8-F	1.21 (30.7)	3.20 (81.3)

Bulkhead Tube Fitting

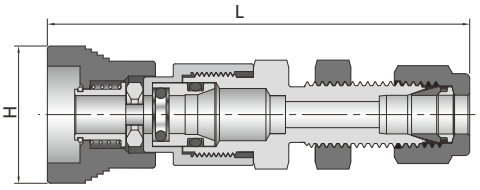

Fitting Size in.	Basic Ordering Number	Dimensions H in. (mm)	Dimensions L in. (mm)	Min. Panel Orifice in. (mm)	Max. Panel Thickness in. (mm)
1/4	-QC4-BFL4-F	0.91 (23.1)	2.67 (67.8)	0.47 (11.9)	0.25 (6.4)
3/8	-QC6-BFL6-F	1.02 (26.0)	2.98 (75.7)	0.60 (15.2)	0.27 (6.9)
1/2	-QC8-BFL8-F	1.21 (30.7)	3.56 (90.4)	0.78 (19.8)	0.26 (6.6)
mm	——	mm (in.)	mm (in.)	mm (in.)	mm (in.)
6	-QC4-BML6-F	23.1 (0.91)	67.8 (2.67)	11.7 (0.46)	6.4 (0.25)
10	-QC6-BML10-F	26.0 (1.02)	75.9 (2.99)	16.8 (0.66)	6.9 (0.27)
12	-QC8-BML12-F	30.7 (1.21)	90.4 (3.56)	19.6 (0.77)	6.6 (0.26)

Options, QC Series

Keyed QC Series

FITOK keyed quick-connects provide a reliable mechanical lockout system to prevent accidental intermixing of different lines in multifluid or multipressure systems.

QC Series Key Numbers and Sleeve Outside Diameters

Key Number	Color	QC4 Body Sleeve in. (mm)	QC4 Stem Sleeve in. (mm)	QC6 Body Sleeve in. (mm)	QC6 Stem Sleeve in. (mm)	QC8 Body Sleeve in. (mm)	QC8 Stem Sleeve in. (mm)
K1	Black	0.96 (24.4)	0.82 (20.8)	1.13 (28.7)	0.99 (25.1)	1.26 (32.0)	1.10 (27.9)
K2	Orange	0.99 (25.1)	0.85 (21.6)	1.16 (29.5)	1.02 (25.9)	1.29 (32.8)	1.14 (29.0)
K3	Green	1.02 (25.9)	0.88 (22.4)	1.19 (30.2)	1.05 (26.7)	1.32 (33.5)	1.17 (29.7)
K4	Yellow	1.05 (26.7)	0.91 (23.1)	1.22 (31.0)	1.08 (27.4)	1.35 (34.3)	1.20 (30.5)
K5	Blue	1.08 (27.4)	0.94 (23.9)	1.24 (31.5)	1.11 (28.2)	1.38 (35.1)	1.23 (31.2)
K6	White	1.11 (28.2)	0.97 (24.6)	1.28 (32.5)	1.14 (29.0)	1.41 (35.8)	1.26 (32.0)
K7	Purple	1.14 (29.0)	1.00 (25.4)	1.31 (33.3)	1.17 (29.7)	1.44 (36.6)	1.29 (32.8)
K8	Brown	1.17 (29.7)	1.03 (26.2)	1.34 (34.0)	1.20 (30.5)	1.47 (37.3)	1.32 (33.5)

Stem and Body Protector

Stem and body protector can prevent the stem and the body from being damaged and polluted when uncoupling.

Stem Protector



Series	Basic Ordering Number
QC4	-QC4-SP
QC6	-QC6-SP
QC8	-QC8-SP

Body Protector



Series	Basic Ordering Number
QC4	-QC4-BP
QC6	-QC6-BP
QC8	-QC8-BP

◎ Ordering number description of the protector: material designator (SS for stainless steel or B for brass) + basic ordering number.
Example: **SS-QC4-BP**

◎ Ordering number description of the keyed protector: material designator (SS for stainless steel or B for brass) + basic ordering number+key number.
Example: **SS-QC4-BP-K2**

◎ The protector is not a pressure sustaining device. To order pressure sustaining device, please contact FITOK Group or our authorized distributors.

Ordering Number Description

SS - QC4 - FNS4 - D - K1 - B - CE

Material	
SS	316 SS
B	Brass

Series	
QC4	1/4" (6.4 mm)
QC6	3/8" (9.5 mm)
QC8	1/2" (12.7 mm)

End Connection Type	
FNS	Female NPT
NS	Male NPT
FRT	Female BSPT
RT	Male BSPT
FMS	Female Metric Thread (for RG-M)
MS	Male Metric Thread (for RG-M)
FL	Fractional Tube Fitting
ML	Metric Tube Fitting
FT	Fractional Tube Adapter
MT	Metric Tube Adapter
AN	Male JIC 37° Flare
BFL	Fractional Bulkhead Tube Fitting
BML	Metric Bulkhead Tube Fitting

End Connection Size	
4	1/4"
6	3/8" or 6 mm
8	1/2" or 8 mm
10	5/8" or 10 mm
12	3/4" or 12 mm
14	M14 x 1.5
16	1" or 16 mm
18	M18 x 1.5
20	M20 x 1.5

Stem or Body	
S	Stem without valve remains open when uncoupled
D	Stem with valve shuts off when uncoupled
B	Body with valve shuts off when uncoupled
F	Full-flow body

Key Number and Color	
	Without key
K1	Black
K2	Orange
K3	Green
K4	Yellow
K5	Blue
K6	White
K7	Purple
K8	Brown

O-ring Material	
	Fluorocarbon FKM
B	Buna N
E	EPDM
N	Neoprene
Z	FFKM

Special Application	
	No
CE	NACE MR0175
SI	SilcoNert® 2000 (Sulfinert®) Coating

Notes:
1. "Ordering Number Description" is a reference to understand the combination rules of FITOK product part number. Not all combinations are available.
2. Dimensions are for reference only and are subject to change.
3. Special Application
   Wetted metal components SilcoNert® 2000 (Sulfinert®) coated.

Full Flow Quick-Connects

QF Series

Features

- Working pressure up to: 6000 psig (414 bar)
- Materials: stainless steel or brass
- Full flow
- Quick, easy operation
- Smooth and open bores without valve on either end to minimize pressure drop and allow easy cleaning

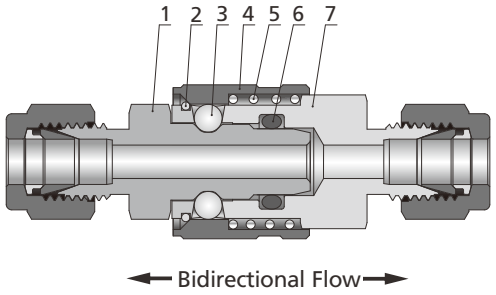

Standard Materials of Construction

Item	Component	Stainless Steel	Brass
		Material Grade/ASTM Specification	
1	Stem	316 SS/A479	Brass C36000/B16
2	Snap rings	316 SS/A313	
3	Locking balls	440C/A276	
4	Sliding sleeve	316L SS/A479	C36000/B16
5	Springs	316 SS/A313	
6	O-rings	Fluorocarbon FKM	Buna N
7	Body	316 SS/A479	Brass C36000/B16
8	Lubricants	Silicone-based	

Insertion Depth

Series	Insertion Depth in. (mm)
QF4	0.78 (19.8)
QF8	0.81 (20.6)
QF12	0.90 (22.9)
QF16	0.94 (23.9)

In order to measure overall length in the coupled position, insertion depth should be deducted from any overall stem and body combination length.

Pressure-Temperature Ratings

1. Pressure ratings may be limited by end connections.
2. Quick-Connects in compliance with NACE MR0175 are subject to a lower pressure rating. For more information, please contact FITOK Group or our authorized distributors.
3. Do not uncouple under pressure.

QF4 Series and QF8 Series

Material	316 SS			Brass	
O-Ring Material	Fluorocarbon FKM	Ethylene propylene	Perfluorocarbon FFKM	Buna N	
Series	QF4 and QF8			QF4	QF8
Temperature °F (°C)	Pressure Rating, psig (bar)				
	Coupled				
-50 (-45)	—	6000 (413)	—	—	—
0 (-17)	6000 (413)	6000 (413)	6000 (413)	4000 (275)	3000 (206)
10 (-12)	6000 (413)	6000 (413)	6000 (413)	4000 (275)	3000 (206)
40 (4)	6000 (413)	6000 (413)	6000 (413)	4000 (275)	3000 (206)
100 (37)	6000 (413)	6000 (413)	6000 (413)	4000 (275)	3000 (206)
150 (65)	5000 (344)	4000 (275)	5000 (344)	2700 (186)	2000 (137)
200 (93)	4000 (275)	2700 (186)	4000 (275)	1400 (96.4)	1000 (68.9)
250 (121)	3000 (206)	1400 (96.4)	3000 (206)	300 (20.6)	300 (20.6)
300 (148)	2000 (137)	400 (27.5)	2000 (137)	—	—
350 (176)	1200 (82.6)	—	1200 (82.6)	—	—
400 (204)	400 (27.5)	—	400 (27.5)	—	—
500 (260)	—	—	200 (13.7)	—	—

QF12 Series and QF16 Series

Material	316 SS			Brass
O-Ring Material	Fluorocarbon FKM	Ethylene propylene	Perfluorocarbon FFKM	Buna N
Temperature °F (°C)	Pressure Rating, psig (bar)			
Coupled				
-50 (-45)	—	4000 (275)	—	—
0 (-17)	4000 (275)	4000 (275)	4000 (275)	2000 (137)
10 (-12)	4000 (275)	4000 (275)	4000 (275)	2000 (137)
40 (4)	4000 (275)	4000 (275)	4000 (275)	2000 (137)
100 (37)	4000 (275)	4000 (275)	4000 (275)	2000 (137)
150 (65)	3500 (241)	2000 (137)	3500 (241)	1300 (89.5)
200 (93)	2800 (192)	1300 (89.5)	2800 (192)	700 (48.2)
250 (121)	2100 (144)	700 (48.2)	2100 (144)	200 (13.7)
300 (148)	1400 (96.4)	200 (13.7)	1400 (96.4)	—
350 (176)	800 (55.1)	—	800 (55.1)	—
400 (204)	200 (13.7)	—	200 (13.7)	—
500 (260)	—	—	150 (10.3)	—

Dimensions

Stems

Tube Fitting

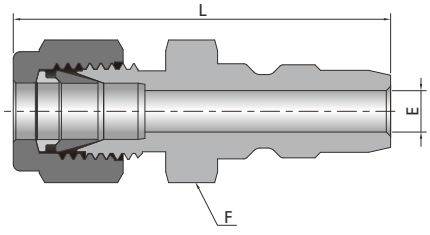

Fitting Size in.	Basic Ordering Number	Flow Coefficient (Cv)	Dimensions E in. (mm)	F in.	L in. (mm)
1/4	-QF4-FL4-S	2.2	0.19 (4.8)	9/16	1.77 (45.0)
3/8	-QF4-FL6-S	2.8	0.24 (6.1)	11/16	1.77 (45.0)
3/8	-QF8-FL6-S	2.8	0.28 (7.1)	7/8	1.88 (47.8)
1/2	-QF8-FL8-S	13.0	0.41 (10.4)	7/8	1.99 (50.5)
3/4	-QF12-FL12-S	26.0	0.62 (15.7)	1 1/16	2.15 (54.6)
1	-QF16-FL16-S	45.0	0.88 (22.4)	1 3/8	2.45 (62.2)
mm	——	——	(mm) in.	mm	(mm) in.
6	-QF4-ML6-S	2.2	4.8 (0.19)	15	45.0 (1.77)
10	-QF8-ML10-S	2.8	7.1 (0.28)	22	48.5 (1.91)
12	-QF8-ML12-S	13.0	9.5 (0.37)	22	51.3 (2.02)
20	-QF12-ML20-S	26.0	15.7 (0.62)	30	54.6 (2.15)
25	-QF16-ML25-S	45.0	22.4 (0.88)	36	63.5 (2.50)

Male NPT

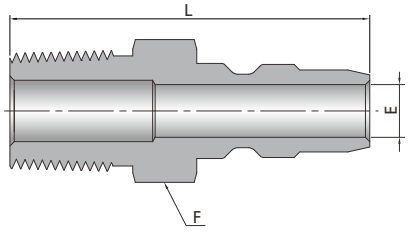

NPT Size in.	Basic Ordering Number	Flow Coefficient (Cv)	Dimensions E in. (mm)	F in.	L in. (mm)
1/4	-QF4-NS4-S	1.7	0.24 (6.1)	9/16	1.59 (40.4)
3/8	-QF4-NS6-S	1.7	0.24 (6.1)	11/16	1.59 (40.4)
3/8	-QF8-NS6-S	7.1	0.41 (10.4)	7/8	1.65 (41.9)
1/2	-QF8-NS8-S	11.5	0.50 (12.7)	7/8	1.84 (46.7)
3/4	-QF12-NS12-S	23.6	0.72 (18.3)	1 1/16	2.03 (51.6)
1	-QF16-NS16-S	39.0	0.88 (22.4)	1 3/8	2.35 (59.7)

Stems

Female NPT

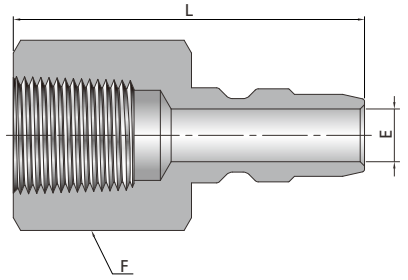

NPT Size in.	Basic Ordering Number	Flow Coefficient (Cv)	Dimensions		
			E	F	L
			in. (mm)	in.	in. (mm)
1/4	-QF4-FNS4-S	1.7	0.24 (6.1)	3/4	1.60 (40.6)
3/8	-QF4-FNS6-S	1.7	0.24 (6.1)	7/8	1.67 (42.4)
3/8	-QF8-FNS6-S	7.1	0.41 (10.4)	1 1/16	1.59 (40.4)
1/2	-QF8-FNS8-S	11.5	0.50 (12.7)	1 1/16	1.82 (46.2)
3/4	-QF12-FNS12-S	23.6	0.72 (18.3)	1 5/16	2.08 (52.8)
1	-QF16-FNS16-S	39.0	0.88 (22.4)	1 5/8	2.49 (63.2)

Male BSPT

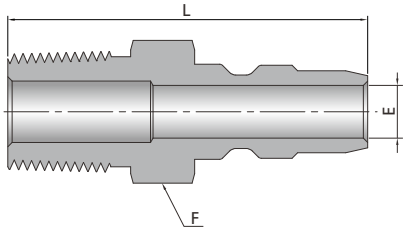

BSPT Size in.	Basic Ordering Number	Flow Coefficient (Cv)	Dimensions		
			E	F	L
			in. (mm)	in.	in. (mm)
1/4	-QF4-RT4-S	1.7	0.24 (6.1)	9/16	1.59 (40.4)
3/8	-QF4-RT6-S	1.7	0.24 (6.1)	11/16	1.59 (40.4)
3/8	-QF8-RT6-S	7.1	0.41 (10.4)	7/8	1.65 (41.9)
1/2	-QF8-RT8-S	11.5	0.50 (12.7)	7/8	1.84 (46.7)
3/4	-QF12-RT12-S	23.6	0.72 (18.3)	1 1/16	2.03 (51.6)
1	-QF16-RT16-S	39.0	0.88 (22.4)	1 3/8	2.35 (59.7)

Female BSPT

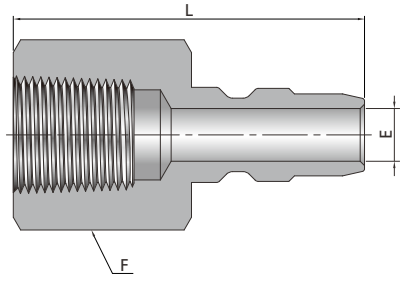

BSPT Size in.	Basic Ordering Number	Flow Coefficient (Cv)	Dimensions		
			E	F	L
			in. (mm)	in.	in. (mm)
1/4	-QF4-FRT4-S	1.7	0.24 (6.1)	3/4	1.60 (40.6)
3/8	-QF4-FRT6-S	1.7	0.24 (6.1)	7/8	1.67 (42.4)
3/8	-QF8-FRT6-S	7.1	0.41 (10.4)	1 1/16	1.59 (40.4)
1/2	-QF8-FRT8-S	11.5	0.50 (12.7)	1 1/16	1.82 (46.2)
3/4	-QF12-FRT12-S	23.6	0.72 (18.3)	1 5/16	2.08 (52.8)
1	-QF16-FRT16-S	39.0	0.88 (22.4)	1 5/8	2.49 (63.2)

Bodies

Tube Fitting

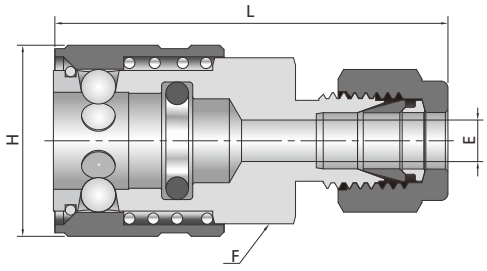

Fitting Size in.	Basic Ordering Number	Dimensions E in. (mm)	F in.	H in. (mm)	L in. (mm)
1/4	-QF4-FL4-B	0.19 (4.8)	11/16	0.87 (22.1)	1.80 (45.7)
3/8	-QF4-FL6-B	0.28 (7.1)	11/16	0.87 (22.1)	1.81 (46.0)
3/8	-QF8-FL6-B	0.28 (7.1)	1 1/16	1.30 (33.0)	2.17 (55.1)
1/2	-QF8-FL8-B	0.47 (11.9)	1 1/16	1.30 (33.0)	2.23 (56.6)
3/4	-QF12-FL12-B	0.62 (15.7)	1 1/2	1.66 (42.2)	2.45 (62.2)
1	-QF16-FL16-B	0.88 (22.4)	1 11/16	1.88 (47.8)	2.75 (69.9)
mm	———	(mm) in.	mm	(mm) in.	(mm) in.
6	-QF4-ML6-B	4.8 (0.19)	18	22.1 (0.87)	45.7 (1.80)
10	-QF8-ML10-B	7.1 (0.28)	27	33.0 (1.30)	55.9 (2.20)
12	-QF8-ML12-B	10.4 (0.41)	27	33.0 (1.30)	57.4 (2.26)
20	-QF12-ML20-B	15.9 (0.63)	38	42.2 (1.66)	63.5 (2.50)
25	-QF16-ML25-B	21.8 (0.86)	46	47.8 (1.88)	70.0 (2.76)

Male NPT

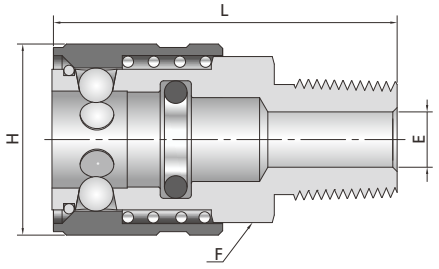

NPT Size in.	Basic Ordering Number	Dimensions E in. (mm)	F in.	H in. (mm)	L in. (mm)
1/4	-QF4-NS4-B	0.25 (6.4)	11/16	0.87 (22.1)	1.57 (39.9)
3/8	-QF4-NS6-B	0.37 (9.4)	11/16	0.87 (22.1)	1.57 (39.9)
3/8	-QF8-NS6-B	0.41 (10.4)	1 1/16	1.30 (33.0)	1.83 (46.5)
1/2	-QF8-NS8-B	0.50 (12.7)	1 1/16	1.30 (33.0)	2.08 (52.8)
3/4	-QF12-NS12-B	0.72 (18.3)	1 1/2	1.66 (42.2)	2.33 (59.2)
1	-QF16-NS16-B	0.88 (22.4)	1 11/16	1.88 (47.8)	2.65 (67.3)

Female NPT

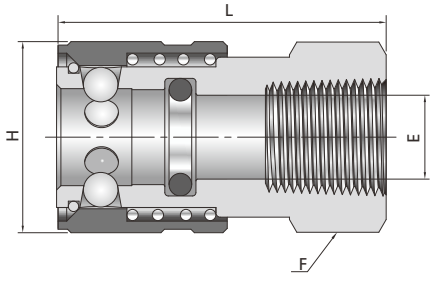

NPT Size in.	Basic Ordering Number	Dimensions E in. (mm)	F in.	H in. (mm)	L in. (mm)
1/4	-QF4-FNS4-B	0.38 (9.7)	3/4	0.87 (22.1)	1.50 (38.1)
3/8	-QF4-FNS6-B	0.38 (9.7)	7/8	0.87 (22.1)	1.63 (41.4)
3/8	-QF8-FNS6-B	0.59 (15.0)	1 1/16	1.30 (33.0)	1.73 (43.9)
1/2	-QF8-FNS8-B	0.63 (16.0)	1 1/16	1.30 (33.0)	1.73 (43.9)
3/4	-QF12-FNS12-B	0.88 (22.4)	1 1/2	1.66 (42.2)	1.89 (48.0)
1	-QF16-FNS16-B	1.06 (26.9)	1 11/16	1.88 (47.8)	2.12 (53.8)

Male BSPT

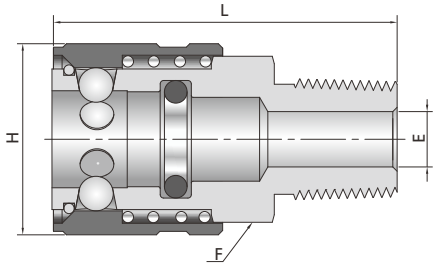

BSPT Size in.	Basic Ordering Number	Dimensions E in. (mm)	F in.	H in. (mm)	L in. (mm)
1/4	-QF4-RT4-B	0.25 (6.4)	11/16	0.87 (22.1)	1.57 (39.9)
3/8	-QF4-RT6-B	0.37 (9.4)	11/16	0.87 (22.1)	1.57 (39.9)
3/8	-QF8-RT6-B	0.41 (10.4)	1 1/16	1.30 (33.0)	1.83 (46.5)
1/2	-QF8-RT8-B	0.50 (12.7)	1 1/16	1.30 (33.0)	2.08 (52.8)
3/4	-QF12-RT12-B	0.72 (18.3)	1 1/2	1.66 (42.2)	2.33 (59.2)
1	-QF16-RT16-B	0.88 (22.4)	1 11/16	1.88 (47.8)	2.65 (67.3)

Female BSPT

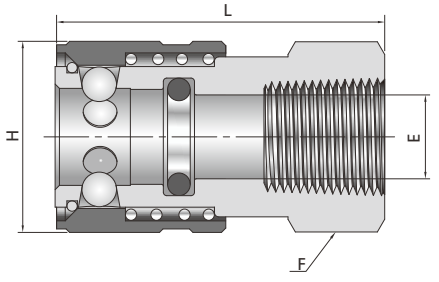

BSPT Size in.	Basic Ordering Number	Dimensions E in. (mm)	F in.	H in. (mm)	L in. (mm)
1/4	-QF4-FRT4-B	0.38 (9.7)	3/4	0.87 (22.1)	1.50 (38.1)
3/8	-QF4-FRT6-B	0.38 (9.7)	7/8	0.87 (22.1)	1.63 (41.4)
3/8	-QF8-FRT6-B	0.59 (15.0)	1 1/16	1.30 (33.0)	1.73 (43.9)
1/2	-QF8-FRT8-B	0.63 (16.0)	1 1/16	1.30 (33.0)	1.73 (43.9)
3/4	-QF12-FRT12-B	0.88 (22.4)	1 1/2	1.66 (42.2)	1.89 (48.0)
1	-QF16-FRT16-B	1.06 (26.9)	1 11/16	1.88 (47.8)	2.12 (53.8)

Options, QF Series

Stem and Body Protector

Stem and body protector can prevent the stem and the body from being damaged and polluted when uncoupling.

Stem Protector

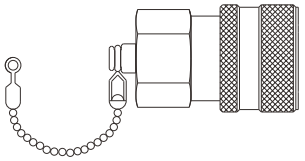

Series	Basic Ordering Number
QF4	-QF4-SP
QF8	-QF8-SP
QF12	-QF12-SP
QF16	-QF16-SP

Body Protector

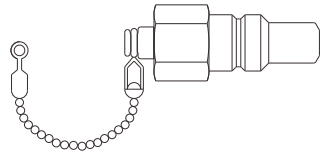

Series	Basic Ordering Number
QF4	-QF4-BP
QF8	-QF8-BP
QF12	-QF12-BP
QF16	-QF16-BP

◎ Ordering number description of the protector: material designator (SS for stainless steel or B for brass) + basic ordering number.
Example: **SS-QF4-BP**

◎ The protector is not a pressure sustaining device. To order pressure sustaining device, please contact FITOK Group or our authorized distributors.

Ordering Number Description

SS - QF4 - FNS4 - B - B - CE

Material	
SS	316SS
B	Brass

Series	
QF4	1/4" (6.4 mm)
QF8	1/2" (12.7 mm)
QF12	3/4" (19.0 mm)
QF16	1" (25.4 mm)

End Connection Type	
FNS	Female NPT
NS	Male NPT
FRT	Female BSPT
RT	Male BSPT
FMS	Female Metric Thread (for RG-M)
MS	Male Metric Thread (for RG-M)
FL	Fractional Tube Fitting
ML	Metric Tube Fitting
FT	Fractional Tube Adapter
MT	Metric Tube Adapter
AN	Male JIC 37° Flare

End Connection Size	
4	1/4"
6	3/8" or 6 mm
8	1/2" or 8 mm
10	5/8" or 10 mm
12	3/4" or 12 mm
14	M14 x 1.5
16	1" or 16 mm
18	M18 x 1.5
20	M20 x 1.5

Stem or Body	
S	Stem
B	Body

O-ring Material	
	Fluorocarbon FKM
B	Buna N
E	EPDM
N	Neoprene
Z	FFKM

Special Application	
	No
CE	NACE MR0175
SI	SilcoNert® 2000 (Sulfinert®) Coating

Notes: 1. "Ordering Number Description" is a reference to understand the combination rules of FITOK product part number. Not all combinations are available.
2. Dimensions are for reference only and are subject to change.
3. Special Application
Wetted metal components SilcoNert® 2000 (Sulfinert®) coated.

Double-End Shutoff, High Flow Quick-Connects

QV Series

Features

- Working pressure up to: 2000 psig (137 bar)
- Large flow area to ensure high flow capacity
- Positive valve stop to maintain valve alignment and to provide metal to metal valve stop to ensure that the valves are fully open
- Hardened nipples and sleeves as well as solid barstock construction to make for a quality coupling with maximum resistance to damage from hydraulic and mechanical shock
- Designed to withstand high pressure with reliable sealing
- Durable ball-locking mechanism to assure reliable connection

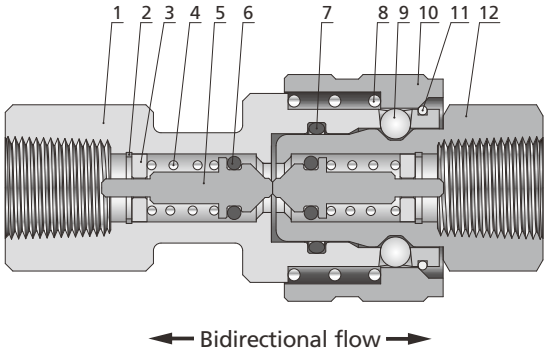

Standard Materials of Construction

Item	Component	Stainless Steel	Brass
		Material Grade/ASTM Specification	
1	Body	316 SS/A479	C36000/B16
2	Locating ring	304 SS	
3	Locating block	316 SS/A276	Brass C36000/B16
4	Springs	316 SS/A313	
5	Valve Stem	316 SS/A479	C36000/B16
6	O-rings	Fluorocarbon FKM	Buna N
7			
8	Springs	316 SS/A313	
9	Locking balls	440C/A276	
10	Body sleeve	316L SS/A479	Brass C36000/B16
11	Snap rings	316 SS/A313	
12	Stem	316 SS/A479	C36000/B16
13	Lubricants	Silicone-based	

Pressure-Temperature Ratings

Do not couple or uncouple under pressure.

Body Material	Stainless Steel						Brass					
Series	QV2	QV4	QV6	QV8	QV12	QV16	QV2	QV4	QV6	QV8	QV12	QV16
O-ring	FKM						Buna N					
Temperature Range	-10°F to 400°F (-23°C to 204°C)						-10°F to 250°F (-23°C to 121°C)					
Working Pressure psig (bar)	2000 (137)		1500 (103)			1000 (69.0)	1000 (69.0)					

Insertion Depth

Series	Insertion Depth in. (mm)
QV2	0.81 (20.5)
QV4	0.98 (25)
QV6	1.17 (29.7)
QV8	1.26 (32)
QV12	1.64 (41.6)
QV16	1.93 (49.1)

In order to measure overall length in the coupled position, the insertion depth should be deducted from any overall stem and body combination length.

Dimensions

Stems

Female NPT

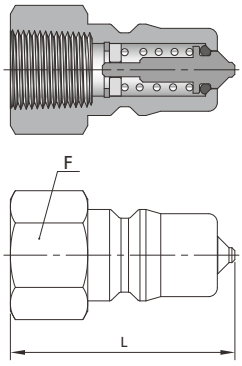

NPT Size in.	Basic Ordering Number	Flow Coefficient (Cv)	Dimensions L in. (mm)	Dimensions F in.
1/8	-QV2-FNS2-D	0.2	1.16 (29.5)	9/16
1/4	-QV4-FNS4-D	0.6	1.39 (35.3)	3/4
3/8	-QV6-FNS6-D	1.2	1.50 (38.1)	7/8
1/2	-QV8-FNS8-D	2.6	1.75 (44.5)	1 1/8
3/4	-QV12-FNS12-D	3.3	2.16 (54.9)	1 3/8
1	-QV16-FNS16-D	6.2	2.91 (73.9)	1 5/8

Female BSPT

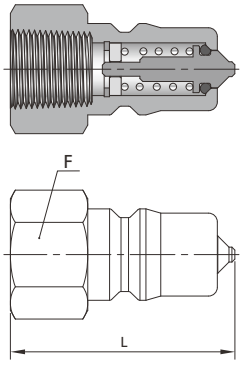

BSPT Size in.	Basic Ordering Number	Flow Coefficient (Cv)	Dimensions L in. (mm)	Dimensions F in.
1/8	-QV2-FRT2-D	0.2	1.16 (29.5)	9/16
1/4	-QV4-FRT4-D	0.6	1.39 (35.3)	3/4
3/8	-QV6-FRT6-D	1.2	1.50 (38.1)	7/8
1/2	-QV8-FRT8-D	2.6	1.75 (44.5)	1 1/8
3/4	-QV12-FRT12-D	3.3	2.16 (54.9)	1 3/8
1	-QV16-FRT16-D	6.2	2.91 (73.9)	1 5/8

Bodies

Female NPT

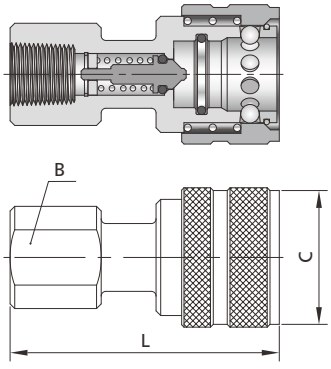

NPT Size in.	Basic Ordering Number	Dimensions L in. (mm)	Dimensions B in. (mm)	Dimensions C in. (mm)
1/8	-QV2-FNS2-B	1.90 (48.3)	0.63 (15.9)	0.96 (24.4)
1/4	-QV4-FNS4-B	2.26 (57.4)	0.81 (20.6)	1.14 (29.0)
3/8	-QV6-FNS6-B	2.49 (63.2)	0.88 (22.2)	1.40 (35.6)
1/2	-QV8-FNS8-B	2.87 (72.9)	1.13 (28.6)	1.77 (45.0)
3/4	-QV12-FNS12-B	3.56 (90.4)	1.31 (33.3)	2.14 (54.4)
1	-QV16-FNS16-B	4.18 (106.2)	1.63 (41.3)	2.52 (64.0)

Female BSPT

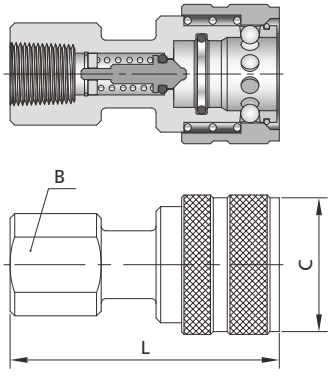

BSPT Size in.	Basic Ordering Number	Dimensions L in. (mm)	Dimensions B in. (mm)	Dimensions C in. (mm)
1/8	-QV2-FRT2-B	1.90 (48.3)	0.69 (17.5)	0.96 (24.4)
1/4	-QV4-FRT4-B	2.26 (57.4)	0.81 (20.6)	1.14 (29.0)
3/8	-QV6-FRT6-B	2.49 (63.2)	0.88 (22.2)	1.40 (35.6)
1/2	-QV8-FRT8-B	2.87 (72.9)	1.13 (28.6)	1.77 (45.0)
3/4	-QV12-FRT12-B	3.56 (90.4)	1.31 (33.3)	2.14 (54.4)
1	-QV16-FRT16-B	4.18 (106.2)	1.63 (41.3)	2.52 (64.0)

Options, QV Series

Stem and Body Protector

Stem and body protector can prevent the stem and the body from being damaged and polluted when uncoupling.

Stem Protector

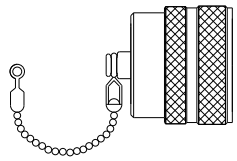

Series	Basic Ordering Number
QV2	-QV2-SP
QV4	-QV4-SP
QV6	-QV6-SP
QV8	-QV8-SP
QV12	-QV12-SP
QV16	-QV16-SP

Body Protector

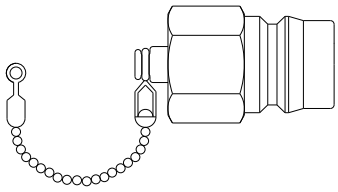

Series	Basic Ordering Number
QV2	-QV2-BP
QV4	-QV4-BP
QV6	-QV6-BP
QV8	-QV8-BP
QV12	-QV12-BP
QV16	-QV16-BP

◎ Ordering number description of the protector: material designator (SS for stainless steel or B for brass) + basic ordering number. Example: **SS-QV4-BP**

◎ The protector is not a pressure sustaining device. To order pressure sustaining device, please contact FITOK Group or our authorized distributors.

Ordering Number Description

SS - QV8 - FNS8 - D - B - CE

Material	
SS	316SS
B	Brass

Series	
QV2	1/8" (3.2 mm)
QV4	1/4" (6.4 mm)
QV8	1/2" (12.7 mm)
QV12	3/4" (19.0 mm)
QV16	1" (25.4 mm)

End Connection Type	
FNS	Female NPT
FRT	Female BSPT

End Connection Size	
2	1/8"
4	1/4"
6	3/8"
8	1/2"
12	3/4"
16	1"

Stem or Body	
D	Stem with valve shuts off when uncoupled
B	Body with valve shuts off when uncoupled

O-ring Material	
	Fluorocarbon FKM
B	Buna N
E	EPDM
N	Neoprene
Z	FFKM

Special Application	
	No
CE	NACE MR0175
SI	SilcoNert® 2000 (Sulfinert®) Coating

Notes: 1. "Ordering Number Description" is a reference to understand the combination rules of FITOK product part number. Not all combinations are available.
2. Dimensions are for reference only and are subject to change.
3. Special Application
Wetted metal components SilcoNert® 2000 (Sulfinert®) coated.

Miniature Quick-Connects

QM Series

Features

- Working pressure up to: 4000 psig (276 bar)
- Single-end shutoff, double-end shutoff and full-flow model available
- Quick and easy operation

Double-end Shutoff (DESO)

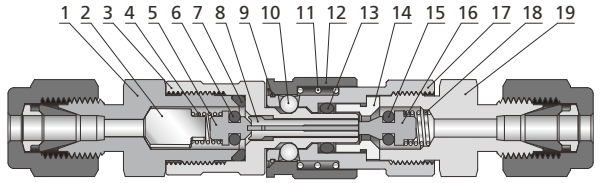

Single-end Shutoff (SESO)

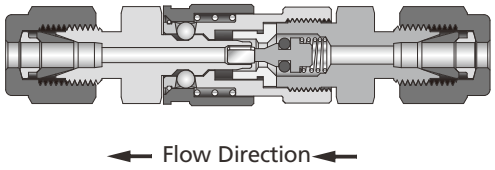

Full-flow Quick-Connects

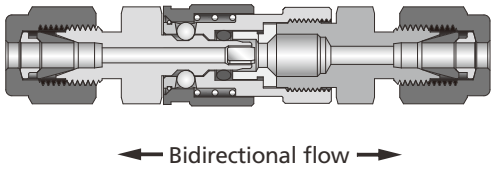

Standard Materials of Construction

Item.	Component	Stainless Steel	Brass
		Material Grade/ASTM Specification	
1	Stem body	316 SS/A479	Brass C36000/B16
2	Valve block	316 SS/A240	Brass C26000/B36
3	Stem	316 SS/A479	Brass C36000/B16
4	Springs	316 SS/A313	
5	Valve head	316 SS/A479	Brass C36000/B16
6	O-rings	Fluorocarbon FKM	Buna N
7			
8	Stem insert	316 SS/A240	Brass C26000/B36
9	Snap rings	316 SS/A313	
10	Steel ball	440C/A276	
11	Springs	316 SS/A313	
12	Body sleeve	316L SS/A479	Brass C36000/B16
13	O-rings	Fluorocarbon FKM	Buna N
14	Insert	316 SS/A479	Brass C36000/B16
15	O-rings	Fluorocarbon FKM	Buna N
16	Valve head	316 SS/A479	Brass C36000/B16
17	housing	316 SS/A479	Brass C36000/B16
18	Springs	316 SS/A313	
19	Body	316 SS/A479	Brass C36000/B16
20	Lubricants	Silicone-based	

Pressure -Temperature Ratings

Pressure rating restrictions apply when coupling and uncoupling (DESO only). Refer to the table below for specific data.

Material	316 SS			Brass
O-Ring Material	Fluorocarbon FKM	Ethylene propylene	Perfluorocarbon FFKM	Buna N
Temperature °F (°C)	Pressure Rating, psig (bar)			
Coupled				
-50 (-45)	—	4000 (275)	—	—
0 (-17)	4000 (275)	4000 (275)	4000 (275)	2000 (137)
10 (-12)	4000 (275)	4000 (275)	4000 (275)	2000 (137)
40 (4)	4000 (275)	4000 (275)	4000 (275)	2000 (137)
100 (37)	4000 (275)	4000 (275)	4000 (275)	2000 (137)
150 (65)	3500 (241)	3500 (241)	3500 (241)	1300 (89.5)
200 (93)	2800 (192)	2800 (192)	2800 (192)	700 (48)
250 (121)	2100 (144)	2100 (144)	2100 (144)	200 (13.7)
300 (148)	1400 (96.4)	1400 (96.4)	1400 (96.4)	—
350 (176)	800 (55.1)	—	800 (55.1)	—
400 (204)	200 (13.7)	—	200 (13.7)	—
500 (260)	—	—	150 (10.3)	—
Uncoupled and When Coupling and Uncoupling				
70 (20)	100 (6.8)			

Insertion Depth

In order to measure overall length in the coupled position, insertion depth should be deducted from any overall stem and body combination length.

Depth in. (mm)	
SESO	DESO
0.47 (11.9)	0.53 (13.5)

Spillage and Air Inclusion

$0.1cm^3$
(DESO only)

Dimensions

SESO Stems

Tube Fitting

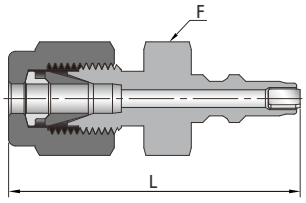

Fitting Size in.	Basic Ordering Number	Flow Coefficient (Cv)	Dimensions L in. (mm)	Dimensions F in.
1/16	QM-FL1-S	0.06	1.18 (30.0)	7/16
1/8	QM-FL2-S		1.29 (32.8)	

Male NPT

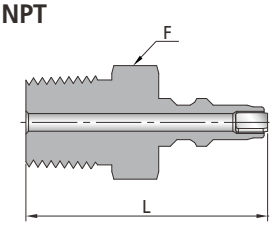

NPT Size in.	Basic Ordering Number	Flow Coefficient (Cv)	Dimensions L in. (mm)	Dimensions F in.
1/16	QM-NS1-S	0.06	1.03 (26.2)	7/16
1/8	QM-NS2-S			

Female NPT

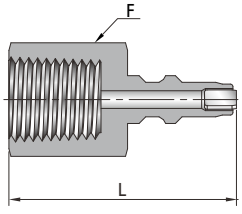

NPT Size in.	Basic Ordering Number	Flow Coefficient (Cv)	Dimensions L in. (mm)	Dimensions F in.
1/16	QM-FNS1-S	0.06	1.03 (26.2)	7/16
1/8	QM-FNS2-S		1.18 (30.0)	9/16

DESO Stems

Tube Fitting

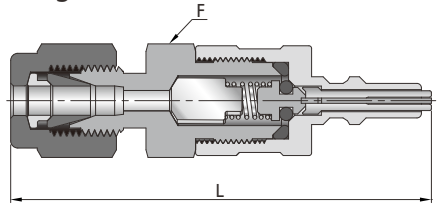

Fitting Size in.	Basic Ordering Number	Flow Coefficient (Cv)	Dimensions L in. (mm)	Dimensions F in.
1/16	QM-FL1-D	0.05	1.76 (44.7)	7/16
1/8	QM-FL2-D		1.87 (47.5)	

Male NPT

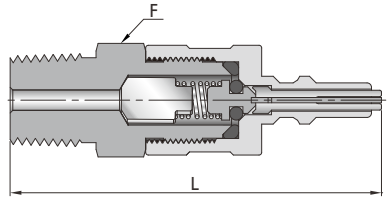

NPT Size in.	Basic Ordering Number	Flow Coefficient (Cv)	Dimensions L in. (mm)	Dimensions F in.
1/16	QM-NS1-D	0.05	1.61 (40.9)	7/16
1/8	QM-NS2-D			

Female NPT

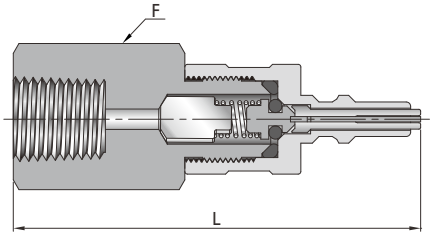

NPT Size in.	Basic Ordering Number	Flow Coefficient (Cv)	Dimensions L in. (mm)	Dimensions F in.
1/16	QM-FNS1-D	0.05	1.61 (40.9)	7/16
1/8	QM-FNS2-D		1.81 (46.0)	9/16

Bodies

Tube Fitting

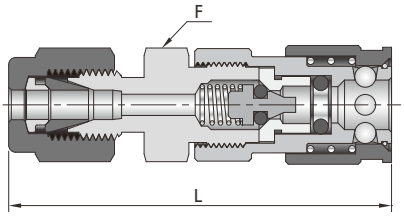

Fitting Size in.	Basic Ordering Number	Dimensions	
		L	F
		in. (mm)	in.
1/16	QM-FL1-B	1.50 (38.1)	7/16
1/8	QM-FL2-B	1.70 (43.2)	

Male NPT

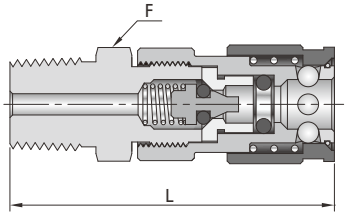

NPT Size in.	Basic Ordering Number	Dimensions	
		L	F
		in. (mm)	in.
1/16	QM-NS1-B	1.42 (36.1)	7/16
1/8	QM-NS2-B	1.44 (36.6)	

Female NPT

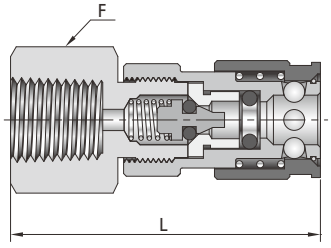

NPT Size in.	Basic Ordering Number	Dimensions	
		L	F
		in. (mm)	in.
1/16	QM-FNS1-B	1.43 (36.3)	7/16
1/8	QM-FNS2-B	1.62 (41.1)	9/16

Bulkhead Tube Fitting

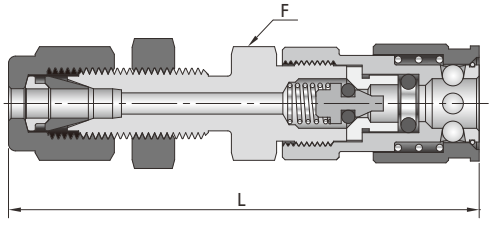

Fitting Size in.	Basic Ordering Number	Dimensions		Min. Panel Hole in. (mm)	Max.Panel Thickness in. (mm)
		L	F		
		in. (mm)	in.		
1/8	QM-BFL2-B	2.09 (53.1)	7/16	0.33 (8.3)	0.25 (6.4)

Full-flow Bodies

Tube Fitting

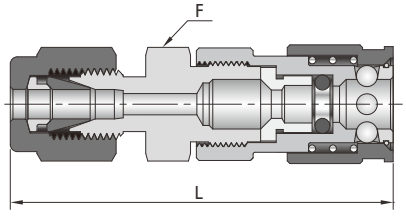

Fitting Size in.	Basic Ordering Number	Flow Coefficient (Cv)	Dimensions	
			L	F
			in. (mm)	in.
1/16	QM-FL1-F	0.06	1.50 (38.1)	7/16
1/8	QM-FL2-F		1.70 (43.2)	

Male NPT

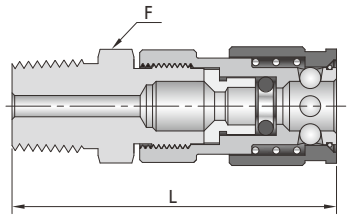

Fitting Size in.	Basic Ordering Number	Flow Coefficient (Cv)	Dimensions	
			L	F
			in. (mm)	in.
1/16	QM-NS1-F	0.06	1.42 (36.1)	7/16
1/8	QM-NS2-F		1.44 (36.6)	

Female NPT

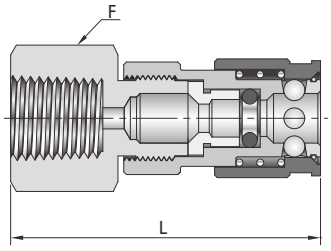

NPT Size in.	Basic Ordering Number	Flow Coefficient (Cv)	Dimensions	
			L	F
			in. (mm)	in.
1/16	QM-FNS1-F	0.06	1.43 (36.3)	7/16
1/8	QM-FNS2-F		1.62 (41.1)	9/16

Ordering Number Description

SS - QM - FNS2 - D - B - CE

Material

SS	316 SS
B	Brass

Series

QM

End Connection Type

FNS	Female NPT
NS	Male NPT
FRT	Female BSPT
RT	Male BSPT
FL	Fractional Tube Fitting
ML	Metric Tube fitting
BFL	Fractional Bulkhead Tube Fitting

End Connection Size

1	1/16"
2	1/8"

Stem or Body

S	Stem without valve remains open when uncoupled
D	Stem with valve shuts off when uncoupled
B	Body with valve shuts off when uncoupled
F	Full-flow body

O-ring Material

	Fluorocarbon FKM
B	Buna N
E	EPDM
N	Neoprene
Z	FFKM

Special Application

	NO
CE	NACE MR 0175

Notes: 1. "Ordering Number Description" is a reference to understand the combination rules of FITOK product part number. Not all combinations are available.
2. Dimensions are for reference only and are subject to change.

PTFE-Sealed Quick-Connects

QTM Series

Features

- ◎ Working pressure up to: 4500 psig (310 bar)
- ◎ Special design to reduce air inclusion and spillage
- ◎ PTFE sealing to enable applications for diverse media types
- ◎ Push-to-connect design to enable quick and easy operation
- ◎ Locking dog mechanism with large contact area retains stem
- ◎ Keyed option available

Double-end Shutoff (DESO)

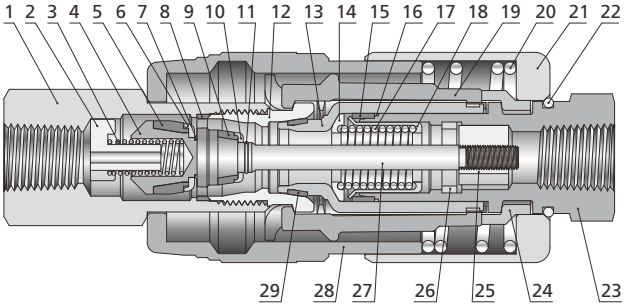

Single-end Shutoff (SESO)

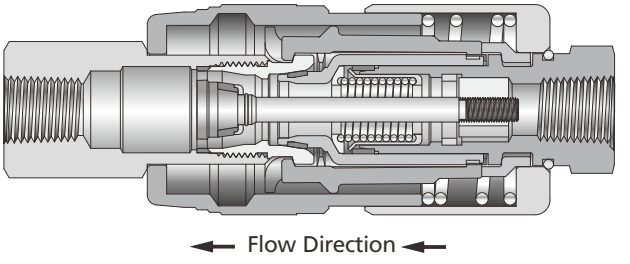

Pressure - Temperature Ratings

Temperature °F (°C)	316 SS			Alloy 400
	QTM2	QTM4	QTM8	QTM2
	Pressure Rating, psig (bar)			
Coupled				
0~120 (-17~48)	4500 (310)	3200 (220)		3200 (220)
120~212 (48~100)	800 (55.1)			
Uncoupled				
0~120 (-17~48)	1000 (68.9)			
120~212 (48~100)	800 (55.1)			
When Coupling and Uncoupling				
70 (20)	250 (17.2)	100 (6.8)	50 (3.4)	250 (17.2)

Note: Pressure ratings may be restricted by end connections.

Standard Materials of Construction

Item	Component	Material	
1	Stem	316 SS/A479	Alloy 400/B164
2	Spring seat	316 SS/A479	Alloy 400/B164
3	Spring	316 SS/313	Alloy X-750/ AMS 5699
4	DESO valve	316 SS/A479	Alloy 400/B164
5	DESO seal ring	PTFE/D1710	PTFE/D1710
6	DESO stem fin	316 SS/A479	Alloy 400/B164
7	Roundwire snap ring for shaft	316 SS/A313	Alloy X-750/ AMS 5699
8	Adapter seal gasket	PTFE/D1710	PTFE/D1710
9	Body valve seal ring	PTFE/D1710	PTFE/D1710
10	Body fin	316 SS/A479	Alloy 400/B164
11	Roundwire snap ring for shaft	316 SS/A313	Alloy X-750/ AMS 5699
12	Stem adapter	316 SS/A479	Alloy 400/B164
13	Body sliding sleeve	316 SS/A479	Alloy 400/B164
14	Spring pad	316 SS/A479	Alloy 400/B164
15	Body packing ring	PTFE/D1710	PTFE/D1710
16	Packing backup ring	PTFE/D1710	PTFE/D1710
17	Spring	Elgiloy Alloy	Elgiloy Alloy
18	Body insert	316 SS/A479	Alloy 400/B164
19	Sliding hooks with spring ring	316 SS/A479	Alloy 400/B164
20	Spring	316 SS/A313	Alloy X-750/ AMS 5699
21	Body valve cap 2	316 SS/A479	Alloy 400/B164
22	Roundwire snap rings for shaft	316 SS/A313	Alloy X-750/ AMS 5699
23	Body	Xylan-coated 316 SS/A479	Xylan-coated alloy 400/B164
24	Locking block	316 SS/A479	Alloy 400/B164
25	Threaded connecting ring	316 SS/A479	Alloy 400/B164
26	Retaining ring	316 SS/A313	Alloy X-750/ AMS 5699
27	Body bolt	316 SS/A479	Alloy 400/B164
28	Body valve cap 1	316 SS/A479	Alloy 400/B164
29	Body valve seal ring	PTFE/D1710	PTFE/D1710
30	Lubricants	PTFE-based	PTFE-based

Spillage and Air Inclusion

DESO only

Series	Max. Spillage cm^3	Max. Air Inclusion cm^3
QTM2	0.1	0.1
QTM4	0.2	0.4
QTM8	1.0	2.0

Insertion Depth

Series	Depth in. (mm)
QTM2	1.26 (32.1)
QTM4	0.95 (24.0)
QTM8	1.15 (29.1)

In order to measure overall length in the coupled position, insertion depth should be deducted from any overall stem and body combination length.

Dimensions

DESO Stems

Tube Fitting

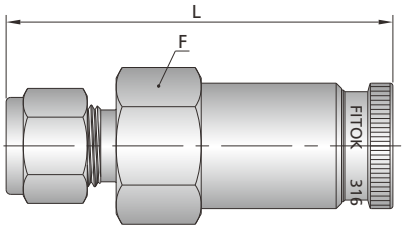

Fitting Size in.	Basic Ordering Number	Flow Coefficient (Cv)	Dimensions L in. (mm)	Dimensions F in.
1/4	-QTM2-FL4-D	0.6	2.02 (51.3)	5/8
1/4	-QTM4-FL4-D	0.8	2.61 (66.3)	15/16
3/8	-QTM2-FL6-D	0.8	2.08 (52.8)	11/16
3/8	-QTM4-FL6-D	1.6	2.67 (67.8)	15/16
1/2	-QTM8-FL8-D	3.1	3.06 (77.7)	1 5/16
3/4	-QTM8-FL12-D	6.5	3.06 (77.7)	1 5/16
1	-QTM8-FL16-D	7.8	3.27 (83.1)	1 3/8
mm	——	——	mm (in.)	mm
6	-QTM2-ML6-D	0.6	51.3 (2.02)	16
6	-QTM4-ML6-D	0.8	66.3 (2.61)	24
8	-QTM2-ML8-D	0.8	53.1 (2.09)	11/16 in.
10	-QTM4-ML10-D	1.6	68.1 (2.68)	24
12	-QTM8-ML12-D	3.1	77.7 (3.06)	35

Female NPT

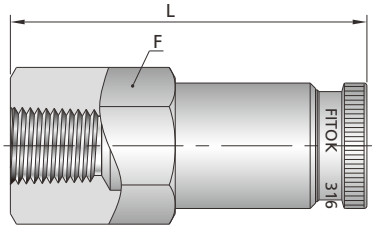

NPT Size in.	Basic Ordering Number	Flow Coefficient (Cv)	Dimensions L in. (mm)	Dimensions F in.
1/8	-QTM2-FNS2-D	0.7	1.73 (43.9)	5/8
1/4	-QTM2-FNS4-D	0.7	2.04 (51.8)	3/4
1/4	-QTM4-FNS4-D	1.4	2.36 (59.9)	15/16
3/8	-QTM2-FNS6-D	0.6	2.14 (54.4)	7/8
3/8	-QTM4-FNS6-D	1.7	2.48 (63.0)	15/16
1/2	-QTM8-FNS8-D	4.4	2.66 (67.6)	1 5/16
3/4	-QTM8-FNS12-D	7.8	2.66 (67.6)	1 5/16
1	-QTM8-FNS16-D	—	3.17 (80.5)	1 5/8

Female BSPT

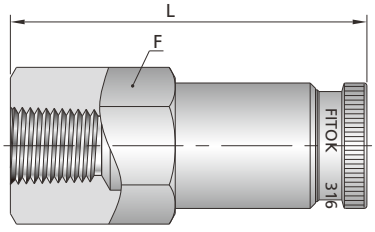

BSPT Size in.	Basic Ordering Number	Flow Coefficient (Cv)	Dimensions L in. (mm)	Dimensions F in.
1/8	-QTM2-FRT2-D	0.7	1.73 (43.9)	5/8
1/4	-QTM2-FRT4-D	0.7	2.04 (51.8)	3/4
1/4	-QTM4-FRT4-D	1.4	2.36 (59.9)	15/16
3/8	-QTM2-FRT6-D	0.6	2.14 (54.4)	7/8
3/8	-QTM4-FRT6-D	1.7	2.48 (63.0)	15/16
1/2	-QTM8-FRT8-D	4.4	2.66 (67.6)	1 5/16
3/4	-QTM8-FRT12-D	7.8	2.66 (67.6)	1 5/16
1	-QTM8-FRT16-D	—	3.17 (80.5)	1 5/8

Male NPT

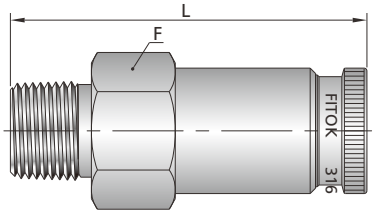

NPT Size in.	Basic Ordering Number	Flow Coefficient (Cv)	Dimensions L in. (mm)	Dimensions F in.
1/4	-QTM2-NS4-D	0.2	1.91 (48.5)	5/8
1/4	-QTM4-NS4-D	1.4	2.46 (62.5)	15/16
3/8	-QTM2-NS6-D	0.6	2.04 (51.8)	3/4
3/8	-QTM4-NS6-D	1.7	2.46 (62.5)	15/16
1/2	-QTM8-NS8-D	4.4	2.78 (70.6)	1 5/16
3/4	-QTM8-NS12-D	7.8	2.78 (70.6)	1 5/16
1	-QTM8-NS16-D	—	3.03 (77.0)	1 3/8

Male BSPT

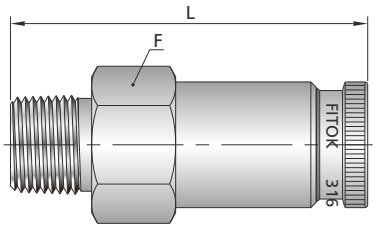

BSPT Size in.	Basic Ordering Number	Flow Coefficient (Cv)	Dimensions	
			L	F
			in. (mm)	in.
1/4	-QTM2-RT4-D	0.2	1.91 (48.5)	5/8
1/4	-QTM4-RT4-D	1.4	2.46 (62.5)	15/16
3/8	-QTM2-RT6-D	0.6	2.04 (51.8)	3/4
3/8	-QTM4-RT6-D	1.7	2.46 (62.5)	15/16
1/2	-QTM8-RT8-D	4.4	2.78 (70.6)	1 5/16
3/4	-QTM8-RT12-D	7.8	2.78 (70.6)	1 5/16
1	-QTM8-RT16-D	—	3.03 (77.0)	1 3/8

Male JIC (AN) 37° Flare

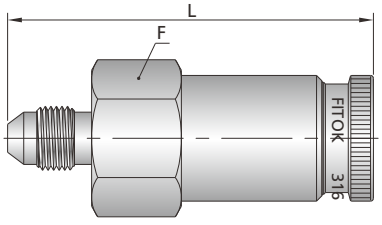

Fitting Size in.	Basic Ordering Number	Flow Coefficient (Cv)	Dimensions	
			L	F
			in. (mm)	in.
1/4	-QTM4-AN4-D	—	2.52 (64.0)	15/16
1/2	-QTM8-AN8-D	2.7	2.46 (70.6)	1 5/16

Bulkhead Tube Fitting

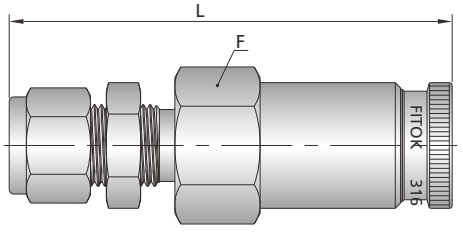

Fitting Size in.	Basic Ordering Number	Flow Coefficient (Cv)	Dimensions		Min. Panel Orifice	Max. Panel Thickness
			L	F		
			in. (mm)	in.	in. (mm)	in. (mm)
1/4	-QTM4-BFL4-D	0.8	3.05 (77.5)	15/16	0.46 (11.7)	0.15 (3.8)
3/8	-QTM4-BFL6-D	1.6	3.05 (77.5)	15/16	0.58 (14.7)	0.15 (3.8)
1/2	-QTM8-BFL8-D	3.1	3.54 (89.9)	1 5/16	0.77 (19.6)	0.19 (4.8)
mm	——	——	mm (in.)	mm	mm (in.)	mm (in.)
6	-QTM4-BML6-D	0.8	77.5 (3.05)	24	11.7 (0.46)	3.8 (0.15)
10	-QTM4-BML10-D	1.6	77.7 (3.06)	24	16.8 (0.66)	3.8 (0.15)
12	-QTM8-BML12-D	3.1	89.9 (3.54)	35	19.6 (0.77)	4.8 (0.19)

SESO Stem

Tube Fitting

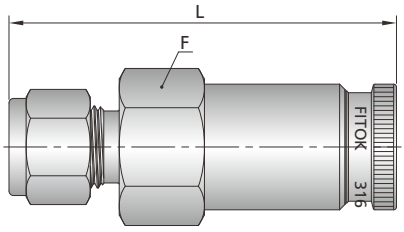

Fitting Size in.	Basic Ordering Number	Flow Coefficient (Cv)	Dimensions L in. (mm)	Dimensions F in.
1/4	-QTM2-FL4-S	0.7	2.02 (51.3)	5/8
1/4	-QTM4-FL4-S	0.9	2.61 (66.3)	15/16
3/8	-QTM2-FL6-S	0.9	2.08 (52.8)	11/16
3/8	-QTM4-FL6-S	1.7	2.67 (67.8)	15/16
1/2	-QTM8-FL8-S	4.2	3.06 (77.7)	1 5/16
3/4	-QTM8-FL12-S	6.7	3.06 (77.7)	1 5/16
1	-QTM8-FL16-S	9.0	3.27 (83.1)	1 3/8
mm	——	——	mm (in.)	mm
6	-QTM2-ML6-S	0.7	51.3 (2.02)	16
6	-QTM4-ML6-S	0.9	66.3 (2.61)	24
8	-QTM2-ML8-S	0.9	53.1 (2.09)	11/16 in.
10	-QTM4-ML10-S	1.7	68.1 (2.68)	24
12	-QTM8-ML12-S	4.2	77.7 (3.06)	35

Female NPT

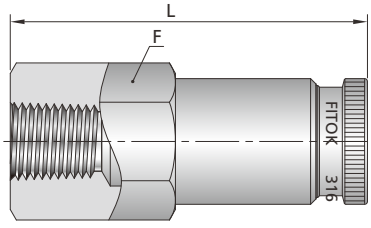

NPT Size in.	Basic Ordering Number	Flow Coefficient (Cv)	Dimensions L in. (mm)	Dimensions F in.
1/8	-QTM2-FNS2-S	0.7	1.73 (43.9)	5/8
1/4	-QTM2-FNS4-S	0.7	2.04 (51.8)	3/4
1/4	-QTM4-FNS4-S	1.4	2.36 (59.9)	15/16
3/8	-QTM2-FNS6-S	0.7	2.14 (54.4)	7/8
3/8	-QTM4-FNS6-S	1.8	2.48 (63.0)	15/16
1/2	-QTM8-FNS8-S	5.1	2.66 (67.6)	1 5/16
3/4	-QTM8-FNS12-S	8.5	2.66 (67.6)	1 5/16
1	-QTM8-FNS16-S	—	3.17 (80.5)	1 5/8

Female BSPT

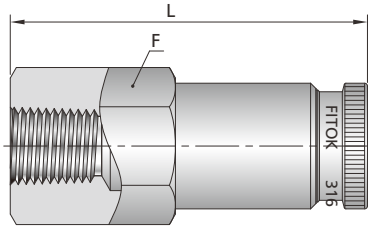

BSPT Size in.	Basic Ordering Number	Flow Coefficient (Cv)	Dimensions L in. (mm)	Dimensions F in.
1/8	-QTM2-FRT2-S	0.7	1.73 (43.9)	5/8
1/4	-QTM2-FRT4-S	0.7	2.04 (51.8)	3/4
1/4	-QTM4-FRT4-S	1.4	2.36 (59.9)	15/16
3/8	-QTM2-FRT6-S	0.7	2.14 (54.4)	7/8
3/8	-QTM4-FRT6-S	1.8	2.48 (63.0)	15/16
1/2	-QTM8-FRT8-S	5.1	2.66 (67.6)	1 5/16
3/4	-QTM8-FRT12-S	8.5	2.66 (67.6)	1 5/16
1	-QTM8-FRT16-S	—	3.17 (80.5)	1 5/8

Male NPT

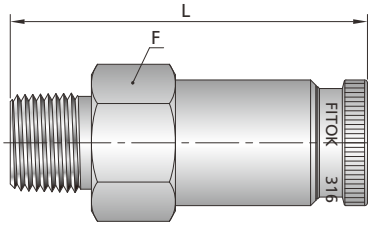

NPT Size in.	Basic Ordering Number	Flow Coefficient (Cv)	Dimensions L in. (mm)	Dimensions F in.
1/4	-QTM2-NS4-S	0.2	1.91 (48.5)	5/8
1/4	-QTM4-NS4-S	1.4	2.46 (62.5)	15/16
3/8	-QTM2-NS6-S	0.7	2.04 (51.8)	3/4
3/8	-QTM4-NS6-S	1.8	2.46 (62.5)	15/16
1/2	-QTM8-NS8-S	5.1	2.78 (70.6)	1 5/16
3/4	-QTM8-NS12-S	8.5	2.78 (70.6)	1 5/16
1	-QTM8-NS16-S	—	3.03 (77.0)	1 3/8

Male BSPT

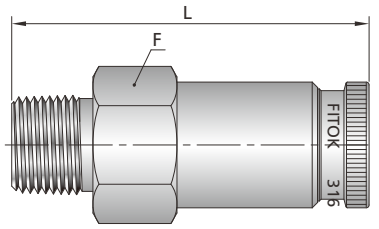

BSPT Size in.	Basic Ordering Number	Flow Coefficient (Cv)	Dimensions	
			L	F
			in. (mm)	in.
1/4	-QTM2-RT4-S	0.2	1.91 (48.5)	5/8
1/4	-QTM4-RT4-S	1.4	2.46 (62.5)	15/16
3/8	-QTM2-RT6-S	0.7	2.04 (51.8)	3/4
3/8	-QTM4-RT6-S	1.8	2.46 (62.5)	15/16
1/2	-QTM8-RT8-S	5.1	2.78 (70.6)	1 5/16
3/4	-QTM8-RT12-S	8.5	2.78 (70.6)	1 5/16
1	-QTM8-RT16-S	—	3.03 (77.0)	1 3/8

Male JIC(AN) 37° Flare

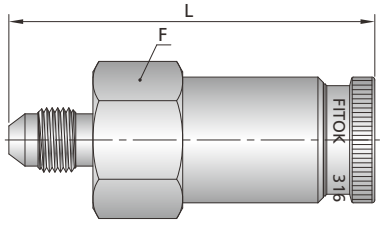

Fitting Size in.	Basic Ordering Number	Flow Coefficient (Cv)	Dimensions	
			L	F
			in. (mm)	in.
1/4	-QTM4-AN4-S	—	2.52 (64.0)	15/16
1/2	-QTM8-AN8-S	4.2	2.46 (70.6)	1 5/16

Bulkhead Tube Fitting

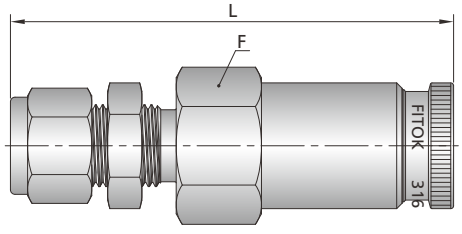

Fitting Size in.	Basic Ordering Number	Flow Coefficient (Cv)	Dimensions		Min. Panel Orifice	Max. Panel Thickness
			L	F		
			in. (mm)	in.	in. (mm)	in. (mm)
1/4	-QTM4-BFL4-S	0.9	3.05 (77.5)	15/16	0.46 (11.7)	0.15 (3.8)
3/8	-QTM4-BFL6-S	1.7	3.05 (77.5)	15/16	0.58 (14.7)	0.15 (3.8)
1/2	-QTM8-BFL8-S	4.2	3.54 (89.9)	1 5/16	0.77 (19.6)	0.19 (4.8)
mm	——	——	mm (in.)	mm	mm (in.)	mm (in.)
6	-QTM4-BML6-S	0.9	77.5 (3.05)	24	11.7 (0.46)	3.8 (0.15)
10	-QTM4-BML10-S	1.7	77.7 (3.06)	24	16.8 (0.66)	3.8 (0.15)
12	-QTM8-BML12-S	4.2	89.9 (3.54)	35	19.6 (0.77)	4.8 (0.19)

Bodies

Tube Fitting

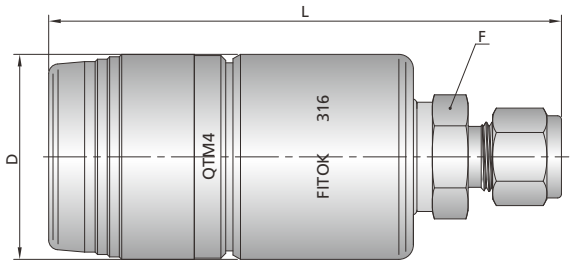

Fitting Size in.	Basic Ordering Number	Dimensions L in. (mm)	D in. (mm)	F in.
1/4	-QTM2-FL4-B	3.16 (80.3)	1.12 (28.4)	9/16
1/4	-QTM4-FL4-B	4.17 (106)	1.68 (42.7)	7/8
3/8	-QTM2-FL6-B	3.25 (82.6)	1.12 (28.4)	3/4
3/8	-QTM4-FL6-B	4.17 (106)	1.68 (42.7)	7/8
1/2	-QTM8-FL8-B	4.30 (109)	2.00 (50.8)	1 1/8
3/4	-QTM8-FL12-B	4.30 (109)	2.00 (50.8)	1 1/8
1	-QTM8-FL16-B	4.58 (116)	2.00 (50.8)	1 3/8
mm	——	——	mm (in.)	mm
6	-QTM2-ML6-B	80.3 (3.16)	28.4 (1.12)	15
6	-QTM4-ML6-B	106 (4.17)	42.7 (1.68)	24
8	-QTM2-ML8-B	80.3 (3.16)	28.4 (1.12)	15
10	-QTM4-ML10-B	106 (4.17)	42.7 (1.68)	24
12	-QTM8-ML12-B	109 (4.30)	50.8 (2.00)	30

Female NPT

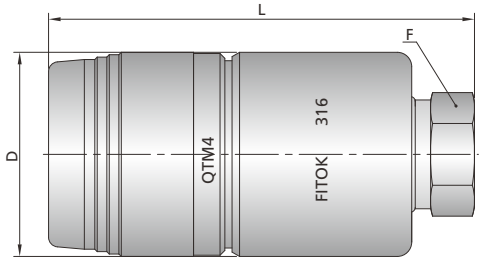

NPT Size in.	Basic Ordering Number	Dimensions L in. (mm)	D in. (mm)	F in.
1/8	-QTM2-FNS2-B	2.60 (66.0)	1.12 (28.4)	9/16
1/4	-QTM2-FNS4-B	2.99 (75.9)	1.12 (28.4)	3/4
1/4	-QTM4-FNS4-B	3.35 (85.1)	1.68 (42.7)	7/8
3/8	-QTM2-FNS6-B	3.04 (77.2)	1.12 (28.4)	7/8
3/8	-QTM4-FNS6-B	3.35 (85.1)	1.68 (42.7)	7/8
1/2	-QTM8-FNS8-B	3.53 (89.7)	2.00 (50.8)	1 1/8
3/4	-QTM8-FNS12-B	4.02 (102)	2.00(50.8)	1 5/16
1	-QTM8-FNS16-B	4.40 (112)	2.00 (50.8)	1 5/8

Female BSPT

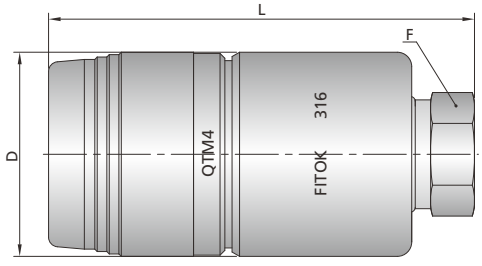

BSPT Size in.	Basic Ordering Number	Dimensions L in. (mm)	D in. (mm)	F in.
1/8	-QTM2-FRT2-B	2.60 (66.0)	1.12 (28.4)	9/16
1/4	-QTM2-FRT4-B	2.99 (75.9)	1.12 (28.4)	3/4
1/4	-QTM4-FRT4-B	3.35 (85.1)	1.68 (42.7)	7/8
3/8	-QTM2-FRT6-B	3.04 (77.2)	1.12 (28.4)	7/8
3/8	-QTM4-FRT6-B	3.35 (85.1)	1.68 (42.7)	7/8
1/2	-QTM8-FRT8-B	3.53 (89.7)	2.00 (50.8)	1 1/8
3/4	-QTM8-FRT12-B	4.02 (102)	2.00 (50.8)	1 5/16
1	-QTM8-FRT16-B	4.40 (112)	2.00 (50.8)	1 5/8

Male NPT

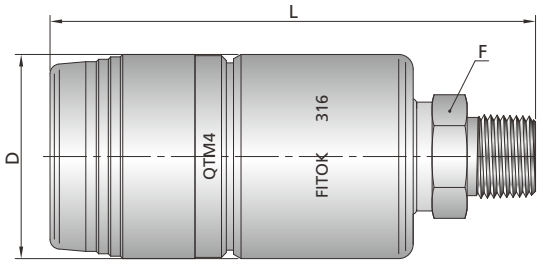

NPT Size in.	Basic Ordering Number	Dimensions		
		L	D	F
		in. (mm)	in. (mm)	in.
1/4	-QTM2-NS4-B	3.02 (76.7)	1.12 (28.4)	9/16
1/4	-QTM4-NS4-B	3.89 (98.8)	1.68 (42.7)	7/8
3/8	-QTM2-NS6-B	3.07 (78.0)	1.12 (28.4)	3/4
3/8	-QTM4-NS6-B	3.97 (100.8)	1.68 (42.7)	7/8
1/2	-QTM8-NS8-B	4.20 (107)	2.00 (50.8)	1 1/8
3/4	-QTM8-NS12-B	4.19 (106)	2.00 (50.8)	1 1/8
1	-QTM8-NS16-B	4.48 (114)	2.00 (50.8)	1 3/8

Male BSPT

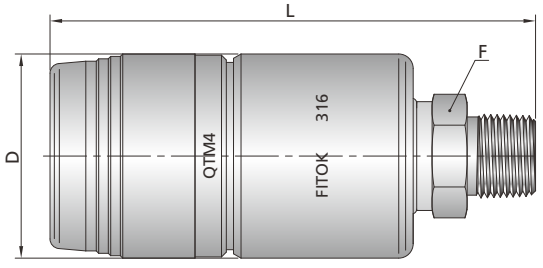

BSPT Size in.	Basic Ordering Number	Dimensions		
		L	D	F
		in. (mm)	in. (mm)	in.
1/4	-QTM2-RT4-B	3.02 (76.7)	1.12 (28.4)	9/16
1/4	-QTM4-RT4-B	3.89 (98.8)	1.68 (42.7)	7/8
3/8	-QTM2-RT6-B	3.07 (78.0)	1.12 (28.4)	3/4
3/8	-QTM4-RT6-B	3.97 (100.8)	1.68 (42.7)	7/8
1/2	-QTM8-RT8-B	4.20 (107)	2.00 (50.8)	1 1/8
3/4	-QTM8-RT12-B	4.19 (106)	2.00 (50.8)	1 1/8
1	-QTM8-RT16-B	4.48 (114)	2.00 (50.8)	1 3/8

Male JIC (AN) 37° Flare

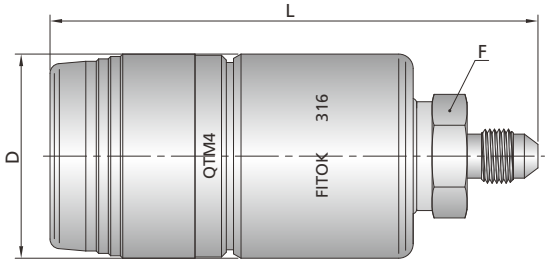

Fitting Size in.	Basic Ordering Number	Dimensions		
		L	D	F
		in. (mm)	in. (mm)	in.
1/4	-QTM4-AN4-B	3.89 (98.8)	1.68 (42.7)	7/8
1/2	-QTM8-AN8-B	4.20 (107)	2.00 (50.8)	1 1/8

Bulkhead Bodies

Bulkhead Tube Fitting

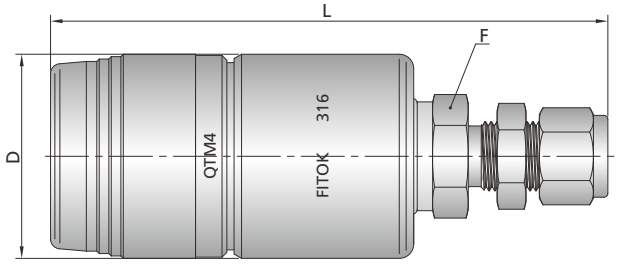

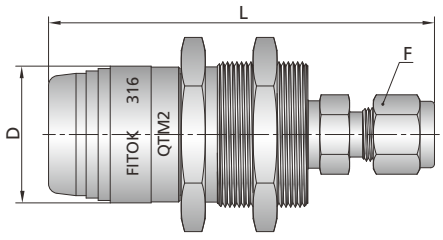

QTM2 Integral Bulkhead

Fitting Size in.	Basic Ordering Number	Dimensions L in. (mm)	Dimensions D in. (mm)	Dimensions F in.	Min. Panel Orifice in. (mm)	Max. Panel Thickness in. (mm)
1/4	-QTM2-BFL4-B	3.16 (80.3)	1.12 (28.4)	9/16	1.20 (30.6)	0.65 (16.5)
1/4	-QTM4-BFL4-B	4.42 (112)	1.68 (42.7)	7/8	0.46 (11.7)	0.15 (3.8)
3/8	-QTM4-BFL6-B	4.51 (115)	1.68 (42.7)	7/8	0.58 (14.7)	0.15 (3.8)
1/2	-QTM8-BFL8-B	4.78 (121)	2.00 (50.8)	1 1/8	0.77 (19.6)	0.19 (4.8)
mm	——	**mm (in.)**	**mm (in.)**	**mm**	**mm (in.)**	**mm (in.)**
6	-QTM2-BML6-B	80.3 (3.16)	28.4 (1.12)	15	30.6 (1.20)	16.5 (0.65)
6	-QTM4-BML6-B	112 (4.42)	42.7 (1.68)	24	11.7 (0.46)	3.8 (0.15)
10	-QTM4-BML10-B	115 (4.52)	42.7 (1.68)	24	16.8 (0.66)	3.8 (0.15)
12	-QTM8-BML12-B	121 (4.77)	50.8 (2.00)	30	19.6 (0.77)	4.8 (0.19)

Bulkhead Male NPT

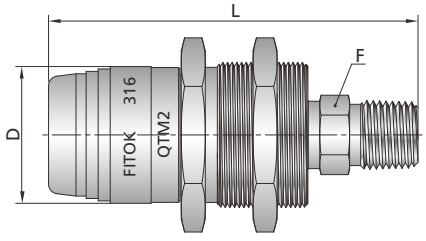

BSPT Size in.	Basic Ordering Number	Dimensions L in. (mm)	Dimensions D in. (mm)	Dimensions F in.	Min. Panel Orifice in. (mm)	Max. Panel Thickness in. (mm)
1/4	-QTM2-BNS4-B	3.02 (76.7)	1.12 (28.4)	9/16	1.20 (30.6)	0.65 (16.5)

Bulkhead Male BSPT

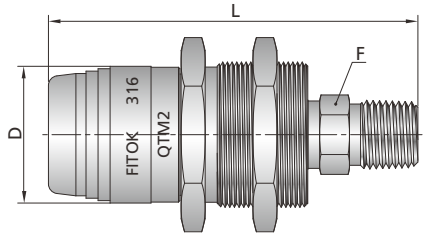

NPT Size in.	Basic Ordering Number	Dimensions L in. (mm)	Dimensions D in. (mm)	Dimensions F in.	Min. Panel Orifice in. (mm)	Max. Panel Thickness in. (mm)
1/4	-QTM2-BRT4-B	3.02 (76.7)	1.12 (28.4)	9/16	1.20 (30.6)	0.65 (16.5)

Bulkhead Female NPT

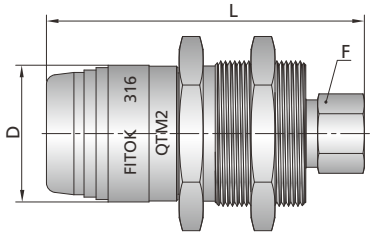

NPT Size in.	Basic Ordering Number	Dimensions L in. (mm)	Dimensions D in. (mm)	Dimensions F in.	Min. Panel Orifice in. (mm)	Max. Panel Thickness in. (mm)
1/8	-QTM2-BFNS2-B	2.60 (66.0)	1.12 (28.4)	9/16	1.20 (30.6)	0.65 (16.5)
1/4	-QTM2-BFNS4-B	2.96 (75.2)	1.12 (28.4)	3/4	1.20 (30.6)	0.65 (16.5)

Bulkhead Female BSPT

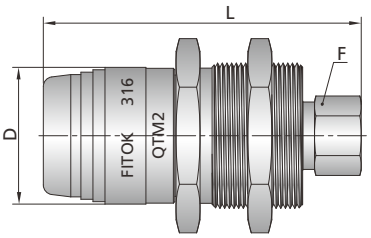

BSPT Size in.	Basic Ordering Number	Dimensions L in. (mm)	Dimensions D in. (mm)	Dimensions F in.	Min. Panel Orifice in. (mm)	Max. Panel Thickness in. (mm)
1/8	-QTM2-BFRT2-B	2.60 (66.0)	1.12 (28.4)	9/16	1.20 (30.6)	0.65 (16.5)
1/4	-QTM2-BFRT4-B	2.96 (75.2)	1.12 (28.4)	3/4	1.20 (30.6)	0.65 (16.5)

Options, QTM Series

Keyed QTM Series

FITOK keyed quick-connects feature foolproof mechanical design to prevent accidental mixing of different working lines in actual working conditions.



Features

◎ Keyed quick-connects will not interchange with any other FITOK keyed quick-connects
◎ If an attempt is made to couple unlike keys, the valve system will not open
◎ Stems and bodies are color coded and numbered for easy identification

QTM Series Key Numbers

QTM2 and QTM4 series quick-connects are available in keys K1 through K8.
QTM8 series quick-connects are available in keys K1 through K4 only (black, orange, green, or yellow).
Each key number and the corresponding color are shown in "Ordering Number Description" below.

Ordering Number Description

SS - QTM4 - FL6 - S - K1

Material	
SS	316 SS
M	Alloy 400

Series
QTM2
QTM4
QTM8

End Connection Type	
FNS	Female NPT
NS	Male NPT
FRT	Female BSPT
RT	Male BSPT
FL	Fractional Tube Fitting
ML	Metric Tube fitting
AN	Male JIC 37° Flare
BFL	Fractional Bulkhead Tube Fitting
BML	Metric Bulkhead Tube Fitting

End Connection Size	
4	1/4"
6	3/8" or 6 mm
8	1/2"or 8 mm
10	5/8"or 10 mm
12	3/4" or 12 mm
16	1"or 16 mm

Stem or Body	
S	Stem without valve remains open when uncoupled
D	Stem with valve shuts off when uncoupled
B	Body with valve shuts off when uncoupled

Key Number and Color	
	None
K1	Black
K2	Orange
K3	Green
K4	Yellow
K5	Blue
K6	White
K7	Purple
K8	Brown

Notes: 1. "Ordering Number Description" is a reference to understand the combination rules of FITOK product part number. Not all combinations are available.
2. Dimensions are for reference only and are subject to change.

Flat Face Quick-Connects

QP Series

Introduction

QP series quick-connects enable the quick coupling or uncoupling between various components in a cooling circulation system while minimizing air inclusion and spillage. With a compact design and high flow feature, the QP series quick-connects meet the refrigerants' requirement of rapid circulation and can maintain the optimal sealing capacity and cooling efficiency of the system. Compatible with most fluids such as water glycol, heat transfer oil, cooling water, etc., these quick-connects are widely used in cooling systems in electronics, photovoltaic, information technology, and other industries.

Features

- Flat head design to reduce air inclusion or spillage during coupling or uncoupling
- Ball locking design to ensure firm connection and availability for impact and vibrant occasions
- Unique internal structure design to realize maximum flow capacity
- Aluminum alloy and stainless steel with specially treated surface optional to provide excellent corrosion resistance
- Pressure relief valves optional for stems to avoid excessively high circuit pressure and protect the pipeline
- A variety of sealing ring materials optional to offer good compatibility with most fluids and extensive temperature coverage

Technical Parameters

- Body Material: Stainless Steel or Aluminum Alloy
- Working Pressure: 290 psig (20 bar)
- Working Temperature:
  FKM: -4 °F to 392 °F (-20 °C to 200 °C)
  FFKM: -4 °F to 527 °F (-20 °C to 275 °C)
  NBR: -22 °F to 212 °F (-30 °C to 100 °C)
  EPDM: -40 °F to 300 °F (-40 °C to 148 °C)
  FVMQ: -40 °F to 347 °F (-40 °C to 175 °C)
- Flow Coefficient (Cv): QP8: 0.9
  QP10: 3.5
  QP12: 5.4

Notes: 1. The above Cv values are for stem-to-body flow and may decline depending on specifications of fittings configured.
2. For coupling and uncoupling under pressure, please contact FITOK Group or our authorized distributors.

Spillage and Air Inclusion

Series	Max. Spillage cm^3	Max. Air Inclusion cm^3
QP8	0.01	0.01
QP10	0.01	0.02
QP12	0.02	0.04

Insertion Depth

Series	Insertion Depth mm (in.)
QP8	26.76 (1.05)
QP10	38.32 (1.51)
QP12	44.45 (1.75)

In order to measure the overall length in the coupled position, the insertion depth should be deducted from any overall stem and body combination length.

Construction Materials

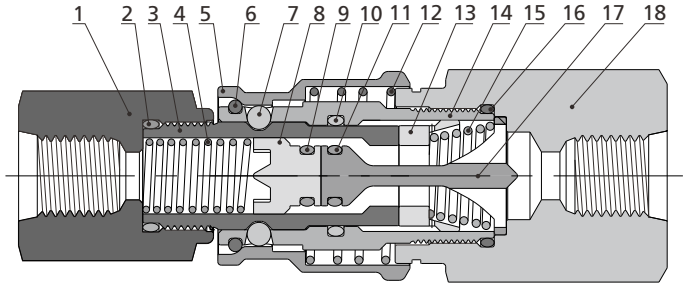

Item	Component	Stainless Steel	Aluminum Alloy
		Material Grade/ASTM Specification	
1	Nuts	316 SS/A479	6061-T6/B211
2	O-rings	FKM/FFKM/NBR/EPDM/FVMQ	
3	Stem body	316 SS/A479	6061-T6/B211
4	Springs	304 SS/A313	
5	Stem sleeve	316 SS/A479	6061-T6/B211
6	Snap rings	304 SS/A313	
7	Balls	304 SS	
8	Stem valve head	316 SS/A479	6061-T6/B211
9	O-rings	FKM/FFKM/NBR/EPDM/FVMQ	
10	O-rings	FKM/FFKM/NBR/EPDM/FVMQ	
11	O-rings	FKM/FFKM/NBR/EPDM/FVMQ	
12	Springs	304 SS/A313	
13	Block	316 SS/A479	6061-T6/B211
14	Housing	316 SS/A479	6061-T6/B211
15	Springs	304 SS/A313	
16	O-rings	FKM/FFKM/NBR/EPDM/FVMQ	
17	Body valve head	316 SS/A479	6061-T6/B211
18	Body	316 SS/A479	6061-T6/B211

Note: For fittings made of other materials, please contact FITOK Group or our authorized distributors.

Dimensions

Stems

Tube Fitting

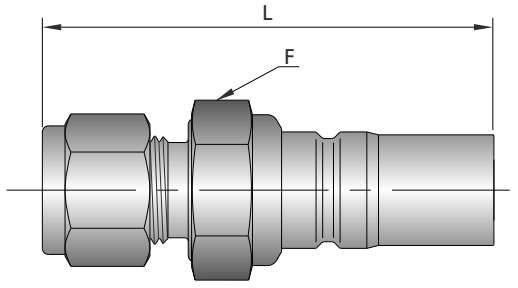

Fitting Size	Basic Ordering Number	L	F
in.		in. (mm)	in.
1/4	-QP8-FL4-D	2.33 (59.1)	13/16
3/8	-QP8-FL6-D	2.39 (60.8)	13/16
1/2	-QP10-FL8-D	3.15 (80)	1-1/8
3/4	-QP12-FL12-D	3.56 (90.4)	1-1/8
mm	—	mm (in.)	mm
6	-QP8-ML6-D	59.5 (2.34)	22
10	-QP8-ML10-D	61 (2.34)	22
12	-QP10-ML12-D	80 (3.15)	30
20	-QP12-ML20-D	92 (3.62)	32

Bulkhead Tube Fitting

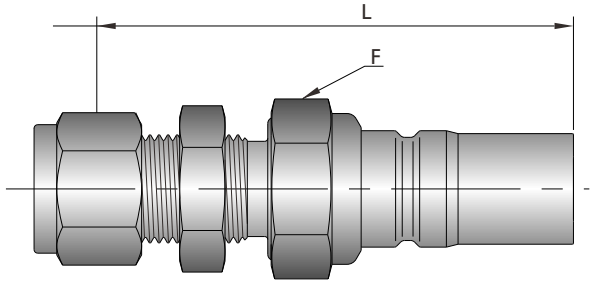

Fitting Size	Basic Ordering Number	L	F
in.		in. (mm)	in.
1/4	-QP8-BFL4-D	2.7 (68.6)	13/16
3/8	-QP8-BFL6-D	2.85 (72.4)	13/16
1/2	-QP10-BFL8-D	3.56 (90.4)	1-1/8
3/4	-QP12-BFL12-D	4.24 (107.7)	1-1/8
mm	—	mm (in.)	mm
6	-QP8-BML6-D	68.2 (2.69)	22
10	-QP8-BML10-D	73.9 (2.91)	22
12	-QP10-BML12-D	89.6 (3.15)	30

SAE Straight Thread Fitting

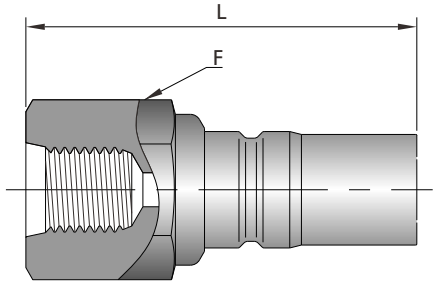

Fitting Size	Basic Ordering Number	L	F
SAE Thread		in. (mm)	in. (mm)
9/16-18	-QP8-US9-D	2.42 (61.54)	1 (25.4)
3/4-16	-QP8-US12-D	2.59 (65.7)	1.19 (30.2)
1 1/16-12	-QP10-US17-D	3.37 (85.6)	1.63 (41.3)
1 5/16-12	-QP12-US21-D	3.74 (94.9)	1.94 (49.21)

OG Port

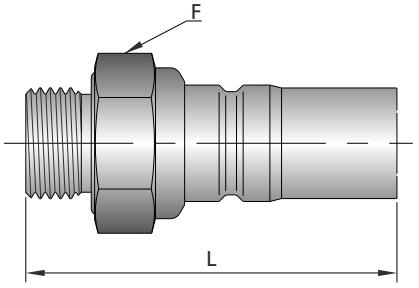

Series	Basic Ordering Number	Port Specification	L	F
			mm (in.)	mm (in.)
QP8	-QP8-OG8-D	1/2"	54.5 (2.15)	1.19 (30.2)
QP10	-QP10-OG8-D	1/2"	70.1 (2.76)	1.19 (30.2)
QP12	-QP12-OG8-D	1/2"	79 (3.11)	1.19 (30.2)

Bodies

Tube Fittings

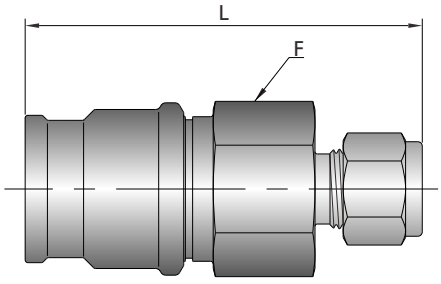

Fitting Size	Basic Ordering Number	L	F
in.		in. (mm)	in.
1/4	-QP8-FL4-B	2.74 (69.6)	1-1/8
3/8	-QP8-FL6-B	2.81 (71.3)	1-1/8
1/2	-QP10-FL8-B	3.81 (96.9)	1-7/16
3/4	-QP12-FL12-B	4.73 (120.1)	1-5/8
mm	—	mm (in.)	mm
6	-QP8-ML6-B	70 (2.76)	30
10	-QP8-ML10-B	71.5 (2.81)	30
12	-QP10-ML12-B	96.9 (3.81)	35
20	-QP12-ML20-B	121.7 (4.79)	41

Bulkhead Tube Fitting

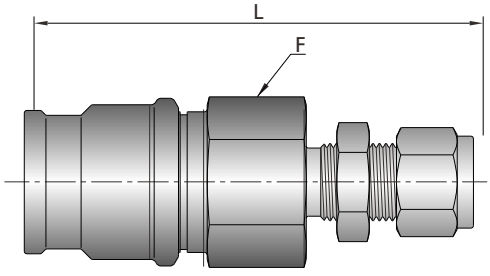

Fitting Size	Basic Ordering Number	L	F
in.		in. (mm)	in. (mm)
1/4	-QP8-BFL4-B	3.11 (79.1)	1-1/8
3/8	-QP8-BFL6-B	3.26 (82.9)	1-1/8
1/2	-QP10-BFL8-B	4.22 (107.29)	1-7/16
3/4	-QP12-BFL12-B	5.41 (137.4)	1-5/8
mm	—	mm (in.)	mm
6	-QP8-BML6-B	78.7 (3.10)	30
10	-QP8-BML10-B	84.4 (3.32)	30
12	-QP10-BML12-B	106.5 (4.19)	35

SAE Straight Thread Fitting

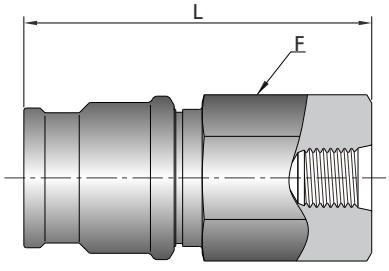

Fitting Size	Basic Ordering Number	L	F
SAE Thread		in. (mm)	in. (mm)
9/16-18	-QP8-US9-B	2.6 (66.14)	1.19 (30.2)
3/4-16	-QP8-US12-B	2.77 (70.3)	1.19 (30.2)
1 1/16-12	-QP10-US17-B	3.92 (99.52)	1.63 (41.3)
1 5/16-12	-QP12-US21-B	4.79 (121.6)	1.94 (49.21)

BT Port

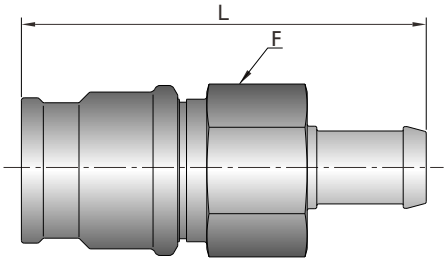

Series	Basic Ordering Number	Port Specification	L	F
			mm (in.)	mm (in.)
QP8	-QP8-BT12-B	3/4"	83.1 (3.27)	28.9 (1.13)
QP10	-QP10-BT12-B	3/4"	105 (4.13)	38.1 (1.5)
QP12	-QP12-BT12-B	3/4"	126.7 (4.99)	41.3 (1.63)

Port Type

1. Male OG Port

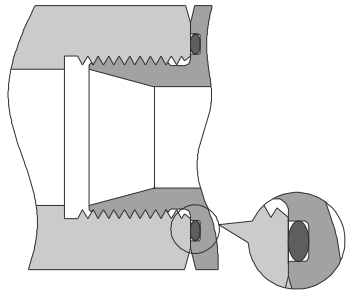

◎ Male OG complies with ISO 228-1
◎ O-ring seal

2. BT Port

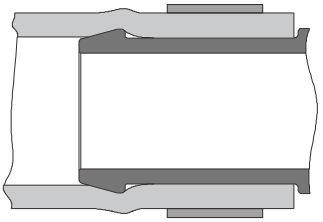

◎ BT port complies with QC/T 621.3

Ordering Number Description

SS - QP10 – OG8 – D – L – V

Material	
SS	316 SS
AL	Aluminum Alloy

Series
QP8
QP10
QP12

End Connection Type	
FL	Fractional Tube Fitting
ML	Metric Tube Fitting
BFL	Fractional Bulkhead Tube Fitting
BML	Metric Bulkhead Tube Fitting
US	SAE/MS Straight Thread
OG	ISO Male Parallel Thread (For O-ring)
BT	Hose Connector

End Connection Size	
4	1/4"
6	3/8" or 6 mm
8	1/2" or 8 mm
9	9/16-18
10	5/8" or 10 mm
12	3/4" or 12 mm
17	1 1/16-12
19	1 3/16-12
20	20 mm
21	1 5/16-12

Stem or Body	
D	Stem
B	Body

Sealing Material	
	FKM
B	NBR
Z	FFKM
E	EPDM
L	FVMQ

Pressure Relief Valve	
	None
V	Pressure relief valve for stem only

Notes: "Ordering Number Description" is a reference to understanding the combination rules of FITOK product part number.
Not all combinations are available. If you have any questions, please contact FITOK Group or our authorized distributors.

Condensate Pots



Condensate Pots

Features

◎ Suitable for application with water, oil or gas
◎ Chambers are made from seamless pipe and weld caps
◎ Full-penetration gas tungsten arc -weld construction to ensure great strength and leak-tight performance
◎ Five pressure ratings available

Technical Data

◎ Working pressure up to: Class 2500 as per ASME B16.34
◎ Socket weld connection as per ASME B16.11
◎ Butt welding ends as per ASME B16.9
◎ NPT as per ASME B1.20.1 taper pipe thread
◎ All condensate pots are factory tested fully prior to shipment
◎ Standard material of construction: 316 SS, 304 SS, Carbon steel
◎ Pipe schedule: 40, 80, 160, XXS seamless steel
◎ Variety of end connections available

Materials of Construction

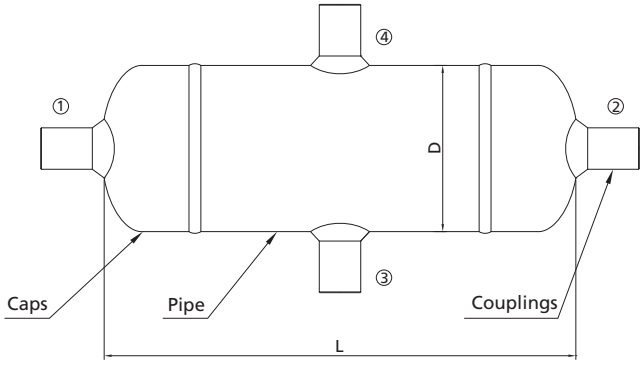

Material	Pipe	Cap
316 SS	TP316/A312	F316/A182
321 SS	TP321/A312	F321/A182
304 SS	304 SS/A312	F304/A182
CS	A106	A105
316L SS	TP316L/A312	F316L/A182
304L SS	TP304L/A312	F304L/A182

Dimensions

Dimensions are for reference only and are subject to change.

Pipe	Ø D, in (mm)	L, in (mm)	Capacity (L)
NPS 3	3.50 (88.9)	8.46 (215.0)	0.8
NPS 4	4.50 (114.3)	14.2 (360.0)	2.6

Configuration

Designator	Schematic	Designator	Schematic
2A		3B	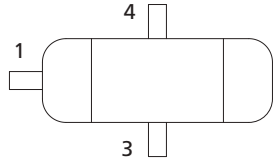
2B	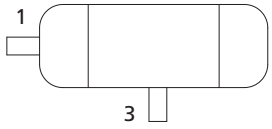	3C	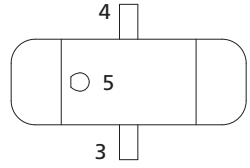
3A	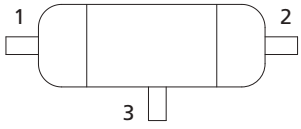	4A	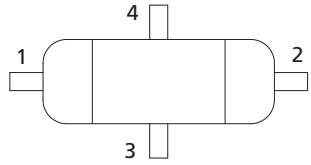

Ordering Number Description

SS – CP – 36 – 4A – FNS8 – MTS14 – MTB12 – SF2

Body Material	Series	Body O.D.	ANSI Class	Configuration	Connection 1 Type	Connection 1 Size	Connection 2 to 5 Type	Connection 2 to 5 Size	Special Application	Cleaning and Packaging
SS 316 SS	CP	3 NPS 3	3 Class 300	2A	FNS Female NPT	2 1/8"	Same as connection 1	Same as connection 1	NO	FC-01
6L 316L SS		4 NPS 4	6 Class 600	2B	FRT Female BSPT	4 1/4"	Specified in the same way as the connection 1 type and size		S NACE MR0175	F2 FC-02
S4 304 SS			9 Class 900	3A	TS Fractional Tube Socket Weld	8 1/2" or 8 mm				
4L 304L SS			15 Class 1500	3B	MTS Metric Tube Socket Weld	10 10 mm				
S1 321 SS			25 Class 2500	3C	TB Fractional Tube Butt Weld	12 3/4" or 12 mm				
CS Carbon Steel				4A	MTB Metric Tube Butt Weld	14 14 mm				
					PS Pipe Socket Weld	16 1" or 16 mm				
					PB Pipe Butt Weld					
					FL Fractional Tube Fitting					
					ML Metric Tube Fitting					
					FT Fractional Tubing					
					MT Metric Tubing					
					RB RB-Bleed Valve (normative)					

Note: 1. The ordering number can be simplified if all connections are the same.
Example: SS-CP-36-4A-FNS8.
2. "Ordering Number Description" is a reference to understand the combination rules of FITOK product part number. Not all combinations are available.

Sampling Assemblies, Sample Cylinders and Accessories

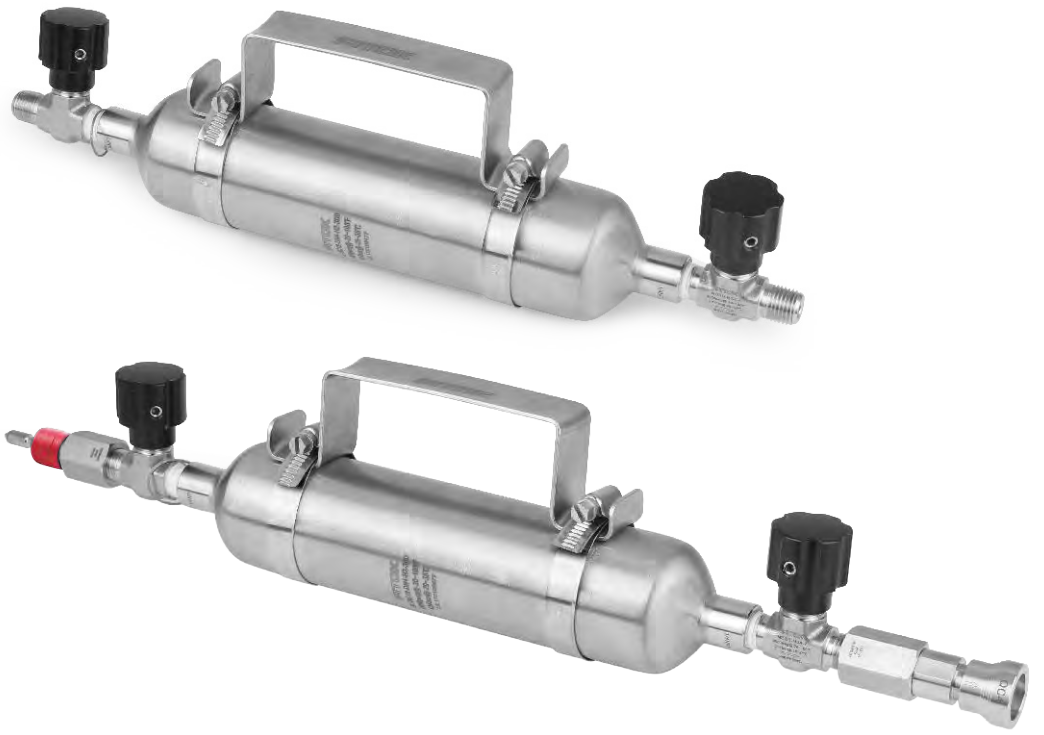

Sampling Assemblies

Features



- ◎ Sampling assemblies are widely used in liquid, liquefied gas and gas collection and sampling as sampling accessories
- ◎ Simple structure for easy assembling and disassembling. Safe and reliable transportation with rupture disc
- ◎ QC4 series quick-connects at double ends with excellent sealing performance, interchangeable with other key manufacturers' quick-connects
- ◎ Customized upon request
- ◎ Working Temperature: 0°F~200°F (-17°C~93°C)

Construction

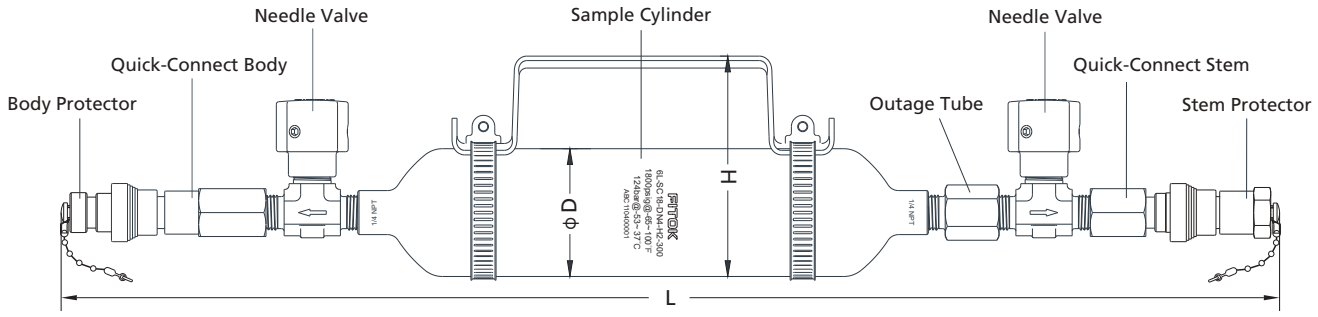

Name	Part Number	Description	Designator
Rupture Disc Tee	☐☐-TM4-F4-RD19	Refer to "Ordering Information and Dimensions" on page E-14	P
	☐☐-TM4-F4-RD28	Refer to "Ordering Information and Dimensions" on page E-14	Q
Needle Valve	ND☐☐-NS4-7	1/4 in. Male NPT, PCTFE stem tip and FKM O-ring	D
	ND☐☐-NS4-FNS4-7	1/4 in. Female NPT, PCTFE stem tip and FKM O-ring	E
	ND☐☐-NS4-FNS4-7-SAFE1	With 1900 psig rupture disc	B
	ND☐☐-NS4-FNS4-7-SAFE2	With 2850 psig rupture disc	G
Quick-Connect Body	☐☐-QC4-NS4-B (or ☐☐-QC4-FNS4-B)	QC4 series quick-connects, double-end shutoff, FKM O-ring	C
Quick-Connect Stem	☐☐-QC4-NS4-D (or ☐☐-QC4-FNS4-D)		
Stem Protector	☐☐-QC4-SP	QC4 series quick-connect protector	R
Body Protector	☐☐-QC4-BP		
Sample Cylinder	See "Ordering Number Description"	Volume 290~3785 ml available	/
Outage Tube	☐☐-OT☐☐☐☐-NS4-FNS4	Refer to "Ordering Information" on page E-19	/

Note: Other accessories, such as pressure gauges, spring relief devices and the hoses, etc. are available. For details, please contact FITOK Group or our authorized distributors.

Ordering Information

Basic Ordering Number	Dimensions in. (mm)		
	D	H	L
6L-SC18-DN4-H2-300-DOT-P2	2.00 (50.8)	3.46 (88.0)	10.76 (273.4)
6L-SC18-DN4-H2-OT5232-300-DOT-D1	2.00 (50.8)	3.46 (88.0)	13.39 (340.0)
6L-SC18-DN4-T-H2-OT5338-500-DOT-DCR1	2.00 (50.8)	3.46 (88.0)	23.96 (608.7)
4L-SC18-DN4-H2-OT5306-1000-DOT-BCR2S	3.50 (88.9)	5.04 (128.0)	20.93 (531.7)

Note: Dimensions and types listed are standard, other dimensions and types are available.
For details, please contact FITOK Group or our authorized distributors.

Sample Cylinders and Accessories

Sample Cylinders



Application

- Hydrocarbon sampling for refineries
- Gas sampling for chromatography experiments
- Condensate sampling for fossil fuel and nuclear power plants
- As surge accumulators or reaction vessels
- As snubbers in reactor feed lines

Features

- Capacities from 40 cm^3 to 3785 cm^3 (1 gal)
- Spun cylinder body machined from seamless tubing to provide consistent wall thickness, size and capacity
- Cold-formed female NPT thread to provide high strength
- 1/8", 1/4" and 1/2" female NPT connections
- Full-penetration gas tungsten arc-weld construction to ensure no leak for sampling (single-ended cylinder only)
- DOT and non-DOT cylinders available
- Accessories, such as valves, relief devices, outage tubes, carrying handles, caps and plugs available

Design

FITOK sample cylinders are designed and manufactured in compliance with 49 CFR, the stringent regulation of U.S. Department of Transportation, to provide high reliability and long service life.

Spun cylinders are made of seamless tubing to increase the wall thickness of neck transitions and thread areas which provides high strength to reduce the leak risks.

The cylinders are internal sandblasted to ensure smooth surface and minimized remaining particles for easy cleaning.

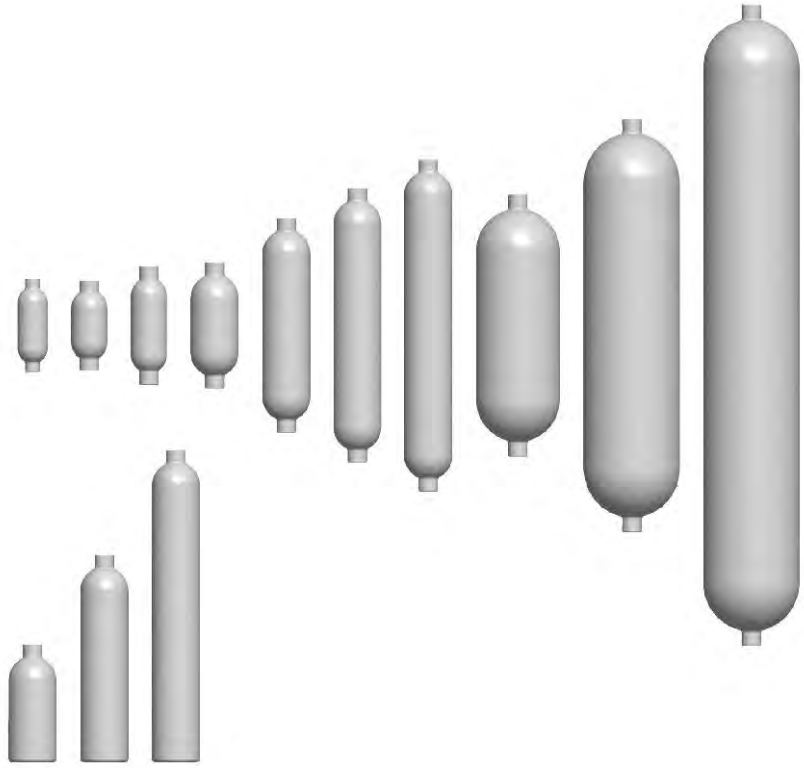

Materials

FITOK DOT cylinders are available in 304L SS and 316L SS. FITOK non-DOT cylinders are available in 304L SS, 316 L SS and Alloy 400. For cylinders of other materials, please contact FITOK Group or our authorized distributors.

Pressure - Temperature

Material	316L SS ①	316L SS, 304L SS ①	316L SS, 304L SS ①	Alloy 400	316L SS, 304L SS ①	304L SS
DOT Specification	DOT-3A 5000	DOT-3E 1800	DOT-3A 1800	—	—	—
Temperature, °F (°C)	Working Pressure, psig (bar)					
-65 (-53) to 100 (37)	5000 (344)	1800 (124)	1800 (124)	1800 (124)	1000 (69.0)	500 (34.4)
200 (93)	3960 (272)	1360 (93.7)	1360 (93.7)	1580 (108)	840 (57.8)	500 (34.4)
300 (148)	3570 (245)	1230 (84.7)	1230 (84.7)	1490 (102)	760 (52.3)	500 (34.4)
400 (204)	3290 (226)	1130 (77.8)	1130 (77.8)	1430 (98.5)	700 (48.2)	500 (34.4)
500 (260)	3060 (210)	1050 (72.3)	1050 (72.3)	1420 (97.8)	650 (44.7)	500 (34.4)
600 (315)	2920 (201)	1000 (69.0)	1000 (69.0)	1420 (97.8)	620 (42.7)	500 (34.4)
650 (343)	2870 (197)	980 (67.5)	980 (67.5)	1420 (97.8)	610 (42.0)	500 (34.4)
700 (371)	2810 (193)	970 (66.8)	970 (66.8)	1420 (97.8)	590 (40.6)	500 (34.4)
750 (398)	2750 (189)	950 (65.4)	950 (65.4)	1410 (97.1)	580 (39.9)	500 (34.4)
800 (426)	2700 (186)	930 (64.0)	930 (64.0)	—	570 (39.2)	500 (34.4)
850 (454)	2640 (181)	—	—	—	560 (38.5)	—

① DOT and non-DOT cylinders available.
② Available only for miniature sample cylinders.
Notes: 1. Working temperature is limited to 300°F (148°C) maximum for cylinders with PTFE internal coating.
2. Working pressure and temperature may be restricted by individual local government regulations.

Testing

Single-ended Cylinders

All single-ended cylinders are hydrostatically tested at 1000 psig (69 bar).

Double-ended Cylinders

All double-ended cylinders are hydrostatically tested to at least 5/3 times the working pressure.
DOT-3A 1800 cylinders are hydrostatically tested at 3000 psig (206 bar) minimum .
DOT-3E 1800 cylinders are hydrostatically tested at 3050 psig (210 bar).
DOT-3A 5000 cylinders are hydrostatically tested at 8500 psig (586 bar) minimum.
Note: It is the responsibility of the party filling the cylinder to have it retested by an approved facility, at the required intervals.

Transportable Pressure Equipment Directive (TPED)

The Transportable Pressure Equipment Directive (TPED) provides requirements for the design, manufacturing, and testing of transportable pressure vessels and accessories, including sample cylinders and rupture discs. The directive aims to provide a uniform level of product safety throughout the European Union countries.
For information about FITOK TPED-compliant products, please refer to FITOK Catalog *Sample Cylinders Compliant with the Transportable Pressure Equipment Directive (TPED)*.

Technical Data

Dimensions are for reference only and are subject to change.

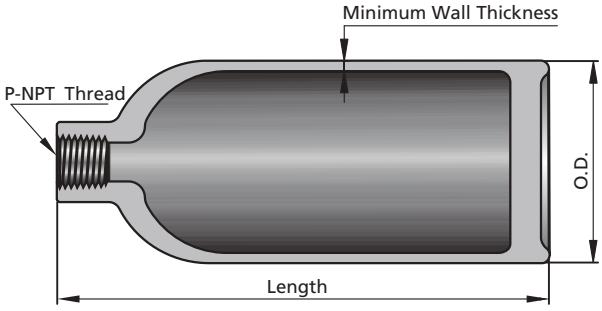

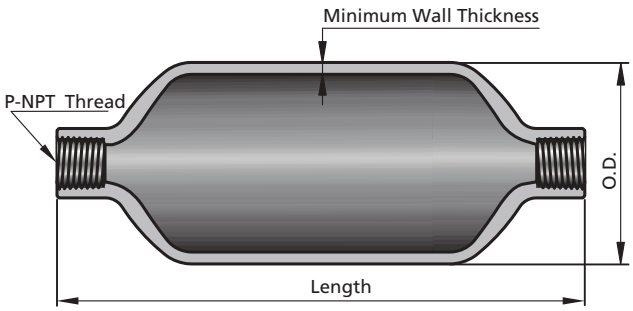

Material Grade/Cylinder Specification	Pressure Rating psig (bar)	Internal Volume (cm^3±10%)	P in.	Dimensions, in. (mm)			Weight lb (kg)
				O.D.	Length	Minimum Wall Thickness	
Single-ended							
304L SS	500 (34.4)	150	1/4	2.00 (50.8)	4.88 (124)	0.093 (2.4)	1.10 (0.50)
		300			8.62 (219)		1.80 (0.82)
		500			13.6 (345)		2.70 (1.2)
Double-ended							
304L SS/ DOT-3E 1800	1800 (124)	40	1/8	1.25 (31.8)	3.88 (98.6)	0.070 (1.8)	0.31 (0.14)
		50	1/4	1.5 (38.1)	3.75 (95.2)	0.093 (2.4)	0.38 (0.17)
		75			4.94 (125)		0.62 (0.28)
		150①	1/4	2.00 (50.8)	5.25 (133)		0.94 (0.43)
		290			8.86 (225)		1.79 (0.81)
		300①			8.94 (227)		1.80 (0.83)
		400			11.4 (290)		2.10 (0.95)
		500①			13.8 (351)		2.61 (1.20)
316L SS/ DOT-3A 1800	1800 (124)	1000①	1/4 or 1/2	3.50 (88.9)	10.9 (277)	0.180 (4.6)	6.50 (2.90)
304L SS/ DOT-3A 1800	1800 (124)	1000①	1/4 or 1/2	3.50 (88.9)	10.9 (277)	0.180 (4.6)	6.50 (2.90)
		2250①	1/4 or 1/2	4.00 (102)	17.2 (437)	0.206 (5.2)	14.00 (6.40)
		3785① (1 gal)			26.7 (678)		21.00 (9.50)
316L SS/ DOT-3E 1800	1800 (124)	150①	1/4	2.00 (50.8)	5.25 (133)	0.093 (2.4)	0.94 (0.43)
		290			8.86 (225)		1.79 (0.81)
		300①			8.94 (227)		1.80 (0.83)
		500①			13.8 (351)		2.60 (1.20)
316L SS/ DOT-3A 5000	5000 (344)	150①	1/4	1.90 (48.2)	8.00 (203)	0.240 (6.1)	3.00 (1.40)
		300①			14.5 (368)		5.60 (2.50)
		500①			23.5 (597)		9.10 (4.10)
Alloy 400	1800 (124)	150	1/4	2.00 (50.8)	5.25 (133)	0.093 (2.4)	0.94 (0.43)
		300			8.94 (227)		1.80 (0.82)
		500			13.8 (351)		2.90 (1.30)

① DOT cylinders are available.

Options for Internal Cylinder Surface Treatments

PTFE Coating

The internal cylinder surface can be coated with PTFE to provide a nonstick surface for easy cleaning.

Electropolishing

Electropolishing can provide a clean internal surface with a high degree of passivation.

Cleaning and Packaging

All FITOK sample cylinders and cylinder valves are cleaned and packaged in accordance with FITOK *FC-01 Standard Cleaning and Packaging.*
FITOK *FC-02 Special Cleaning and Packaging* in compliance with the requirements of ASTM G93 Level C is optional.

Special Application Sample Cylinder

SilcoNert® 2000 (Sulfinert®) coated sample cylinders available, SilcoNert® 2000 (Sulfinert®) coating to provide stable storage of sulfur and mercury compounds at ppb levels in petroleum samples for a long time.
SilcoNert® 2000 (Sulfinert®) coating not flaking off and more durable than Teflon coating.
To order SilcoNert® 2000 (Sulfinert®) coated products, please add -SI as a suffix to the standard ordering number.
Example: 6L-SC18-DN4-H2-500-SI

Overpressure Protection

Cylinders for compressed air must be equipped with pressure relief devices in accordance with US DOT regulations and CGA Pamphlet S-1.1. The CGA Pamphlet lists devices that can be used with specific gases. It also contains information on other types of pressure relief devices.

⚠ Be sure to use the correct pressure relief device for the gas being used.

⚠ Proper filling of the cylinder according to DOT specifications or other local regulations, is critical in preventing overpressurization.

Rupture Disc Kits

Rupture disc kits protect sample cylinder from overpressurization by venting the gas to atmosphere.
The rupture disc kits are used to be installed in valves or rupture disc tees and sealed by O-rings.
The rupture disc kits can be easily replaced without removing valves or tees from cylinders.

Materials of Construction

Component	Material Grade/ASTM Specification
Body, inlet ring	316 SS/A479
Rupture disc	Alloy 600/B168
O-ring	Fluorocarbon FKM

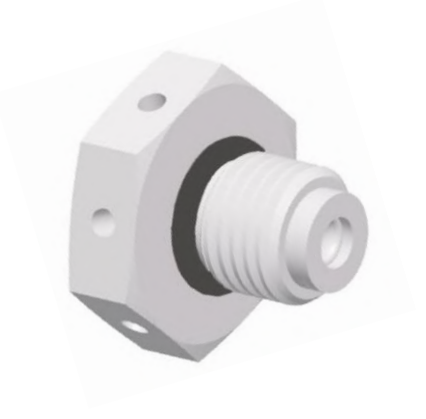

Ordering Information

Nominal Burst Pressure at 70°F (20°C)	Ordering Number
2850 psig ± 150 psig 196 bar ± 10.3 bar	SS-RDD-7BS-2850
1900 psig ± 100 psig 130 bar ± 6.8 bar	SS-RDD-7BS-1900

Note: The rupture disc kits should be used with FITOK Rupture Disc Tees.

Rupture Disc Tees

These compact assemblies are designed for using with FITOK valves. Tees are made of 316 SS. Each tee is supplied with a rupture disc kit.

Ordering Information and Dimensions

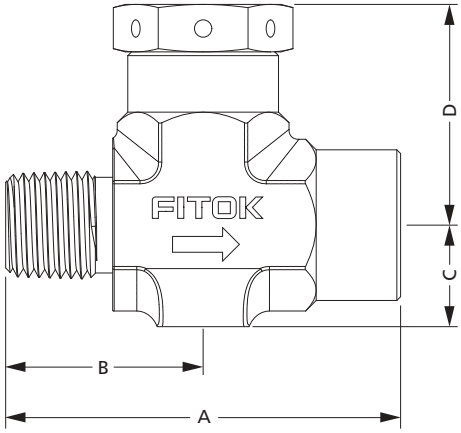

End Connections		Ordering Number	Dimensions, in. (mm)			
Inlet	Outlet		A	B	C	D
With 2850 psig (196 bar) Rupture Disc						
1/4 in. Male NPT	1/4 in. Female NPT	SS-TM4-F4-RD28	2.06 (52.4)	1.03 (26.2)	0.53 (13.5)	1.16 (29.4)
1/2 in. Male NPT		SS-TM8-F4-RD28	2.63 (66.7)	1.50 (38.1)	0.75 (19)	1.42 (36)
With 1900 psig (130 bar) Rupture Disc						
1/4 in. Male NPT	1/4 in. Female NPT	SS-TM4-F4-RD19	2.06 (52.4)	1.03 (26.2)	0.53 (13.5)	1.16 (29.4)
1/2 in. Male NPT		SS-TM8-F4-RD19	2.63 (66.7)	1.50 (38.1)	0.75 (19)	1.42 (36)



Nonrotating-stem Needle Valves with Rupture Disc Kits

Ordering Information and Dimensions

End Connections		Flow Pattern	Valve Ordering Number	Orifice in. (mm)
Inlet	Outlet			
With 2850 psig (196 bar) Rupture Disc				
1/4 in. Male NPT	1/4 in. Female NPT	Straight	NDSS-NS4-FNS4-7-SAFE2	0.16 (4.0)
		Angle	NDSS-NS4-FNS4-7-A-SAFE2	
1/2 in. Male NPT			NDSS-NS8-FNS4-8-A-SAFE2	0.22 (5.6)
With 1900 psig (130 bar) Rupture Disc				
1/4 in. Male NPT	1/4 in. Female NPT	Straight	NDSS-NS4-FNS4-7-SAFE1	0.16 (4.0)
		Angle	NDSS-NS4-FNS4-7-A-SAFE1	
1/2 in. Male NPT			NDSS-NS8-FNS4-8-A-SAFE1	0.22 (5.6)

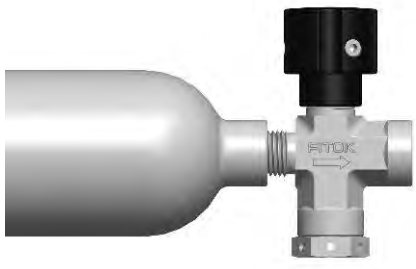

1. Dimensions are for reference only and are subject to change.
2. Other FITOK valves are available for using with sample cylinders. Please contact FITOK Group or our authorized distributors for details.

Spring Relief Devices



Features

◎ Spring relief devices can be used with FITOK sample cylinders as a safety device

◎ When the system pressure reaches the set pressure, the device will open automatically to release the excess pressure in the system. After stabilizing the system pressure, the device will close automatically.

◎ Working Temperature: -20°F~250°F (-29°C~121°C)

Materials of Construction

Item	Component	Material Grade/ASTM Specification
1	Body	316 SS/A182
2	Gasket	PCTFE/D1430
3	Seat	316 SS/A479
4	Stem	316 SS/A479+Fluorocarbon FKM
5	Spring	304 SS/A313
6	Bonnet	316 SS/A479

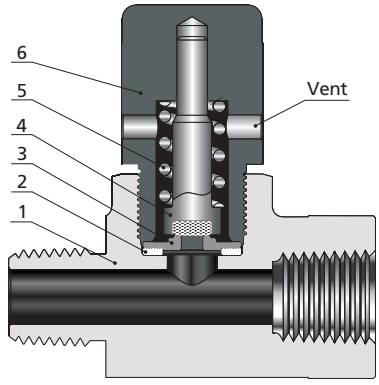

1. Lubricant: Silicone-based.
2. For other materials, please contact FITOK Group or our authorized distributors.

Dimensions and Ordering Information

All dimensions are for reference only and are subject to change.

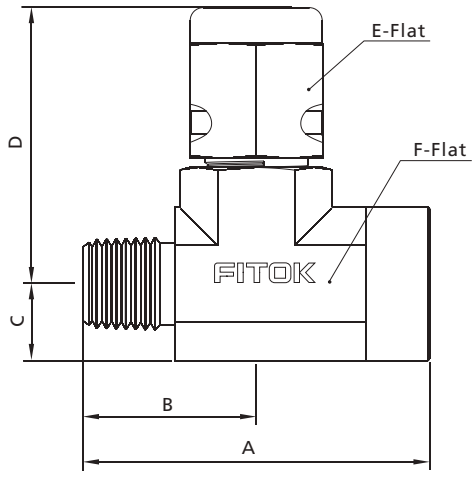

Basic Ordering Number	Connection Type and Size		Dimensions, in. (mm)						Set Pressure Range psig (bar)
	Inlet	Outlet	A	B	C	D	E	F	
RTSS-NS4-FNS4-4	1 /4 Male NPT	1 /4 Female NPT	2.11 (53.6)	1.05 (26.8)	0.46 (11.7)	1.68 (42.7)	0.81 (20.6)	0.81 (20.6)	350 ~ 400 (24~27)
RTSS-NS4-FNS4-6									540 ~ 600 (37~41)
RTSS-NS4-FNS4-8									700 ~ 800 (48~55)
RTSS-NS6-FNS4-4	3 /8 Male NPT								350 ~ 400 (24~27)
RTSS-NS6-FNS4-6									540 ~ 600 (37~41)
RTSS-NS6-FNS4-8									700 ~ 800 (48~55)

① Set pressure is in the middle of the set pressure range.

② For other set pressures, please contact FITOK Group or our authorized distributors.

Outage Tubes

Features

- 316 SS and Alloy 400 available
- 1/4'' and 1/2'' NPT connections available

Construction

Outage tube is welded to the male thread end of an adapter. Screw the adapter with outage tube into the female thread end of a sample cylinder.

Purpose

The outage tube provides a vapor space of desired volume in a cylinder with liquefied gas. Therefore, liquids can expand when the temperature increases. A small temperature increase can make the liquids expanded and the pressure increased dramatically if there is not enough vapor space.

Note: For safe filling limits of your application, please refer to local regulations or other guidelines.

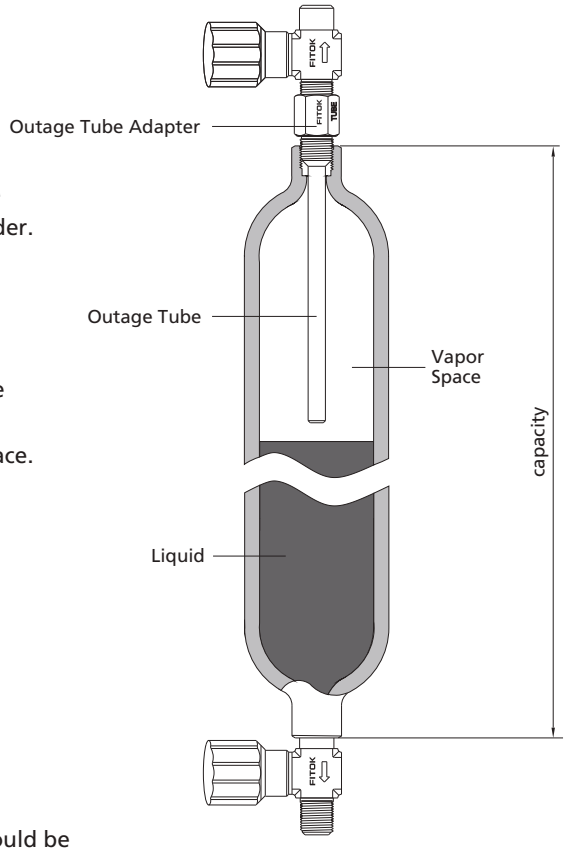

Usage

Outage tube is used to keep a certain vapor space in a cylinder.
The space is determined by the length of outage tube.
Outage is the vapor space in the cylinder expressed as a percentage of the total volume of the cylinder.

% outage = (vapor space/total volume) × 100

To obtain an exact outage, each outage tube and cylinder assembly should be calibrated by a suitable method.

Outage Tube Length

The outage tube length (L) is measured from the end of the pipe fitting to the end of the tubing. The table below shows approximate outage tube length for standard sample cylinders.

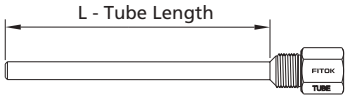

Standard Outage Tube

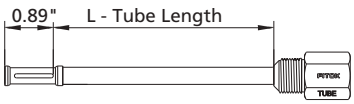

Strainer Type Outage Tube

Tube O.D.	Cylinder Volume (cm^3±10%)	Code		Minimum Outage, %				
				10	20	30	40	50
				Tube Length, in.				
1/4"	40	Applicable to double-ended cylinders rated to 1800 psig	4087	0.87	1.11	1.35	1.59	1.84
5/16"	50		5085	0.85	1.07	1.28	1.50	1.71
	75		5102	1.02	1.34	1.66	1.98	2.31
	150		5112	1.12	1.45	1.79	2.13	2.46
	300		5165	1.65	2.32	2.99	3.67	4.34
	400		5200	2.00	2.90	3.79	4.69	5.59
	500		5226	2.26	3.38	4.50	5.62	6.74
	1000		5231	2.31	3.06	3.81	4.56	5.31
	2250		5717	3.30	4.59	5.88	7.17	8.46
	3785 (1 gal)		51114	4.62	6.79	8.96	11.14	13.31
1/2"	1000		8221	2.21	2.96	3.71	4.46	5.21
	2250		8846	3.30	4.59	5.88	7.17	8.46
	3785 (1 gal)		8452	4.52	6.69	8.86	11.04	13.21
5/16"	150	Applicable to single-ended cylinders rated to 500 psig	5109	1.09	1.43	1.77	2.12	2.46
	300		5159	1.59	2.27	2.96	3.65	4.34
	500		5560	2.16	3.30	4.45	5.60	6.74
	150	Applicable to double-ended cylinders rated to 5000 psig	5162	1.62	2.17	2.71	3.26	3.81
	300		5274	2.74	3.84	4.93	6.03	7.12
	500		5439	4.39	6.21	8.04	9.86	11.68

For the use of sample cylinder and outage tube, please refer to ASTM D1265, Standard Practice for Sampling Liquefied Petroleum (LP) Gases, Manual Method.

Ordering Number Description

6L - OT5226 - NS4 - FNS4 - ST5 - SI

Material		Tube O.D.		Tube Length	Male Thread Connection		Female Thread Connection		Element Nominal Pore Size		Special Application	
6L	316L SS	OT4	1/4 in.	A percentage of inch, specified by the customers (eg:226 means the tube length is 2.26 inch.)	NS4	1/4 NPT	FNS4	1/4 NPT		None		No
4L	304L SS	OT5	5/16 in.		NS8	1/2 NPT			ST2	2 µm	SI	SilcoNert® 2000 (Sulfinert®) Coating (Not available for strainer type)
M	Alloy 400	OT8	1/2 in.						ST5	5 µm		
									ST7	7 µm		
									ST15	15 µm		
									ST40	40 µm		
									ST60	60 µm		
									ST80	80 µm		

Note: "Ordering Number Description" is a reference to understand the combination rules of FITOK product part number. Not all combinations are available. The strainer type outage tube is available only in 316L stainless steel.

Accessories

Carrying Handle

The carrying handle provides convenience for transportation of sample cylinders. The handle is made of 304 SS and is available for 290 cm cylinders or larger cylinders.

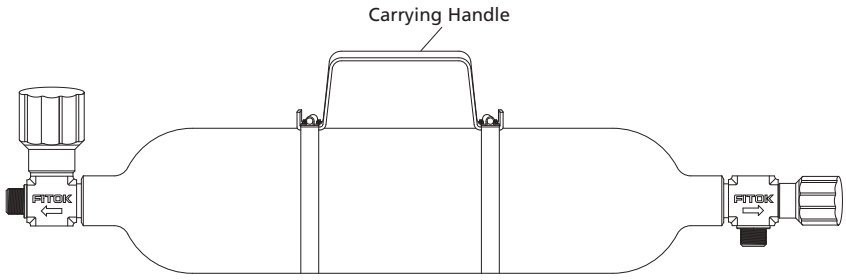

Ordering Information

Cylinder O.D. in. (mm)	Cylinder Volume cm^3	Ordering Number
1.9 (48.2)	290~500	HD-CY2-H2
2.0 (50.8)		
3.5 (88.9)	1000	HD-CY3-H2
4.0 (102)	2250/3785	HD-CY4-H4

Caps and Plugs

Caps and plugs are used for cylinder valves to protect the connections (tube fitting or NPT thread) from damages during cylinder transportation. For details, please contact FITOK Group or our authorized distributors.

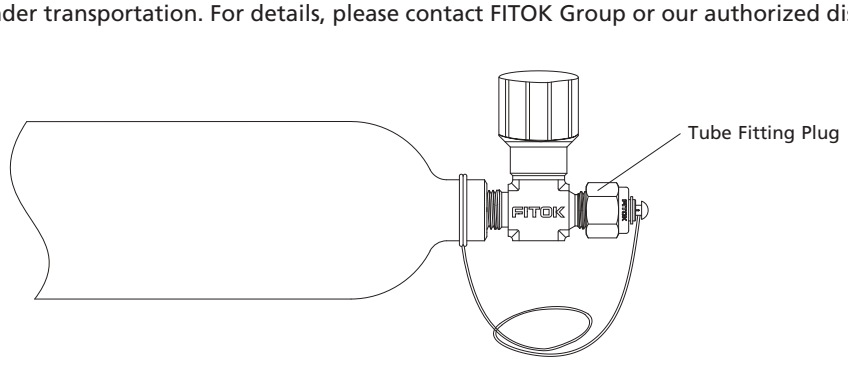

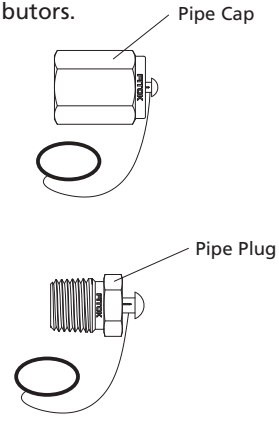

End Caps

In order to enable users to transport pressurized samples in safety, end caps are offered by FITOK to protect valves from damages. Each end cap is screwed onto a neck ring that has been cold forged to the cylinder neck. End caps are made of carbon steel and are only available for 2250 cm^3 and 3785 cm^3 (1 gal) cylinders . FITOK angle pattern valves can be used for cylinders with end caps.





Ordering Number Description

6L - SC18 - DN4 - T - EC - H2 - OT4087 - 300 - DOT - DCR1S - F2 - SI

Cylinder Material

6L	316L SS
4L	304L SS
M	Alloy 400

Series

SC

Working Pressure

5	500 psig
18	1800 psig
50	5000 psig

Cylinder Configuration

S	Single-ended
D	Double-ended

End Connection

N2	1/8 Female NPT
N4	1/4 Female NPT
N8	1/2 Female NPT

Internal Surface

	Sandblasting
T	PTFE Coating
E	Electropolishing

Cap & Plug

	No
EC	End Cap

Carrying Handle

	No
H2	Cylinder O.D. 1.9" to 3.5"
H4	Cylinder O.D. 4"

Outage Tube

	No
OT4087	For outage tube specifications, please refer to Ordering Number Description on Page E-19
OT5226	
OT8846	
.....	

Cylinder Volume

150	150 cm^3
300	300 cm^3
500	500 cm^3
40	40 cm^3
50	50 cm^3
75	75 cm^3
290	290 cm^3
400	400 cm^3
1000	1000 cm^3
2250	2250 cm^3
3785	3785 cm^3

For Double-ended Only

Approval

	No
DOT	DOT Approval

Sampling Assembly Accessory (For Double-ended Only) ①

	No
P	One end with rupture disc tee (1900 psig)
Q	One end with rupture disc tee (2850 psig)
D	Double-end ND series needle valves with male thread
E	Double-end ND series needle valves with female thread
B	Double-end ND series needle valves with female thread (1900 psig single-end rupture disc tee)
G	Double-end ND series needle valves with female thread (2850 psig single-end rupture disc tee)
C	Double-end QC series quick-connects (stem+ body)
R	Quick-connect protector

Accessory Material

	No
1	316 SS
1S	316 SS NACE MR0175
2	Same as cylinder
2S	Same as cylinder NACE MR0175

Cleaning and Packaging

	FC-01
F2	FC-02

Special Application

	No
SI	SilcoNert® 2000 (Sulfinert®) Coating

① When there are multiple accessory options, fill in the part number in sequence.
Note: "Ordering Number Description" is a reference to understand the combination rules of FITOK product part number. Not all combinations are available.

Miniature Sample Cylinders

Features

- Maximum working pressure: 1000 psig (69.0 bar)
- Capacities: 10, 25 and 50 cm^3
- Single-ended and double-ended configurations available
- Smooth internal neck transition for easy cleaning
- Stainless steel construction to ensure high corrosion resistance
- Full-penetration butt weld constructions

Dimensions

Dimensions, in inches (millimeters), are for reference only and are subject to change.

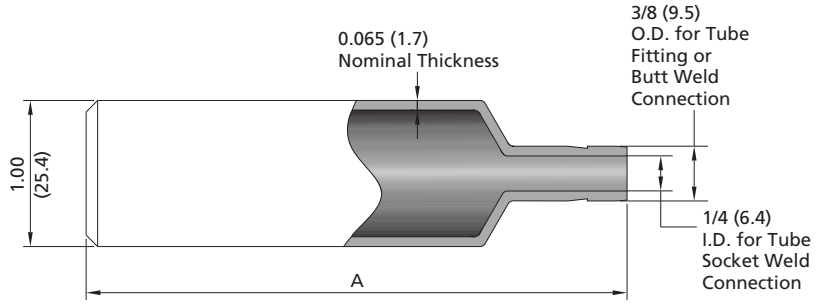

Cylinder Configuration	Cylinder Volume cm^3	Volume Tolerance	Working Pressure psig (bar)	A in. (mm)	Average Weight oz (g)
Single-ended	10	±10%	1000 (69.0)	2.19 (55.6)	2.2 (62)
	25	±5%		3.69 (93.7)	3.2 (91)
	50			6.25 (159)	5.6 (159)
Double-ended	10	±10%		2.75 (69.8)	1.9 (54)
	25	±5%		4.25 (108)	3.3 (94)
	50			6.81 (173)	5.1 (145)

Testing and Cleaning

Each miniature cylinder is pressure tested at 1667 psig (115 bar) with Nitrogen.
Special Cleaning and Packaging in compliance with ASTM G93 Level C is optional.

Special Application Sample Cylinder

SilcoNert® 2000 (Sulfinert®) coated sample cylinders available, SilcoNert® 2000 (Sulfinert®) coating to provide stable storage of sulfur and mercury compounds at ppb levels in petroleum samples for a long time.
SilcoNert® 2000 (Sulfinert®) coating not flaking off and more durable than Teflon coating.
To order SilcoNert® 2000 (Sulfinert®) coated products, please add -SI as a suffix to the standard ordering number.
Example: 6L-SC18-DN4-H2-500-SI

Cautions

1. No impingement during the usage of the cylinders.
2. Don't expose the cylinders in the sun or bake next to the heat source.
3. Sample cylinders are strictly prohibited roasting by fire when the cylinders are frozen.
4. When using the sample cylinders, the working pressure should not exceed its maximum allowable working pressure.

Ordering Number Description

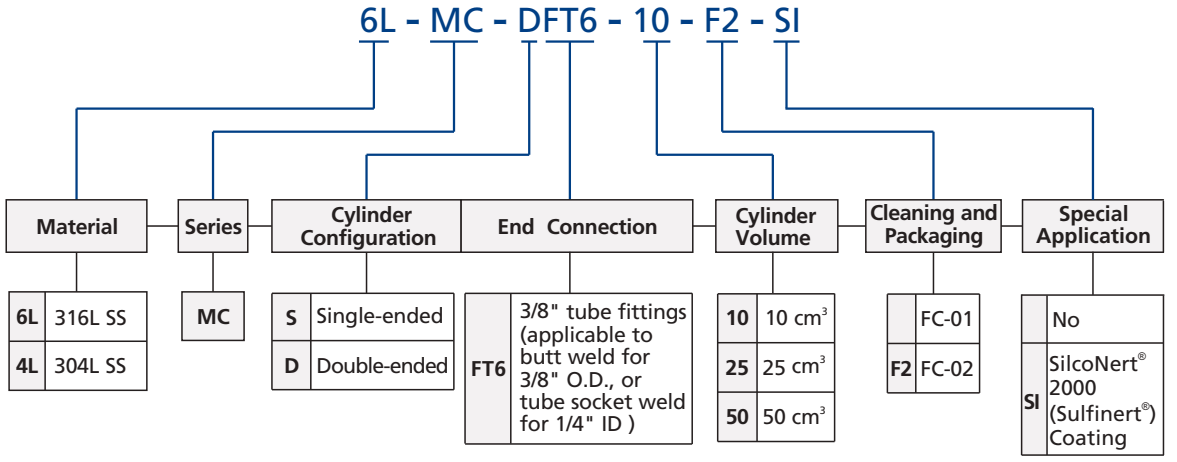

Sample Cylinders Compliant with the Transportable Pressure Equipment Directive (TPED)



Application

- Hydrocarbon sampling for refineries
- Gas sampling for chromatography experiments
- Condensate sampling for fossil fuel power plants and nuclear power plants
- As surge accumulators or reaction vessels
- Snubbers in reactor feed lines

Features

- Volumes from 40 to 3785 cm^3 (1 gal)
- 1/8", 1/4" and 1/2" female NPT connections
- Spun cylinder body machined from seamless tubing to provide consistent wall thickness, size and capacity
- Cold-formed female NPT threads to provide high strength
- All models internally sandblasted to ensure smooth surface without foreign particles
- 304L SS and 316L SS available
- Cylinders compliant with Transportable Pressure Equipment Directive 2010/35/EU

Technical Data

Dimensions are for reference only and are subject to change.

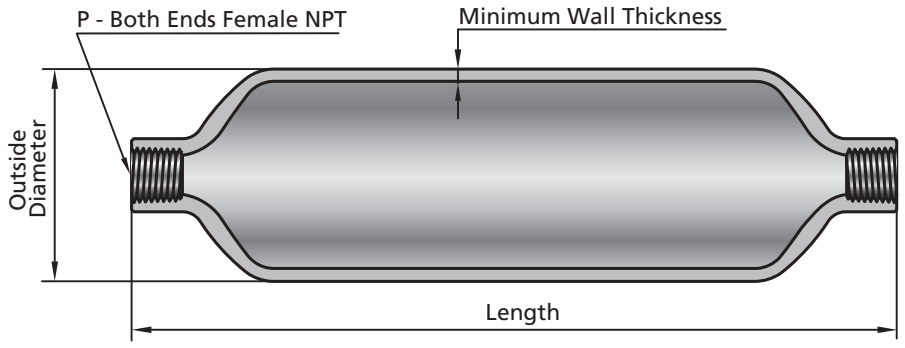

Basic Ordering No.	Pressure Rating at -58 to 122 °F (-50 to 50 °C) psig (bar)	Internal Volume (cm^3 ±10%)	P - Female NPT	Dimensions, in. (mm)			Weight lb (kg)
				Outside Diameter	Length	Minimum Wall Thickness	
4L-SC13-N2-40	1885 (130)	40	1/8"	1.25 (31.80)	3.88 (98.60)	0.070 (1.80)	0.31 (0.14)
4L-SC13-N4-50		50	1/4"	1.50 (38.10)	3.75 (95.20)	0.093 (2.40)	0.38 (0.17)
4L-SC13-N4-75		75			4.94 (125.00)		0.62 (0.28)
4L-SC10-N4-150	1450 (100)	150		2.00 (50.80)	5.25 (133.00)		0.94 (0.43)
4L-SC10-N4-300		300			8.94 (227.00)		1.80 (0.83)
4L-SC10-N4-400		400			11.40 (290.00)		2.10 (0.95)
4L-SC10-N4-500		500			13.80 (351.00)		2.61 (1.20)
4L-SC10-N4(8)-1000		1000	1/4" or 1/2"	3.50 (88.90)	10.90 (277.00)	0.180 (4.60)	6.50 (2.90)
4L-SC10-N4(8)-2250		2250		4.00 (102,00)	17.20 (437.00)	0.206 (5.20)	14.00 (6.40)
4L-SC10-N4(8)-3785		3785			26.70 (678.00)		21.00 (9.50)
6L-SC10-N4-300	1450 (100)	300	1/4"	2.00 (50.80)	8.94 (227.00)	0.093 (2.40)	1.80 (0.83)
6L-SC10-N4-500		500			13.80 (351.00)		2.61 (1.20)
6L-SC10-N4(8)-1000		1000	1/4" or 1/2"	3.50 (88.90)	10.90 (277.00)	0.180 (4.60)	6.50 (2.90)
6L-SC30-N4-150	4350 (300)	150	1/4"	1.90 (48.20)	8.00 (203.00)	0.240 (6.10)	3.00 (1.40)
6L-SC30-N4-300		300			14.50 (368.00)		5.60 (2.50)
6L-SC30-N4-500		500			23.50 (597.00)		9.10 (4.10)

Options of Internal Surface Treatments

PTFE Coating

The cylinder internal surface can be coated with PTFE to provide nonstick surface for easy cleaning.

Electropolishing

Electropolishing can provide a clean internal surface with a high degree of passivation.

Testing

Each TPED-compliant sample cylinder is hydrostatically tested at 1.5 times the working pressure.

Cleaning and Packaging

All FITOK TPED-compliant sample cylinders are cleaned and packaged in accordance with FITOK *FC-01 Standard Cleaning and Packaging*.

FITOK FC-02 Special Cleaning and Packaging compliant with the requirements of ASTM G93 Level C is optional.

Special Application Sample Cylinder

SilcoNert® 2000 (Sulfinert®) coated sample cylinders available, SilcoNert® 2000 (Sulfinert®) coating to provide stable storage of sulfur and mercury compounds at ppb levels in petroleum samples for a long time.
SilcoNert® 2000 (Sulfinert®) coating not flaking off and more durable than Teflon coating.
To order SilcoNert® 2000 (Sulfinert®) coated products, please add -SI as a suffix to the standard ordering number.
Example: 6L-SC10-N4-H2-300-SI

Sample Cylinder Accessories

Carrying Handle

The carrying handle provides convenience for transportation of sample cylinders. The handle is made of 304 SS and is available for 300 cm^3 cylinders or larger cylinders.

Ordering Information

Outside Diameter in. (mm)	Internal Volume cm^3	Basic Ordering No.
1.9 (48.2)	300~500	HD-CY2-H2
2.0 (50.8)		
3.5 (88.9)	1000	HD-CY3-H2
4.0 (102)	2250/3785	HD-CY4-H4

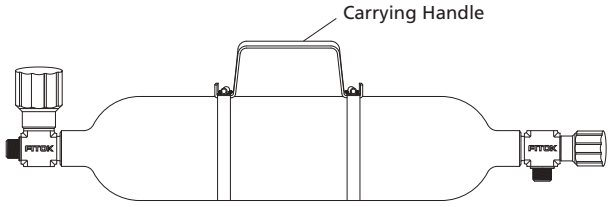

Caps and Plugs

Caps and plugs are used for cylinder valves to protect the connections (tube fitting or NPT thread) from damages during cylinder transportation. For details, please contact FITOK Group or our authorized distributors.

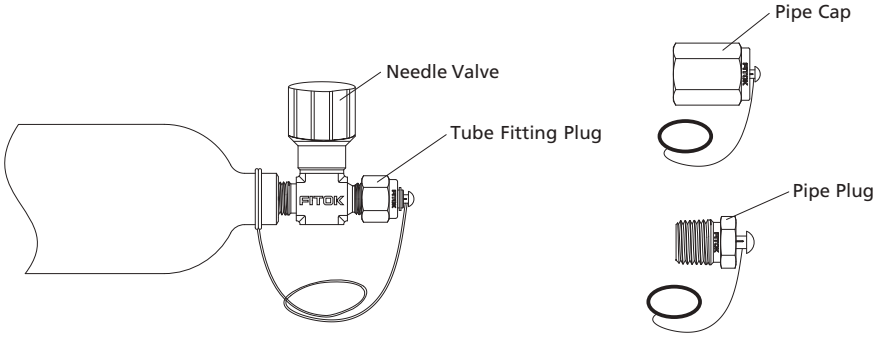

Ordering Number Description

6L -SC10 - N4 - T - H2 - OT4117 - 300 - F2 - SI

Material	Series	Working Pressure	End Connection	Internal Surface	Carrying Handle	Outage Tube Code	Internal Volume	Cleaning and Packaging	Special Application
6L 316L SS 4L 304L SS	SC	10 100 bar 13 130 bar 30 300 bar	N2 1/8 Female NPT N4 1/4 Female NPT N8 1/2 Female NPT	(blank) Sandblasting T PTFE Coating E Electropolishing	(blank) No H2 Cylinder O.D. 1.9" to 3.5" H4 Cylinder O.D. 4"	(blank) No OT4117① Outage Tube O.D. 1/4". Length 1.17"	40 40 cm³ 50 50 cm³ 75 75 cm³ 150 150 cm³ 300 300 cm³ 400 400 cm³ 500 500 cm³ 1000 1000 cm³ 2250 2250 cm³ 3785 3785 cm³	(blank) FC-01 F2 FC-02	(blank) No SI SilcoNert® 2000 (Sulfinert®) Coating

① For other outage tube codes, please refer to Page E-18 for details, the ordering number of sample cylinder with outage tube suffixed with -SI means the outage tube is also SilcoNert® 2000 (Sulfinert®) coated.

Note: "Ordering Number Description" is a reference to understand the combination rules of FITOK product part number. Not all combinations are available.
If you have any question, please contact FITOK Group or our authorized distributors.

Tubing, Tools and Accessories

Tubing  F-02

Tools and Accessories  F-18

Syphons  F-26

Tubing



Contents

Tubing Selection F-04

Tubing Handling F-05

Gas Service F-05

Tubing Installation F-06

Types of Tubing F-06

Suggested Allowable Working Pressure for Tubing

Stainless Steel Tubing F-07

S31254 Tubing F-08

Super Duplex 2507 Tubing F-09

Alloy 400 Tubing F-10

Alloy 20 Tubing F-11

Alloy 600 Tubing F-11

Alloy 625 Tubing F-12

Alloy 825 Tubing F-12

Alloy C-276 Tubing F-13

Copper Tubing F-13

Grade 2 Titanium Tubing F-14

Pressure Ratings at Elevated Temperatures F-15

Basic Ordering Number F-16

Ordering Number Description F-17

Tubing Selection

Proper selection, handling, and installation of tubing, when combined with proper selection of FITOK tube fittings, are essential for reliable tubing systems.

The following variables should be considered when ordering tubing for use with FITOK tube fittings:

◎ Material
◎ Hardness
◎ Wall thickness
◎ Surface finish

Material

Our suggested ordering instructions for each type of tubing are shown under the respective tables.

Hardness

The key to selecting proper tubing for use with metal FITOK tube fittings is that the tubing must be softer than the fitting material. FITOK tube fittings are designed to work properly with the tubing that is suggested in the ordering instructions.

Composition and Properties

UNS	Grade	ASTM Standard	FITOK Designator	Composition %							Mechanical Properties			
				C ⩽	Cr	Ni	Mo	Cu	Ti	Others	Yield Strength MPa ⩾	Tensile Strength MPa ⩾	Elongation % ⩾	Hardness ⩽
S31600/ S31603	316/316L	A269	SS	0.035①	16-18	10-14	2.0-3.0	-	-	-	205	515	35	80 HRB
Enhanced-S31600/ S31603	Enhanced-316/316L		SH		17-18	12-14	2.6-3.0							
S30400/ S30403	304/304L		S4		18-20	8-11	-							
S31254	6Mo	A269	S12	0.02	19.5-20.5	17.5-18.5	6.0-6.5	-	-	-	310	675	35	96 HRB
S32750	2507	A789	D7	0.03	24-26	6-8	3.0-5.0	⩽0.5	-	N	550	800	15	32 HRC
N04400	Alloy 400	B165	M	0.30	-	⩾63	-	28.0-34.0	-	-	195	480	35	75 HRB
N08020	Alloy 20	B729	A20	0.07	19-21	32-38	2.0-3.0	3.0-4.0	-	Nb, Ta	240	550	30	95 HRB
N06600	Alloy 600	B167	INC	0.15	14-17	⩾72	-	⩽0.5	-	-	205	550	35	92 HRB
N06625	Alloy 625	B444	A65	0.10	20-23	⩾58	8.0-10.0	-	0.4	Cb,Ta	414	827	30	25 HRC
N08825	Alloy 825	B163	A85	0.05	19.5-23.5	38-46	2.5-3.5	1.5-3.0	1.6-1.2	-	241	586	30	90 HRB
N10276	Alloy C-276	B622	HC	0.01	14.5-16.5	BAL	15.0-17.0	-	-	W	283	690	40	100 HRB
C12200	C12200	B75	CU	-	-	-	-	⩾99.90	-	P	62	205	-	-
R50400	Ti Gr2	B338	TI2	0.08	-	-	-	-	BAL	-	275-450	345	20	-

① The carbon content of tubing with outside diameter smaller than 1/2" or wall thickness smaller than 0.049" is allowed up to 0.04%.

Wall Thickness

The accompanying tables show working pressure of tubing in a wide range of wall thicknesses. Allowable working pressures are calculated from S values as specified by ASME B31.3, Process Piping. FITOK tube fittings have been repeatedly tested in both the minimum and maximum wall thicknesses shown. FITOK tube fittings are not recommended for tube wall thicknesses outside the ranges shown in the accompanying tables for each size.

Tubing Surface Finish

Many ASTM specifications cover the above requirements, but they often are not very detailed on surface finish. For example, ASTM A450, a general tubing specification, it is specified as below:
12. Straightness and Finish
12.1 Finished tubes shall be reasonably straight and have smooth ends free of burrs. They shall have a workmanlike finish. Surface imperfections (Note) may be removed by grinding, provided that a smooth curved surface is maintained, and the wall thickness is not decreased to less than that permitted by this or the product specification. The outside diameter at the point of grinding may be reduced by the amount so removed.
A good finish of FITOK tubing is guaranteed by the mechanically polished external surface and scale-free internal surface.
Note: An imperfection is any discontinuity or irregularity found in the tube.

Tubing Handling

It is important to properly handle the tubing in order to reduce the scratches and protect the surface finish.
◎ Tubing should never be dragged out of a tubing rack or across a rough surface.
◎ Tube cutters or hacksaws should be sharp. Do not take deep cuts with each turn of the cutter or stroke of the saw.
◎ Removing burrs on the tube end which will be helpful for the tubing to go through the ferrules without damaging the ferrule sealing edge.

Gas Service

Gases (air, hydrogen, helium, nitrogen, etc.) have very small molecules that can escape through even the most minute leak path. Some surface defects on the tubing can provide such a leak path. As tube outside diameter (O.D.) increases, so does the likelihood of a scratch or other surface defect interfering with proper sealing.
The most successful connection for gas service will occur if all installation instructions are carefully followed and the heavier wall thicknesses of tubing on the accompanying tables are selected.
A heavy-wall tube resists ferrule action more than a thin-wall tube, allowing the ferrules to coin out minor surface imperfections and grip the tube more firmly. Within the applicable suggested allowable working pressure table, select a tube wall thickness whose working pressure is outside of the shaded areas.

Tubing Installation

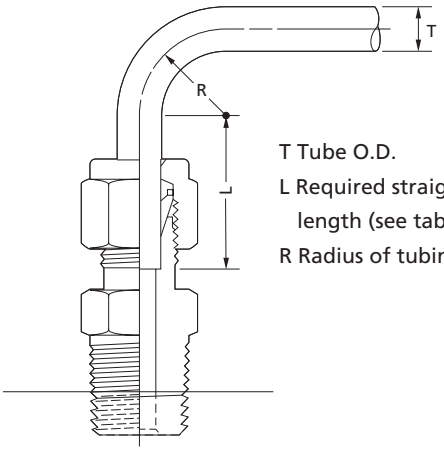

T Tube O.D.
L Required straight tube length (see tables)
R Radius of tubing bend

Tubing properly selected and handled, combined with properly installed FITOK tube fittings, will give you a leaktight system and provide reliable service in a wide variety of applications.
When installing fittings near tube bends, there must be a sufficient straight length of tubing to allow the tubing to be bottomed in the FITOK fitting (see tables). For maximum assurance of reliable performance, FITOK tube fittings shall be assembled in accordance with catalog instructions, and use properly selected and handled high-quality tubing——such as provided by FITOK.

Fractional, in.	
T Tube O.D.	L①
1/16	1/2
1/8	23/32
3/16	3/4
1/4	13/16
5/16	7/8
3/8	15/16
1/2	1 3/16
5/8	1 1/4
3/4	
7/8	1 5/16
1	1 1/2
1 1/4	2
1 1/2	2 13/32
2	3 1/4

① Required straight tube length.

Metric, mm	
T Tube O.D.	L①
3	19
6	21
8	23
10	25
12	31
14	32
15	
16	
18	
20	34
22	
25	40
28	46
30	50
32	54
38	63
50	80

Hydraulic Presetting Tools

A FITOK hydraulic presetting tool must be used to install FITOK tube fittings over 1 in. (25 mm). For tube fittings in 1 1/4, 1 1/2, and 2 in. (28, 30, 32, 38, and 50 mm), a presetting tool can be used to preset ferrules onto the tubing tightly. For more information about installation instructions, please contact FITOK or our authorized distributors.

Types of Tubing

Available in TMP series and TCT series. Materials include austenitic stainless steel, super duplex stainless steel, Nickel-based alloys and etc.
Enhanced-316/316L SS material is also available, with Ni, Cr and Mo contents in close approximation to upper values specified in ASTM standard. Enhanced-316/316L SS tubing has better pitting corrosion resistance.

- ◎ TMP series seamless straight-length tubing, pickled, or bright annealed or cold rolled followed by bright annealing, external surface mechanically polished
- ◎ TCT series seamless coiled tubing, bright annealed, external surface mechanically polished

Suggested Allowable Working Pressure for Tubing

Figures and tables are for reference only. No implication is made that these values can be used for design work. Applicable codes and practices in industry should be considered. ASME Codes are the successor to and replacement of ASA Piping Codes.

- ◎ All pressures are calculated from equations in ASME B31.3, Process Piping. See factors for calculating working pressures in accordance with ASME B31.1, Power Piping.
- ◎ Calculations are based on maximum O.D. and minimum wall thickness, except as noted in individual tables.
  Example: ˝ in. O.D.×0.035 in. wall thickness stainless steel tubing according to ASTM A269:
  O.D. Tolerance ±0.005 in. / Wall Thickness Tolerance ±10%
  Calculations are based on 0.505 in.O.D.×0.0315 in. wall thickness tubing.
- ◎ No allowance is made for corrosion or erosion.

Stainless Steel Tubing

Table 1 — Fractional Seamless Tubing

Allowable working pressures are calculated from an S value of 20 000 psig (137.8 MPa) for ASTM A269 tubing at -20 to 100°F (-28 to 37°C), as listed in ASME B31.3 and ASME B31.1.

For Welded Tubing

For welded and drawn tubing, a derating factor must be applied for weld integrity:

- ◎ For double-welded tubing, multiply working pressure by 0.85.
- ◎ For single-welded tubing, multiply working pressure by 0.80.

Tube O.D. (in.)	Tube Wall Thickness, in.															
	0.010	0.012	0.014	0.016	0.020	0.028	0.035	0.049	0.065	0.083	0.095	0.109	0.120	0.134	0.156	0.188
	Working Pressure, psig															
1/16	5600	6800	8100	9400	12000											
1/8						8500	10900									
3/16						5400	7000	10200								
1/4						4000	5100	7500	10200							
5/16							4000	5800	8000							
3/8							3300	4800	6500	7500						
1/2							2600	3700	5100	6700						
5/8								2900	4000	5200	6000					
3/4								2400	3300	4200	4900	5800				
7/8								2000	2800	3600	4200	4800				
1									2400	3100	3600	4200	4700			
1 1/4										2400	2800	3300	3600	4100	4900	
1 1/2											2300	2700	3000	3400	4000	4900
2												2000	2200	2500	2900	3600

Note: For gas service, select a tube thickness outside of the shaded area.

Table 2—Metric Seamless Tubing

Tube O.D. (mm)	Tube Wall Thickness, mm													
	0.8	1.0	1.2	1.5	1.8	2.0	2.2	2.5	2.8	3.0	3.5	4.0	4.5	5.0
	Working Pressure, bar													
3	670													
6	310	420	540	710										
8		310	390	520										
10		240	300	400	510	580								
12		200	250	330	410	470								
14		160	200	270	340	380	430							
15		150	190	250	310	360	400							
16			170	230	290	330	370	400						
18			150	200	260	290	320	370						
20			140	180	230	260	290	330	380					
22			140	160	200	230	260	300	340					
25					180	200	230	260	290	320				
28						180	200	230	260	280	330			
30						170	180	210	240	260	310			
32						160	170	200	220	240	290	330		
38							140	160	190	200	240	270	310	
50										150	180	210	240	270

Note: For gas service, select a tube thickness outside of the shaded area.

Suggested Ordering Information

High-quality, fully annealed (Type 304/304L, 316/316L, Enhanced-316/316L) (seamless or welded and drawn) stainless steel hydraulic tubing, ASTM A269 or A213, or equivalent. Hardness not to exceed 80 HRB. Tubing to be free of scratches, suitable for bending and flaring.

Note: Certain austenitic stainless tubing has an allowable ovality tolerance double the O.D. tolerance and may not fit into FITOK precision tube fittings.

S31254 Tubing

Allowable working pressures are calculated from an S value of 27100 psig (186.8 MPa) for ASTM A269 tubing at -20 to 100°F (-28 to 37°C), as listed in ASME B 31.3 and ASME B31.1.

Table 3 — Fractional

Tube O.D. (in.)	Tube Wall Thickness, in.			
	0.028	0.035	0.049	0.065
	Working Pressure, psig			
1/4	5400	6900	10100	13900
3/8		4500	6500	8900
1/2		3500	5000	6900

Note: For gas service, select a tube thickness outside of the shaded area.

Table 4 — Metric

Tube O.D. (mm)	Tube Wall Thickness, mm				
	0.8	1	1.2	1.5	1.8
	Working Pressure, bar				
6	430	580	740	980	
8		420	530	710	
10		330	420	550	700
12		270	340	450	570

Note: For gas service, select a tube thickness outside of the shaded area.

Suggested Ordering Information

High-quality, fully annealed S31254 tubing, ASTM A269 or equivalent. Hardness not to exceed 96 HRB. Tubing to be free of scratches, suitable for bending and flaring. O.D. tolerances not to exceed ±0.005 in (±0.13 mm).

Super Duplex 2507 Tubing

Allowable working pressures are calculated from an S value of 38 700 psig (266.8 MPa) for ASTM A789 tubing at -20 to 100°F (-28 to 37°C), as listed in ASME B31.3.

Table 5 — Fractional

Tube O.D. (in.)	Tube Wall Thickness, in.				
	0.035	0.049	0.065	0.083	0.095
	Working Pressure, psig				
1/4	10000	15000			
3/8	6500	10100	12700		
1/2	5000	7200	10100	12900	
5/8		5800	7600	10100	
3/4		4700	6300	8500	10000

Note: For gas service, select a tube thickness outside of the shaded area.

Suggested Ordering Information

High-quality, fully annealed super duplex 2507 tubing, ASTM A789 or equivalent. Hardness not to exceed 32 HRC. Tubing to be free of scratches, suitable for bending and flaring.

Alloy 400 Tubing

Allowable working pressures are calculated from an S value of 18 700 psig (128.9 MPa) for ASTM B165 tubing at -20 to 100°F (-28 to 37°C), as listed in ASME B31.3 and ASME B31.1.

Table 6 — Fractional

Tube O.D. (in.)	Tube Wall Thickness, in.							
	0.028	0.035	0.049	0.065	0.083	0.095	0.109	0.120
	Working Pressure, psig							
1/8	7900	10100						
1/4	3700	4800	7000	9500				
5/16		3700	5400	7300				
3/8		3100	4400	6100				
1/2		2300	3200	4400				
3/4			2200	3000	4000	4600		
1				2200	2900	3400	3900	4300

Note: For gas service, select a tube thickness outside of the shaded area.

Table 7 — Metric

Tube O.D. (mm)	Tube Wall Thickness, mm									
	0.8	1.0	1.2	1.5	1.8	2.0	2.2	2.5	2.8	3.0
	Working Pressure, bar									
6	310	390	490	620						
8		290	350	450						
10		220	280	350						
12		180	230	290						
14		160	190	240	270					
18			150	200	240	270	300			
20				180	210	240	270	290		
25					170	190	210	240	270	290

Note: For gas service, select a tube thickness outside of the shaded area.

Suggested Ordering Information

High-quality, fully annealed seamless alloy 400 hydraulic tubing, ASTM B165 or equivalent. Hardness not to exceed 75 HRB. Tubing to be free of scratches, suitable for bending and flaring. O.D. tolerances not to exceed ±0.005 in (±0.13 mm).

Alloy 20 Tubing

Allowable working pressures are calculated from an S value of 20 000 psi (137.8 MPa) for ASTM B729 tubing at 20 to 100°F (-28 to 37°C), as listed in ASME B31.3 and ASME B31.1.

Table 8 — Fractional

Tube O.D. (in.)	Tube Wall Thickness, in.			
	0.028	0.035	0.049	0.065
	Working Pressure, psig			
1/4	4000	5100	7500	10200
3/8		3300	4800	6500
1/2		2600	3700	5100

Note: For gas service, select a tube thickness outside of the shaded area.

Table 9 — Metric

Tube O.D. (mm)	Tube Wall Thickness, mm			
	0.8	1.0	1.2	1.5
	Working Pressure, bar			
6	310	420	520	670
10		240	300	380
12		200	240	310

Note: For gas service, select a tube thickness outside of the shaded area.

Suggested Ordering Information

High-quality, fully annealed seamless or welded and drawn alloy 20 tubing, ASTM B729, B468 or equivalent. Hardness not to exceed 95 HRB. Tubing to be free of scratches, suitable for bending and flaring. O.D. tolerances not to exceed ±0.005 in (±0.13 mm).

Alloy 600 Tubing

Allowable working pressures are calculated from an S value of 20 000 psi (137.8 MPa) for ASTM B167 tubing at 20 to 100°F (-28 to 37°C), as listed in ASME B31.3 and ASME B31.1.

Table 10 — Fractional

Tube O.D. (in.)	Tube Wall Thickness, in.			
	0.028	0.035	0.049	0.065
	Working Pressure, psig			
1/4	4000	5100	7500	10200
3/8		3300	4800	6500
1/2		2600	3700	5100

Note: For gas service, select a tube thickness outside of the shaded area.

Table 11 — Metric

Tube O.D. (mm)	Tube Wall Thickness, mm			
	0.8	1.0	1.2	1.5
	Working Pressure, bar			
6	310	420	520	670
10		240	300	380
12		200	240	310

Note: For gas service, select a tube thickness outside of the shaded area.

Suggested Ordering Information

High-quality, fully annealed, cold drawn #1 temper alloy 600 seamless alloy tubing, ASTM B167 or equivalent. Hardness not to exceed 92 HRB. Tubing to be free of scratches, suitable for bending and flaring. Order to outside diameter and wall thickness only, not to inside diameter, average wall specification. O.D. tolerances not to exceed ±0.005 in (±0.13 mm).

Alloy 625 Tubing

Allowable working pressures are calculated from an S value of 26 700 psig (184.1 MPa) for ASTM B444 Grade 2 tubing at -20 to 100°F (-28 to 37°C) in accordance with ASME BPV 2007 Section II, Part D, Table 1B, tubing outside diameter and wall thickness tolerances from ASTM B444 for small-diameter tube.

Table 12 — Fractional

Tube O.D. (in.)	Tube Wall Thickness, in.		
	0.035	0.049	0.065
	Working Pressure, psig		
1/4	7300	10700	14600
3/8	4700	6800	9400
1/2	3500	5000	6800

Table 13 — Metric

Tube O.D. (mm)	Tube Wall Thickness, mm				
	0.8	1.0	1.2	1.5	1.8
	Working Pressure, bar				
6	470	610	750		
10		350	430	550	
12		290	350	450	550

Suggested Ordering Information

High-quality, fully annealed seamless alloy 625 tubing, ASTM B444, Grade 2 or equivalent. Hardness not to exceed 25 HRC. Tubing to be free of scratches, suitable for bending and flaring.

Note: For sizes not listed in the tables above, we recommend that a sample of the tubing and all pertinent information relating to system parameters be provided for evaluation before installation. Give tubing sample and system information to any of authorized FITOK distributors to forward to the factory.

Alloy 825 Tubing

Allowable working pressures are calculated from an S value of 23 300 psi (160.6 MPa) for ASTM B704 tubing at 20 to 100°F (-28 to 37°C), as listed in ASME B31.3 or ASME BPV 2007 Section II, Part D, Table 1B.

Table 14 — Fractional

Tube O.D. (in.)	Tube Wall Thickness, in.		
	0.035	0.049	0.065
	Working Pressure, psig		
1/4	6400	9300	11 600
3/8	4100	5900	8 200
1/2	3000	4300	5 900

Table 15 — Metric

Tube O.D. (in.)	Tube Wall Thickness, mm				
	0.8	1.0	1.2	1.5	1.8
	Working Pressure, bar				
6	410	530	660		
10		300	370	480	
12		250	300	390	480

Suggested Ordering Information

High-quality, fully annealed seamless alloy 825 tubing, ASTM B163, or equivalent. Fully annealed welded alloy 825 tubing, ASTM B704, class 1 or equivalent. Hardness not to exceed 90 HRB. Tubing to be free of scratches, suitable for bending and flaring. Wall thickness tolerances not to exceed ±10%.

Alloy C-276 Tubing

Allowable working pressures are calculated from an S value of 20 000 psi (137.8 MPa) for ASTM B622 tubing at 20 to 100°F (-28 to 37°C), as listed in ASME B31.3 and ASME B31.1.

Table 16 — Fractional

Tube O.D. (in.)	Tube Wall Thickness, in.			
	0.028	0.035	0.049	0.065
	Working Pressure, psig			
1/4	4000	5100	7500	10200
5/16		4000	5800	7800
3/8		3300	4800	6500
1/2		2600	3700	5100

Note: For gas service, select a tube thickness outside of the shaded area.

Table 17 — Metric

Tube O.D. (mm)	Tube Wall Thickness, mm			
	0.8	1.0	1.2	1.5
	Working Pressure, bar			
6	310	420	520	670
8		310	390	500
10		240	300	380
12		200	240	310

Note: For gas service, select a tube thickness outside of the shaded area.

Suggested Ordering Information

High-quality, fully annealed alloy C-276 tubing, ASTM B622 or equivalent. Hardness not to exceed 100 HRB. Tubing to be free of scratches, suitable for bending and flaring. O.D. tolerances not to exceed ±0.005 in (±0.13 mm).

Copper Tubing

Allowable working pressures are calculated from an S value of 6000 psi (41.3 MPa) for ASTM B75 tubing at 20 to 100°F (-28 to 37°C), as listed in ASME B31.3 and ASME B31.1.

Table 18 —Fractional

Tube O.D. (in.)	Tube Wall Thickness, in.									
	0.028	0.030	0.035	0.049	0.065	0.083	0.095	0.109	0.120	0.134
	Working Pressure, psig									
1/8	2700	3000	3600							
3/16	1800	1900	2300	3400						
1/4	1300	1400	1600	2500	3500					
5/16			1300	1900	2700					
3/8			1000	1600	2200					
1/2			800	1100	1600	2100				
5/8				900	1200	1600	1900			
3/4				700	1000	1300	1500	1800		
7/8				600	800	1100	1300	1500		
1				500	700	900	1100	1300	1500	
1 1/8					600	800	1000	1100	1300	1400

Note: For gas service, select a tube thickness outside of the shaded area.

FITOK

Table 19 —Metric

Tube O.D. (mm)	Tube Wall Thickness, mm									
	0.8	1.0	1.2	1.5	1.8	2.0	2.2	2.5	2.8	3.0
	Working Pressure, bar									
6	110	140	170	220						
8		100	120	160						
10		80	100	130						
12		60	80	100	130	140				
14		50	60	90	110	120	130			
15			60	80	100	110	120			
16				70	90	100	110	120		
18				60	80	90	100	110		
20				60	70	80	90	100	110	
22				50	60	70	80	90	100	
25				40	50	60	70	80	90	100
28					40	50	60	70	80	90

Note: For gas service, select a tube thickness outside of the shaded area.

Suggested Ordering Information

High-quality, soft annealed seamless copper tubing, ASTM B75 (B75M) or equivalent. Also soft annealed (Temper O) copper water tube, type K or type L to ASTM B88.

Grade 2 Titanium Tubing

Allowable working pressures are calculated from an S value of 16 700 psi (115.1 MPa) for ASTM B338 tubing at 20 to 100°F (-28 to 37°C), as listed in ASME B31.3 and ASME B31.1. For working pressure in accordance with ASME B31.1, multiply by 0.85.

Table 20 — Fractional

Tube O.D. (in.)	Tube Wall Thickness, in.			
	0.028	0.035	0.049	0.065
	Working Pressure, psig			
1/4	3500	4500	6700	9100
3/8		2900	4200	5800
1/2		2100	3100	4200

Note: For gas service, select a tube thickness outside of the shaded area.

Table 21 — Metric

Tube O.D. (mm)	Tube Wall Thickness, mm			
	0.8	1.0	1.2	1.5
	Working Pressure, bar			
6	290	380	470	600
10		210	260	340
12		180	220	280

Note: For gas service, select a tube thickness outside of the shaded area.

Suggested Ordering Information

High-quality, fully annealed seamless or welded and drawn grade 2 titanium tubing, ASTM B338 or equivalent. Tubing to be free of scratches, suitable for bending. O.D. tolerances not to exceed ±0.005 in (±0.13 mm).

Pressure Ratings at Elevated Temperatures

Table 22 — Elevated Temperature Factors

Temperature		Tubing Materials											
°F	°C	316/ 316L①	304/ 304L①	6 Mo	Super Duplex 2507	Alloy 400	Alloy 20②	Alloy 600②	Alloy 625	Alloy 825	Alloy C-276②	Copper	Ti
200	93	1.00	1.00	0.90	0.90	0.87	1.00	1.00	0.93	1.00	1.00	0.80	0.86
400	204	0.96	0.93	0.74	0.82	0.79	0.96	0.96	0.85	0.90	0.96	0.50	0.61
600	315	0.85	0.82	0.67	0.80	0.79	0.85	0.85	0.79	0.84	0.85		0.45
800	426	0.79	0.76			0.75	0.79	0.79	0.75	0.81	0.79		
1000	537	0.76	0.69					0.35	0.73		0.76		

① Dual-certified grades such as 304/304L and 316/316L meet the minimum chemistry and the mechanical properties of both alloy grades.
② Based on the lower derating factor for stainless steel, in accordance with ASME B31.3.

To determine allowable working pressure at elevated temperatures, multiply allowable working pressures from Tables 1 through 21 by a factor shown in Table 22.

Example: Type 316/316L stainless steel 1/2 in. O.D.×0.035 in. wall at 1000°F

1. The allowable working pressure at -20 to 100°F (-28 to 37°C) is 2600 psig (Table 1, page F-07).
2. The elevated temperature factor for 1000°F (537°C) is 0.76 (Table 22, above):
   2600 psig×0.76 = 1976 psig

The allowable working pressure for 316/316L 1/2 in. O.D.×0.035 in. wall tubing at 1000°F (537°C) is 1976 psig.

Basic Ordering Number

Fractional Stainless Steel Seamless Tubing

Tube O.D. (in.)	Wall Thickness (in.)	Basic Ordering Number		Weight
		316/316L	304/304L	lb/ft
1/4	0.035	SS-TMP-4-035-	S4-TMP-4-035-	0.082
	0.049	SS-TMP-4-049-	S4-TMP-4-049-	0.107
3/8	0.049	SS-TMP-6-049-	S4-TMP-6-049-	0.173
	0.065	SS-TMP-6-065-	S4-TMP-6-065-	0.219
1/2	0.049	SS-TMP-8-049-	S4-TMP-8-049-	0.240
	0.065	SS-TMP-8-065-	S4-TMP-8-065-	0.307
3/4	0.065	SS-TMP-12-065-	S4-TMP-12-065-	0.484
1	0.083	SS-TMP-16-083-	S4-TMP-16-083-	0.827
1 1/2	0.134	SS-TMP-24-134-	S4-TMP-24-134-	1.989

Metric Stainless Steel Seamless Tubing

Tube O.D. (mm)	Wall Thickness (mm)	Basic Ordering Number		Weight
		316/316L	304/304L	Kg/m
6	1.0	SS-TMP-6MM-1.0-	S4-TMP-6MM-1.0-	0.125
8	1.0	SS-TMP-8MM-1.0-	S4-TMP-8MM-1.0-	0.175
10	1.0	SS-TMP-10MM-1.0-	S4-TMP-10MM-1.0-	0.226
	1.5	SS-TMP-10MM-1.5-	S4-TMP-10MM-1.5-	0.320
12	1.5	SS-TMP-12MM-1.5-	S4-TMP-12MM-1.5-	0.395
	2.0	SS-TMP-12MM-2.0-	S4-TMP-12MM-2.0-	0.501
14	1.5	SS-TMP-14MM-1.5-	S4-TMP-14MM-1.5-	0.470
	2.0	SS-TMP-14MM-2.0-	S4-TMP-14MM-2.0-	0.602
16	1.5	SS-TMP-16MM-1.5-	S4-TMP-16MM-1.5-	0.545
	2.0	SS-TMP-16MM-2.0-	S4-TMP-16MM-2.0-	0.702
18	1.5	SS-TMP-18MM-1.5-	S4-TMP-18MM-1.5-	0.620
	2.0	SS-TMP-18MM-2.0-	S4-TMP-18MM-2.0-	0.802
20	2.0	SS-TMP-20MM-2.0-	S4-TMP-20MM-2.0-	0.903
25	2.5	SS-TMP-25MM-2.5-	S4-TMP-25MM-2.5-	1.410
28	2.5	SS-TMP-28MM-2.5-	S4-TMP-28MM-2.5-	1.769
30	3.0	SS-TMP-30MM-3.0-	S4-TMP-30MM-3.0-	2.031
32	3.5	SS-TMP-32MM-3.5-	S4-TMP-32MM-3.5-	2.501
38	4.0	SS-TMP-38MM-4.0-	S4-TMP-38MM-4.0-	3.410

Weight unit conversion:
1 lb/ft=1.488 Kg/m 1 Kg/m=0.672 lb/ft

Ordering Number Description

SS - TMP - 6 - 049 - 20F - BA - F2

Material	
SS	316/316L
SH	Enhanced-316/316L
S4	304/304L
S12	6Mo
D5	Duplex 2205
D7	Super duplex 2507
M	Alloy 400
A20	Alloy 20
INC	Alloy 600
A65	Alloy 625
A85	Alloy 825
HC	Alloy C-276

Series
TMP
TCT

Tube O.D.			
Fractional		Metric	
0.5	1/32"	0.8MM	0.8 mm
1	1/16"	1.5MM	1.5 mm
2	1/8"	3MM	3 mm
3	3/16"	6MM	6 mm
4	1/4"	8MM	8 mm
5	5/16"	10MM	10 mm
6	3/8"	12MM	12 mm
8	1/2"	14MM	14 mm
10	5/8"	15MM	15 mm
12	3/4"	16MM	16 mm
14	7/8"	18MM	18 mm
16	1"	20MM	20 mm
20	1 1/4"	22MM	22 mm
24	1 1/2"	25MM	25 mm
32	2"	28MM	28 mm
		30MM	30 mm
		32MM	32 mm
		38MM	38 mm
		50MM	50 mm

Wall Thickness			
Fractional		Metric	
010	0.010"	0.3	0.3 mm
012	0.012"	0.4	0.4 mm
014	0.014"	0.5	0.5 mm
016	0.016"	0.8	0.8 mm
020	0.020"	1.0	1.0 mm
028	0.028"	1.2	1.2 mm
035	0.035"	1.5	1.5 mm
049	0.049"	1.8	1.8 mm
065	0.065"	2.0	2.0 mm
083	0.083"	2.2	2.2 mm
095	0.095"	2.5	2.5 mm
109	0.109"	2.8	2.8 mm
120	0.120"	3.0	3.0 mm
134	0.134"	3.5	3.5 mm
156	0.156"	4.0	4.0 mm
188	0.188"	4.5	4.5 mm
		5.0	5.0 mm

Length	
40N	Length 40 in. (For Straight-Length Tubing Only)
80N	Length 80 in. (For Straight-Length Tubing Only)
xxM	Length xx m (Except For Random Length Coiled Tubing)
xxF	Length xx ft (Except For Random Length Coiled Tubing)
CL11F	Random Length Grade CL11F (For Coiled Tubing Only)
CL11M	Random Length Grade CL11M (For Coiled Tubing Only)
CL21F	Random Length Grade CL21F (For Coiled Tubing Only)
CL21M	Random Length Grade CL21M (For Coiled Tubing Only)
CL31F	Random Length Grade CL31F (For Coiled Tubing Only)
CL31M	Random Length Grade CL31M (For Coiled Tubing Only)
CL41F	Random Length Grade CL41F (For Coiled Tubing Only)
CL41M	Random Length Grade CL41M (For Coiled Tubing Only)

Internal Surface Condition	
	Pickling
BA	Bright Annealing
CRBA	Cold Working Followed by Bright Annealing

CRBA Process Description: precision cold worked, degreased with special cleaning agent, and bright annealed. Internal surface roughness to Ra 0.8 μm Max.

Cleaning and Packaging	
	FC-01
F2	FC-02

Note: "Ordering Number Description" is a referenc to understand the combination rules of FITOK product part number. Not all combinations aere available. For any questions, please contact FITOK group or our authorized distributors.

Tools and Accessories



Contents

Hand Tube Benders

F-20

Tube Cutters

F-20

Tube Deburring Tools

F-21

Depth Marking Tools

F-21

Hydraulic Presetting Tools

F-22

Manual Presetting Tools

F-23

Gap Inspection Gauges

F-23

Bulkhead Retainers

F-24

Tee Wrenches

F-25

Hand Tube Benders

Features

◎ For bending stainless steel and copper tubing from 1/4" to 1/2" and 6 mm to 16 mm outside diameter
◎ Roll dies reduce bending force and tube ovality, as compared to conventional slide block design
◎ 1° to 180° bending range

Ordering Information

Ordering Number	Tube O.D.	Bend Radius
HTB-4S	1/4"	0.56"
HTB-4	1/4"	0.75"
HTB-5	5/16"	0.94"
HTB-6	3/8"	
HTB-8	1/2"	1.5"
HTB-6M	6 mm	15 mm
HTB-8M	8 mm	24 mm
HTB-10M	10 mm	
HTB-12M	12 mm	38 mm
HTB-14M-L	14 mm	56 mm
HTB-16M-L	16 mm	



The hand tube bender can not be used for super duplex 2507 tubing over 1/4" or for medium-pressure tubing.

Tube Cutters

Features

◎ For cutting stainless steel, soft copper, and aluminum tubing from 1/8" to 2 5/8" and 3 to 65 mm outside diameter
◎ Flare-out and work hardening of tube end is reduced



Ordering Information

Ordering Number	Tube O.D.	Wheel Ordering Number
FTC-03	1/8" to 1" and 3 mm to 25 mm	FTC-03-RR
FTC-04	1/4" to 1 3/8" and 6 mm to 35 mm	FTCW-45
FTC-05	1/4" to 2 5/8" and 6 mm to 65 mm	

Tube Deburring Tools

Features

◎ For deburring stainless steel, carbon steel, copper and aluminum tube ends
◎ Steel blades for long life



TDT-05 TDT-03 TDT-01

Ordering Information

Ordering Number	Deburring Position	Size	Tube Material
TDT-01	I.D.	less than 6 mm	Stainless Steel, Carbon Steel, Copper, Aluminum
TDT-03	O.D.	6 mm to 38 mm and 1/4" to 1 1/2"	Copper, Aluminum
	I.D.		
TDT-05	O.D.	6 mm to 36 mm and 1/4" to 1 1/4"	Stainless Steel, Carbon Steel
	I.D.		

Depth Marking Tools

Features

◎ Ensure the tubing is against the bottom of the fitting body

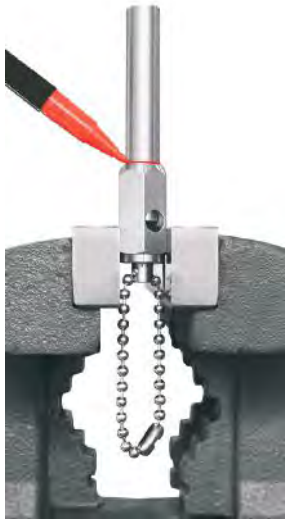

Ordering Information

Ordering Number	Tube O.D.
DMT-4	1/4"
DMT-6	3/8"
DMT-8	1/2"
DMT-10	5/8"
DMT-12	3/4"
DMT-14	7/8"
DMT-16	1"

Ordering Number	Tube O.D.
DMT-6M	6 mm
DMT-8M	8 mm
DMT-10M	10 mm
DMT-12M	12 mm
DMT-16M	16 mm
DMT-18M	18 mm
DMT-20M	20 mm
DMT-25M	25 mm

Hydraulic Presetting Tools

Features



- To preset ferrules onto tubing
- For installing 1/2" to 2" and 12 mm to 50 mm carbon steel, stainless steel, and alloy steel tube fittings
- Manually operated hydraulic pump, without requirement for power or compressed air
- Made of high grade alloy steel for more durable and firmer usage
- Flexible hose connection between the pump and jig to assure easy and comfortable operation
- Reduce assembly and installation time and operator error
- Fit neatly in a rugged plastic carrying case
- Figure dimensions (L × W × H): 12.6 in. x 9.8 in. x 5.9 in. (the height of handle excluded)

Ordering Information

HPT-03 Series

Ordering Number	Tube O.D.
HPT-03M	12 mm, 14 mm, 15 mm, 16 mm, 18 mm, 20 mm, 22 mm, 25 mm
HPT-03F	1/2", 5/8", 3/4", 7/8", 1"
HPT-03C	Exclusive of die heads, please select the die heads you need from HPT-03 MF series die heads
HPT-03MF	Include HPT-03M and HPT-03F

Die Heads for HPT-03MF Series

Ordering Number	Tube O.D.
HPT-ML12	12 mm
HPT-ML14	14 mm
HPT-ML15	15 mm
HPT-ML16	16 mm
HPT-ML18	18 mm
HPT-ML20	20 mm
HPT-ML22	22 mm
HPT-ML25	25 mm
HPT-FL8	1/2"
HPT-FL10	5/8"
HPT-FL12	3/4"
HPT-FL14	7/8"
HPT-FL16	1"

HPT-05 Series

Ordering Number	Tube O.D.
HPT-05M	28 mm, 30 mm, 32 mm, 38 mm, 50 mm
HPT-05F	1-1/4", 1-1/2", 2"
HPT-05C	Exclusive of die heads, please select the die heads you need from HPT-05MF series die heads
HPT-05MF	Include HPT-05M and HPT-05F

Die Heads for HPT-05MF Series

Ordering Number	Tube O.D.
HPT-ML28	28 mm
HPT-ML30	30 mm
HPT-ML32	32 mm
HPT-ML38	38 mm
HPT-ML50	50 mm
HPT-FL20	1-1/4"
HPT-FL24	1-1/2"
HPT-FL32	2"

Manual Presetting Tools

Features

For tube fitting installations in close quarters, the presetting tool can make installation easier and more reliable when paired with the table vice.



- For installing 1/4" to 1" and 6 mm to 25 mm carbon steel, stainless steel and alloy steel tube fittings
- High grade alloy used for clamp to make the presetting tool reliable and durable
- Easy mounting to table vice
- Wider and safer work condition

Ordering Information

Ordering Number	Tube O.D.
MPT-6M	6 mm
MPT-8M	8 mm
MPT-10M	10 mm
MPT-12M	12 mm
MPT-14M	14 mm
MPT-15M	15 mm
MPT-16M	16 mm
MPT-18M	18 mm
MPT-20M	20 mm
MPT-22M	22 mm
MPT-25M	25 mm

Ordering Number	Tube O.D.
MPT-4	1/4"
MPT-6	3/8"
MPT-8	1/2"
MPT-10	5/8"
MPT-12	3/4"
MPT-14	7/8"
MPT-16	1"

FITOK gap inspection gauge can not be used to check the fittings preset by MPT series presetting tools.

Gap Inspection Gauges

Features

On initial installation of 6D tube fittings, the FITOK gap inspection gauge assures the installer or inspector that a fitting has been sufficiently tightened.

- Sizes from 1/16" to 1" and 2 mm to 25 mm
- Simple and consistent operation, applicable for all metal fittings

Individual sizes series (Fig.1)

These gauges can be used to inspect initial makeup on fittings installed from finger-tight or snug position.
The thicker end of the gauge is used for fittings installed from finger-tight position.
The thinner end of the gauge is used for fittings installed from snug position.



Fig.1
Individual Sizes Series

Multiple sizes series (Fig.2)

These gauges can be used to inspect initial makeup on fittings installed from finger-tight position.



Fig.2
Multiple Sizes Series

Ordering Information

Fitting Size		Ordering Number
in.	mm	
1/16	—	GIG-1
1/8	2, 3	GIG-2
3/16	4	GIG-3
1/4	6	GIG-4
5/16	8	GIG-5
3/8	—	GIG-6
—	10	GIG-10M
1/2	12	GIG-8
5/8	14, 15, 16	GIG-10
3/4	18	GIG-12
7/8	20, 22	GIG-14
1	25	GIG-16
1/4, 3/8, 1/2	6, 12	GIG-468
1/4, 1/2	6, 8, 10, 12	GIG-48

Bulkhead Retainers

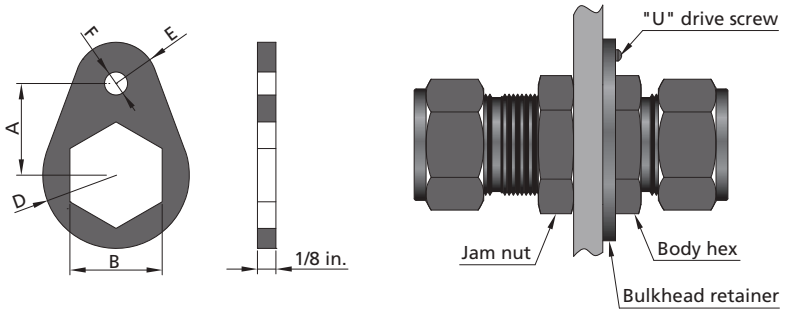

Bulkhead fitting installation utilizing bulkhead retainer

Ordering Information

Fitting Size		Ordering Number	Dimensions, in.						"U" Drive Screw Size	Drill Number
in.	mm		A	B	D	E	F	Drill Hole Dia		
1/16	—	SS-BR-1	3/8	5/16	5/16	5/32	5/32	0.120	6-3/8	31
1/8	—	SS-BR-2	1/2	1/2	13/32	7/32				
3/16	3,4	SS-BR-3	9/16	9/16	15/32	1/4				
1/4	6	SS-BR-4	5/8	5/8	1/2	9/32				
5/16	—	SS-BR-5	11/16	11/16	9/16	5/16				
—	8	SS-BR-M8	11/16	18mm	9/16	5/16				
3/8	—	SS-BR-6	3/4	3/4	5/8	11/32				
—	10	SS-BR-M10	15/16	22mm	3/4	13/32	7/32	0.161	10-1/2	20
1/2	12	SS-BR-8	15/16	15/16	3/4	13/32				
5/8	14,15,16	SS-BR-10	1	1-1/16	13/16	13/32				
3/4	18	SS-BR-12	1-1/16	1-3/16	29/32	15/32				
7/8	—	SS-BR-14	1-1/8	1-5/16	1-1/32	17/32				
1	25	SS-BR-16	1-9/32	1-5/8	1-5/32	9/16				

Tee Wrenches

Features

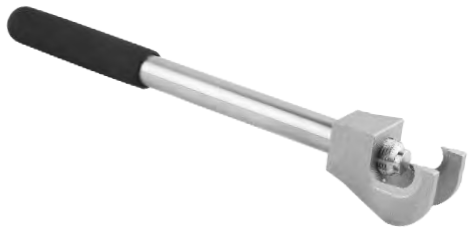

◎ For the installation of union tees and crosses to hold fitting body firmly
◎ Same wrench for similar metric and fractional fitting sizes
◎ Small size, easy to carry

Ordering Information

Fitting Size		Fitting Type		Ordering Number
in.	mm	Tee	Cross	
1/8	3	√	√	TWR-2
1/4	6	√	√	TWR-4
5/16, 3/8	8	√	√	TWR-6
1/2	12	√	√	TWR-8
/	10	√	①	TWR-10M

① Use TWR-8 for crosses in this specification.

Syphons

WS, LWS and UWS Series



Features

◎ Maximum working temperature: 850 °F (454 °C).
◎ Working pressure up to: 6000 psig (414 bar). Multiply the working pressure by the elevated temperature factors to get the working pressure at elevated temperature. To locate the elevated temperature factor, please refer to the FITOK catalog for ***Tubing***.
◎ Standard materials are 316 SS and 304 SS, other materials are available upon request.

Material Specifications

Component	Material
Tube	316/316L or 304/304L
Connector	316 or 304

Types and Dimensions

Dimensions are in mm unless otherwise specified. They are for reference only and are subject to change.

WS Series

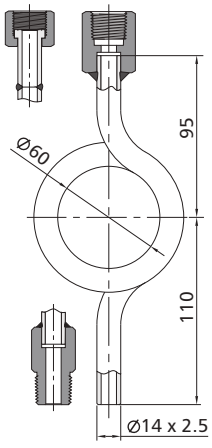

LWS Series

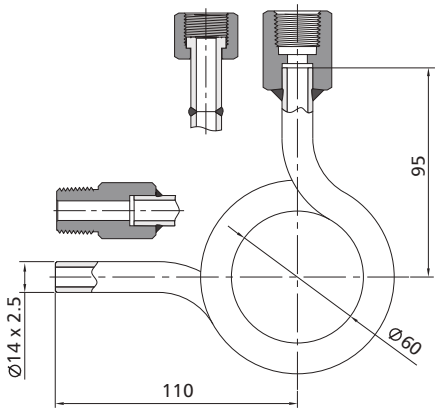

UWS Series

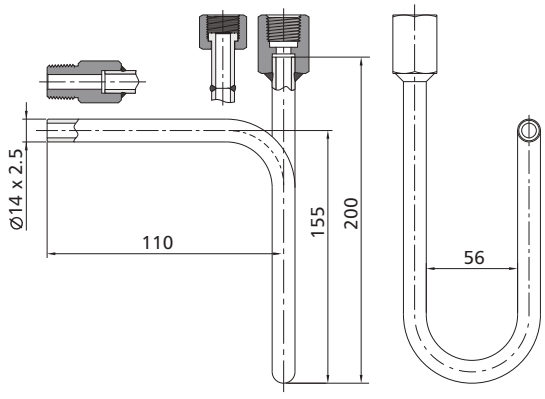

Ordering Information

Add the material designator as prefix to the basic ordering number (SS for 316 SS, S4 for 304 SS).
Example: **SS-WS-MTB14-T**

End Types and Size		Basic Ordering Number		
Cock End	Process End	WS Series	LWS Series	UWS Series
1/2 Female NPT	1/2 Female NPT	-WS-FNS8	-LWS-FNS8	-UWS-FNS8
1/2 Female NPT	1/4 Female NPT	-WS-FNS8-FNS4	-LWS-FNS8-FNS4	-UWS-FNS8-FNS4
1/2 Female NPT	1/2 Female ISO Parallel Thread	-WS-FNS8-RG8	-LWS-FNS8-RG8	-UWS-FNS8-RG8
1/2 Female NPT	1/4 Female ISO Parallel Thread	-WS-FNS8-RG4	-LWS-FNS8-RG4	-UWS-FNS8-RG4
1/2 Female NPT	M20 x 1.5 Female ISO	-WS-FNS8-MG20	-LWS-FNS8-MG20	-UWS-FNS8-MG20
1/2 Female NPT	M14 x 1.5 Female ISO	-WS-FNS8-MG14	-LWS-FNS8-MG14	-UWS-FNS8-MG14
1/2 Female NPT	1/2 Tube Socket Weld	-WS-FNS8-TS8	-LWS-FNS8-TS8	-UWS-FNS8-TS8
1/2 Female NPT	14 mm Tube Socket Weld	-WS-FNS8-MTS14	-LWS-FNS8-MTS14	-UWS-FNS8-MTS14
M20 x 1.5 Female ISO	M20 x 1.5 Female ISO	-WS-MG20	-LWS-MG20	-UWS-MG20
M20 x 1.5 Female ISO	M14 x 1.5 Female ISO	-WS-MG20-MG14	-LWS-MG20-MG14	-UWS-MG20-MG14
M20 x 1.5 Female ISO	∅14 x 2.5	-WS-MG20-MTB14	-LWS-MG20-MTB14	-UWS-MG20-MTB14
Rotating M20 x 1.5 Female ISO	M20 x 1.5 Female ISO	-WS-RMG20-MG20	-LWS-RMG20-MG20	-UWS-RMG20-MG20
Rotating M20 x 1.5 Female ISO	M14 x 1.5 Female ISO	-WS-RMG20-MG14	-LWS-RMG20-MG14	-UWS-RMG20-MG14
Rotating M20 x 1.5 Female ISO	∅14 x 2.5	-WS-RMG20-MTB14	-LWS-RMG20-MTB14	-UWS-RMG20-MTB14
1/2 Female ISO Parallel Thread	M20 x 1.5 Female ISO	-WS-RG8-MG20	-LWS-RG8-MG20	-UWS-RG8-MG20
1/2 Female ISO Parallel Thread	M14 x 1.5 Female ISO	-WS-RG8-MG14	-LWS-RG8-MG14	-UWS-RG8-MG14
1/2 Female ISO Parallel Thread	∅14 x 2.5	-WS-RG8-MTB14	-LWS-RG8-MTB14	-UWS-RG8-MTB14
Rotating 1/2 Female ISO Parallel Thread	M20 x 1.5 Female ISO	-WS-RRG8-MG20	-LWS-RRG8-MG20	-UWS-RRG8-MG20
Rotating 1/2 Female ISO Parallel Thread	M14 x 1.5 Female ISO	-WS-RRG8-MG14	-LWS-RRG8-MG14	-UWS-RRG8-MG14
Rotating 1/2 Female ISO Parallel Thread	∅14 x 2.5	-WS-RRG8-MTB14	-LWS-RRG8-MTB14	-UWS-RRG8-MTB14
∅14 x 2.5	∅14 x 2.5	-WS-MTB14-T	-LWS-MTB14-T	-UWS-MTB14-T
1/2 Male NPT	1/2 Male NPT	-WS-NS8	-LWS-NS8	-UWS-NS8
1/2 Male NPT	1/4 Female NPT	-WS-NS8-FNS4	-LWS-NS8-FNS4	-UWS-NS8-FNS4
1/2 Male ISO Parallel Thread	1/4 Male ISO Parallel Thread	-WS-BP8-BP4	-LWS-BP8-BP4	-UWS-BP8-BP4
1/2 Male ISO Parallel Thread	1/4 Female ISO Parallel Thread	-WS-BP8-RG4	-LWS-BP8-RG4	-UWS-BP8-RG4
M20 x 1.5 Male ISO	M20 x 1.5 Female ISO	-WS-MS20-MG20	-LWS-MS20-MG20	-UWS-MS20-MG20
M20 x 1.5 Male ISO	M14 x 1.5 Female ISO	-WS-MS20-MG14	-LWS-MS20-MG14	-UWS-MS20-MG14
M14 x 1.5 Male ISO	M20 x 1.5 Female ISO	-WS-MS14-MG20	-LWS-MS14-MG20	-UWS-MS14-MG20
M14 x 1.5 Male ISO	M14 x 1.5 Female ISO	-WS-MS14-MG14	-LWS-MS14-MG14	-UWS-MS14-MG14

Warranty Information

FITOK products are backed by The FITOK Limited Lifetime Warranty. For a copy, contact FITOK Group or our authorized distributors.

FITOK

info@fitok.com
www.fitok.com

Copyright© 2024 FITOK Group FK-FC-G-01-EN-24V1