Air Regulators









- Type 10
- Type 110
- Type 40
- Type 41
- Type 50
- Type 50 NACE
- Type 51
- Type 51SS
- Type 60
- Type 65
- Type 70
- Type 70BP
- Type 77
- Type 78
- Type 91
- Type 92







Type 10
Pressure Regulator Series

Features

Highly Accurate Pressure Regulation

The Bellofram Type 10 Regulator controls output pressure with an accuracy of 0.1%, and has very low sensitivity to changes in supply pressure and flow.

Start-Up Stability

The Type 10 Regulator has been designed to eliminate the need for any readjustment of the regulated pressure after long "down time." At start-up, the regulated pressure will return to its output setting.

Flow Stability

The regulated pressure is held constant over substantial changes in flow due to the high-gain pneumatic servo amplifier. Particularly good from dead end to 20 cubic meters per hour (12 SCFM).

Automatic High Downstream Relief Capacity

An integral relief valve provides for exhaust flow whenever the regulated pressure is reset to a lower value. The exceptionally large capacity of this relief valve assures immediate response when the downstream regulated pressure must be reduced under dead-end conditions.

Pressure Stability

A high performance servo-operated control mechanism is utilized in the regulator. The pressure supplied to the pneumatic servo amplifier is reduced and held constant.

Locking Capability

The standard Type 10 regulator has a locking nut which, when tightened, prevents inadvertent adjustment of pressure.

Temperature Stability

Shifts in the regulated pressure over wide ambient temperature variations are minimized by the use of a measuring capsule made of specially selected stainless steel alloys.

Proven Reliability

Thousands of Type 10 Regulators are in the field. Proof of the accuracy of the regulator is reflected by its use in most air gauging systems and other precision pressure control applications.

Mounting

The unit may be installed in any position. It can be panel mounted or supported by in-line plumbing.

Applications

Industrial processes, inspection procedures, control and analytical instrumentation require precise regulation of air pressure in pipes and vessels. Maintaining constant pressures in these applications is usually complicated by the presence of numerous disturbances, such as changes in supply pressure, flow, and ambient temperature, that tend to upset prevailing conditions.

Bellofram Pressure Regulators provide accuracy, precision control, and maximum stability under the most adverse operating conditions.

Type 10 Pressure Regulator Applications

- Gas Mixing
- Valve Operators
- Gate Actuators
- Positioner Signal
- Calibration Stands
- Air Hoists
- Air Gauging
- Cylinder Loading
- Force Balance Hoists
- Disc and Shoe Air Brakes
- Clamp Units
- Web Tensioning
- Press Units
- Roll Loading





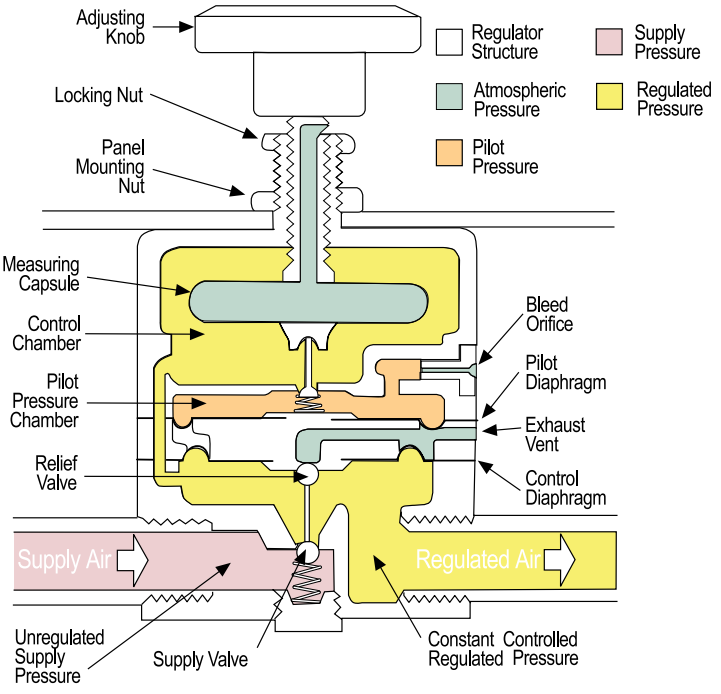

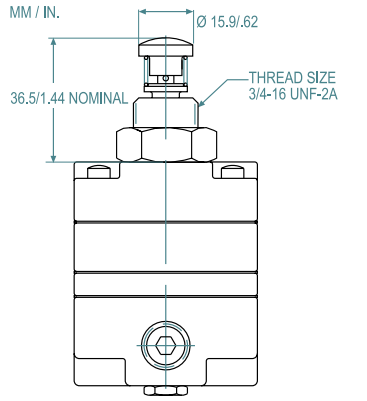

Plunger



Type 10PL

Plunger Operated Regulator

This reliable plunger operated regulator provides unmatched accuracy and repeatability. Regulated pressure is changed by direct linear actuation of the plunger instead of turning a knob.

Plunger Travel

Pressure Range		Plunger Travel*	
BAR	psig	mm	inch
0.1–1.7	2-25	1.9	.075
0.1–4.1	2-60	2.3	.090
0.1–8.3	2-120	2.5	.100

*±10% manufacturing tolerance

Return Spring

0.4 in. (10mm) nominal return height; 7 oz. (200g) approximate preload force; 7.5 lb./in. (135g/mm) approximate spring rate, between 0.4 in. (10mm) and 0.24 in. (6.5mm) compressed height.

Plunger Knob Material: Steel

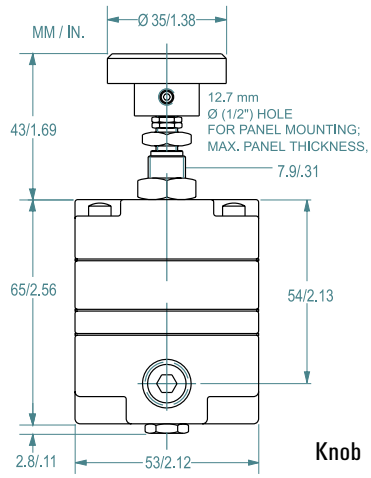

Knob



The basic Type 10 Regulator is offered with a choice of three port sizes and three output ranges.

Type 10HR & 10EXHR

High Relief Regulators

Similar in proven accuracy and rugged construction to other Type 10 Regulators, these units provide extra fast "blowdown" for very rapid release of down stream pressure. The extra relief feature makes these regulators suitable for cylinder return stroke actuation, air hoists, and similar applications requiring fast exhaust.

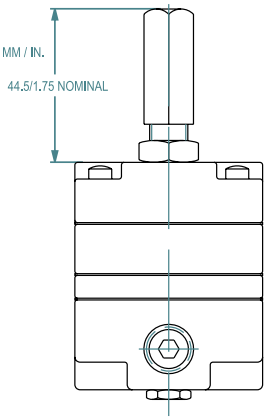

Tamper Resistant

The Type 10 Regulator is available with a tamper resistant cover, as illustrated. The cover is threaded over the adjusting screw to prevent inadvertent or unwarranted adjustment of output pressure.



Type 10LR

Low Range Regulator

The main feature of the Type 10LR is its low-range pressure characteristic. It operates on a maximum of 50 psig / 3.4 BAR supply pressure and offers an output pressure range of 0.5 psig / 0.03 BAR to 25 psig / 1.7 BAR

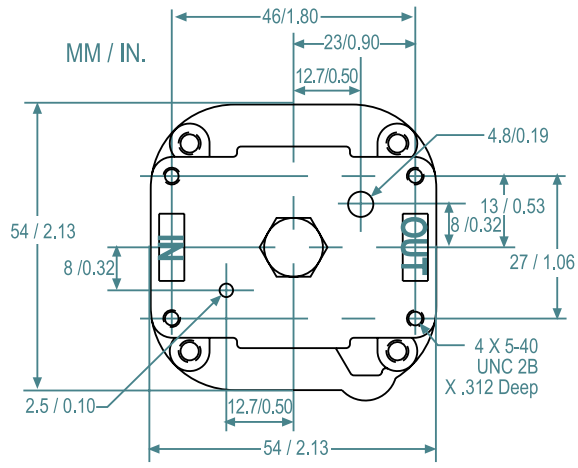

The Type 10 Regulator is also available with bottom ports, (Type 10BM) consult factory.

	Type 10LR	Type 10 / 10PL	Type 10 BM	Type 10HR	Type 10 EXHR	Type 10 Motorized
Maximum Supply Pressure	50 psig / 3.4 BAR	150 psig / 10.3 BAR	150 psig / 10.3 BAR	150 psig / 10.3 BAR	150 psig / 10.3 BAR	150 psig / 10.3 BAR
Pressure Ranges	.5-25 psig 0.03 - 1.7 BAR	2-25, 2-60, 2-120 psig 0.14-1.7, 0.14-4.1, 0.14-8.3 BAR	2-25, 2-60, 2-120 psig 0.14-1.7, 0.14-4.1, 0.14-8.3 BAR	2-120 psig 0.14-8.3 BAR	2-120 psig 0.14-8.3 BAR	0.5-25, 2-25, 2-60, 2-120 psig 0.03-1.7, 0.14-1.7, 0.14-4.1, 0.14-4.1, 0.14-8.3 BAR
Port Sizes	1/4	1/8, 1/4, 3/8	N/A	1/8, 1/4, 3/8	1/8, 1/4, 3/8	1/8, 1/4, 3/8
Effect of Supply Pressure Variation on Outlet Pressure	0.005 psig / 0.3 mBAR per 25 psig / 1.7 BAR change	0.005 psig / 0.3 mBAR per 25 psig / 1.7 BAR change	0.005 psig / 0.3 mBAR per 25 psig / 1.7 BAR change	0.005 psig / 0.3 mBAR per 25 psig / 1.7 BAR change	0.005 psig / 0.3 mBAR per 25 psig / 1.7 BAR change	0.005 psig / 0.3 mBAR per 25 psig / 1.7 BAR change
Sensitivity	1/8" / 3.2mm of water	1/8" / 3.2mm of water	1/8" / 3.2mm of water	1/8" / 3.2mm of water	1/8" / 3.2mm of water	1/8" / 3.2mm of water
Bleed Rate	4.8 scfh / 2.3 LPM	4.8 scfh / 2.3 LPM	4.8 scfh / 2.3 LPM	4.8 scfh / 2.3 LPM	4.8 scfh / 2.3 LPM	4.8 scfh / 2.3 LPM
Forward Flow Capacity	4 scfm / 113 LPM	14 scfm / 396 LPM	3 scfm / 85 LPM	14 scfm / 396 LPM	14 scfm / 396 LPM	10 scfm / 283 LPM
Exhaust Capacity @ 5 psig (0.4 BAR) above setpoint	2 scfm / 56 LPM	2 scfm / 56 LPM	2 scfm / 56 LPM	10 scfm / 283 LPM	15 scfm / 424 LPM	2 scfm / 56 LPM
Temperature Range	-20 to 160˚F -29 to 71˚C	-20 to 160˚F -29 to 71˚C	-20 to 160˚F -29 to 71˚C	-20 to 160˚F -29 to 71˚C	-20 to 160˚F -29 to 71˚C	0 to 140˚F -18 to 60˚C
Effect of Changes in Flow on Regulated Pressure	N/A	0.25 psig / 0.01 BAR per 10 scfm / 283 LPM	N/A	0.25 psig / 0.01 BAR per 10 scfm / 283 LPM	0.25 psig / 0.01 BAR per 10 scfm / 283 LPM	0.25 psig / 0.01 BAR per 10 scfm / 283 LPM

Effect of Changes in Flow on Regulated Pressure

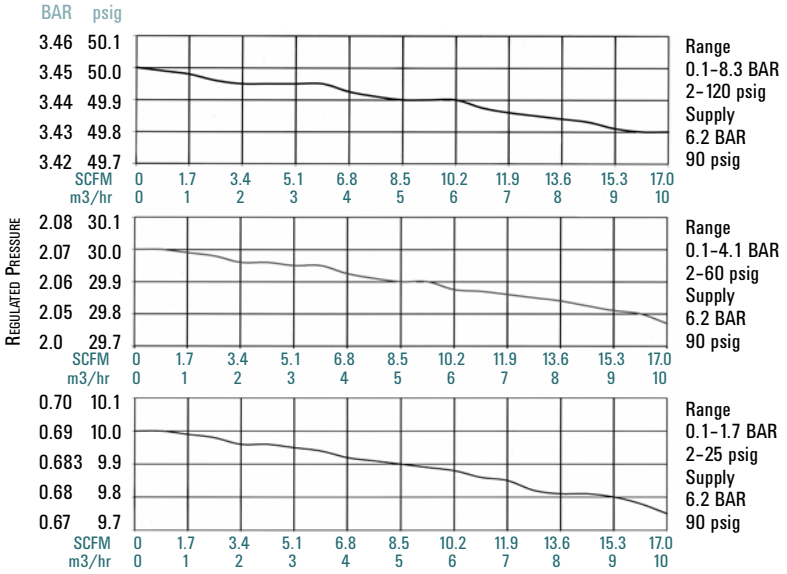

Effect of Upstream Pressure Variations on Regulated Pressure

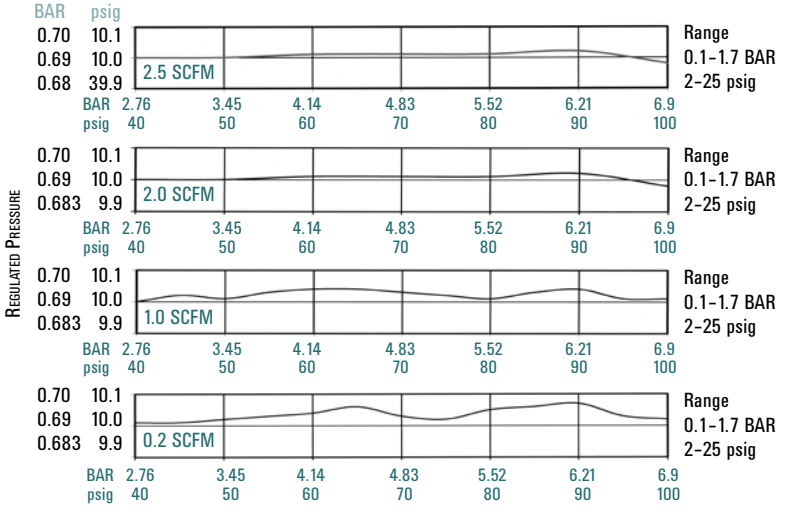

Manual Type 10 Ordering Information

Type	Part Number	Port Size NPT	Control Range BAR	Control Range psig
10	960-001-000	1/8	0.1-1.7	2-25
	960-003-000	1/4	0.1-1.7	2-25
	960-005-000	3/8	0.1-1.7	2-25
10	960-007-000	1/8	0.1-4.1	2-60
	960-009-000	1/4	0.1-4.1	2-60
	960-011-000	3/8	0.1-4.1	2-60
10	960-013-000	1/8	0.1-8.3	2-120
	960-015-000	1/4	0.1-8.3	2-120
	960-017-000	3/8	0.1-8.3	2-120
10BM	960-126-000		0.1-1.7	2-25
	960-127-000	N/A	0.1-4.1	2-60
	960-128-000		0.1-8.3	2-120
10HR	960-028-000	1/8	0.1-8.3	2-120
	960-029-000	1/4	0.1-8.3	2-120
	960-030-000	3/8	0.1-8.3	2-120
10EXHR	960-072-000	1/8	0.1-8.3	2-120
	960-073-000	1/4	0.1-8.3	2-120
	960-074-000	3/8	0.1-8.3	2-120
10PL	960-019-000	1/8	0.1-1.7	2-25
	960-020-000	1/4	0.1-1.7	2-25
	960-021-000	3/8	0.1-1.7	2-25
10PL	960-022-000	1/8	0.1-4.1	2-60
	960-023-000	1/4	0.1-4.1	2-60
	960-024-000	3/8	0.1-4.1	2-60
10PL	960-025-000	1/8	0.1-8.3	2-120
	960-026-000	1/4	0.1-8.3	2-120
	960-027-000	3/8	0.1-8.3	2-120
10LR	960-053-000	1/4	0.03-1.7	0.5-25

Type 10 Motorized

Pressure Regulators



Bellofram's high precision Type 10 pressure regulator – a servo balanced system in which the main valve is operated by a pilot valve – is also available in a motorized configuration.This combination is particularly attractive because it offers low power requirements (2 rpm/4 watts; 6 rpm/6 watts) with extremely high accuracy.

Applications

The motorized Type 10 pressure regulator can be used for any application where electric control of a pneumatic system is desired. It is often used for remote pressure control and for ventilation systems. It can also be easily integrated into open or closed loop process control systems and may be used with programmable controllers.

Features

- Mountable at any angle
- In the event of power failure, the pneumatic output remains constant at last setting
- Low electrical power requirements
- Adjustable mechanical stop limits maximum output pressure
- No electrical power is required when operating at constant output pressure
- No pre-regulation of supply pressure required
- Built-in overload slip clutch prevents damage to gear train at end of travel, eliminating the need for limit switches in most applications.

Construction

The regulator and motor are mounted to a bracket and connected to each other through a flexible coupling. The assembly can be mounted through holes in the bracket.

Motor Specifications

Reversible, synchronous motor with gear drive and slip clutch.

Operating Voltage 110VAC, 24VAC or 220VAC.

Frequency

60 Hz, Except 220 VAC model is 50 Hz.

Power Consumption (maximum)

2 rpm/4 watts, 6 rpm/6 watts.

Speeds Available 2 and 6 rpm.

Torque Approx. 8 in. oz.

Typical Installation

Control Circuit Diagram

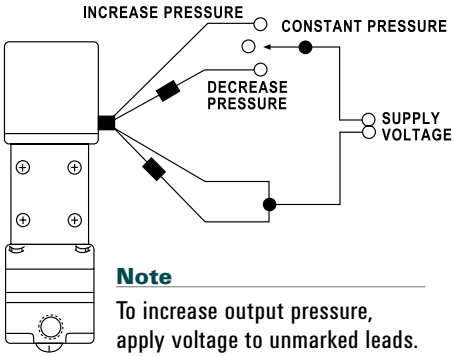

Note

To increase output pressure, apply voltage to unmarked leads. To decrease output pressure, apply voltage to marked leads.

Regulator-Motor Specifications

Pressure Range		Approximate Time to Cover Full Range (seconds)	
BAR	psig	2 rpm	6 rpm
0.1-1.7	2-25	75	25
0.1-4.1	2-60	90	30
0.1-8.3	2-120	150	50

*±10% manufacturing tolerance

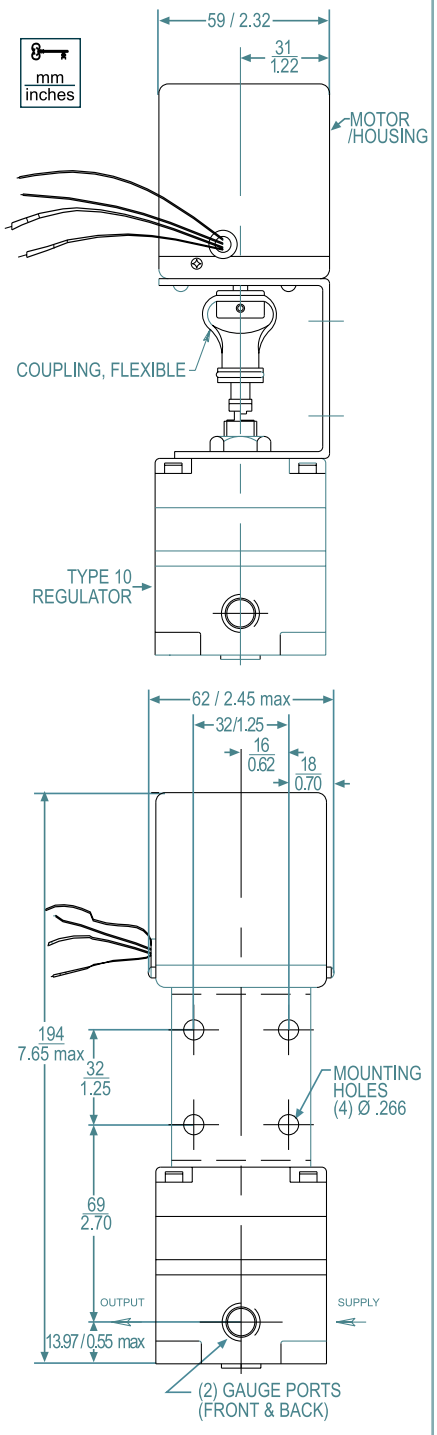

Drawings and dimensions are for reference only.

Motorized Type 10 Ordering Information

9 6 0 - 1 8 0 - ▲ ▲ ▲

				Motor Specifications
1			2 RPM	110 VAC 4 WATTS 60 Hz
2			6 RPM	110 VAC 6 WATTS 60 Hz
3			6 RPM	220 VAC 6 WATTS 50 Hz
4			2 RPM	24 VAC 4 WATTS 60 Hz
5			6 RPM	24 VAC 6 WATTS 60 Hz
				Pressure Range
	1		2-25 psig / 0.1-1.7 BAR	
	2		2-60 psig / 0.1-4.1 BAR	
	3		2-120 psig / 0.1-8.3 BAR	
	4		L. R. Model, 0.5-25 psig / 0.03-1.7 BAR	
	5		H.R. Model, 2-120 PSI / 0.1-8.3 BAR	
				Port Size
		1	1/8 NPT	
		2	1/4 NPT	
		3	3/8 NPT	

Type 110

Pressure Regulator Series

Features

- Highly Accurate Pressure Regulation
- Large Port Sizes Available:
  3/8, 1/2, 3/4 and 1 NPT
  (BSPP and BSPT also Available)
- Adjustment Stem Locking Capability
- High Forward Flow Capacity – 150+ SCFM
- High Exhaust Capacity
- Balanced Supply Valve
- Low Sensitivity to Supply Pressure Variations
- Low Sensitivity to Flow Variations

Applications

The Type 110 was developed specifically for use with Air Balancing Systems or Zero-Gravity Arms. Such systems require very small forward to reverse flow offsets for smooth operation. The precision regulators that can achieve the sensitivity requirements do not typically possess the forward or exhaust capacity to handle large balancing arms or cylinders. The Type 110 does not have this limitation. It is ideal for use in any application where precise regulation of pressure is required along with high flow or high exhaust capacity.

Other typical applications

- Valve Operators
- Air Hoists
- Web Tensioning
- Roll Loading
- Large Cylinder Loading
- Air Brakes
- Force Balance Hoists
- Gate Actuators

Description

The Type 110 combines the proven technology of the Marsh Bellofram Type 10 regulator with the large pneumatic booster of the Type 79 Relay. The result is a precise, crisply responding regulator that can achieve very large forward and exhaust flows. Forward to reverse flow offset is minimized by the capsule operated, servo-control system located in the upper portion of the regulator. This servo-control system supplies a pilot pressure to the large integral pneumatic booster. The large supply and exhaust orifices of the integral booster enable this regulator to produce very high forward and exhaust flow rates. Few regulators can offer this combination of sensitivity and large flow capacity.

As with all of the Type 10 regulators, the stainless steel measuring capsule is the "heart" of the Type 110 Pressure Regulator. Originally developed for sensitive aircraft altimeters, this precision-sensing element provides the energy to activate the servo-control mechanism. It provides greater regulation and accuracy while eliminating the problems usually encountered with range springs and conventional diaphragms. Because of the balanced supply valve in the integral pneumatic booster, the Type 110 can work with higher supply pressures (250 PSIG) than many other regulators.





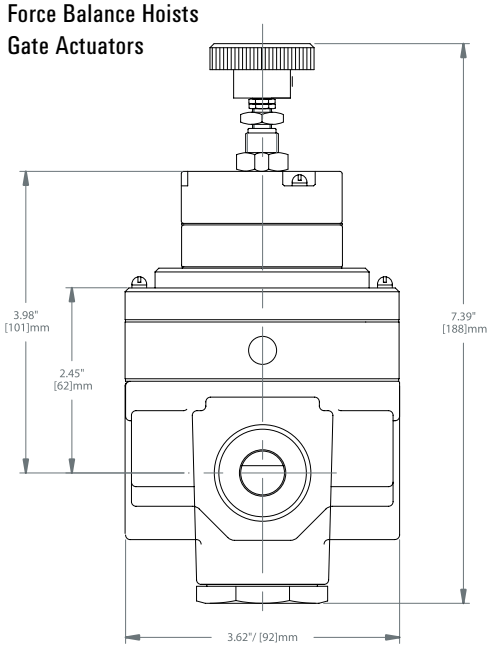

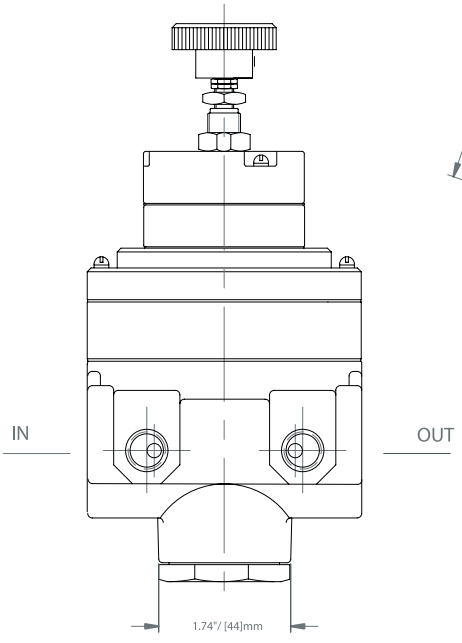

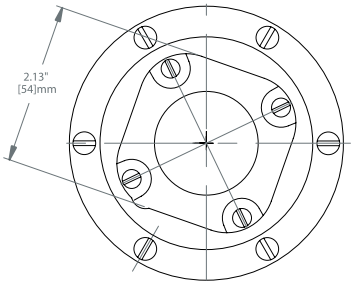

	Type 110
Maximum Supply Pressure	250 PSIG / 17.2 BAR
Output Pressure Ranges	2-25 PSIG / 0.14-1.7 BAR 2-50 PSIG / 0.14-3.5 BAR 2-110 PSIG / 0.14-7.6 BAR
Port Sizes	3/8, 1/2, 3/4, 1 NPT, BSPT or BSPP
Effect of Supply Pressure Variation on Outlet Pressure	0.01 psig / 0.6 mBAR change in output for a 25 psig/1.7 BAR change in supply pressure
Sensitivity	1/4" / 6.4 mm of water column
Air Consumption	14 scfh / 6.6 slpm @ max output pressure
Forward Flow Capacity (100 psig/ 6.9 BAR supply, 20 psig / 1.4 BAR set point)	3/8 NPT - 110 SCFM+ / 3105 SLPM 1/2 NPT - 110 SCFM+ / 3105 SLPM 3/4 NPT - 200 SCFM+ / 5645 SLPM 1 NPT - 200 SCFM+ / 5645 SLPM
Exhaust Capacity (based on raising output 5 psig / .34 BAR above 20 psig / 1.4 BAR set point)	30 scfm / 847 slpm
Temperature Range	-20˚ to +160˚F -29˚ to +71˚C
Weight	5.4 lbs / 2.45 Kg

Type 110 Ordering Information

	Part Number	Port Size (NPT)	Pressure Ranges BAR	Pressure Ranges psig
T110	960-510-000	3/8	0.1-1.7	2-25
	960-511-000		0.1-3.5	2-50
	960-512-000		0.1-7.6	2-110
	960-513-000	1/2	0.1-1.7	2-25
	960-514-000		0.1-3.5	2-50
	960-515-000		0.1-7.6	2-110
	960-516-000	3/4	0.1-1.7	2-25
	960-517-000		0.1-3.5	2-50
	960-518-000		0.1-7.6	2-110
	960-519-000	1	0.1-1.7	2-25
	960-520-000		0.1-3.5	2-50
	960-521-000		0.1-7.6	2-110

For BSPT or BSPP pipe threads, add BSPT or BSPP to the end of the part number. For mounting bracket, order P/N 607-293-000

Type 110 Materials of Construction

Body, bonnet and housing	Die Cast Zinc Alloy
Capsule and adjustable screw	Stainless Steel
Spacer	Aluminum
Diaphragm	Nitrile Elastomer and Polyester Fabric
Trim	Stainless Steel, Brass, Plated Steel, Acetal
Knob	Phenolic Plastic

Type 110: Forward Flow Curve, 3/4 and 1 NPT

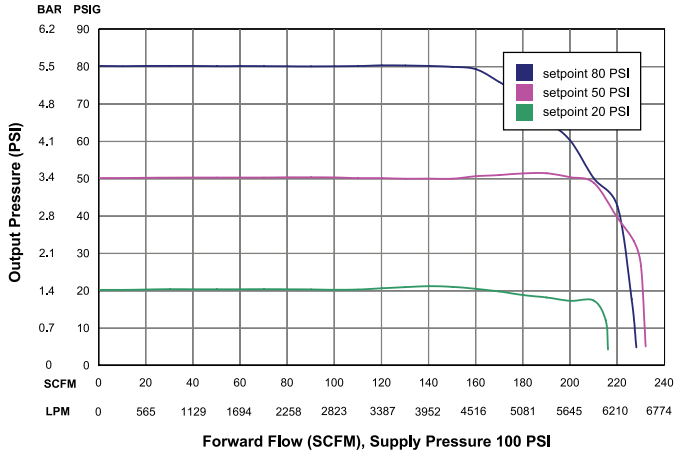

Type 110: Forward Flow Curve, 3/8 and 1/2 NPT

@ 100 PSIG Supply Pressure

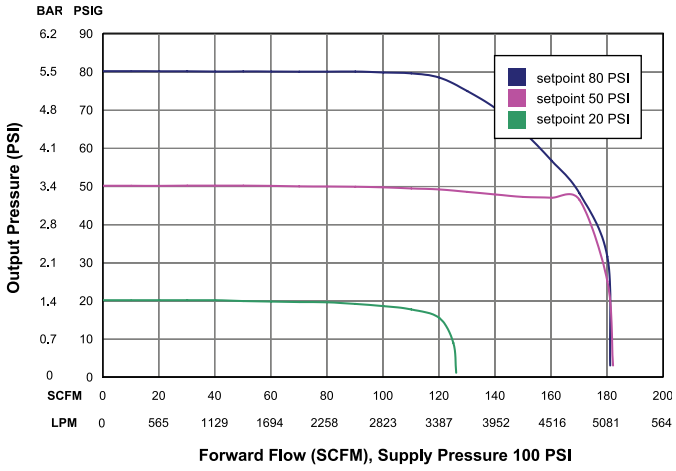

Type 110: Exhaust Curve

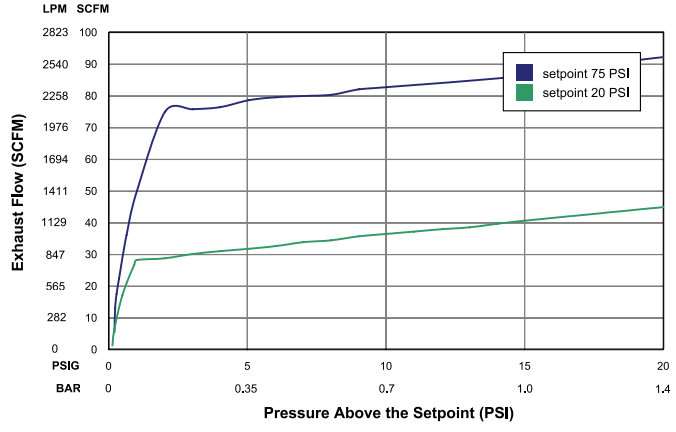

Type 40

Pressure Regulator Series



Features

- Superior regulation characteristics
- Rugged, corrosion resistant construction
- Low cost
- Excellent stability and repeatability
- Self-relieving
- Low droop at high flow
- Several mounting options

Type 40 Specifications

Sensitivity	1" Water Column (2.5 cm)
Flow Capacity @ 100 psig (6.9 BAR) Supply and 20 psig (1.4 BAR) outlet	20 SCFM (566 LPM)
Effect of Supply Pressure Variation (25 psig/1.7 BAR) on Outlet Pressure	Less than 0.2 psig (0.01 BAR)
Exhaust Capacity 5 psig (0.35 BAR) above 20 PSIG set point	0.1–0.45 SCFM Typical 2.8 - 12.7 LPM
Max Supply Pressure	250 PSIG (17.2 BAR)
Effect of Changes in Flow on Regulated Pressure (100 psig / 6.9 BAR Supply)	2 PSIG over flow of 10 SCFM / 283 LPM (0-30 PSIG / 0-2.1 BAR range 1/4 NPT, 20 PSIG / 1.4 BAR set point)
Output Pressure Ranges	0-10 PSIG (0-0.7 BAR) 0-35 PSIG (0-2.4 BAR) 0-60 PSIG (0-4.1 BAR) 0-120 PSIG (0-8.3 BAR)
Temperature Range	0-160˚F (-18 to 71˚C)
Total Air Consumption @ Maximum Output	6 SCFH (2.8 LPM)
Port Size	1/4 NPT, BSPT
Materials of Construction	Body: Die cast aluminum with vinyl paint Adjusting Screw: Plated steel Trim: Plated steel, brass, acetal resin Diaphragm: Buna-N elastomer and polyester fabric Knob: Phenolic Plastic (option) Spring: Music wire
Tamper Resistant Cover	Optional
Mounting Options	Pipe, Panel or Bracket

Type 40: Regulated Pressure VS. Flow

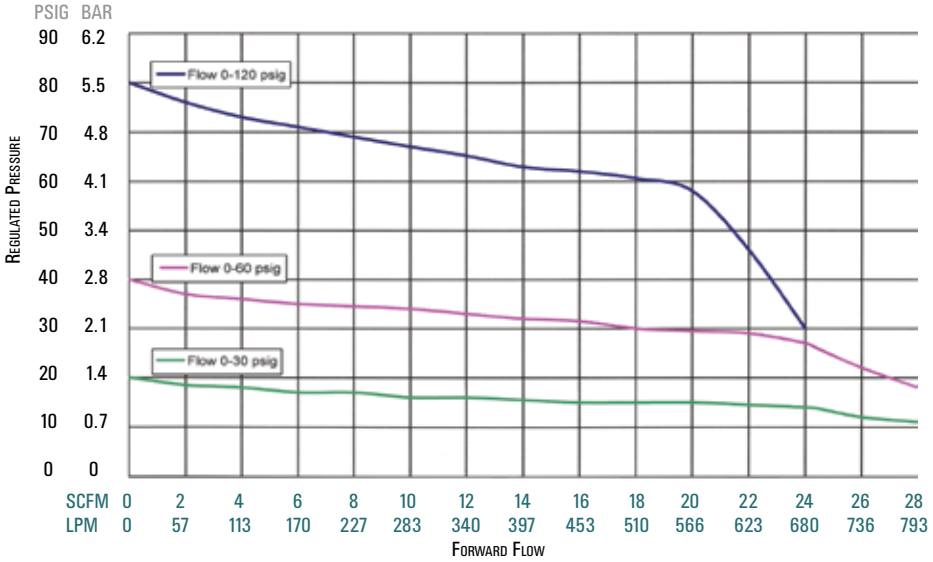



Type 40

Pressure Regulator Series

Description

Marsh Bellofram's General Purpose Type 40 Pressure Regulator is a reliable precision unit designed for instrumentation and general purpose use.

Test data for the Type 40 regulator shows excellent performance characteristics compared with those of similar units presently on the market. The Type 40 regulator is generally superior in regulated pressure vs. flow, forward-to-reverse flow offset, supply pressure sensitivity, repeatability and stability.

Ruggedly designed and constructed, the Type 40 has housings of diecast aluminum. Every regulator is finished with vinyl paint (which resists scratching, weathering and other physical abuse) and is pressure and leak tested prior to shipment from the factory. Careful design and quality materials throughout assure long, trouble-free operation in the most difficult industrial environments. A rubberized, soft-seat valve stem provides positive shut-off and "forgives" dirt or other foreign matter. An aspirator maintains downstream pressure and compensates for droop when high flow occurs. The gauge port is convenient for gauge installation and can also be used as an additional full flow outlet.

The Type 40 regulator has a 60-mesh 304 stainless steel screen to block foreign particles from entering the output stream. The design of these regulators is especially well suited to pilot-operated controllers and instruments, as well as applications such as air chucks, air spray guns, air cylinders and actuators, and a wide range of industrial pneumatic systems and equipment.

Type 40 Ordering Information

	Part Number	Port Size (NPT)	Set Point Range	
			BAR	psig
T40	960-063-000	1/4	0-0.7	0-10
	960-064-000		0-2.4	0-35
	960-065-000		0-4.1	0-60
	960-066-000		0-8.3	0-120

Type 40 Option Ordering Matrix

Replace last three digits of part number with digits from table below.

Option		1	2	3	5	6	7	8	9	10	11
1	Fluorocarbon Pintle	001	021	031	051	061	071	081	091	101	111
2	Non-Relieving		002	032	052		072	082	092		112
3	Knob			003	053	063	073	083		103	113
5	Epoxy Finish				005	065	075	085	095	105	115
6	Tapped Vent					006	076	086	096	106	116
7	Mounting Bracket						007	087	097	107	117
8	Pressure Gauge							008	098	108	118
9	Tamper-Resistant Cover								009	109	119
10	Soft Relief Seat									010	110
11	Fluorocarbon Diaphragm										011

To order BSPT threads (including the gauge port) add "BSPT" to end of part number.

Fluorocarbon Pintle

A special elastomeric pintle used where elements in the supply air, such as flame retardant synthetic lubricants, are particularly destructive to ordinary pintle material.

Non Relieving

Used in applications where it is desirable to relieve pressure downstream of the regulator, for some constant flow applications, and where the gas flowing through the regulator must not escape at the regulator. Non-relieving regulators should not be used for low or no flow applications.

Corrosive Resistant Epoxy Finish

An epoxy paint applied to the body and bonnet of the regulator exterior surfaces to provide increased corrosion resistance.

Mounting Bracket

Steel (dichromate finish) bracket for side mounting. P/N: 607-000-057

Knob

Option to replace the square head pressure adjusting screw.

Tapped Vent

Allows installation of plumbing to capture exhaust air.

Pressure Gauge

Dual scale 2 in. (50.8 mm) gauges. Ranges include 0-30 psig (0-200 kPa), 0-60 psig (0-400 kPa), 0-100 psig (0-700 kPa) and 0-160 psig (0-1100 kPa). When specified with regulator, the correct range will be supplied. For NPT versions only.

Tamper Resistant Cover

An aluminum tubular cover placed over a slotted head adjusting screw and screwed onto the bonnet of the regulator with a wrench. Prevents ordinary hand adjustments.

Type 40 Dimensional Drawing

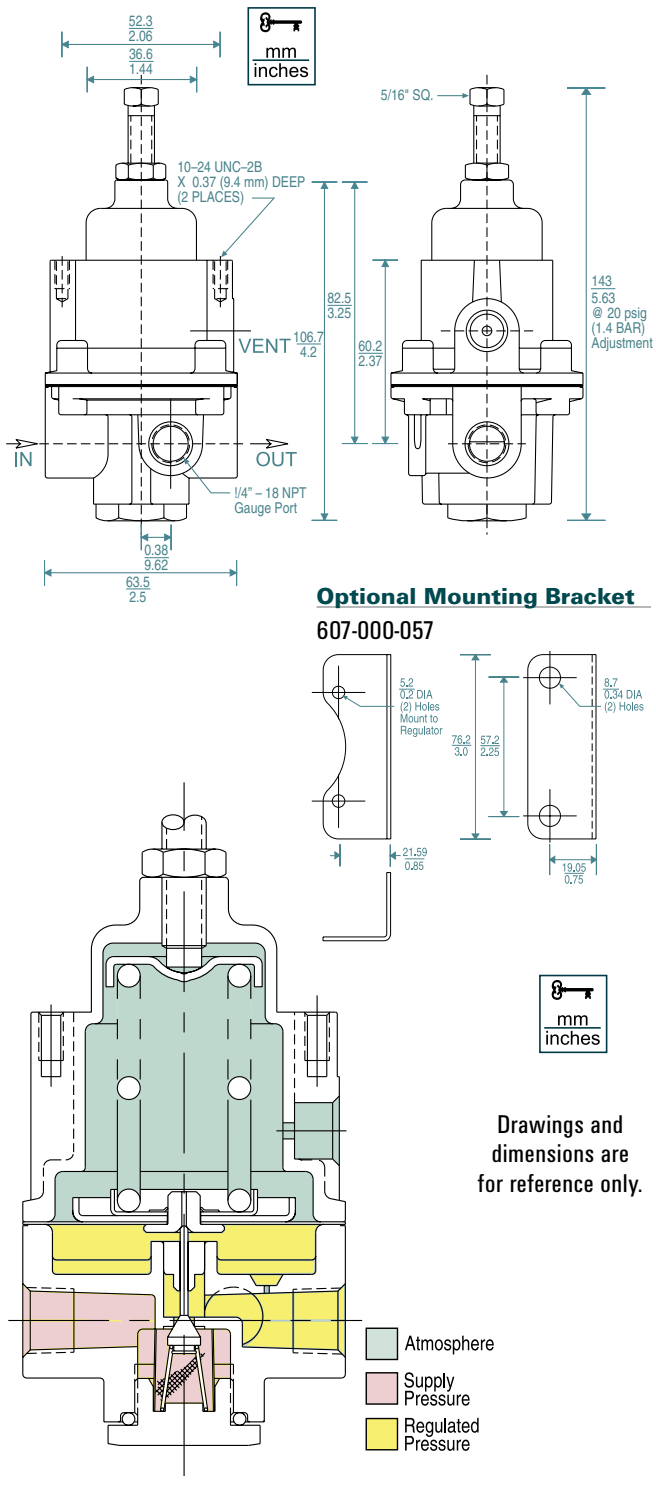

Soft Relief Seat

Used in applications where it is desirable to reduce the standard bleed rate from 6 SCFH [0.17 m^3hr] to less than 0.1 SCFH [0.003 m^3hr].

Fluorocarbon Diaphragm

Diaphragm as well as all seals are made of fluorocarbon elastomer to prevent deterioration from elements in the air supply, such as flame retardant synthetic lubricants normally destructive to standard Nitrile material.

Type 41-1 & Type 41-2

Pressure Regulator Series

Features

- Superior regulation characteristics
- Rugged, corrosion-resistant construction
- Excellent stability and repeatability
- Self-relieving of excess downstream pressure
- Low droop at high flow
- Mounting options available

Description

The Type 41 regulators are designed for applications requiring high flow capacity, low droop, high accuracy, and fine adjustment sensitivity. The use of Bellofram's rolling diaphragm provides greater sensitivity and improved accuracy. In addition, Type 41 regulators offer reduced overall size and several mounting options, providing direct interchangeability with more expensive competitors' units.

Ruggedly designed and constructed, the Type 41 regulators have housings of precision-cast aluminum. They are pressure tested, and are chromate treated for internal corrosion resistance. Every regulator is finished with vinyl paint which resists scratching, weathering and other physical abuse.

Careful design and quality materials throughout assure long, trouble-free operation in the most difficult industrial environments. A rubberized, soft-seat valve stem provides stability and "forgives" dirt and other foreign matter. An aspirator maintains downstream pressure and compensates for droop when high flow occurs. The gauge port is convenient for gauge installation and can also be used as an additional full flow outlet.

The design of these regulators is especially well suited for panel applications due to ease of mounting (only one panel hole required), small size, adjustment sensitivity (32 threads per inch on the adjusting screw), and knob.

Models

The Type 41 comes in two versions, Type 41-1 and Type 41-2. These two regulators offer the same performance in two slightly different packages.

Type 41-1

This unit comes standard with 1/4 NPT ports and a knob, and can be panel mounted using either the center nut or the threaded shoulder holes, spaced 1.5 in. (38.1 mm) center-to-center.

Type 41-2

This unit comes standard with 1/4 NPT ports, a knob and a bonnet vent port which can be tapped for a 1/4 NPT fitting if desired. It can be panel mounted using either the center nut or the threaded shoulder holes, spaced 1.25 in. (32.7 mm) center-to-center.





Type 41-1
Pressure Regulator Series



Type 41-2
Pressure Regulator Series

Type 41: Regulated Pressure VS. Flow

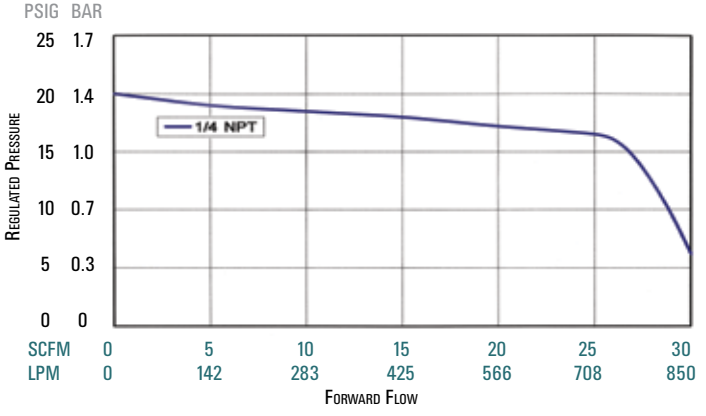

T41 Regulator Specifications

Sensitivity	1" Water Column (2.5 cm)
Flow Capacity @ 100 psig (6.9 BAR) Supply and 20 psig (1.4 BAR) outlet	25 SCFM (700 LPM)
Effect of Supply Pressure Variation (25 psig/1.7 BAR) on Outlet Pressure	±0.35 PSIG (24 mBAR)
Exhaust Capacity 5 psig (0.35 BAR) above 20 psig set point	0.1–0.45 SCFM Typical 2.8 - 12.7 LPM
Max Supply Pressure	250 PSIG (17.2 BAR)
Effect of Changes in Flow on Regulated Pressure (100 psig / 6.9 BAR Supply)	1 psig (0.07 BAR) over flow of 10 SCFM (0-30 psig / 0-2.1 BAR range, 1/4 NPT, 20 psig / 1.4 BAR set point)
Output Pressure Ranges	0-2 PSIG (0-0.14 BAR) 0-10 PSIG (0-0.69 BAR) 0-30 PSIG (0-2.1 BAR) 0-60 PSIG (0-4.1 BAR) 0-100 PSIG (0-6.9 BAR)
Temperature Range	0-160˚F (-18 to 71˚C)
Total Air Consumption @ Maximum Output	6 SCFH (2.8 LPM)
Port Size	1/4 NPT, BSPT
Materials of Construction	Body: Die cast aluminum with vinyl paint Adjusting Screw: Plated steel Trim: Plated steel, brass, acetal resin Diaphragm: Buna-N polyester fabric Knob: Phenolic Plastic Spring: Music wire
Mounting Options	Pipe, Panel or Bracket

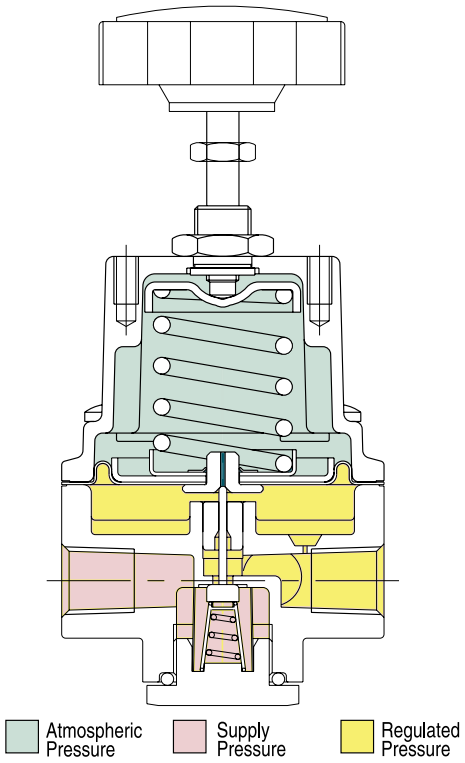

Type 41-1 Dimensional Drawing

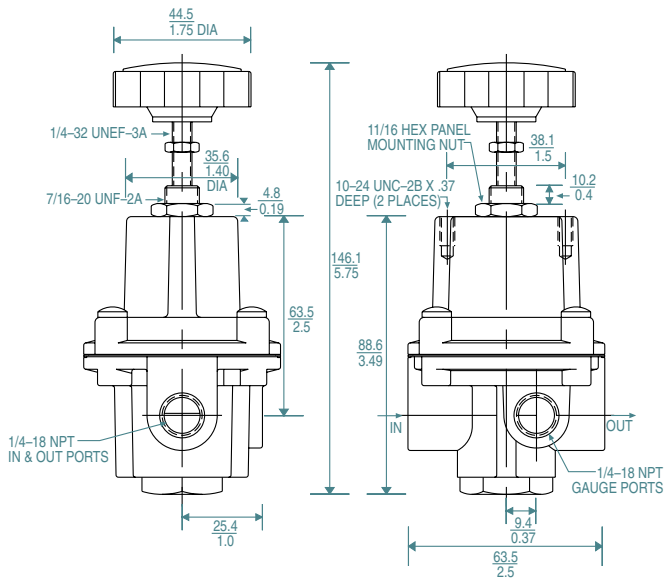

Type 41-2 Dimensional Drawing

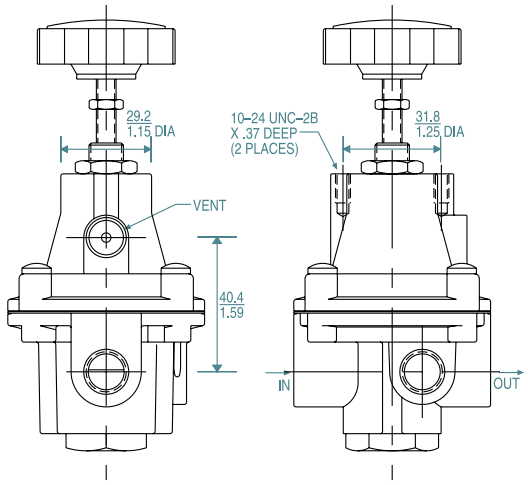

Optional Mounting Bracket

607-000-057

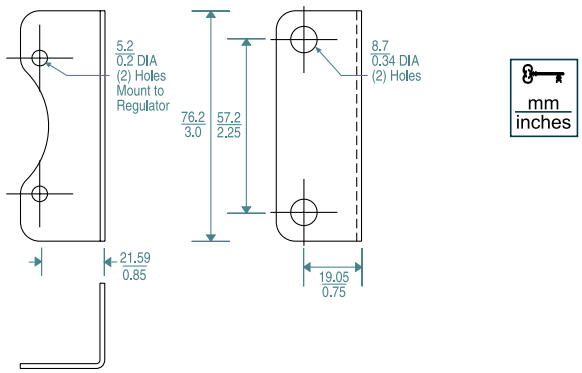

Type 41 Ordering Information

	Part Number	Port Size (NPT)	Set Point Range	
			BAR	psig
T41-1	960-113-000	1/4	0-0.14	0-2
	960-114-000		0-0.69	0-10
	960-170-000		0-2.1	0-30
	960-171-000		0-4.1	0-60
	960-172-000		0-6.9	0-100
T41-2	960-115-000	1/4	0-0.14	0-2
	960-116-000		0-0.69	0-10
	960-181-000		0-2.1	0-30
	960-182-000		0-4.1	0-60
	960-183-000		0-6.9	0-100

Type 41 Options

• = option is available		T41-1	T41-2
1	Fluorocarbon Pintle	•	•
2	Non-Relieving	•	•
5	Epoxy Finish	•	•
6	Tapped Vent	n/a	•
7	Mounting Bracket	•	•
8	Pressure Gauge	•	•

Type 41 Option Ordering Matrix

Replace last three digits of part number with digits from table below.

Option		1	2	5	6	7	8
1	Fluorocarbon Pintle	001	021	051	061	071	081
2	Non-Relieving		002	052	062	072	082
5	Epoxy Coating			005	065	075	085
6	Tapped Vent				006	076	086
7	Mounting Bracket					007	087
8	Pressure Gauge						008

Type 41 Regulator Options and Accessories

Fluorocarbon Pintle

A special elastomeric pintle used where elements in the supply air, such as flame retardant synthetic lubricants, are particularly destructive to ordinary pintle material.

Non-Relieving

Used in applications where it is desirable to relieve pressure downstream of the regulator, for some constant flow applications, and where the gas flowing through the regulator must not escape at the regulator. Non-relieving regulators should not be used for low or no flow applications.

Corrosive Resistant Epoxy Finish

An epoxy paint applied to the outside surface of the regulator to provide increased resistance to corrosive environments.

Tapped Vent (41-2 only)

Allows installation of plumbing to capture exhaust air.

Mounting Bracket

Steel (dichromate finish) bracket for side mounting. P/N: 607-000-057

Pressure Gauge

Dual scale 2 in. (50.8 mm) gauges. Ranges include 0-30 psig (0-200 kPa), 0-60 psig (0-400 kPa), 0-100 psig (0-700 kPa) and 0-160 psig (0-1100 kPa). When specified with regulator, the correct range will be supplied.

Type 50 & Type 50 NACE

Filter Regulator Series

Features

- Superior regulation characteristics
- Rugged, corrosion-resistant construction
- Excellent stability and repeatability
- Self-relieving
- Integral, 40 micron, self cleaning filter
- Low droop at high flow
- Several mounting options
- Meets ATEX ⟨Ex⟩ II 2 G Dc T 6 (Non-electrical certification)





Applications

The design of these regulators is well suited to pilot-operated controllers, and instruments, applications such as air chucks, air spray guns, air cylinders and actuators, and a wide range of industrial pneumatic systems and equipment.





Description

Marsh Bellofram's General Purpose Type 50 and Type 50 NACE Filter Regulators are reliable precision units designed for instrumentation and general purpose use in both standard environments (Type 50), and corrosive environments (Type 50 NACE). The Type 50 NACE complies with NACE material requirement #MR0175 for sulfide stress cracking resistant metallic material for oil field equipment.

Test data for these regulators show excellent performance characteristics compared with those of similar units presently on the market. These Marsh Bellofram regulators are generally superior in regulated pressure vs. flow, forward-to-reverse flow offset, supply pressure sensitivity, repeatability and stability.

The Type 50 NACE is available for use in corrosive environments. This complies with NACE material requirement #MR0175 for sulfide stress cracking resistant metallic material for oil field equipment.

Ruggedly designed and constructed, the regulators have housings of diecast aluminum. The Type 50 Regulator is finished with vinyl paint (which resists scratching, weathering and other physical abuse), while the Type 50 NACE is finished with epoxy paint for added protection. Both models are pressure and leak tested prior to shipment from the factory.

Careful design and quality materials throughout assure long, trouble-free operation in the most difficult industrial environments. A rubberized, soft-seat valve stem provides positive shut-off and "forgives" dirt or other foreign matter. An aspirator maintains downstream pressure and compensates for droop when high flow occurs. The gauge port is convenient for gauge installation and can also be used as an additional full flow outlet. The Type 50 regulators include a unique self-cleaning 40 micron nylon mesh filter (316 stainless steel in the Type 50 NACE) that can be easily removed.

Type 50 and 50 NACE Specifications

	Type 50	Type 50 NACE
Sensitivity	1" Water Column (2.5 cm)	1" Water Column (2.5 cm)
Flow Capacity @ 100 PSIG (6.9 BAR) Supply and 20 PSIG (1.4 BAR) outlet	20 SCFM (566 LPM)	18 SCFM (510 LPM)
Effect of Supply Pressure Variation (25 PSIG/1.7 BAR) on Outlet Pressure	< 0.2 psig (0.01 BAR)	< 0.2 PSIG (0.01 BAR)
Exhaust Capacity 5 psig (0.35 BAR) above 20 psig set point	0.1–0.45 SCFM Typical (2.8 - 12.7 LPM)	0.1–0.45 SCFM Typical (2.8 - 12.7 LPM)
Maximum Supply Pressure	250 PSIG (17.2 BAR)	250 PSIG (17.2 BAR)
Effect of Changes in Flow on Regulated Pressure (100 PSIG / 6.9 BAR Supply)	4 PSIG / 0.3 BAR over flow of 10 SCFM / 283 LPM (1/4 NPT, 20 PSIG / 1.4 BAR set point)	5 PSIG / 0.3 BAR over flow of 10 SCFM / 283 LPM (1/4 NPT, 20 psig / 1.4 BAR set point)
Output Pressure Ranges	0-10 PSIG (0-0.7 BAR) 0-35 PSIG (0-2.4 BAR) 0-60 PSIG (0-4.1 BAR) 0-120 PSIG (0-8.3 BAR)	0-30 PSIG (0-2.1 BAR) 0-60 PSIG (0-4.1 BAR) 0-120 PSIG (0-8.3 BAR)
Temperature Range	0-160˚F (-18 to 71˚C)	-20 to 180˚F (-29 to 82˚C)
Total Air Consumption @ Maximum Output	6 SCFH (2.8 LPM)	6 SCFH (2.8 LPM)
Port Size	1/4 NPT, BSPT	1/4 NPT, BSPT
Size	3.19" X 3.19" X 7.25" (81 X 81 X 184 mm)	3.19" X 3.19" X 7.25" (81 X 81 X 184 mm)
Weight	1.81 lb. (0.8 kg)	1.81 lb. (0.8 kg)
Materials of Construction	Body: Die cast aluminum with vinyl paint Adjusting Screw: Plated steel Trim: Plated Steel, Brass, Acetal Resin Diaphragm: Buna-N Elastomer and Polyester Fabric Knob: Phenolic Plastic (option) Spring: Music wire	Body: Die cast aluminum with epoxy paint Adjusting Screw: Stainless steel Trim: Stainless steel, Neoprene, EPDM Diaphragm: Neoprene, Polyester Fabric Spring: Inconel
Tamper Resistant Cover	Yes	Yes
Mounting Options	Pipe, Panel, Bracket or Thru Body Holes	Pipe, Panel, Bracket or Thru Body Holes

Type 50: Regulated Pressure VS. Flow

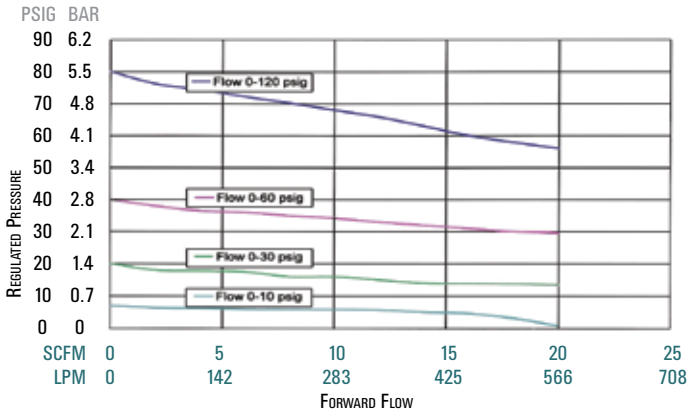

Type 50 NACE: Regulated Pressure VS. Flow

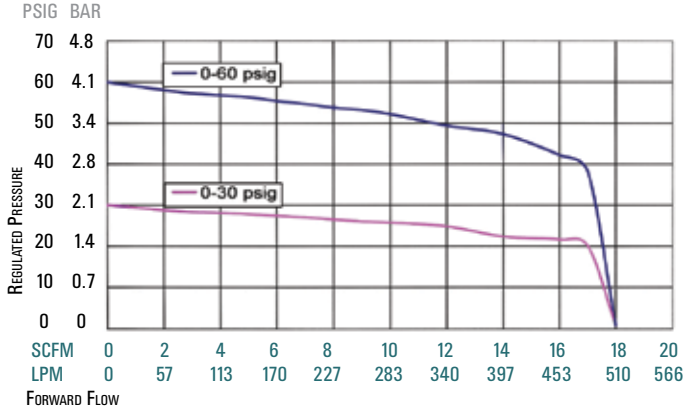

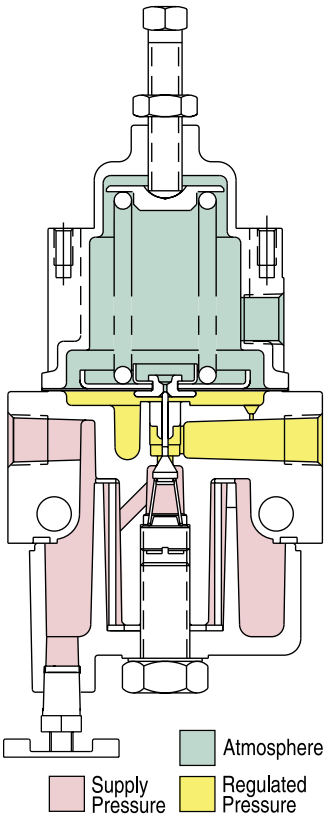

Type 50 Dimensional Drawing

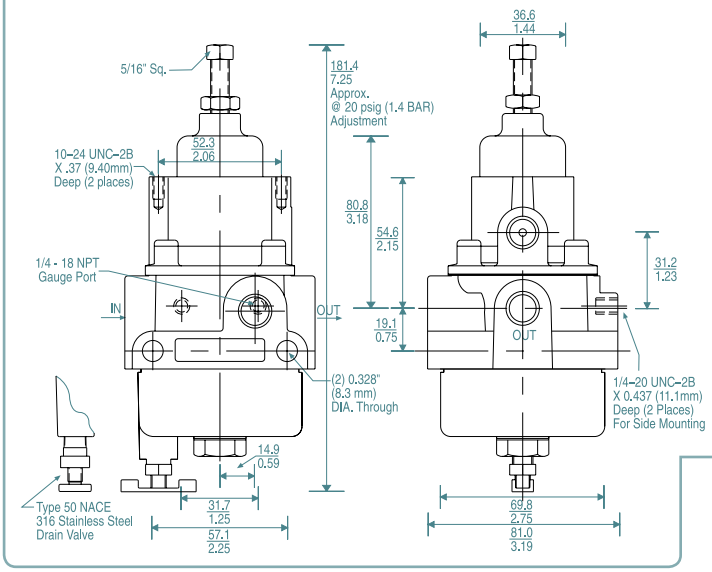

Optional Mounting Bracket

607-000-057

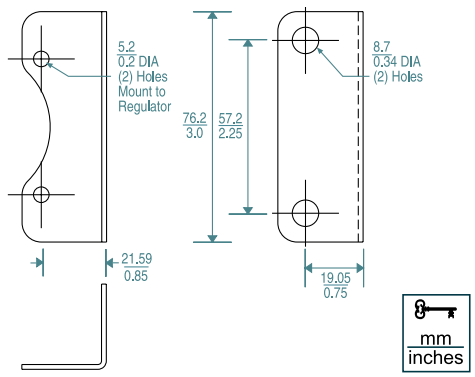

Type 50 Ordering Information

	Part Number	Port Size (NPT)	Set Point Range	
			BAR	PSIG
T50	960-062-000	1/4	0-0.7	0-10
	960-067-000		0-2.4	0-35
	960-068-000		0-4.1	0-60
	960-069-000		0-8.3	0-120
T50 NACE	960-300-000	1/4	0-2.1	0-30
	960-301-000		0-4.1	0-60
	960-302-000		0-8.3	0-120

Type 50 Option Ordering Matrix

Replace last three digits of part number with digits from table below.

Option		1	2	3	4	5	6	7	8	9	10	11
1	Fluorocarbon Pintle	001	021	031	041	051	061	071	081	091	101	111
2	Non-Relieving		002	032	042	052		072	082	092		112
3	Knob			003	043	053	063	073	083		103	113
4	5 Micron Filter				004	054	064	074	084	094	104	114
5	Epoxy Finish					005	065	075	085	095	105	115
6	Tapped Vent						006	076	086	096	106	116
7	Mounting Bracket							007	087	097	107	117
8	Pressure Gauge								008	098	108	118
9	Tamper-Resistant Cover									009	109	119
10	Soft Relief Seat										010	110
11	Fluorocarbon Diaphragm											011

Type 50 Regulator Options and Accessories

Fluorocarbon Pintle

A special elastomeric pintle used where elements in the supply air, such as flame retardant synthetic lubricants, are particularly destructive to ordinary pintle material.

Non Relieving

Used in applications where it is desirable to relieve pressure downstream of the regulator, for some constant flow applications, and where the gas flowing through the regulator must not escape at the regulator. Non-relieving regulators should not be used for low or no flow applications.

Knob

Option to replace the square head pressure adjusting screw.

5 Micron Filter

Replaces the 40 micron filter supplied with the standard Type 50 for more complete air filtration.

Corrosive Resistant Epoxy Finish

An epoxy paint applied to the body and dripwell of the regulator exterior surfaces to provide increased corrosion resistance. (Standard with Type 50 NACE)

Tapped Vent

Allows installation of plumbing to capture exhaust air. (Standard with T-50 NACE)

Mounting Bracket: Type 50

Steel (dichromate finish) bracket for side mounting.

Type 50 NACE

Stainless Steel bracket for side mounting.

Pressure Gauge: Type 50

Dual scale 2 in. (50.8 mm) gauges. Ranges include 0-30 PSIG (0-200 kPa), 0-60 PSIG (0-400 kPa), 0-100 PSIG (0-700 kPa) and 0-160 PSIG (0-1100 kPa). When specified with regulator, the correct range will be supplied.

Type 50 NACE

A dual scale, 0-60 PSIG (0-400 kPa) P/N 625-000-016, or 0-200 PSIG (0-1400 kPa) P/N 625-000-018, 2.47" diameter (63mm) stainless steel pressure gauge is available. NOTE: Although the case is stainless steel, the internal components are not made of NACE qualified materials.

Tamper Resistant Cover

An aluminum tubular cover placed over a slotted head adjusting screw and screwed onto the bonnet of the regulator with a wrench. Prevents ordinary hand adjustments. Supplied with an o-ring that is designed to seal the adjusting screw threads in capture bleed applications.

Soft Relief Seat

Used in applications where it is desirable to reduce the standard bleed rate from 6 SCFH [0.17 m3hr] to less than 0.1 SCFH [0.003 m3hr].
(Not available with Type 50 NACE)

Fluorocarbon Diaphragm

Diaphragm as well as all seals are made of fluorocarbon elastomer to prevent deterioration from elements in the air supply, such as flame retardant synthetic lubricants normally destructive to standard Buna-N material.

To order BSPT add "BSPT" to end of part number.

Type 51

Pressure Regulator Series

Features

- Excellent regulation, stability and repeatability
- Corrosion-resistant construction (no brass components, Type 51FR and Type 51AFR)
- NACE Constructed (Type 51FRCT Corrosive Tec)
- Low droop
- Small package size
- Panel, bracket or pipe mounting
- Fluorocarbon pintle seat (Type 51FR, Type 51AFR and Type 51FRCT)
- Automatic drain option (Type 51AFR)
- Meets ATEX Ⓔx II 2 G Dc T 6 (Non-electrical certification)

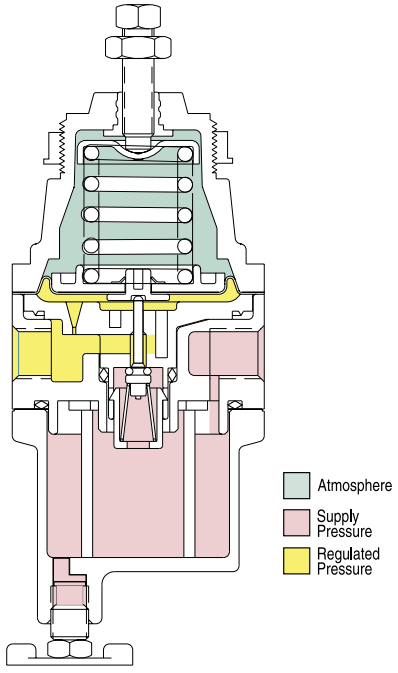

Description

The Bellofram Type 51 Precision Air Regulator series offers a high-performance regulator in a compact, low cost package. It operates in output pressure ranges up to 100 PSIG / 6.9 BAR (120 PSIG / 8.3 BAR in T-51FR Corrosive Tec), with a maximum supply pressure of 250 psi (17.3 BAR).

Materials of Construction for Standard Type 51 Series Regulators

Diecast aluminum for the body and dripwell; glass-reinforced thermoplastic polyester for the bonnet; acetal resin for the internals; BUNA-N for the diaphragm, gaskets and O-ring, fluorocarbon for the pintle seat, and aluminum for the drain valve (plated steel handle).

Materials of Construction for Corrosive Tec Type 51FRCT

Aluminum alloy bonnet, body, and filter bowl, 316 stainless steel internals, Inconel alloy range spring, nitrile diaphragm (fluorocarbon optional), 316 stainless steel valve assembly, and finished with an epoxy paint. All metallic parts for this unit conform to NACE material requirements #MR0175.

Materials of Construction for Wide Temperature Range 51FRWT

Aluminum alloy bonnet, body, and filter bowl, acetal resin, plated steel and aluminum internals. Nitrile diaphragm and finished with an vinyl paint.





From industry to industry, Marsh Bellofram's Type 51 Series of Regulators offer a low-cost, high performance option for a wide range of applications.

Type 51 Options

	• = option is available s = option is standard	Type 51FRWT	Type 51R	Type 51FR	Type 51AFR	Type 51FRCT
1	Fluorocarbon Pintle		•	s	s	s
2	Non-Relieving	•	•	•	•	•
3	Knob Sq. Head Adj. Screw	•	• s	• s	• s	 s
4	5 Micron Filter			•	•	•
5	Epoxy Finish	•	•	•	•	s
6	Tapped Vent Coalescing Filter	•			 •	s
7	Mounting Bracket	•	•	•	•	•
8	Pressure Gauge	•	•	•	•	•
9	Tamper Resistant Cover Panel Nut Mount	•	 s	 s	 s	•
10	Low Bleed					•
11	Fluorocarbon Diaphragm		•	•	•	•

These regulators are available standard (Type 51R) or as filter-regulators (Type 51FR and Type 51FRCT) and are even available with an automatic drain, for automated flushing out of contaminants (Type 51 AFR). These versatile regulators provide excellent regulation for a wide range of applications, including pneumatic instruments, controllers, chucks, and actuators. They can be through-panel mounted with the supplied mounting nut, bracket-mounted with the optional bracket or, due to their light weight, mounted by their ports. The Corrosive Tec is supplied with a tapped bonnet vent, to allow for the capture of exhaust air.

	Type 51R	Type 51FR Filter and Type 51AFR Auto Filter	Type 51FRCT Corrosive Tec	Type 51FRWT
Maximum Supply Pressure	250 PSIG (17.3 BAR)	250 PSIG (17.3 BAR)	250 PSIG (17.3 BAR)	250 PSIG (17.3 BAR)
Output Pressure Range	0-30 PSIG (0-2.1 BAR) 0-60 PSIG (0-4.1 BAR) 0-100 PSIG (0-6.9 BAR)	0-30 PSIG (0-2.1 BAR) 0-60 PSIG (0-4.1 BAR) 0-100 PSIG (0-6.9 BAR)	0-30 PSIG (0-2.1 BAR) 0-60 PSIG (0-4.1 BAR) 0-120 PSIG (0-8.3 BAR)	0-30 PSIG (0-2.1 BAR) 0-60 PSIG (0-4.1 BAR) 0-120 PSIG (0-8.3 BAR)
Supply Pressure Sensitivity @ 25 psig / 1.7 BAR change in supply	0.20 PSIG (0.01 BAR) output change	0.45 PSIG (0.03 BAR) output change	0.45 PSIG (0.03 BAR) output change	0.45 PSIG (0.03 BAR) output change
Sensitivity	1" (2.5 cm) of water	1" (2.5 cm) of water	1" (2.5 cm) of water	1" (2.5 cm) of water
Repeatability	0.1 PSIG (0.01 BAR)	0.1 PSIG (0.01 BAR)	0.1 PSIG (0.01 BAR)	0.1 PSIG (0.01 BAR)
Flow @ 100 psig (6.9 BAR) Supply 20 psig (1.4 BAR) outlet	15 SCFM (425 LPM)	20 SCFM (566 LPM)	20 SCFM (566 LPM)	20 SCFM (566 LPM)
Exhaust Capacity @ 5 psig (0.34 BAR) above setpoint	0.1 SCFM (2.8 LPM)	0.1 SCFM (2.8 LPM)	0.1 SCFM (2.8 LPM)	0.1 SCFM (2.8 LPM)
Temperature Range	-0 to 125˚F (-18 to 52˚C)	-0 to 125˚F (-18 to 52˚C)	0 to 180˚F (-18 to 82˚C)	-40 to 185˚F (-40 to 85˚C)
Air Consumption	6 SCFH (2.84 LPM) Maximum	6 SCFH (2.84 LPM) Maximum	6 SCFH (2.84 LPM) Maximum	6 SCFH (2.84 LPM) Maximum
Port Size	1/4 NPT	1/4 NPT	1/4 NPT	1/4 NPT
Materials of Construction	Aluminum, Plated Steel, Brass, Acetal Resin, Buna-N /Polyester, Music Wire	Aluminum, Plated Steel, Acetal Resin, Buna-N / Polyester, Music Wire, Fluorocarbon	Aluminum, Stainless Steel, Inconel, Buna-N / polyester, Fluorocarbon, acetal, polyphenylene sulfide	Aluminum, Plated Steel, Acetal Resin, Buna-N /Polyester, Music Wire

Type 51R, 51FR, 51AFR and 51FRCT Dimensional Drawings

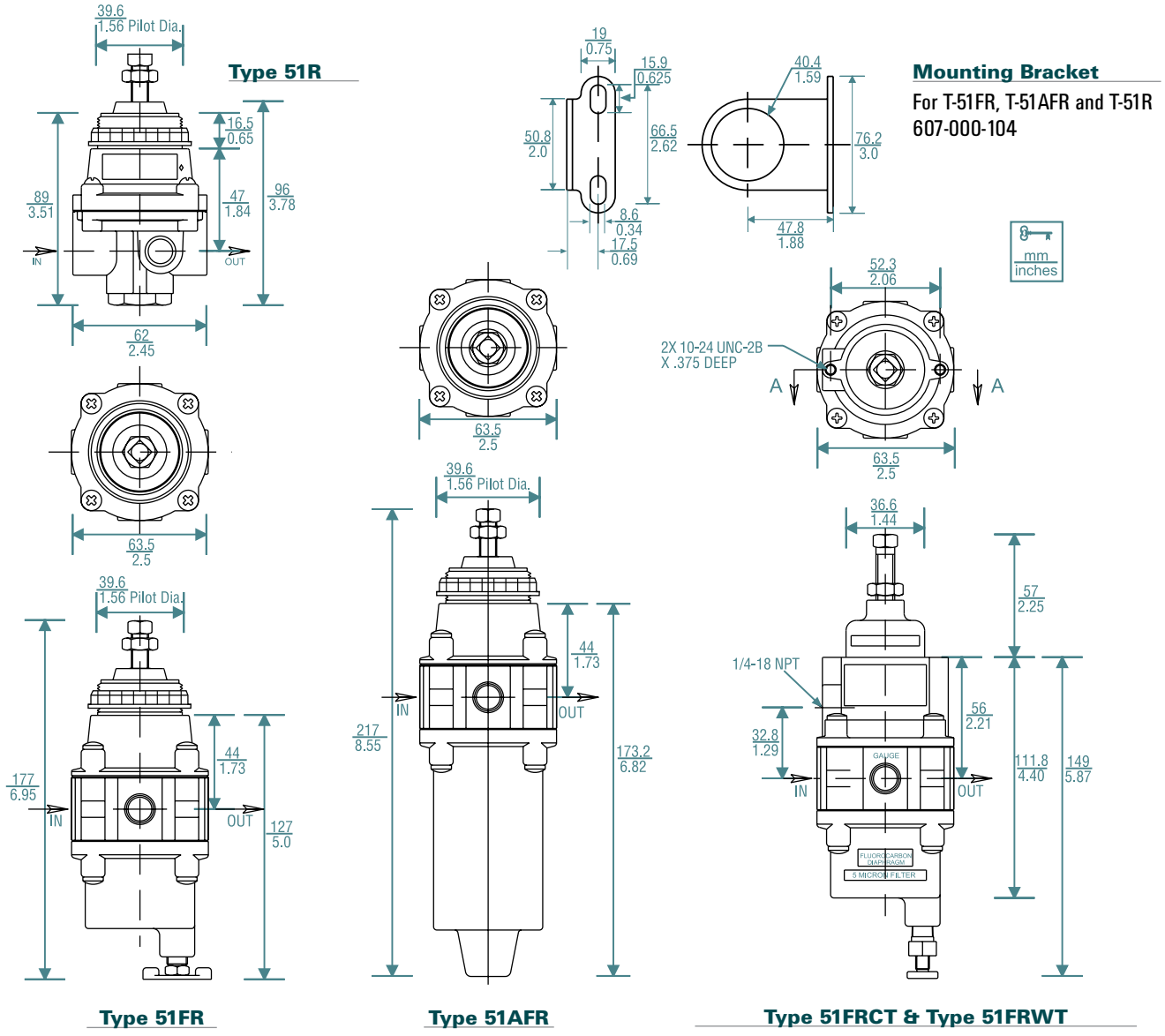

Type 51 Ordering Information

	Part Number	Port Size (NPT)	Set Point Range	
			BAR	psig
T51R	960-222-000	1/4	0-2.1	0-30
	960-223-000		0-4.1	0-60
	960-224-000		0-6.9	0-100
T51FR	960-175-000	1/4	0-2.1	0-30
	960-176-000		0-4.1	0-60
	960-177-000		0-6.9	0-100
T51AFR	960-284-000	1/4	0-2.1	0-30
	960-285-000		0-4.1	0-60
	960-286-000		0-6.9	0-100
T51 FRCT	960-303-000	1/4	0-2.1	0-30
	960-304-000		0-4.1	0-60
	960-305-000		0-8.3	0-120
T51 FRWT	960-048-000	1/4	0-2.1	0-30
	960-049-000		0-4.1	0-60
	960-050-000		0-8.3	0-120

Type 51 Option Ordering Matrix

Replace last three digits of part number with digits from table below.

Option		1	2	3	4	5	6	7	8	9	10	11
1	Fluorocarbon Pintle	001	021	031	041	051	061	071	081	091	101	111
2	Non-Relieving		002	032	042	052	062	072	082	092		112
3	Knob			003	043	053	063	073	083		103	113
4	5 Micron Filter				004	054		074	084	094	104	114
5	Epoxy Finish					005	065	075	085	095	105	115
6	Coalescing Filter (Type 51AFR only)						006	076	086	096	106	116
7	Mounting Bracket							007	087	097	107	117
8	Pressure Gauge								008	098	108	118
9	Tamper-Resistant Cover									009	109	119
10	Soft Relief Seat										010	110
11	Fluorocarbon Diaphragm											011



Type 51 Regulator Options and Accessories

Non-Relieving

Used in applications where it is desirable to relieve pressure downstream and not at the regulator. Non-relieving regulators should not be used for low or no flow applications.

Knob

Replaces the standard square head adjusting screw. (except Type 51FRCT)

5 Micron Filter

Replaces the 40 micron filter for more complete air filtration. (Except Type 51R)

Epoxy Finish

An epoxy paint applied to the body and dripwell of the regulator exterior surfaces to provide increased corrosion resistance. (Standard for Type 51FRCT)

Mounting Bracket

Plated steel bracket for side mounting. (316 SS for Type 51FRCT)

Coalescing Filter

Replaces the 40 micron filter for both moisture and particulate filtration. (Type 51AFR only)

Pressure Gauge

Dual scale (psi/kPa) 2" (50mm) gauges. Ranges include 0-60 psi (0-4.1 BAR), 0-100 psi (0-6.9 BAR) and 0-160 psi (0-11 BAR). When specified with regulator, the correct range will be supplied.

Fluorocarbon Elastomers

Diaphragm, as well as gaskets and O-rings, are made with a special elastomer to prevent deterioration from elements in the air supply, such as flame retardant synthetic lubricants normally destructive to the standard BUNA-N material.

Tamper Resistant Cover

A 316 stainless steel hexagonal cover placed over the adjusting screw and threaded onto the bonnet of the regulator with a wrench, prevents ordinary hand adjustments. Supplied with an O-ring that is designed to seal the adjusting screws threads in captured bleed applications. (T-51FRCT and T-51FRWT)

Low Bleed Diaphragm

Used in applications where it is desirable to minimize the standard bleed rate of the regulator while maintaining the ability to relieve excess pressure at the regulator. Bleed rate is reduced from less than 6 SCFH (2.8 LPM) to less than 0.1 SCFH (0.05 LPM). (Type 51FRCT only)

Type 52 Stainless Steel

Pressure Regulator Series

Features

- Ideal for sour gas and corrosive applications or environments
- Excellent stability and repeatability
- Low droop
- Tapped vent for exhaust gas capture
- Built-in filter assemblies and dripwells
- Manual or automatic drain options
- Panel, bracket or pipe mounting

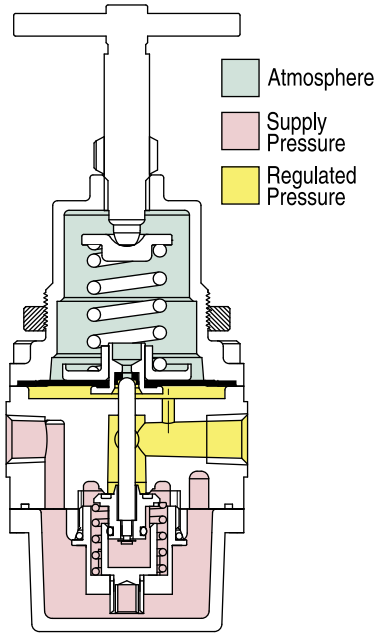



Type 52SS
Pressure Regulator Series



Description

The Type 52SS regulator product line is designed for service with a wide variety of corrosive gases and environments. Special construction features include 316 stainless steel for the housing and filter assemblies, with Nitrile Elastomers used for the control diaphragm and the supply valve.

These corrosion resistant materials are compatible with sour gas and for use in off-shore environments. Typical applications include petrochemical processing, chemical plants, food processing and paper/pulp mills.

This ruggedly built regulator operates in pressure ranges up to 150 PSIG (10 BAR). The Type 52SSFR and Type 52SSAR Regulators have built-in dripwells which trap water, oil and other contaminants. The contaminants are easily flushed out of the dripwell via a convenient manual or automatic drain valve. The 25 Micron Filter is constructed of sintered 316 stainless steel, and is easily removed.

The Type 52SS products can be through-panel mounted with the mounting nut supplied, bracket-mounted using the optional bracket, or pipe mounted by its ports.

The regulators and filter assemblies comply with NACE material requirement #MR0175 for sulfide stress cracking resistant metallic material for oil field equipment.

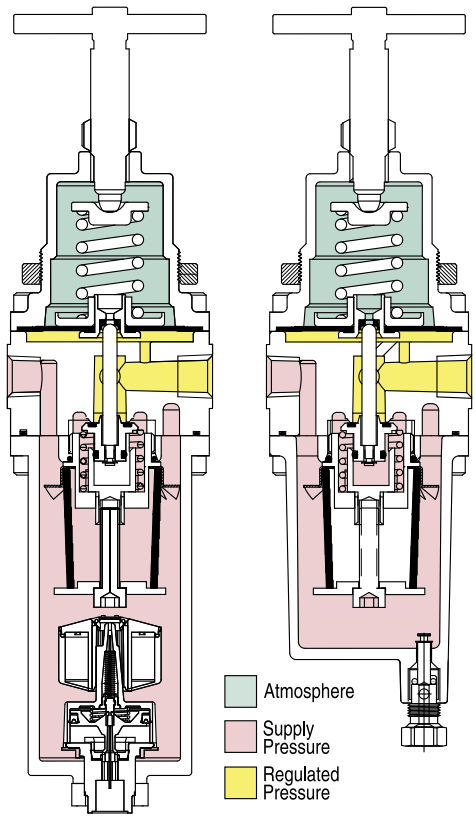

	Type 52SSR					Type 52SSFR				
Filter	n/a					Built in 25 micron filter with manual drain				
Maximum Supply Pressure	425 PSIG (29.3 BAR)					425 PSIG (29.3 BAR)				
Output Pressure Range	3 - 30 PSIG (.2 - 2.1 BAR) 6 - 60 PSIG (.4 - 4.1 BAR) 12 - 125 PSIG (.9 - 8.8 BAR) 15 - 150 PSIG (1 - 10 BAR)					3 - 30 PSIG (.2 - 2.1 BAR) 6 - 60 PSIG (.4 - 4.1 BAR) 12 - 125 PSIG (.9 - 8.8 BAR) 15 - 150 PSIG (1 - 10 BAR)				
Supply Pressure Sensitivity @ 25 psig / 1.7 BAR change in supply	± 1.0 PSIG (0.07 BAR) Output Change					± 1.0 PSIG (0.07 BAR) Output Change				
Repeatability	± 0.25 PSIG (0.02 BAR)					± 0.25 PSIG (0.02 BAR)				
Port Sizes (NPT)	1/4"	3/8"	1/2"	3/4"	1"	1/4"	3/8"	1/2"	3/4"	1"
Flow @ 100 psig (6.9 BAR) Supply 20 psig (1.4 BAR) outlet	38 scfm (1075 lpm)	42 scfm (1188 lpm)	95 scfm (2688 lpm)	105 scfm (2972 lpm)	400 scfm (11327 lpm)	38 scfm (1075 lpm)	42 scfm (1188 lpm)	95 scfm (2688 lpm)	105 scfm (2972 lpm)	400 scfm (11327 lpm)
Exhaust Capacity @ 5 psig (0.34 BAR) above setpoint	0.1 scfm (2.8 LPM)	0.1 scfm (2.8 lpm)	0.1 scfm (2.8 lpm)	0.1 scfm (2.8 lpm)	0.1 scfm (2.8 lpm)	0.1 scfm (2.8 lpm)	0.1 scfm (2.8 lpm)	0.1 scfm (2.8 lpm)	0.1 scfm (2.8 lpm)	0.1 scfm (2.8 lpm)
Temperature Range	-4 to 176˚F (-20 to 80˚C)					-4 to 176˚F (-20 to 80˚C)				
Air Consumption	0.5 SCFH (0.24 LPM) Maximum					0.5 SCFH (0.24 LPM) Maximum				
Materials of Construction	316 Stainless Steel housing and screen nitrile elastomers					316 Stainless Steel housing and filter assemblies nitrile elastomers				

Type 52SS Ordering Information

	1/4" Ports Part Number	3/8" Ports Part Number	1/2" Ports Part Number	3/4" Ports Part Number	1" Ports Part Number	Set Point Range	
						BAR	psig
T-52SSR	960-560-000	960-564-000	960-568-000	960-572-000	960-576-000	.2 - 2.1	3 - 30
	960-561-000	960-565-000	960-569-000	960-573-000	960-577-000	.4 - 4	6 - 60
	960-562-000	960-566-000	960-570-000	960-574-000	960-578-000	.9 - 8.8	12 - 125
	960-563-000	960-567-000	960-571-000	960-575-000	960-579-000	1 - 10	15 - 150
T-52SSFR	960-580-000	960-584-000	960-588-000	960-592-000	960-596-000	.2 - 2.1	3 - 30
	960-581-000	960-585-000	960-589-000	960-593-000	960-597-000	.4 - 4	6 - 60
	960-582-000	960-586-000	960-590-000	960-594-000	960-598-000	.9 - 8.8	12 - 125
	960-583-000	960-587-000	960-591-000	960-595-000	960-599-000	1 - 10	15 - 150
T-52SSAR	960-600-000	960-604-000	960-608-000	960-612-000	960-616-000	.2 - 2.1	3 - 30
	960-601-000	960-605-000	960-609-000	960-613-000	960-617-000	.4 - 4	6 - 60
	960-602-000	960-606-000	960-610-000	960-614-000	960-618-000	.9 - 8.8	12 - 125
	960-603-000	960-607-000	960-611-000	960-615-000	960-619-000	1 - 10	15 - 150

	Type 52SSAR Auto Filter				
Filter	Built in 25 micron filter with auto-drain				
Maximum Supply Pressure	425 psig (29.3 BAR)				
Output Pressure Range	3 - 30 PSIG (.2 - 2.1 BAR) 6 - 60 PSIG (.4 - 4.1 BAR) 12 - 125 PSIG (.9 - 8.8 BAR) 15 - 150 PSIG (1 - 10 BAR)				
Supply Pressure Sensitivity @ 25 psig / 1.7 BAR change in supply	± 1.0 PSIG (0.07 BAR) Output Change				
Repeatability	± 0.25 PSIG (0.02 BAR)				
Port Sizes (NPT)	1/4"	3/8"	1/2"	3/4"	1"
Flow @ 100 psig (6.9 BAR) Supply 20 psig (1.4 BAR) outlet	38 scfm (1075 lpm)	42 scfm (1188 lpm)	95 scfm (2688 lpm)	105 scfm (2972 lpm)	400 scfm (11327 lpm)
Exhaust Capacity @ 5 psig (0.34 BAR) above setpoint	0.1 scfm (2.8 lpm)	0.1 scfm (2.8 lpm)	0.1 scfm (2.8 lpm)	0.1 scfm (2.8 lpm)	0.1 scfm (2.8 lpm)
Temperature Range	-4 to 176˚F (-20 to 80˚C)				
Air Consumption	0.5 SCFH (0.24 LPM) Maximum				
Materials of Construction	316 Stainless Steel housing and filter assemblies Nitrile elastomers				



Regulator Options and Accessories

Non-Relieving

Used in applications where it is desirable to relieve pressure downstream and not at the regulator. Non-relieving regulators should not be used for low or no flow applications.

5 Micron Filter

Replaces the 25 micron filter for more complete air filtration. (Except Type 52SSR)

Mounting Bracket

316 Stainless Steel bracket for side mounting. P/N 607-309-000

Type 52SS Options

	• = option is available	T-52SSR	T-52SSFR	T-52SSAR
2	Non-Relieving	•	•	•
3	Hex Head Adjustment	•	•	•
4	5 Micron Filter		•	•

Type 52SS Option Ordering Matrix

Replace last three digits of part number with digits from table below. *

Option		2	3	4
2	Non-Relieving	002	032	042
3	Hex Head Adjustment		003	043
4	5 Micron Filter			004

* If ordering all three options (Non-relieving, Hex Head Adjustment Screw, and 5 Micron Filter) on the T-52SSFR or T-52SSAR, Use the code "432" in the last three digits of the part number.

Type 52SS Dimensional Drawings

TYPE 52SSSR 1/4" & 3/8"

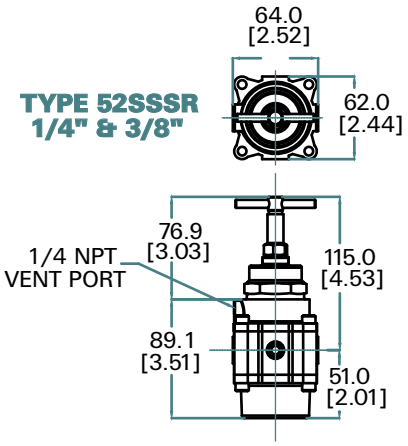

TYPE 52SSSR 1/2" & 3/4"

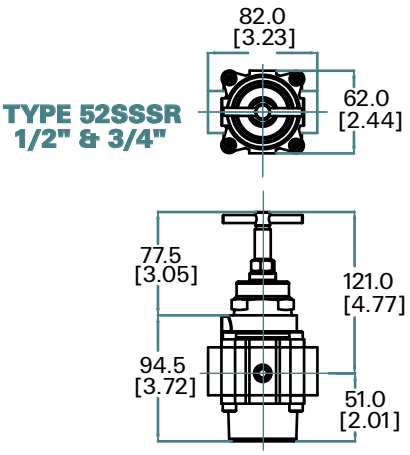

TYPE 52SSSR 1"

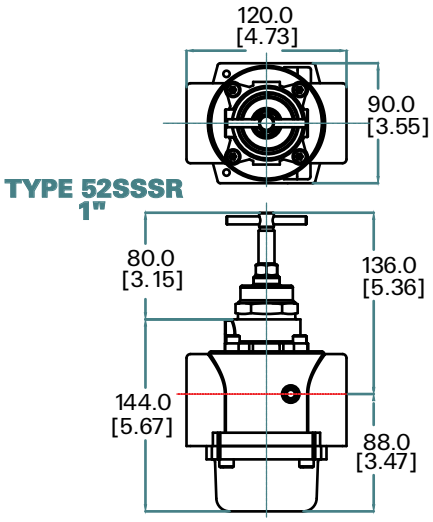

TYPE 52SSFR 1/4" & 3/8"

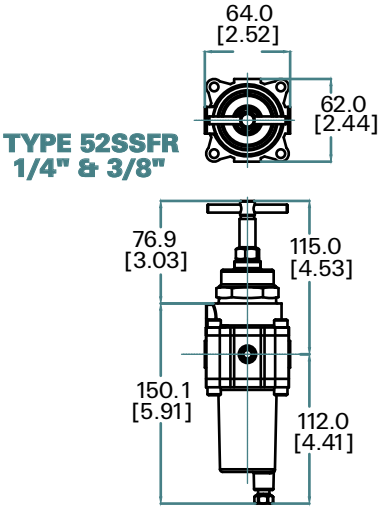

TYPE 52SSFR 1/2" & 3/4"

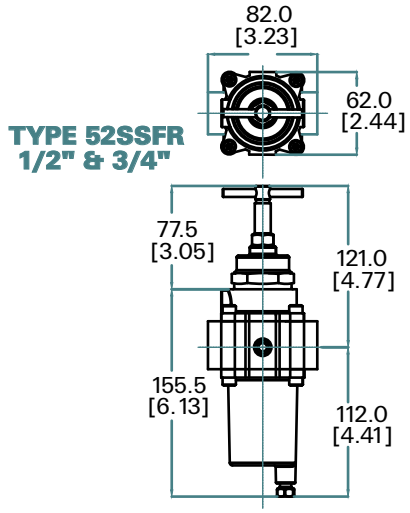

TYPE 52SSFR 1"

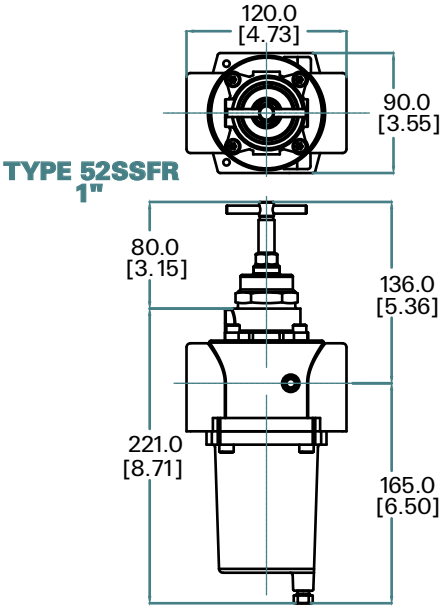

TYPE 52SSAR 1/4" & 3/8"

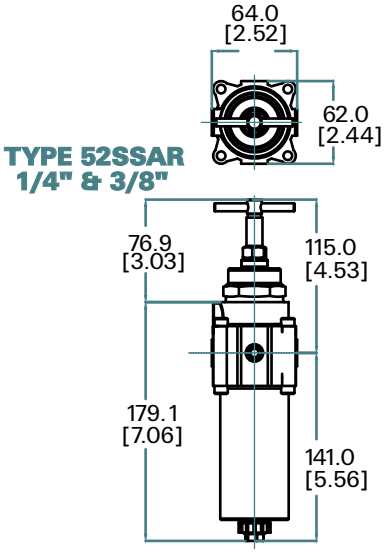

TYPE 52SSAR 1/2" & 3/4"

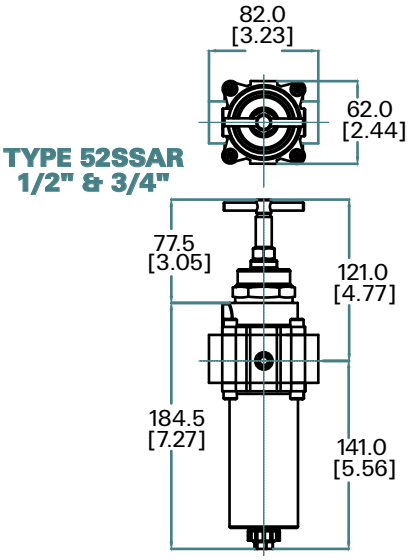

TYPE 52SSAR 1"

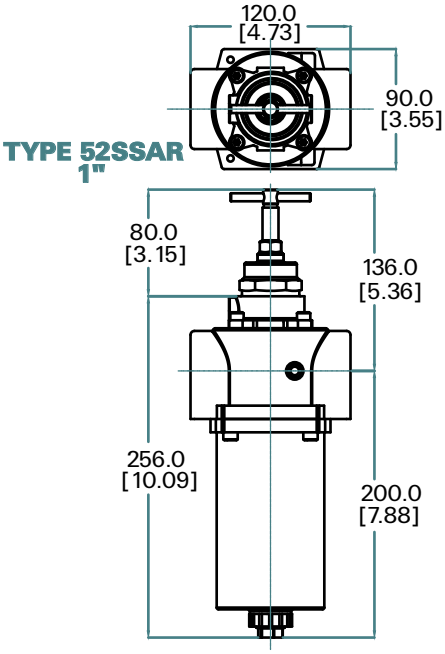

mm
inches

Type 60 & Type 65

Pre-set Pressure Regulators

Features

- Pre-Set, ideal for OSHA regulations
- Superior regulation characteristics
- Rugged, corrosion-resistant construction
- Excellent stability and repeatability
- Self-relieving
- Low droop at high flow
- Several mounting options
- Low cost

Applications

The design of these regulators is especially well suited to pilot-operated controllers, and instruments, as well as applications such as air chucks, air spray guns, air cylinders and actuators, and a wide range of industrial pneumatic systems and equipment.

Description

Marsh Bellofram's General Purpose Type 60 and Type 65 Precision Air Regulators are reliable precision units designed for instrumentation and general purpose use. The Type 60 is a pre-set, fixed-pressure unit with a dripwell. The Type 65 is similar to the Type 60, but without a dripwell.

Test data for these regulators show excellent performance characteristics compared with those of similar units presently on the market. These Marsh Bellofram regulators are generally superior in regulated pressure vs. flow, forward-to-reverse flow offset, supply pressure sensitivity, repeatability and stability.

Ruggedly designed and constructed, the regulators have housings of diecast aluminum. Both models are finished with vinyl paint (which resist scratching, weathering and other physical abuse), and are pressure and leak tested prior to shipment from the factory.

Careful design and quality materials throughout assure long, trouble-free operation in the most difficult industrial environments. A rubberized, soft-seat valve stem provides positive shut-off and "forgives" dirt or other foreign matter. An aspirator maintains downstream pressure and compensates for droop when high flow occurs. The gauge port is convenient for gauge installation and can also be used as an additional full flow outlet. The Type 65 regulator has a 60-mesh 304 stainless steel screen to block foreign particles from entering the output stream. The Type 60 regulator has a unique self-cleaning nylon 40 micron mesh filter that can be easily removed. Type 60 and Type 65 tamper resistant regulators meet OSHA requirements for air supplied to hand-held air guns (if preset to 30 psig).



Type 60 & 65
Pressure Regulator Series



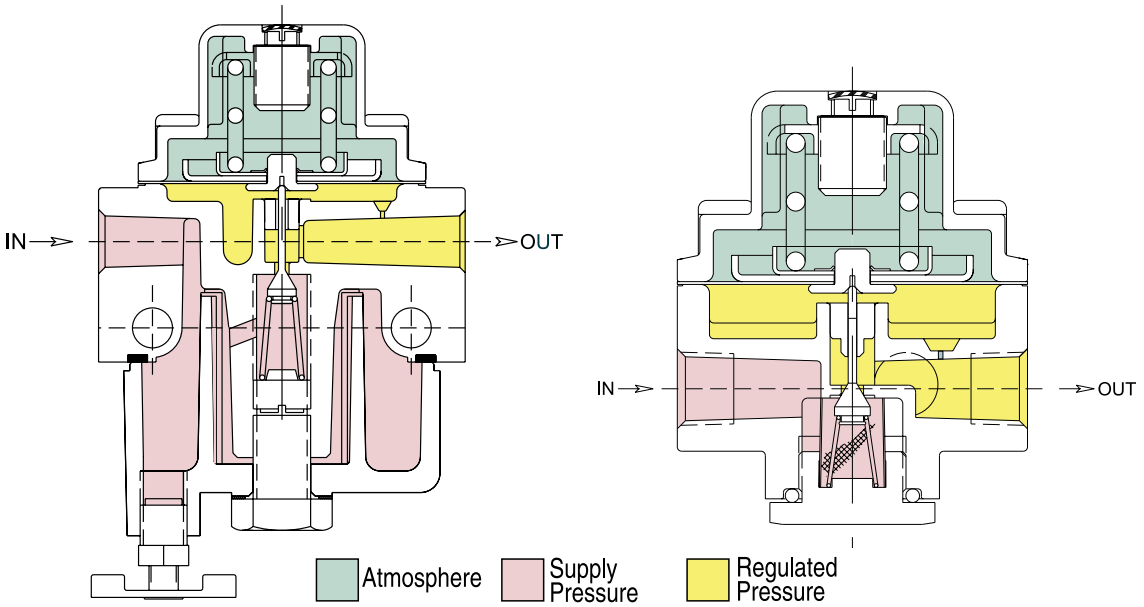

	Type 60	Type 65
Sensitivity	1" (2.5 cm) Water Column	1" (2.5 cm) Water Column
Flow @ 100 PSIG (6.9 BAR) Supply 20 PSIG (1.4 BAR) outlet	20 SCFM (566 LPM)	20 SCFM (566 LPM)
Effect of Supply Pressure variation (25 PSIG) on Outlet Pressure	< 0.2 PSIG (0.01 BAR) for 25 PSIG (1.7 BAR)	< 0.2 PSIG (0.01 BAR) for 25 PSIG (1.7 BAR)
Exhaust Capacity@ 5 psig above 20 PSIG setpoint	0.1 SCFM (2.8 LPM)	0.1 SCFM (2.8 LPM)
Maximum Supply Pressure	250 PSIG (17.3 BAR)	250 PSIG (17.3 BAR)
Effect of Changes in Flow on Regulated Pressure (100 PSIG/6.9 BAR Supply)	3 PSIG (0.2 BAR) for 10 SCFM (283 LPM) (1/4 NPT, 20 PSIG / 1.4 BAR set point)	3 PSIG (0.2 BAR) for 10 SCFM (283 LPM) (1/4 NPT, 20 PSIG / 1.4 BAR set point)
Output Pressure Range	0-20 PSIG (0-1.4 BAR) 20-40 PSIG (1.4-2.8 BAR) 40-60 PSIG (2.8-4.1 BAR)	0-20 PSIG (0-1.4 BAR) 20-40 PSIG (1.4-2.8 BAR) 40-60 PSIG (2.8-4.1 BAR)
Total Air Consumption @ Maximum Output	6 SCFH (2.84 LPM) Maximum	6 SCFH (2.84 LPM) Maximum
Port Size	1/4 NPT, BSPT	1/4 NPT, BSPT
Materials of Construction	Body: Diecast aluminum with vinyl paint Adjusting Screw: Plated steel Trim: Plated steel, brass, acetal resin Diaphragm: Buna-N elastomer with polyester fabric Spring: Music wire	Body: Diecast aluminum with vinyl paint Adjusting Screw: Plated steel Trim: Plated steel, brass, acetal resin Diaphragm: Buna-N elastomer with polyester fabric Spring: Music wire
Size	3.19" X 3.19" X 4.70" (81 X 81 X 119 mm)	2.5" X 2.5" X 3.13"
Weight	1.59 lb. (0.7 kg)	0.69 lb. (0.3 kg)
Mounting	Pipe, Bracket or Thru Body Holes	Pipe or Bracket

Type 60 and Type 65 Dimensional Drawings

mm
inches

Type 60

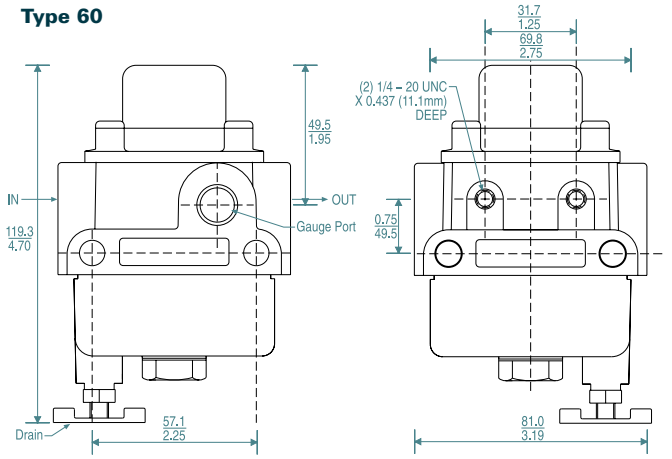

Type 65

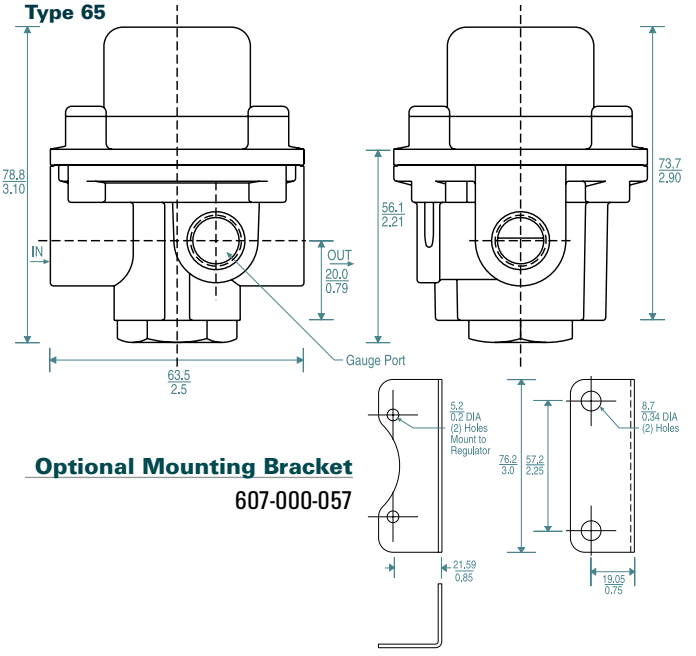

Optional Mounting Bracket

607-000-057

Type 60: Regulated Pressure VS. Flow

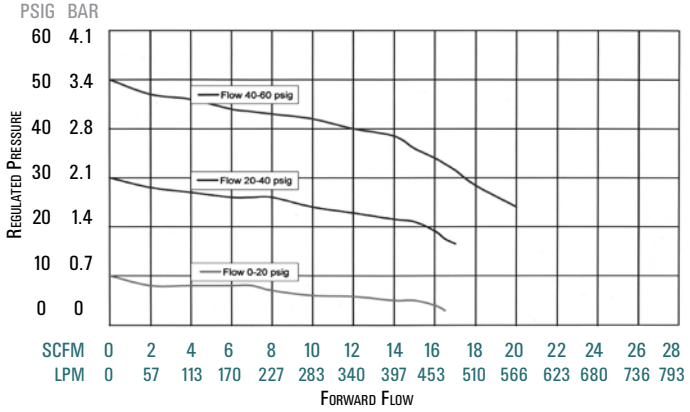

Type 65: Regulated Pressure VS. Flow

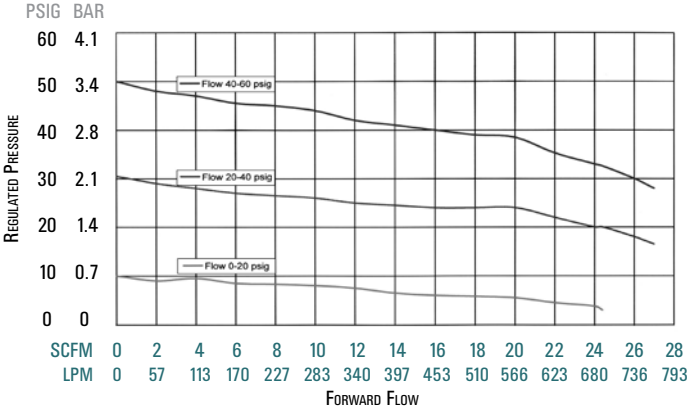

Type 60 and Type 65 Ordering Information

	Part Number	Port Size (NPT)	Set Point Range	
			BAR	PSIG
Type 60	960-070-000	1/4	0-1.4	0-20
	960-109-000		1.4-2.8	20-40
	960-110-000		2.8-4.1	40-60
Type 65	960-071-000	1/4	0-1.4	0-20
	960-150-000		1.4-2.8	20-40
	960-151-000		2.8-4.1	40-60

NOTE: Because the Types 60 and 65 are preset at the factory, it is necessary to provide the supply pressure and preset pressure setting when ordering.

Type 60 and Type 65 Option Ordering Matrix

Replace last three digits of part number with digits from table below.

Option		1	2	4	5	7	8	10	11
1	Fluorocarbon Pintle	001	021	041	051	071	081	101	111
2	Non-Relieving		002	042	052	072	082		112
4	5 Micron Filter (Type 60 only)			004	054	074	084	104	114
5	Epoxy Finish				005	075	085	105	115
7	Mounting Bracket					007	087	107	117
8	Pressure Gauge						008	108	118
10	Soft Relief Seat							010	110
11	Fluorocarbon Diaphragm								011

Options and Accessories:

Fluorocarbon Pintle

A special elastomeric pintle used where elements in the supply air, such as flame retardant synthetic lubricants, are particularly destructive to ordinary pintle material.

Non-Relieving

Used in applications where it is desirable to relieve pressure downstream of the regulator, for some constant flow applications, and where the gas flowing through the regulator must not escape at the regulator. Non-relieving regulators should not be used for low or no flow applications.

5 Micron Filter

Replaces the 40 micron filter supplied with the standard Type 60 for more complete air filtration. P/N 677-000-002

Corrosive Resistant Epoxy Finish

An epoxy paint applied to the body, bonnet and dripwell of the regulator exterior surfaces to provide increased corrosion resistance.

Mounting Bracket

Steel (dichromate finish) bracket for side mounting. P/N 607-000-057

Pressure Gauge

Dual scale 2 in. (50.8 mm) gauges.

When specified with a regulator, the correct range will be supplied. (NPT versions only)

Soft Relief Seat

Used in applications where it is desirable to reduce the standard bleed rate from 6 SCFH (2.83 LPM) to less than 0.1 SCFH (0.05 LPM).

Fluorocarbon Diaphragm

Diaphragm as well as all seals are made of fluorocarbon elastomer to prevent deterioration from elements in the air supply, such as flame retardant synthetic lubricants normally destructive to standard Nitrile material.

To order BSPT add "BSPT" to end of part number.



The Type 65 small stature makes it ideal for compact applications



Type 70
High Flow Pressure Regulator

Features

- High flow capacity - Up to 80 SCFM (2266 LPM)
- Responds quickly to minute changes in downstream pressure
- Dampening action of aspirator tube maintains downstream pressure
- Balanced supply valve minimizes the effect of supply pressure changes
- Bellofram's Buna-N and polyester rolling diaphragms are designed to give millions of cycles
- Honking and buzzing eliminated by action of integral baffle and aspirator tube
- Stack up construction can be disassembled and serviced without removal from air line



Type 70 & 70BP
Pressure Regulator Series

Type 70BP
High Flow Back Pressure Regulator

Features

- High flow Capacity - Up to 50 SCFM (1400 LPM)
- Responds quickly to minute changes in upstream pressure
- Bellofram's Buna-N and polyester rolling diaphragms are designed to give millions of cycles
- Stack up construction can be disassembled and serviced without removal from air line

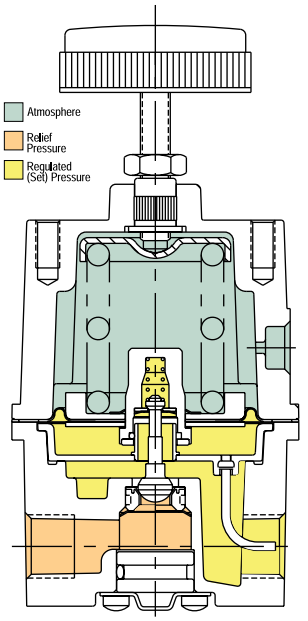

Type 70 Description

The Type 70 Regulator is specifically designed for applications that require substantial flow capacity and accurate pressure controls. Flows of 80 SCFM (2250 LPM) can be attained.

Downstream pressure can be set within 0.25 in. (6.3mm) of water column and is accurately maintained under varying flow conditions with the help of an aspirator tube which adjusts the air supply in accordance with the flow velocity. A balanced supply valve, utilizing a rolling diaphragm, makes the regulator virtually immune to changes in supply pressure.

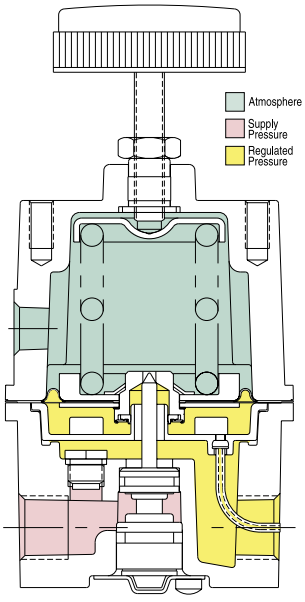

The Type 70 has a rugged precision die cast aluminum housing, and is pressure-tested and chromate-treated for internal corrosion resistance. The regulator housing is finished with vinyl paint which resists scratching, weathering and other physical abuse.



Type 70BP Description

The Type 70 Back Pressure Regulator functions as a high flow, high precision pneumatic relief valve with an adjustable setpoint. The Type 70BP can be used in place of a standard relief valve to improve pressure control while maintaining protection against over pressurization, as in supply pressure lines to instruments and other control devices.

It is most often used in conjunction with a diaphragm-operated valve and bleed orifice as a compressor controller. Excess compressor pressure is relieved through the regulator to actuate the intake restricting valve. When the regulator is shut off, downstream air escapes through the bleed orifice, allowing the restricting valve to open.

Contact Us About NACE Compatible T70 Regulator "No Yellow Metals"



	Type 70	Type 70BP
Sensitivity	1/4" (6.4 mm) Water Column	1/8" (3.2 mm) Water Column
Flow Capacity	40 (1113 LPM) 50 (1416 LPM) or 80 SCFM (2266 LPM)	50 SCFM (1416 LPM)
Effect of Supply Pressure variation (25 psig) on Outlet Pressure	< 0.025 PSIG (1.7 BAR)	N/A
Exhaust Capacity (5 above psig 20 psig set point)	4 SCFM (113 LPM)	N/A
Maximum Supply Pressure	250 PSIG (17.2 BAR)	250 PSIG (17.2 BAR)
Effect of Changes in Flow on Regulated Pressure (100 psig/6.9 BAR Supply)	2.5 PSIG (0.2 BAR) over flow 50 SCFM (1416 LPM) (3/8 NPT, 0-30 PSIG / 0-2.1 BAR range, 15 PSIG / 1 BAR set point)	N/A
Output Pressure Ranges (Type 70)	0-2 PSIG (0-0.1 BAR) 0-10 PSIG (0-0.7 BAR) 0-30 PSIG (0-2.1 BAR) 1-60 PSIG (0.1-4.1 BAR) 2-150 PSIG (0.1-10.3 BAR) 3-200 PSIG (0.2-13.8 BAR)	N/A
Set Point Ranges (Type 70BP)	N/A	0-2 PSIG (0-0.1 BAR) 0-10 PSIG (0-0.7 BAR) 0-30 PSIG (0-2.1 BAR) 0-60 PSIG (0-4.1 BAR) 0-150 PSIG (0-10.3 BAR)
Total Air Consumption @ Maximum Output	from 1.0 to 12.5 SCFH (0.5-6 LPM)	N/A
Temperature Range	-40˚ to 200˚F (-40˚ to 93˚C)	-40˚ to 200˚F (-40˚ to 93˚C)
Port Size	1/4, 3/8, 1/2 NPT, BSPT	1/4, 3/8, 1/2 NPT, BSPT
Materials of Construction	Body: Diecast aluminum with vinyl paint Adjusting Screw: Plated steel Trim: Plated steel, brass, acetal resin Diaphragm: Buna-N with polyester fabric Knob: Phenolic plastic Spring: Music wire	Body: Diecast aluminum with vinyl paint Adjusting Screw: Plated steel Trim: Acetal, brass, plated steel, nitrile Diaphragm: Buna-N with polyester fabric Knob: Phenolic plastic Spring: Music wire
Size	3.0" X 3.0" X 6.0" (76 X 76 X 152 mm)	3.0" X 3.0" X 6.0" (76 X 76 X 152 mm)
Weight	1.41 lb. (0.6 kg)	1.5 lb. (0.7 kg)
Preset Pressure	No	No
Tamper Resistant Cover	Yes	Yes
Mounting	Pipe, panel, or bracket	Pipe, panel, or bracket

Type 70 and 70BP Dimensional Drawings

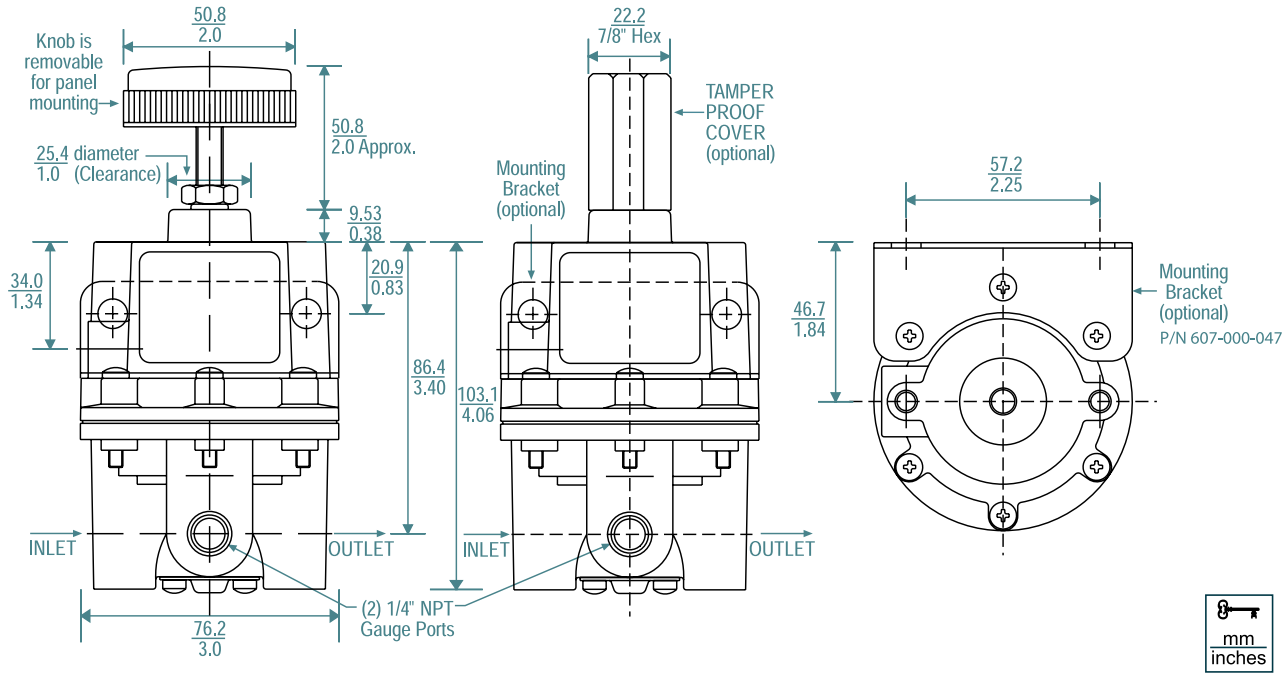

Type 70: Regulated Pressure VS. Flow

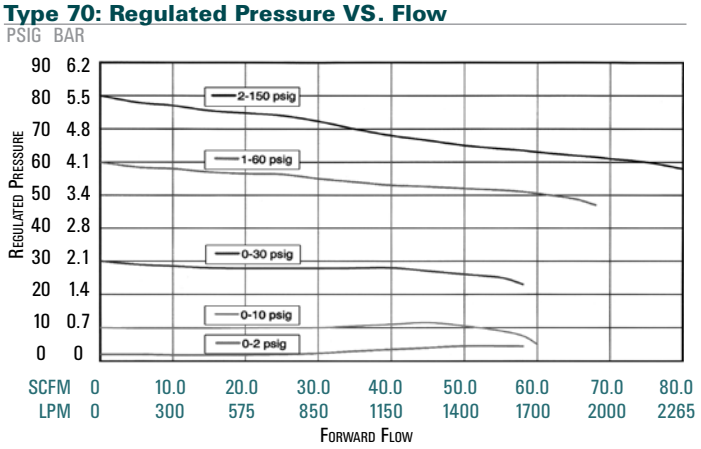

Type 70BP: Regulated Pressure VS. Flow

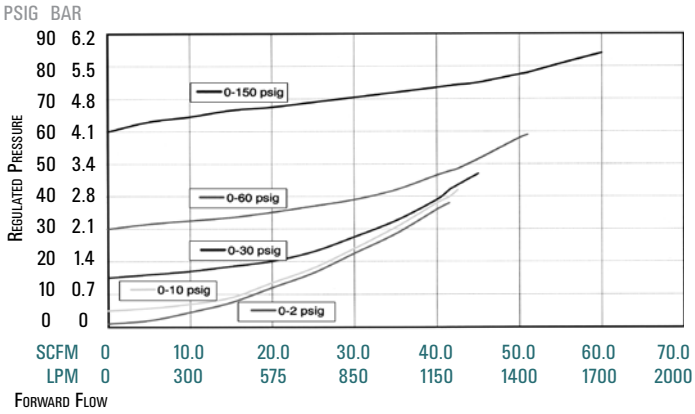

Type 70 and 70BP Ordering Information

	Part Number	Port Size (NPT)	Set Point Range BAR	Set Point Range PSIG
T70	960-129-000	1/4	0-0.1	0-2
	960-174-000	3/8	0-0.1	0-2
	960-162-000	1/2	0-0.1	0-2
	960-130-000	1/4	0-0.7	0-10
	960-131-000	3/8	0-0.7	0-10
	960-163-000	1/2	0-0.7	0-10
	960-089-000	3/8	0-2.1	0-30
	960-090-000	1/4	0-2.1	0-30
	960-159-000	1/2	0-2.1	0-30
	960-091-000	3/8	0.1-4.1	1-60
	960-092-000	1/4	0.1-4.1	1-60
	960-160-000	1/2	0.1-4.1	1-60
	960-093-000	3/8	0.1-10.3	2-150
	960-094-000	1/4	0.1-10.3	2-150
	960-161-000	1/2	0.1-10.3	2-150
	960-152-000	1/4	0.2-13.8	3-200
	960-153-000	3/8	0.2-13.8	3-200
	960-164-000	1/2	0.2-13.8	3-200
T70BP	960-191-000	1/4	0-0.1	0-2
	960-192-000	3/8	0-0.1	0-2
	960-193-000	1/2	0-0.1	0-2
	960-194-000	1/4	0-0.7	0-10
	960-195-000	3/8	0-0.7	0-10
	960-196-000	1/2	0-0.7	0-10
	960-197-000	1/4	0-2.1	0-30
	960-198-000	3/8	0-2.1	0-30
	960-199-000	1/2	0-2.1	0-30
	960-200-000	1/4	0-4.1	0-60
	960-201-000	3/8	0-4.1	0-60
	960-202-000	1/2	0-4.1	0-60
	960-203-000	1/4	0-10.3	0-150
	960-204-000	3/8	0-10.3	0-150
	960-205-000	1/2	0-10.3	0-150

Options

	• = option is available s = option is standard	TYPE 70	TYPE 70BP
2	Non-Relieving	•	
3	Knob	s	s
	Sq. Head Adj. Screw	•	•
5	Epoxy Coating	•	•
6	Tapped Vent	•	
7	Mounting Bracket	•	•
8	Pressure Gauge	•	•
9	Tamper Resistant Cover	•	•
10	Low Bleed	•	
11	Check Valve	•	

Type 70 and 70BP Option Ordering Matrix

Replace last three digits of part number with digits from table below.

Option		2	3	5	6	7	8	9	10	11
2	Non-Relieving	002	032	052	062	072	082	092		112
3	Sq. Head Adj. Screw		003	053	063	073	083		103	113
5	Epoxy Finish			005	065	075	085	095	105	115
6	Tapped Vent				006	076	086	096	106	116
7	Mounting Bracket					007	087	097	107	117
8	Pressure Gauge						008	098	108	118
9	Tamper-Resistant Cover							009	109	119
10	Low Bleed								010	110
11	Check Valve									011

Options and Accessories

Non-Relieving

Used in applications where it is desirable to relieve pressure downstream of the regulator, for some constant flow applications, and where the gas flowing through the regulator must not escape at the regulator. Non-relieving regulators should not be used for low or no flow applications.

Corrosive Resistant Epoxy Finish

An epoxy paint applied to the body of the regulator exterior surfaces to provide increased corrosion resistance.

Tapped Vent

Allows installation of plumbing to capture exhaust air.

Mounting Bracket

Steel (dichromate finish) bracket for side mounting.

Pressure Gauge

Dual scale 2 in. (50.8 mm) gauges. Ranges include 0-30 PSIG (0-200 kPa), 0-60 PSIG (0-400 kPa), 0-100 PSIG (0-700 kPa) and 0-160 PSIG (0-1100 kPa). When specified with regulator, the correct range will be supplied.

Tamper Resistant Cover

An aluminum tubular cover placed over a slotted head adjusting screw and screwed onto the bonnet of the regulator with a wrench. Prevents ordinary hand adjustments.

Low Bleed

Reduces steady-state air consumption by approximately 50%.

Check Valve

Allows quick dumping of output line pressure through the supply air line when the supply is shut down.

Type 77
Vacuum Regulator Series

Features

- Single-unit control of pressures from 29" Hg vacuum to 150 PSI
- Flow capacity up to 40 SCFM
- Dampening action of aspirator tube maintains stable output pressure
- Output virtually unaffected by changes in supply pressure
- Can be disassembled and serviced without removing from line

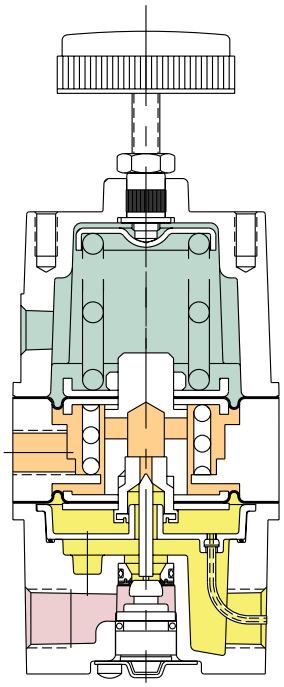

Description

Bellofram's Type 77 Vacuum Regulator incorporates a fixed negative 15 PSIG bias spring to maintain vacuum outputs up to 29" Hg. An adjustable opposing range spring increases controlled pressure outputs up to 150 PSIG.

Output pressure droop under varying downstream flow conditions is minimized by use of an aspirator tube which adjusts the air supply valve opening in accordance with flow velocity. A balanced supply valve, utilizing a reinforced rolling diaphragm, keeps regulator output virtually immune to changes in supply pressure. Stack-up construction makes the Type 77 easily serviceable, without removing it from the air line.

Applications

The Type 77 provides precise control in subatmospheric pressure applications. Specific uses include sample collecting systems, air quality monitoring, parts coating operations, and other industrial functions requiring controlled system pressure from 29" Hg vacuum to 150 PSIG.

The regulator may be installed either upstream or downstream from the vacuum pump. Upstream installation (Figure 1) is preferred when rapid evacuation of a vessel or system is required, because the exhaust capacity of the pump is normally greater than that of the regulator. In all other applications, the regulator can be located between the pump and the vessel. (Figure 2)





	TYPE 77
Sensitivity	1/2" (1.3 cm) Water Column
Flow Capacity	2.5 SCFM (71 L/M) @ 29" Hg (740 mm Hg) Vacuum 40 SCFM (1130 L/M) @ 100 PSIG (6.9 BAR) supply, 20 PSIG (1.4 BAR) output
Effect of Supply Pressure variation (25 psig/1.7 BAR) on Outlet Pressure	Less than 0.1 PSIG (0.01 BAR)
Exhaust Capacity@ 5 psig (0.34 BAR) above setpoint	4 SCFM (113 LPM)
Maximum Supply Pressure	250 PSIG (17.2 BAR)
Ambient Temperature Limits	-40 to 200˚F (-40 to 93˚C)
Output Pressure Ranges	Vacuum to 2 PSIG (0.1 BAR) Vacuum to 10 PSIG (0.7 BAR) Vacuum to 30 PSIG (2.1 BAR) Vacuum to 100 PSIG (6.9 BAR) Vacuum to 150 PSIG (10.3 BAR)
Total Air Consumption @ Maximum Output	6 SCFH (2.8 LPM)
Port Size	1/4 NPT, 3/8 NPT, 1/4 BSPT, 3/8 BSPT
Materials of Construction	Body: Diecast Aluminum with Vinyl Paint Trim: Stainless steel, Brass, Plated steel, Acetal and Buna-N Diaphragm: Buna-N with Polyester Fabric Knob: Phenolic Plastic Spring: Music wire
Mounting Options	Pipe, Panel or Bracket

Type 77 Ordering Information

T70	Range		Part Number	
	BAR	PSIG	1/4 NPT Port	3/8 NPT Port
Vac. to	0.1	2	960-500-000	960-505-000
Vac. to	0.7	10	960-501-000	960-506-000
Vac. to	2.1	30	960-502-000	960-507-000
Vac. to	6.9	100	960-503-000	960-508-000
Vac. to	10.3	150	960-504-000	960-509-000

Type 77 Option Ordering Matrix

Replace last three digits of part number with digits from table below.

Option		5	7	8
5	Epoxy Finish	005	075	085
7	Mounting Bracket		007	087
8	Pressure Gauge			008

To order BSPT threads (including the gauge port) add "BSPT" to end of part number.

Regulator Options and Accessories

Corrosive Resistant Epoxy Finish

An epoxy paint applied to the body and bonnet of the regulator exterior surfaces to provide increased corrosion resistance.

Mounting Bracket

Steel (dichromate finish) bracket for side mounting.

Pressure Gauge

Dual scale 2.5 in. (63 mm) gauges. Ranges include 30" Hg – 15 PSIG (-100 to 100 kPa), 30" Hg – 60 PSIG (-100 to 400 kPa), and 30" Hg – 150 PSIG (-100 to 1100 kPa). When specified with regulator, the correct range will be supplied. For NPT versions only.

Figure 1

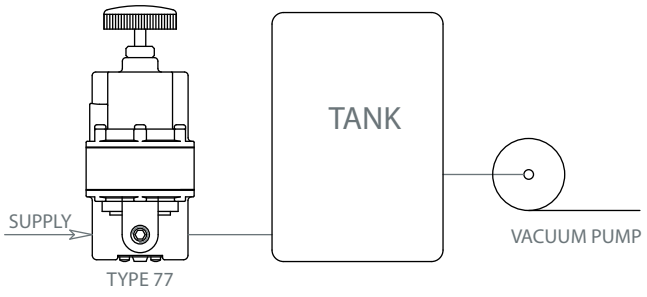

Figure 2

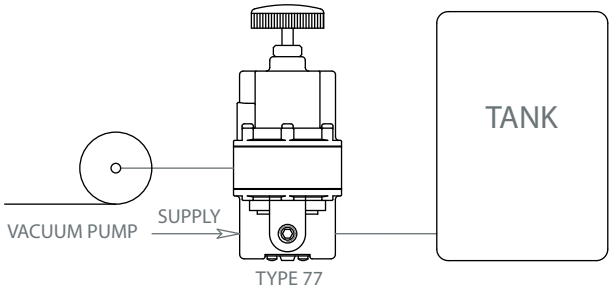

Type 77 Dimensional Drawing

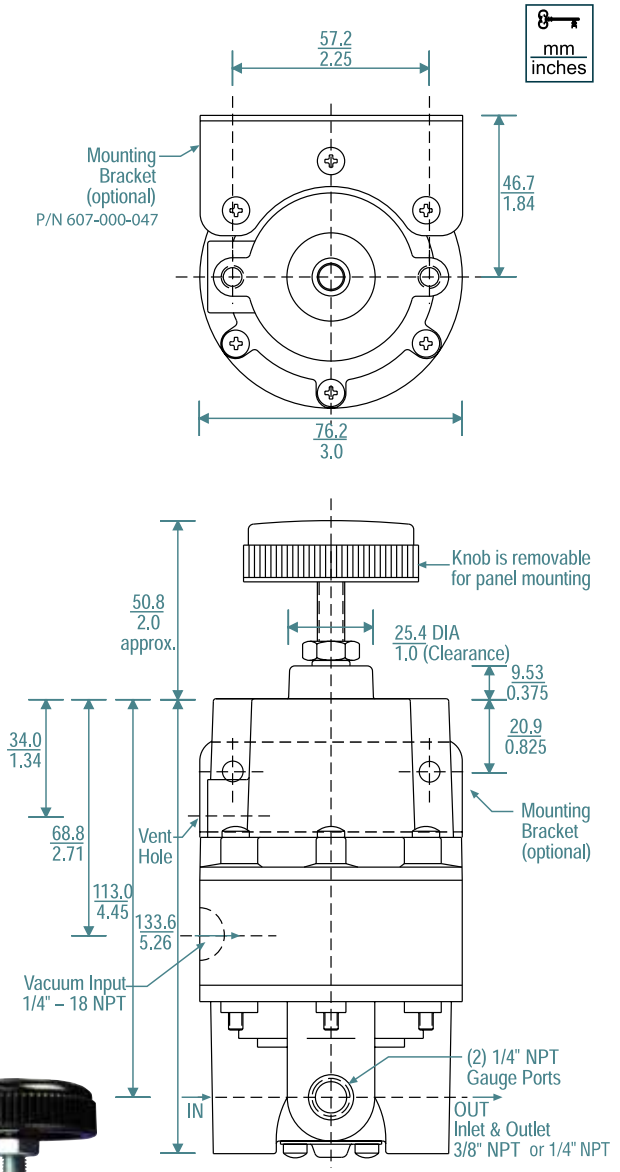



Type 78

High Flow Air Regulator Series

Features

- Bellofram Rolling Diaphragm Provides Low-Friction, Long Life Service
- Available in 3/8, 1/2, 3/4, and 1 NPT and BSPT
- Output Gauge Ports are 1/4 NPT
- Options: Low-bleed, Non-relieving, Tamper Resistant Cover, Square-head Adjustment, T-handle Adjustment, Epoxy Paint, Tapped Supply Gauge Port, and Tapped Exhaust
- Mounting Brackets and Repair Kits Available
- Output Ranges are 0-2, 0-10, 0-30, 0-60, 0-125 PSIG 0-0.1, 0-0.7, 0-2.1, 0-4.1, 0-8.6 BAR
- Maximum Supply Pressure is Rated at 400 PSIG / 27.6 BAR
- Flow rates of well over 200 SCFM

Description

The Type 78 regulator is specifically designed for applications that require large flow capability and accurate pressure control. This regulator offers low droop, high accuracy, and fine adjustment sensitivity. The use of a Bellofram rolling diaphragm provides greater sensitivity and improved accuracy. The Type 78 offers a balanced pintle, which minimizes output pressure changes caused by fluctuations in supply pressure. Careful design and quality materials throughout assure long, trouble-free operation. The rugged die-cast zinc and aluminum housings are pressure tested to assure safe operation, and are designed to withstand harsh and abusive environments. This durability is attributed to a chemical conversion coating of all cast components and a vinyl paint finish.

With a maximum supply pressure of up to 400 PSIG/27.6 BAR and output ranges up to 125 PSIG/8.6 BAR, the Type 78 can achieve flow rates of well over 200 SCFM. It can be panel or pipe mounted.



Operation

Marsh Bellofram's Type 78 is a direct acting, diaphragm-operated regulator. Once set to a desired output pressure, this precision regulator maintains the setting permanently. The range spring, which has been compressed by the adjustment knob, causes the pintle to move downward, opening the supply valve and allowing air flow. The pressure builds up against the control diaphragm until the supply valve closes. This is the equilibrium or set pressure, which is closely maintained under changes in operating conditions in the following manner:

Downstream Pressure Drop

A drop in downstream pressure reduces the diaphragm pressure force, upsetting the equilibrium condition. This unbalance causes the supply valve to open until the pressure builds up once more to the equilibrium condition.

Downstream Pressure Increase

An increase in downstream pressure acts on the diaphragm, causing the relief seat in the diaphragm assembly to lift and open. The excess pressure is exhausted through the vent port until the output pressure is restored to the set point. The relief valve then closes.

Changes in Forward Flow

Under forward flow conditions, the range spring force is balanced by the diaphragm pressure force, with the supply valve open just enough to maintain the required forward flow. When high flow occurs, a specially designed aspirator helps maintain downstream pressure and compensates for droop.





The Type 78 regulator is specifically designed for applications that require large flow capability and accurate pressure control.

	Type 78
Sensitivity	Less than 1" water column
Flow Capacity	See Performance Curves
Exhaust Capacity	14 SCFM at 5 PSI / 0.3 BAR above 20 PSIG / 1.4 BAR set point (0-30 PSIG / 0-2.1 BAR range unit)
Air Consumption	less than 12 SCFH at 125 PSIG / 8.6 BAR output pressure
Effect of Supply Pressure on Regulated Pressure	less than ± 0.35 PSIG / 0.02 BAR for a supply variation of 100 PSIG / 6.9 BAR
Supply Pressure Max	400 PSIG / 27.6 BAR
Weight	Approx. 5 lbs.
Materials of Construction	Body: Die Cast Zinc Bonnet: Die Cast Aluminum Alloy Knob: Phenolic Plastic, Plated Steel Diaphragms: Nitrile Elastomers with Dacron Fabric Other Internal Materials: Brass, Stainless Steel, and Zinc
Mounting Options	Pipe or Panel
Temperature Rating	-40˚F (-40˚C) to 200˚F (93˚C)

Options

Low Bleed

Reduces steady-state air consumption by approximately 50%.

Non-relieving

Used in applications where it is desirable to relieve pressure downstream of the regulator, for some constant flow applications and where the gas flowing through the regulator must not escape at the regulator. Non-relieving regulators should not be used for low or no flow applications.

Handle Options

"T" handle or square head.

Epoxy Paint

A gray epoxy finish applied to the body of the regulator to provide greater resistance to corrosive environments.

Tapped Vent (Exhaust)

1/4 NPT tapped port to allow for installation of plumbing to capture exhaust air.

Tapped Supply Gauge Port

1/4 NPT tapped port is offered as a pressure tap for monitoring the inlet or upstream pressure supplied to the regulator.

Tamper Resistant Cover

An aluminum tubular cover placed over a slotted head adjusting screw and screwed on the bonnet of the regulator with a wrench, prevents ordinary hand adjustments.

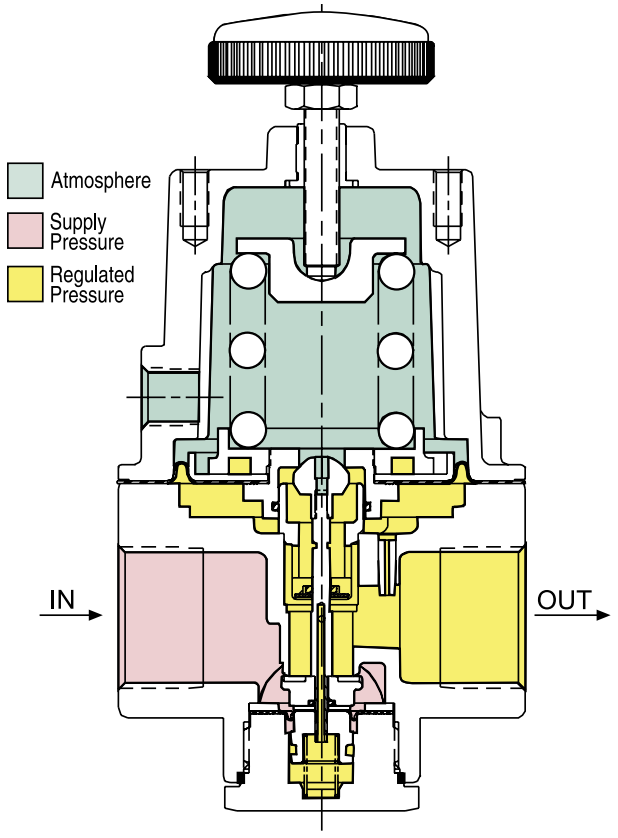

Type 78 Typical Performance Curves

Droop Curve 3/8 NPT

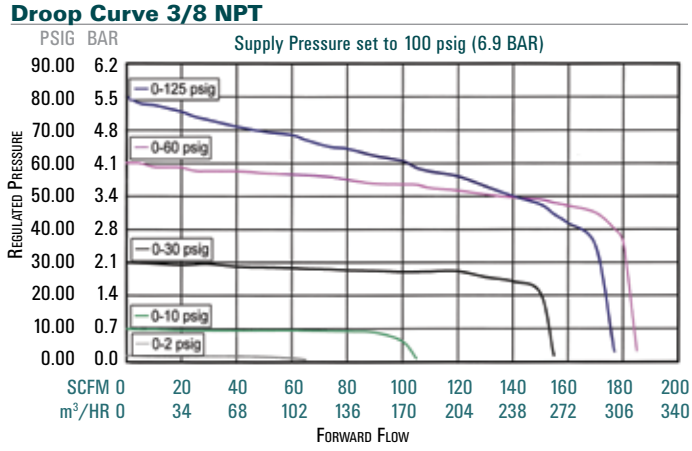

Droop Curve 1/2 NPT

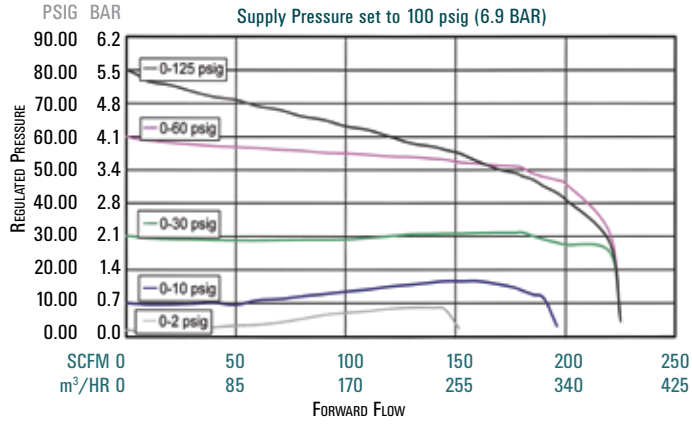

Droop Curve 3/4 NPT

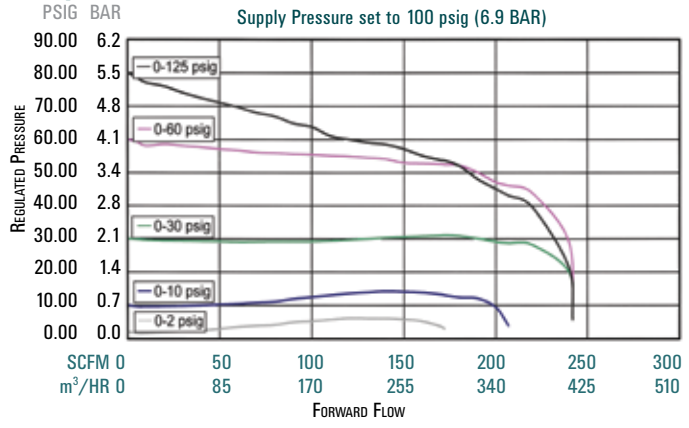

Droop Curve 1 NPT

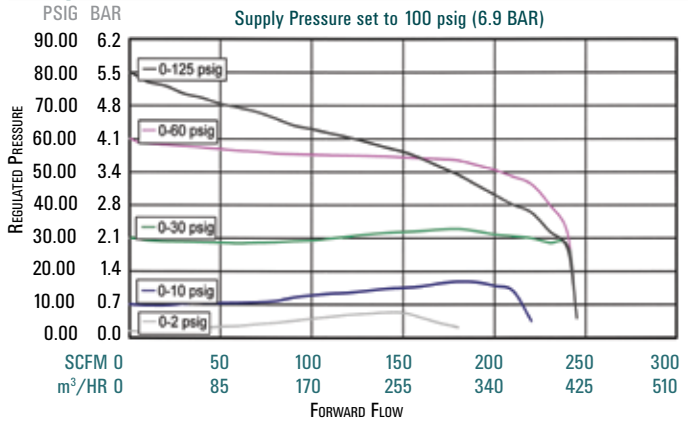



Type 78 Ordering Information

	Part Number	Port Size (NPT)	Range*	
			BAR	PSIG
T78	960-326-000	3/8	0-2.1	0-30
	960-327-000	1/2	0-2.1	0-30
	960-328-000	3/4	0-2.1	0-30
	960-329-000	1	0-2.1	0-30
	960-330-000	3/8	0-4.1	0-60
	960-331-000	1/2	0-4.1	0-60
	960-332-000	3/4	0-4.1	0-60
	960-333-000	1	0-4.1	0-60
	960-334-000	3/8	0-8.6	0-125
	960-335-000	1/2	0-8.6	0-125
	960-336-000	3/4	0-8.6	0-125
	960-337-000	1	0-8.6	0-125
	960-346-000	3/8	0-0.1	0-2
	960-347-000	1/2	0-0.1	0-2
	960-348-000	3/4	0-0.1	0-2
	960-349-000	1	0-0.1	0-2
	960-350-000	3/8	0-0.7	0-10
	960-351-000	1/2	0-0.7	0-10
	960-352-000	3/4	0-0.7	0-10
	960-353-000	1	0-0.7	0-10

BSPT: British Standard Pipe Threads can by ordered by adding "BSPT" to the end of the part number.

*Although the regulator can be shut off, the recommended operating ranges are between 10% and 100% of the adjustment range.

Type 78 Dimensional Drawing

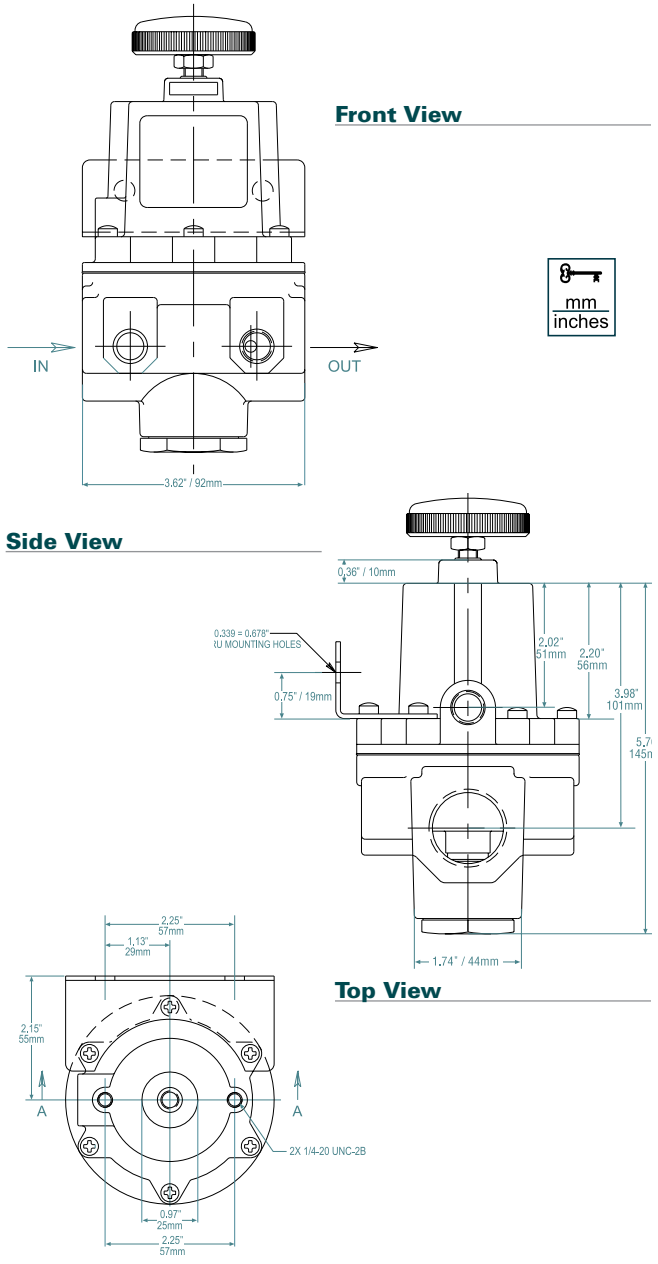

Accessories

Gauges

2" gauge kits are recommended for supply and output.

Mounting Brackets

Zinc plated steel bracket to allow for side or panel mounting.
Part #607-293-000

Repair Kit

Includes control diaphragm and pintle assembly. Part #971-157-000

Type 78 Option Ordering Matrix

Replace last three digits of part number with digits from table below.

Option		1	2	3	4	5	6	7	8
1	Low Bleed	001		031	041	051	061	071	081
2	Non-Relieving		002	032	042	052	062	072	082
3	Sq. head Adj. Screw			003		053	063	073	
4	"T" Handle				004	054	064	074	
5	Epoxy Finish					005	065	075	085
6	Tapped Vent						006	076	086
7	Tapped Supply Port							007	087
8	Tamper Resistant Cover								008

Type 91

Subminiature Regulator Series

Features

- Designed for applications with limited space and for low flow or dead end service
- Small package size and lightweight construction
- Standard or low bleed versions available
- Corrosion resistant anodized aluminum exterior
- Excellent stability and repeatability
- Self relieving
- Low cost

Type 91

The Type 91 Subminiature Regulator is a compact, low-cost unit which operates in pressure ranges up to 100 PSI, with a maximum supply pressure of 250 PSI. It provides dependable reliability and accuracy for low flow or dead end applications, but is not designed for critical flow applications. The Type 91 subminiature regulator is available with a corrosion resistant anodized aluminum body and bonnet or with a brass body and bonnet. Both come standard with a fluorocarbon diaphragm.

Type 91 Low Bleed

The Type 91 low bleed version is designed for applications where low air consumption is required. The Type 91 is ideal for applications where space is limited and for dead ended/low flow service. Such applications include ink control on printing presses, panel loading applications, hand-held analyzers and calibration equipment, small cylinder operations, and all types of instrumentation applications. It can be through panel mounted or, due to its lightweight, pipe mounted. A slotted adjustment screw is available for precision control.



	Type 91	Type 91 Low Bleed
Effect of Supply Pressure Variation (25 psig) on Outlet Pressure	< 0.25 PSIG (17.02 mBAR)	< 0.5 PSIG (34.5 mBAR)
Exhaust Capacity (5 psig above 20 psig set point)	0.1–0.3 SCFM Typical (2.8-8.5 LPM)	0.1–0.3 SCFM Typical (2.8-8.5 LPM)
Max. Supply Pressure	250 PSIG (17.2 BAR)	150 PSIG (10.3 BAR)
Flow Capacity at 100 psig (6.9 BAR) Supply and 20 psig (1.4 BAR) Outlet	2.5 SCFM (71 LPM)	1.4 SCFM (40 LPM)
Output Pressure Ranges	0-5 PSIG (0-0.35 BAR) 0-15 PSIG (0-1.0 BAR) 0-30 PSIG (0-2.1 BAR) 0-60 PSIG (0-4.1 BAR) 0-100 PSIG (0-6.9 BAR)	0-5 PSIG (0-0.35 BAR) 0-15 PSIG (0-1.0 BAR) 0-30 PSIG (0-2.1 BAR) 0-60 PSIG (0-4.1 BAR) 0-100 PSIG (0-6.9 BAR)
Total Air Consumption @ Max Output	3 SCFH (1.42 LPM)	0.3 SCFH (0.14 LPM)
Port Size	1/16 NPT / 5mm	1/16 NPT / 5mm
Materials of Construction	Body: Anodized Aluminum Adjusting Screw: Plated Steel Trim: Brass, Acetal Diaphragm: Fluorocarbon with Polyester Fabric Knob: Acetal Resin Spring: Music Wire	Body: Anodized Aluminum Adjusting Screw: Plated Steel Trim: Brass, Acetal Diaphragm: Fluorocarbon with Polyester Fabric Knob: Acetal Resin Spring: Music Wire
Size and Weight	0.875" X 0.875" X 3.33" (22.2 X 22.2 X 84.6 mm) 2.2 oz. (0.06 kg)	0.875" X 0.875" X 3.33" (22.2 X 22.2 X 84.6 mm) 2.2 oz. (0.06 kg)
Mounting Options	Pipe or Panel	Pipe or Panel

Type 91 Dimensional Drawing

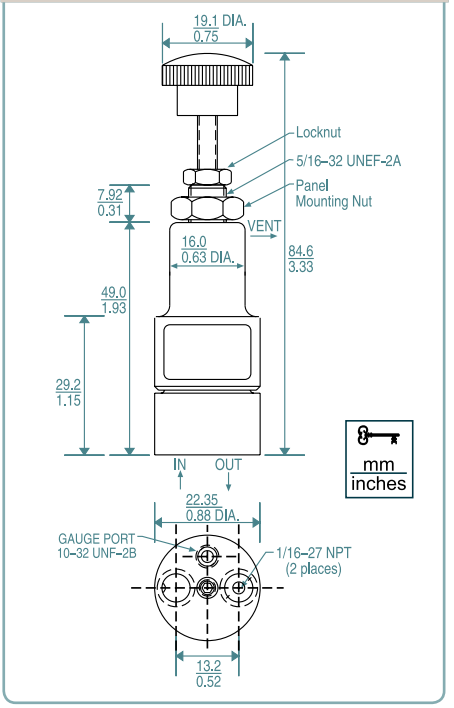

Type 91 and 91 Low Bleed Ordering Information

	Part Number	Port Size (NPT)	Set Point Range BAR	Set Point Range PSIG
Type 91	960-240-000	1/16	0-0.3	0-5
	960-236-000		0-1.0	0-15
	960-237-000		0-2.1	0-30
	960-238-000		0-4.1	0-60
	960-239-000		0-6.9	0-100
	962-036-000	5mm	0-0.3	0-5
	962-083-000		0-1.0	0-15
	962-033-000		0-2.1	0-30
	962-034-000		0-4.1	0-60
	962-035-000		0-6.9	0-100

Type 91 Option Ordering Matrix

Replace last three digits of part number with digits from table below.

Option	Non-Relieving	Slotted Adj. Screw	Low Bleed
Non Relieving	002	032	–
Slotted Adj. Screw		003	103
Low Bleed			010

Type 91 Barbed Fittings

Port	Size	Part Number
In/Out Port	1/16 NPT	622-000-007
Gauge Port	10 - 32 UNF	622-000-031

Type 92
Subminiature Regulator Series

Features

- Designed for applications with limited space and for low flow or dead end service
- Small package size and lightweight construction
- Corrosion resistant anodized aluminum exterior
- Excellent stability and repeatability
- Self relieving
- Low cost

With the new Type 92, Marsh Bellofram has created a subminiature regulator with a true rolling diaphragm design. Most subminiature regulators utilize a flat diaphragm, which in this small of a regulator causes excessive droop and low stability. By utilizing a larger diameter rolling diaphragm, the Type 92 regulator offers a more sensitive regulator with excellent stability and significantly less droop.

The Type 92 Subminiature Regulator is a compact, low-cost unit which operates in pressure ranges up to 100 PSI, with a maximum supply pressure of 150 PSI. It provides dependable reliability and accuracy for low flow or dead end applications. The Type 92 subminiature regulator is available with a corrosion resistant anodized aluminum body and bonnet. Comes standard with a fluorocarbon diaphragm.



	Type 92
Effect of Supply Pressure Variation (25 PSIG) on Outlet Pressure	< 0.5 PSIG (35.5 mBAR)
Exhaust Capacity (5 psig above 20 PSIG set point)	0.1-0.3 SCFM Typical (2.8-8.5 LPM)
Maximum Supply Pressure	150 PSIG (10.3 BAR)
Flow Capacity at 100 PSIG (6.9 BAR) Supply and 20 psig (1.4 BAR) Outlet	5 SCFM (141 LPM)
Standard Output Pressure Ranges	0-5 PSIG (0-0.35 BAR) 0-15 PSIG (0-1.0 BAR) 0-30 PSIG (0-2.1 BAR) 0-60 PSIG (0-4.1 BAR) 0-100 PSIG (0-6.9 BAR)
Total Air Consumption at Max Output Pressure	0.3 SCFH (0.14 SLPM)
Operating Temperature Range	0 - +160˚F (-18˚- 71˚C)
Port Size	1/16 NPT - Side and Bottom Ports
Materials of Construction	Body: Anodized Aluminum Bonnet: Anodized Aluminum Trim: Acetal, Brass, Stainless Steel Diaphragm: Fluorocarbon with Polyester Fabric Knob: Acetal Resin Spring: Stainless Steel, Music Wire
Size and Weight	1.19" X 1.19" X 3.55" (30.2 X 30.2 X 90.2 mm) 2.8 oz. (0.08 kg)
Mounting Options	Pipe or Panel

Type 92 Dimensional Drawing

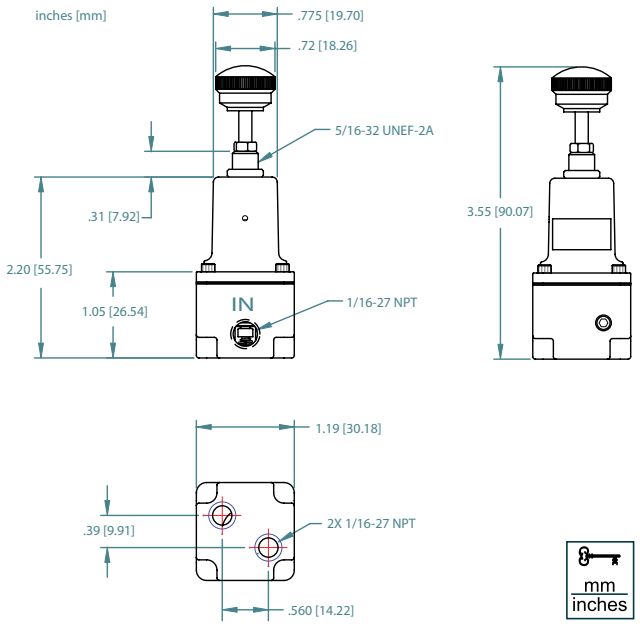

Type 92 Ordering Information

	Part Number	Port Size (NPT)	Set Point Range BAR	Set Point Range PSIG
Type 92	960-540-000	1/16	0-0.3	0-5
	960-541-000		0-1.0	0-15
	960-542-000		0-2.1	0-30
	960-543-000		0-4.1	0-60
	960-544-000		0-6.9	0-100

Type 92 Option Ordering Matrix

Replace last three digits of part number with digits from table below.

Option	Non- Relieving	Slotted Adj. Screw
Non-Relieving	002	032
Slotted Adj. Screw		003

Type 92 Barbed Fittings

Port	Size	Part Number
In/Out Port	1/16 NPT	622-000-007
Gauge Port	10 - 32 UNF	622-000-031

let Us Design One for you!

Custom Designed Regulators

- Specialized in meeting OEM Design Requirements
- Forward Flows to 2000 SCFM
- Supply Pressures to 5500 psi / 379.2 BAR
- Vacuum to 600 psi / 41.2 BAR Regulated Output

Contact the Applications Engineers at Marsh Bellofram

800-727-5646 • FAX: (304) 387-4417



Visit Us Online

www.marshbellofram.com

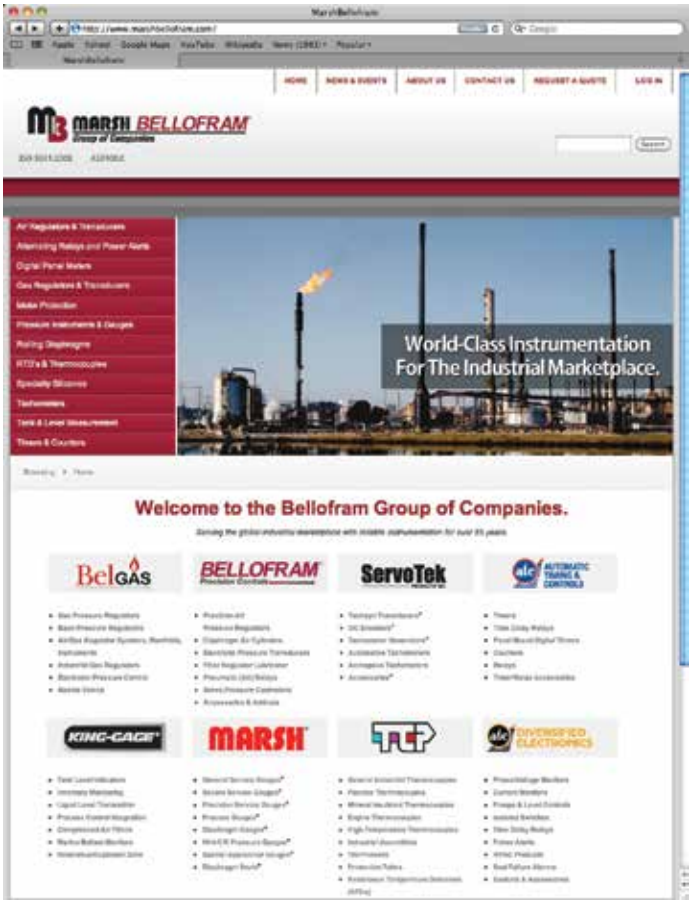



www.marshbellofram.com/bellofram-pcd